National Aeronautics and
Space Administration

HLS-IRD-001
Initial Release (DRAFT)
RELEASE DATE: September 26, 2019

Gateway Visiting Vehicle Interface Definition Document: Human Landing System Interface Requirements Annex

Date: September 26,2019
Revision: Draft

TABLE OF CONTENTS

1 SCOPE 4
1.1 Introduction 4
1.2 Program Description 4
1.3 Roles and Responsibilities 4
1.4 Interface Configuration Management 4
2 APPLICABLE DOCUMENTS 5
2.1 Government Documents 5
2.2 Order of Precedence 5
3 INTERFACE DEFINITION AND DESCRIPTION 6
3.1 HLS to Gateway Characteristics and Functions 6
3.1.1 Interface Description 6
3.1.1.1 Human Landing System Description 7
3.1.1.2 Gateway Description 7
3.1.1.3 Human Landing System to Gateway Interface Plane Description 7
3.1.1.4 Human Landing System Interface Functions 7
3.1.1.5 Gateway Interface Functions 7
3.1.2 Interface Responsibilities 8
3.1.3 Engineering Units, Tolerances, and Conversions 8
3.2 Structural and Mechanical Interface Requirements 8
3.3 Loads and Dynamics Interface Requirements 9
3.4 Environmental Control and Life Support Interface Requirements 10
3.5 Electrical Interface Requirements 13
3.5.1 Electrical Power 13
3.5.2 Electromagnetic Compatibility 14
3.6 Communications and Data Handling Interface Requirements 15
3.6.1 Communications and Tracking 15
3.6.2 Command and Data Handling 19
3.7 Performance Interface Requirements 24
3.8 Operations Interface Requirements 24
3.9 Safety Interface Requirements 31
3.9.1 Natural and Induced Environments 31
3.9.2 Crew Human Interface 32
3.10 Reliability Interface Requirements 32
3.11 Maintainability Interface Requirements 32
4 INTERFACE REQUIREMENTS VERIFICATION 32
4.1 Responsibilities 33
4.2 Terminology 33
5 APPENDIX A - ACRONYM LIST 34
6 APPENDIX B - CROSS SECTION IMAGES OF GATEWAY / ORION CONFIGURATION 35

TABLE OF FIGURES

Figure 1- Human Landing System to Gateway Interface Drawing 6

1 SCOPE

1.1 Introduction

This Interface Requirements Document (IRD) serves as an Annex to the Gateway Visiting Vehicle (VV) Interface Definition Document (IDD), GP-10031 (Draft) by defining the Human Landing System (HLS) requirements and verification approach for interfaces between the HLS and the Gateway. The HLS Annex has been designed and tailored to be in concert with the Gateway to Visiting Vehicle IRD allocation of interface requirements to HLS. The detailed design implementation of the HLS to Gateway interfaces in response to this IRD will be controlled in the HLS to Gateway Interface Control Document (ICD).

1.2 Program Description

This document provides interface requirements between the HLS and the Gateway. The document requirement structure is as follows:
A. Section 3.2 contains interface requirements for the HLS side of the interface.
B. Section 4 contains verification methodology, success criteria, and responsibility.

1.3 Roles and Responsibilities

Prior to baseline of this IRD, updates and changes will be managed by the Book Manager, controlled through the appropriate Working Group(s) and /or Cross Program Panel / Board. Issues are elevated to the Cross Program Integration Team (CPIT) and if need be Program Managers as necessary for resolution. The process to baseline the IRD and change control thereafter is documented in HLS-PLAN-004, HLS Configuration and Data Management Plan.

1.4 Interface Configuration Management

Each interface requirement in this document is uniquely numbered and identified by the presence of a tag of the form "[L2-HLS-GW-####]" at the beginning of the requirement statement. The "####" portion of the identifier is a unique number assigned by the Dynamic Object Oriented Requirements System (DOORS) requirements database. The complete identifier is tagged to the requirement and used to track changes to the requirement in the DOORS requirements database.
The convention used in this document for requirements is as follows:

> *Shall -- used to indicate a requirement which must be implemented and its implementation verified;*
> *Should -- used to indicate a goal which must be addressed by the design but is not formally verified;*
> *Will -- used to indicate a statement of fact and is not verified.*

In some cases the values of quantities included in a requirement have not been determined and are designated as "to be resolved" (TBR), "to be determined" (TBD) or "to be supplied" (TBS). Where approximate values of such quantities are known and provide useful guides for development, these are shown along with the TBR

notation. Where no value is yet known, a TBD is included. Where a value is known, but has not been supplied to the IRD Book Manager, a TBS is included.

2 APPLICABLE DOCUMENTS

2.1 Government Documents

The documents listed in this section are referenced in content of the IRD. While every effort has been made to ensure the completeness of this list, document users are cautioned that they must meet all specified requirements of documents cited within the IRD whether or not they are listed here in Section 2.1.

Document #	**Document Title**
ARINC 664-p7	Avionics Full-Duplex Switched Ethernet
ASHRAE-62	American Society of Heating, Refrigerating and Air-Conditioning Engineers Standard, Ventilation for Acceptable Indoor Air Quality
CCSDS 133.1-B-2	Encapsulation Service
CCSDS 702.1-B-1	IP over CCSDS Space Links
CCSDS 732.0-B-3	AOS Space Data Link Protocol, September 2015
CCSDS 734.2-B-1	CCSDS Bundle Protocol Specification
DSG-RQMT-020	Gateway Electrical Power Quality Specification Requirements
DSG-SPEC-HTCH-0019	Gateway Program Specification for Hatches
GP 11464 (DSG-RQMT-004)	Gateway Electromagnetic Environmental Effects Document
GP 11461 (DSG-RQMT-007)	Gateway Requirements for the Control of Electromagnetic Interference Characteristics of Subsystems and Equipment Document
ICSIS	International Communication System Interoperability Standards, March 2019
IDSS IDD, Rev E	International Docking System Standard Interface Definition Document
IEEE 802.3-2008	1000BaseT Standard
JSC 20584	Spacecraft Maximum Allowable Concentrations for Airborne Contaminants
JSC 62809	Human Rated Spacecraft Pyrotechnic Specification
NASA-STD-4003A	NASA Technical Standard: Electrical Bonding for NASA Launch Vehicles, Spacecraft, Payloads, and Flight Equipment
SAE AS6802	Time-triggered Ethernet

2.2 Order of Precedence

In the event of a conflict between the text of this specification and the references cited herein, the text of this specification takes precedence. Nothing in this specification,

however, supersedes applicable laws and regulations unless a specific exemption has been obtained.

3 INTERFACE DEFINITION AND DESCRIPTION

3.1 HLS to Gateway Characteristics and Functions

3.1.1 Interface Description

The physical and functional interfaces described in this document are depicted at a summary level in Figure 1 - Human Landing System to Gateway Interface Drawing. Each physical and functional interface between HLS and Gateway is shown with an arrow indicating the direction of the interface. No direction or dependencies between system interfaces is implied.

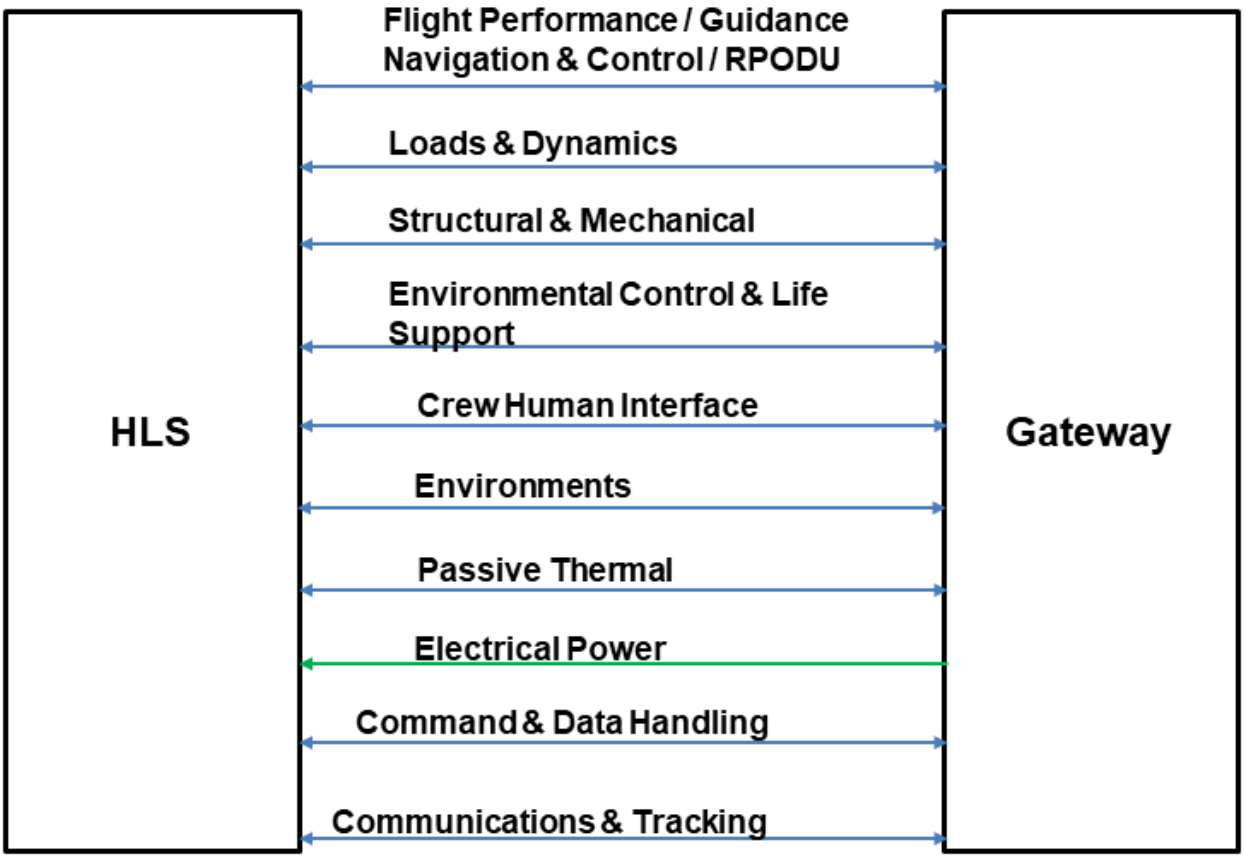

Figure 1- Human Landing System to Gateway Interface Drawing

3.1.1.1 Human Landing System Description

The HLS is a human rated space craft system with the capability to sustainably ferry astronauts and technology demonstrators to and from the surface, yielding new science and material resources – and leveraging the Moon as a proving ground for future Mars missions.

3.1.1.2 Gateway Description

The Deep Space Gateway (Gateway) will serve as a platform to mature necessary short- and long-duration deep space capabilities through the 2020s. It will be placed in a cislunar orbit to better understand crew physiological and psychological well-being, exploration operations protocols, vehicle subsystems, and allow for validation of deep space exploration risk mitigation approaches. It will also serve as a demonstration platform for the integrated testing of Deep Space Transport (DST) subsystems and autonomous operations addressing communications delays, although the delays the DST will experience will be significantly longer in transit to and at Mars vicinity. The Gateway also provides the opportunity to better understand vehicle refurbishment activities and vehicle operations during long durations while the vehicle is uncrewed. The Gateway capability can be evolved depending on mission needs, and though there are various concepts for configuration, current analysis has concluded that the initial Gateway configuration will include a power propulsion element, a habitation capability, an airlock capability to enable Extra-Vehicular Activities (EVAs), logistics resupply capabilities and cargo/sample return/exchange capabilities.

3.1.1.3 Human Landing System to Gateway Interface Plane Description

3.1.1.4 Human Landing System Interface Functions

HLS will support the following functions at the interface to Gateway:
a. Mechanical Attachment
b. Provide Data (Vehicle Health)
c. Receive Commands
d. Provide Passageway/Access
e. Provide Docking/Mating Aids
f. Receive Power
g. Crew Transfer (Ascent Element Only)
h. Return Atmosphere

3.1.1.5 Gateway Interface Functions

Gateway will support the following functions at the interface to HLS:
a. Mechanical Attachment
b. Receive Data (Vehicle Health)
c. Provide Commands
d. Provide Passageway/Access
e. Provide Docking/Mating Aids
f. Provide Power

g. Crew Transfer (Ascent Element Only)
h. Provide Atmosphere

3.1.2 Interface Responsibilities

The HLS Program carries the responsibility for design of the interface requirements imposed on the HLS portion of this interface and the Gateway Program, through the Gateway to Visiting Vehicle IRD, carries the responsibility for designing to the interface requirements imposed on the Gateway portion of this interface.

3.1.3 Engineering Units, Tolerances, and Conversions

Numerical data entered in shall be in International System of Units (SI) (metric) units with applicable tolerances. The equivalent value shall be added in English (inch–pound–second) Parenthesis. Conversions between English and SI units shall be in accordance with ASTM E–380, standard procedure for use of the SI.

3.2 Structural and Mechanical Interface Requirements

This section covers structural and mechanical interfaces including envelopes, coordinate systems, mounting/installation, stowage provisions, handling, purge-vent-drain, umbilicals and appendages, docking attachment mechanisms, structural design requirements and utility mechanical connections/fittings.

HLS-GW-0004 Provide Structural / Mechanical Attachment
The HLS shall have a docking system compatible with a passive Gateway docking mechanism as defined in the International Docking System Standard (IDSS) Interface Definition Document (IDD).

Rationale: The HLS docking system needs to be compatible with the Gateway docking mechanism to ensure physical spacecraft mating compatibility.

HLS-GW-0006 Provide Passageway between Elements
The HLS shall have a passageway providing for the transfer of crew and cargo to and from Gateway.

Rationale: The Ascent Element and the Gateway require a passageway with hatch that maintains a habitable environment during transit. After hatch is opened, crew and cargo can transfer between modules. Assumes vestibule between the elements has the pressure equalized.

HLS-GW-0011 Docked Mass Limit
While docked to the Gateway, the HLS shall provide supplementary attitude control to the integrated stack when the lander exceeds 45mT.

Rationale: While docked, the Gateway will provide integrated, mated stack attitude control. Assumes no HLS control required for mated operations. This control mass can be re-evaluated as more details are available for mass of the specific provider's design as well as the performance of the Gateway's power and propulsion element.

HLS-GW-0013 Keep-Out Envelope
Excluding docking system components designed to come into contact, the HLS shall maintain physical clearance from Gateway and Orion structure shown in Appendix B, Cross Section Images of Gateway / Orion Configuration.
Rationale: The HLS will be required to maintain a separation space with Gateway and Orion to avoid physical obstruction.

HLS-GW-0014 Coordinate System
The HLS shall comply with the TBD Coordinate System Document.
Rationale: The HLS will need to comply with a coordinate system philosophy that complies with Gateway

HLS-GW-0015 Hatches
The HLS shall have hatches in accordance with DSG-SPEC-HTCH-019, Gateway Program Specification for Hatches (TBS).
Rationale: Note: The Gateway Program Specification for Hatches will be CPIT controlled. The Gateway Program will release the Gateway Program Specification for Hatches in October 2019.

HLS-GW-0016 Transfer Passageway Dimensions
The HLS shall maintain a docking system with transfer passageway diameter dimensions in accordance with IDSS IDD, Rev E, Figure 3.1.1.1-2
Rationale: The HLS needs to provide the capability for an 800mm transfer passageway in the mated configuration.

HLS-GW-0027 Flexibility
The HLS shall meet the initial contact conditions as specified in IDSS IDD, Rev E, Table 3.3.1.1-2.
Rationale: (reference to SCS initial conditions table)

HLS-GW-0028 Mass Properties
The HLS shall meet the mass properties specified in the IDSS IDD, Rev E, Table 3.3.1.2-1.
Rationale: Meeting the mass properties defined in table 3.3.1.2.-1 increases the probability of successful docking.

3.3 Loads and Dynamics Interface Requirements

This section covers on-orbit induced structural loads (load spectra, pressure loads, pressure spectra, thermally induced structural loads, acceleration environment, docking loads, and plume impingement loads) and associated dynamics.

HLS-GW-0017 Docking Loads
The HLS shall limit loads imparted at the docking interface to be within the values specified in IDSS IDD, Rev E, Table 3.3.1.4-1.

Rationale: Docking mechanisms used by HLS docking to Gateway must be compatible with the IDSS. Table 3.3.1.4-1 represents the docking mechanism soft capture system maximum allowable interface loads.

HLS-GW-0018 Undocking Loads
The HLS shall limit loads imparted during undocking to be within the values specified in IDSS IDD, Rev E, Table 3.3.1.4-1.
Rationale: Docking mechanisms used by HLS docking to Gateway must be compatible with the IDSS. Table 3.3.1.4-1 represents the docking mechanism soft capture system maximum allowable interface loads.

HLS-GW-0019 Induced Loads
The HLS induced loads [On-Orbit Induced Loads, On-Orbit Induced Load Spectra, On-Orbit Pressure Loads, On-Orbit Pressure Load Spectra, On-Orbit Acceleration Environment, Plume Impingement Pressure (Normal), Plume Impingement Pressure (Shear)] will be defined during the design and development phase of the HLS Program.
Rationale: The Program will develop a Loads Data Book to capture the load conditions based upon the architecture and design of the integrated HLS and Gateway configuration.

HLS-GW-0026 Intermodule Mating Interface Heat Flux
During docked operations, the HLS shall have a maximum heat flux of TBD at physically mated surfaces.
Rationale: This is a passive thermal limitation on the HLS regarding what heat load it can induce on the Gateway.

HLS-GW-0043 Thermal Independence
When docked to Gateway, HLS shall be thermally independent.
Rationale: HLS will need to be responsible for its own thermal independence and ability to manage its own heat loads during nominal operations.

3.4 Environmental Control and Life Support Interface Requirements

This section covers environmental interfaces including thermal, contamination, humidity, air pressure, atmosphere, and life support.

HLS-GW-0008 Exchange Atmosphere
During open hatch operations, the HLS shall receive ventilation from the Gateway and provide return air through the open vestibule.
Rationale: The Gateway provides inter-module ventilation to circulate air into the HLS Ascent Element through the open hatch. The circulation can be augmented with Inter-Module Ventilation (IMV) ducting. Gateway is developing a standard IMV interface.

HLS-GW-0029 Provide Partial Pressure Data
The HLS shall provide the carbon dioxide (CO2) partial pressure data to Gateway.

Rationale: HLS is responsible for reporting CO2 partial pressure as part of Health and Status data to Gateway.

HLS-GW-0030 Pressurant
The HLS shall utilize nitrogen as the diluent gas within the pressurized volumes.
Rationale: Nitrogen has been chosen as the diluent gas for HLS total pressure control.

HLS-GW-0031 Crewed Oxygen Control Range
Prior to open hatch operations during crewed mission phases, the HLS shall will contain a partial pressure of oxygen between 19.3 kPa (2.8 psi) and 20.7 kPa (3.0 psi).
Rationale: The HLS needs to maintain partial pressure of during crewed mission phases.

HLS-GW-0032 Nominal Pressurization Gas Losses
The HLS nominal losses of pressurization gasses shall not exceed TBD over TBD duration.
Rationale: HLS leak rate expectations need to be understood for both HLS and the Gateway.

HLS-GW-0033 Vestibule Depressurization for Mission Success
The HLS shall provide a means to depressurize the vestibule in order to disengage from Gateway.
Rationale: The HLS needs the capability to prevent Loss of Mission.

HLS-GW-0034 Nominal Pressure Oxygen Limit
The HLS shall be compatible with concentrations below 25.9% oxygen with nominal operating functions at pressures above 80 kPa (11.8 psia).
Rationale: Elevated oxygen concentrations are needed at lower pressures to sustain human life.

HLS-GW-0035 Reduced Pressure Oxygen Limit
The HLS shall be compatible with conditions up to 30% oxygen for atmosphere pressures up to 70 kPa (10.2 psia).
Rationale: Elevated oxygen concentrations are needed at lower pressures to sustain human life.

HLS-GW-0036 Total Control Pressure
During open hatch operations, the HLS shall be compatible with a total Gateway atmosphere pressure between 65 kPa (9.5 psia) to 103 kPa (14.9 psia) when open to attached modules.
Rationale: The interface requirement is the functional interface with Gateway for the operating pressure of the integrated configuration as defined by the Interoperability Standard and the Gateway operating pressure. The operating pressure range is established for the integrated stack configuration during open hatch operations.

HLS-GW-0037 Microbial Limits
Prior to open hatch operations, the HLS shall limit the levels of microbial contaminants by maintaining an average continuous flow of 2.3 cubic meters per minute (80 CFM) or greater of air that has been cleaned to have at least 99.97% of airborne particles 0.3 micrometers (µm) and larger in diameter/size removed.

Rationale: Microbial limits for breathing air are designed to prevent infection and allergic response. Requirements are based upon industrial hygiene recommendations for similar environments (American Society of Heating, Refrigerating and Air-Conditioning Engineers (ASHRAE-62)).

HLS-GW-0038 Particulate Limits
Prior to open hatch operations, the HLS shall limit the concentration in the cabin atmosphere of particulate matter ranging from 0.5 micron to 100 microns in aerodynamic diameter to less than 0.2 mg/m3.

Rationale: All modules must control particulates. Inhalation of particulates can cause irritation of the respiratory system. Limits for particulates are based on Occupational Safety and Health Administration (OSHA) standards. Crew generation rates are based on a study that addressed particulate matter generated from people with a focus on skin fragments, sneezes, coughs, clothing fibers, metallics, hair, paint chips, plastics, and miscellaneous items that included tissue, food, yarn, woven and glass tape, finger nail clippings, and pencil lead.

HLS-GW-0039 Gaseous Pollutant Levels
Prior to open hatch operations, the HLS shall limit the individual gaseous pollutant concentrations in habitable volumes to below the limits specified in JSC 20584 Spacecraft Maximum Allowable Concentrations (SMAC) for Airborne Contaminants.

Rationale: The HLS needs to ensure gaseous pollutant concentrations in the cabin atmosphere be maintained below threshold levels documented in JSC 20584, Spacecraft Maximum Allowable Concentrations (SMAC) for Airborne Contaminants

HLS-GW-0040 Lunar Dust Control
The HLS shall limit lunar dust particles exchanges with the Gateway habitable atmosphere to <TBD particle sizes and <TBD counts.

Rationale: The HLS will limit dust particles so that during open hatch operations the HLS will not introduce lunar dust to the Gateway

HLS-GW-0041 Personal Protective Equipment
The HLS shall provide crew emergency response equipment common with Gateway emergency response equipment.

Rationale: Using common emergency systems across the crew vehicle will simplify crew training and improve emergency response speed.

HLS-GW-0042 Isolation due to Fire

The HLS shall isolate a fire event within 30 seconds (TBR) of detection, including removal of power in the affected pressurized element location and termination of forced airflow at the affected pressurized element location.

Rationale: Isolation must not disable critical systems. Additionally, isolation must not occur between the crew and the Earth return vehicle. Access to consumables (oxygen and water) to support the crew until abort can be performed must be taken into consideration

3.5 Electrical Interface Requirements

This section covers electrical interfaces including power, switching, fusing, grounding, electro-explosive devices, electromagnetic interference and electromagnetic compatibility.

3.5.1 Electrical Power

HLS-GW-0005 Receive Power

The HLS shall have the capability to receive power via two separate 3kW Power/Data Transfer Umbilicals (PDTU) of the docking mechanism as defined in the IDSS IDD.

Rationale: While docked, Gateway can supply power to HLS, but the available power will vary according to mission phase and specific operations. Power transfer is expected to be a total of 2kW (average) from the Gateway across both connectors. Power flows through the power connectors of the docking mechanism.

HLS-GW-0044 Self-Sufficient Power

The HLS shall generate all power required for the HLS systems.

Rationale: The HLS will be power independent from the Gateway power for all docked operations. During certain Gateway operations where the Gateway may be significantly shadowing the HLS arrays or brought the HLS into an attitude such that there is insufficient power generation, the HLS can receive power from the Gateway Electrical Power Supply (EPS). The Gateway has not allocated for power transfer to HLS and all transfer power will require power resource assessments by Gateway prior to any power transfer.

HLS-GW-0045 Power Quality

The HLS shall conform to the DSG-RQMT-020 Gateway Electrical Power Quality Specification Requirements for Interface B 120Vdc at the HLS-EPS/Gateway Docking Interface.

Rationale: The HLS will be able to receive power from the Gateway will comply with DSG-RQMT-020 Gateway Electrical Power Quality Specification Requirements for 120Vdc at HLS/Gateway Docking Interface.

HLS-GW-0046 Electrical Ground

The HLS shall provide a return to ground reference (inside HLS).

Rationale: The Gateway EPS grounding design is an integrated design that takes into account the changing architecture during assembly. Each element's EPS grounding design must take into account any adjoining element's EPS grounding design. The

Gateway EPS power converters have a floating power return line at all Gateway docking ports. The power return line from Gateway shall be referenced at a single point inside the visiting vehicle. If HLS requires power from Gateway EPS and if HLS is compatible to the DSG-RQMT-020 Gateway Electrical Power Quality Specification Requirements for 120Vdc, then there is no need of an HLS based converter and the Gateway docking converter will control the voltage and current to be compatible to the HLS. If there is an additional visiting vehicle converter, then the HLS will provide a return/ground reference on each side of the HLS converter that receives power from the Gateway docking port. The HLS converter does not require dc-isolation.

3.5.2 Electromagnetic Compatibility

HLS-GW-0047 Electromagnetic Compatibility
The HLS shall be electromagnetically compatible with the Gateway at the interface.
Rationale: Electromagnetic Compatibility (EMC) is essential to the success of any vehicle design that incorporates a complex assortment of electronic, electrical, and electromechanical systems and sub-systems that is expected to meet operational and performance requirements while exposed to a changing set of electromagnetic environments composed of both man-made and naturally occurring threats. Gateway system level requirements are found in GP 11464 (DSG-RQMT-004), Gateway Electromagnetic Environmental Effects (E3) Requirements, a tailored version of MIL-STD-464 specifically tailored for the Gateway Program. Gateway electromagnetic interference (EMI) requirements are found in GP 11461 (DSG-RQMT-007), Gateway Requirements for the Control of Electromagnetic Interference Characteristics of Subsystems and Equipment Document, a tailored version of MIL-STD-461 specifically tailored for the Gateway Program.

HLS-GW-0048 Bonding
The HLS shall meet the Electrical Bonding requirements of NASA-STD-4003A, NASA Technical Standard: Electrical Bonding For NASA Launch Vehicles, Spacecraft, Payloads, and Flight Equipment for a Class R/H bond at the structural / mechanical interface to the Gateway.
Rationale: Proper electrical bonding in accordance with bonding classifications and pertinent to the specific application is necessary to meet performance, safety, and EMC requirements

HLS-GW-0059 Induced Current to Gateway
While mated to Gateway, the HLS shall not induce more than 1 mA current to Gateway [TBR].
Rationale: Spacecraft charging is a complex physical phenomenon that varies dramatically with orbital altitude, plasma density, vehicle design, and many other factors. Underlying physics, and appropriate requirements, associated with Plasma Vehicle Charging are contained in multiple references. These include: NASA-HDBK-4002A, Mitigating In-Space Charging Effects - A Guideline; NASA-HDBK-4006, Low

Earth Orbit Spacecraft Charging Design Handbook; NASA-RP-1354 (Nov. 1994), Spacecraft Environments Interactions: Protecting Against the Effects of Spacecraft Charging; NASA-RP-1375 (Aug. 1995), Failures and Anomalies Attributed to Spacecraft Charging; and NASA-TP-2361 (1984), Design Guidelines for Assessing and Controlling Spacecraft Charging Effects,NASA-HDBK-4007 Baseline Spacecraft High-Voltage Paschen and Corona Design Handbook, NASA-STD-4003 A Electrical Bonding for NASA Launch Vehicles, Spacecraft, Payloads, and Flight Equipment.

HLS-GW-0060 Electromagnetic Compatibility Requirements for Pyrotechnics
The HLS shall meet the Electromagnetic Compatibility requirements in JSC 62809, Human Rated Spacecraft Pyrotechnic Specification.

Rationale: The design of pyrotechnic systems must preclude hazards from unintentional initiation and from failure to fire. Radio frequency (RF) energy of sufficient magnitude to degrade or fire pyrotechnics can be electromagnetically coupled into a pyrotechnic subsystem from the external electromagnetic environment. The possible consequences include both hazards to safety and performance degradation. Compliance with these requirements ensures prevention of performance degradation or inadvertent activation of electroexplosive devices (EEDs) or firing circuits. These requirements apply to all systems and subsystems utilizing explosive or pyrotechnic components, particularly electrically initiated components. Assurance of safety of pyrotechnic systems from an EMC perspective is directly dependent on compliance with these requirements.

3.6 Communications and Data Handling Interface Requirements

This section covers all communications, tracking, command and data handling requirements.

Note: In addition to these HLS to Gateway Communication Interface Requirements, there will be simultaneous HLS to Mission Systems communication Interface Requirements that mandate that simultaneous Radio Frequency Communication take place from HLS to Gateway and HLS to Mission Systems. Simultaneous Radio Frequency Communication paths are being used to mitigate the uncertainties associated with radio frequency communication at the lunar poles. Multipath degradation has the potential to cause intermittent or degraded direct-with-Earth (DWE) communications with Mission Systems at certain times, while Gateway's phasing orbit has the potential to cause communication outages when Gateway is occulted by the moon as it travels over the lunar North Pole in its Halo Orbit. Having simultaneous dissimilar Radio Frequency communication paths helps ensure that continuous radio frequency communication coverage is available to the Mission and the Crew.

3.6.1 Communications and Tracking

HLS-GW-0001 Exchange Data
The HLS shall communicate with Gateway for data exchange.

Rationale: HLS communications with Gateway allows for direct data transfer between the HLS and the Gateway (including commands, telemetry, health & status, guidance, navigation & control (GNC) data, audio, video, etc.) during rendezvous, proximity

operations and docking as well as during Lunar descent, surface ops and ascent. This link can also be used to relay data between HLS and Earth via Gateway.

HLS-GW-0002 Maintain Visiting Vehicle Communication link
When within 400km of the Gateway, the HLS shall establish and maintain bi-directional communication, telemetry, and radiometric ranging with Gateway on the S-Band Visiting Vehicle Link for Rendezvous, Proximity Operations, Docking and Undocking (RPODU) activities.

Rationale: When the HLS is within ~400-100 km of Gateway, it establishes a communication link with Gateway using the HLS link. The HLS, in Point B mode, generates, modulates and transmits the range channel data; and it receives and processes the coherent turn-around ranging channel and carrier to obtain the range and range-rate measurements. The system, in Point A mode, coherently retransmits the received carrier and range channel to support radiometric measurements. During HLS RPODU activities, the HLS is in Point A mode and the Gateway is in Point B mode. Configuring the system this way enables the HLS to carry a standard S-band transponder to communicate with Gateway. Once HLS is docked with Gateway, there is a hardline interface between the HLS and Gateway for data exchange.

HLS-GW-0010 Provide for Wi-Fi Communications
When within 200m of the Gateway, the HLS shall maintain a wi-fi communication link during HLS proximity operations with Gateway.

Rationale: The International Communication System Interoperability Standard (ICSIS) provides the standards and protocols for interoperable communications between cislunar vehicles and their interfaces. In order for HLS to be interoperable and compatible with Ground, Gateway and other missions, its communication system needs to follow the requirements in ICSIS.

HLS-GW-0012 Lunar Surface Ascent and Descent Communication
The HLS shall communicate with Gateway for data exchange and radiometric ranging during lunar descent, surface operations and ascent to Gateway.

Rationale: When the HLS is within ~400-100 km of Gateway, it establishes a communication link with Gateway using the VV link. HLS communications with Gateway allows for direct data transfer between the HLS and the Gateway (including commands, telemetry, health & status, GNC data, audio, video, etc.) during lunar descent, surface ops and ascent.

HLS-GW-0061 Default Receive Mode
The HLS shall have the receiver enabled during all modes of operation on the link(s) from Gateway.

Rationale: Enable the receiver when within 440km of Gateway and leave enabled for the remainder of the mission except when docked.

HLS-GW-0062 Security
The HLS shall encrypt and decrypt all communications on the link(s) with Gateway.
Rationale: The HLS needs to protect the information carried on its links.

HLS-GW-0063 Full-Duplex Channel
The HLS shall have full-duplex communications on all Gateway link(s).
Rationale: Each link will have the ability to transmit and receive simultaneously using techniques such as frequency separation, Time-division multiple access (TDMA), etc.

HLS-GW-0064 Forward Error Correction, Visiting Vehicle Link
The HLS shall use Low-Density Parity-Check (LDPC) Rate-1/2 Forward Error Correction (FEC) for encoding and decoding with the ability to disable it upon command on the Visiting Vehicle link.
Rationale: The HLS needs to able to enable or disable FEC to support contingency and other operational scenarios.

HLS-GW-0065 Receive Frequency, S-band
The HLS shall receive signals from the Gateway using the 2025-2110 MHz (S-band) frequency band.
Rationale: Use of near-Earth S-band is compliant with International Telecommunications Union (ITU) and Consultative Committee for Space Data Systems/Space Frequency Coordination Group (CCSDS/SFCG) recommendations. S-band is used to communicate with HLS.

HLS-GW-0066 Transmit Frequency, S-band
HLS shall transmit signals to the Gateway using the 2200-2290 MHz (S-band) frequency band.
Rationale: Use of near-Earth S-band is compliant with ITU and CCSDS/SFCG recommendations. S-band is used to communicate with HLS.

HLS-GW-0067 Data Link Framing
The HLS shall transmit and receive data streams using framing as defined in CCSDS 732.0-B-3, AOS Space Data Link Protocol, September 2015.
Rationale: The HLS shall transmit data streams using data link framing as defined in CCSDS 732.0-B-3, AOS Space Data Link Protocol, September 2015, on Gateway-HLS link.

HLS-GW-0068 Encapsulation and Decapsulation, S-band
The HLS shall encapsulate/de-encapsulate Internet Protocol (IP) packets using the CCSDS Encapsulation Service (CCSDS 133.1-B-2, Encapsulation Service, and CCSDS 702.1-B-1, IP Over CCSDS Space Links).
Rationale: The CCSDS standard for transferring IP packets over a space link is to prepend CCSDS Internet Protocol Extension (IPE) octet(s) to each IP packet and encapsulate the result in a CCSDS Encapsulation packet as described in CCSDS 702.1-B-1, IP Over CCSDS Space Links, and CCSDS 133.1-B.2, Encapsulation

Service. The Space Assigned Number Authority (SANA) registry lists the CCSDS recommended protocols to be encapsulated and their enumerations for the content of the IPE header.

HLS-GW-0069 Receive Frequency, Ka-Band
The HLS shall receive signals from Gateway on the Gateway - Lunar System link using 22.55 - 23.15 GHz frequency on the Ka band.
Rationale: Consistent with Interagency Operations Advisory Group (IOAG) Lunar Communications Architecture Working Group (LCAWG) draft recommendations; and ITU and CCSDS/SFCG recommendations which has Ka-band allocated for communications between lunar orbit and lunar surface.

HLS-GW-0070 Transmit Frequency, Ka-Band
The HLS shall use 25.5 – 27.0 GHz frequency on the Ka band to transmit signals to the Gateway on the Gateway - Lunar System link.
Rationale: Consistent with IOAG LCAWG draft recommendations; and ITU and CCSDS/SFCG recommendations which has Ka-band allocated for communications between lunar orbit and lunar surface.

HLS-GW-0071 Forward Error Correction, Lunar System Link
The HLS shall use LDPC Forward Error Correction on the Lunar Systems Links, with rates of either ½, 2/3, 4/5, or 7/8, by mutual agreement, with the ability to disable Forward Error Correction upon command.
Rationale: Low Density Parity Coding (LDPC) was chosen overall because, although it can be quite computationally-expensive to decode, it offers ~2 dB more coding gain than that provided by concatenated Reed-Solomon & Convolutional codes, and thus it offers very high performance. Note that there are four different coding rates from which to choose, and the specific coding rate should be chosen (mutually-agreed upon by Gateway and HLS) to optimize the particular link for the particular mission phases and data rate needs. For example, Rate-7/8 may be used when spectrum bandwidth is a larger consideration than data rates, perhaps as HLS departs Gateway for the moon. Later in the mission, the LDPC coding rate may change to ½, as the signals get weaker and link speeds are of more importance than spectral bandwidth. Thus, on a given link, multiple LDPC code rates could be used at different times, as long as Gateway and HLS remain in mutually-agreed-upon synchronization. Also, note that the Lunar Systems Links consist of S-Band and/or Ka-Band links (sometimes one, sometimes the other, sometimes both), and because these two links are totally separate entities, different LDPC rates may be used on each of those two links at the same time (Ka-Band link may use, say, rate 7/8, while S-Band Link uses, say, Rate ½). Each link must have the ability to disable Forward Error Correction upon command, either in the case that link performance is such that FEC is not needed, or in the case that there are synchronization problems, and FEC is preventing proper link synchronization.

HLS-GW-0072 Application Layer Transfers

The HLS shall implement Delay Tolerant Networking (DTN) Bundle Protocol (BP) as specified in CCSDS 734.2-B-1, CCSDS Bundle Protocol Specification, on links with Gateway.

Rationale: This will allow data flows to be routable by intermediate nodes. Any application that expects to flow data to and from Earth either directly or relayed should use BP to accommodate delays or end-to-end link availability. Though IP may work in some cislunar cases, use of BP will allow the application to also function in deep space cases.

HLS-GW-0073 Link Margins
The HLS shall have a minimum 3 dB link margin at the specified frame error rate on RF links with Gateway.

Rationale: Having a certain amount of link margin ensures that the communication link can still be established in case there are additional degradations during off-nominal or contingency situations. The link margin shall be calculated using the link's maximum range figure.

HLS-GW-0074 Frame Error Rate, S-band
The HLS shall have a frame error rate (FER) less than or equal to 10-7 at the output of the LDPC decoder for S-band links with Gateway.

Rationale: This is a Post-Decoder rate, applying equally to both forward and return links, and was chosen to assure nearly error-free communications on HLS/Gateway S-band links. For example, for an S-Band link with a bit rate of 4 Mbits/sec and an LDPC Rate-½ Frame size of 4096 octets, that equates to about 122 frames/second, and a post-correction frame error rate of one frame error every 22.8 hours, which is nearly error-free.

HLS-GW-0075 Frame Error Rate, Ka-band
The HLS shall have a frame error rate less than or equal to 10-7 at the output of the LDPC decoder for Ka-band links with Gateway.

Rationale: This is a Post-Decoder rate, applying equally to both forward and return links, and was chosen to assure nearly error-free communications on HLS/Gateway Ka-band links. For example, for a Ka-Band link with a bit rate of 50 Mbits/sec and an LDPC Rate-7/8 Frame size of 1020 octets, that equates to about 6,127 frames/second, and a post-correction frame error rate of one frame error every 27 minutes, which is probably sufficient for links that primarily carry high-rate motion imagery data.

3.6.2 Command and Data Handling

HLS-GW-0007 Receive Commands
When attached to Gateway, the HLS shall have the capability to exchange commands via the Gateway interface.

Rationale: The HLS needs to support an extensible capability in which critical commanding may be necessary from a vehicle docked to HLS. The programs are studying the function for HLS to provide for commanding to Gateway.

HLS-GW-0076 Interoperability Standard Requirements
The HLS shall have a network compliant with the IDSS IDD, Rev E, Section 3.4.1.9.2.
Rationale: The IDSS will be updated to reflect 1000Base T as part of deep space docking mechanisms development.

HLS-GW-0077 Time-Triggered Ethernet
The HLS shall have a network that supports a tailorable 802.3-2008 1000BaseT standard (Gigabit Ethernet) per the International Avionics System Interoperability Standard (IASIS), Section 3.3.1.1.1.
Rationale: The 1000BaseT network provides the backbone network in which data and services are provided among the elements or spacecraft.

HLS-GW-0078 Redundant Network Planes
The HLS shall have 3 redundant Network Planes of 1000BaseT per each of the International Docking System (IDS) docking umbilical connectors present on any module.
Rationale: The Gateway is dependent upon 3 redundant planes as part of an overall integrated Avionics architecture that meets expected reliability, safety, fault tolerance, and fault containment.

HLS-GW-0079 Traffic Prioritization
If the HLS Inter-element network supports Time Triggered Ethernet (TTE) or Rate-Constrained (RC), the HLS shall prevent lower priority data from disrupting higher priority communication.
Rationale: The Gateway Inter-Element Network prevents Best Effort data sources from interfering with the Protocol Control Frames, Time Triggered messages and Rate Constrained messages. Gateway Inter-Element Network configuration tools need to be able to configure discoverable pre-determined and prohibited commercial off-the-shelf (COTS) data paths.

HLS-GW-0080 Status Messages
The HLS shall transmit network health status messages once a second.
Rationale: Makes network status available for downlink or storage as needed.

HLS-GW-0081 Unique Identifiers
If the HLS Inter-element network supports RC, the HLS shall have network End Systems (Network Switch, Network Interface Controller (NIC) hosting Least Recently Used (LRUs)) that are uniquely identified in the HLS Network configuration table definitions defined in the HLS (VV) to Gateway ICD.
Rationale: Configuration tables are used to define the source media access control (MAC) address. Will be captured in the ICD.

HLS-GW-0082 Lab Operations

The HLS shall provide test ports on each network plane capable of mirroring any other port to support lab operations.

Rationale: This requirement specifically calls for the wiring system to provide access to the test ports. A test port is used to capture data that flows on the Gateway Inter-Element Network for fault isolation.

HLS-GW-0083 Status Registers
The HLS shall have a network switch status register that is accessible over the HLS Inter-Element Network.

Rationale: Required for remote monitoring and de-bugging.

HLS-GW-0084 Network Plan Independence
The HLS shall have each network switch connected only to a single (one) network plane.

Rationale: The Gateway Inter-Element Network is configured in a topology to support up to three switch planes and prevent propagation of faults between the planes.

HLS-GW-0085 Transition to Fail Passive State
Upon detection of an internal power failure, the HLS shall have the network reset in a passive state.

Rationale: This is accomplished by a guaranteed reset that when asserted results in outputs transitioning to a passive state.

HLS-GW-0086 Protecting Time Triggered Precedence
The HLS shall have network switches that discard received packets that would interfere with Time Triggered data allocations.

Rationale: This monitor ensures that this class of traffic data has priority. (TT Only)

HLS-GW-0087 Bandwidth Allocation Gap Monitoring
For rate-constrained networks, the HLS shall have network switches that provide a mechanism for the compression master (COM) to independently monitor the network packet bandwidth allocation gap (BAG) to protect Rate Constrained allocations.

Rationale: This allows determination of message validity. (RC Only)

HLS-GW-0088 Handling Priority Disagreement
For rate-constrained networks, the HLS shall have networks that discard received packets that disagree with the predefined schedule in the Network Management Configuration Tables

Rationale: Limits one network element from consuming network bandwidth beyond its predetermined allocation. (RC Only).

HLS-GW-0089 Network Synchronization

The HLS shall have network switch synchronization that establishes network synchronization such that the local clocks of no two healthy network controllers in the same synchronization domain differ by more than 50 microseconds.

Rationale: This requirement is necessary to specify the worst case precision of the network.

HLS-GW-0090 Network Faults

The HLS shall have a network that remains operational in the presence of any one fault.

Rationale: Requirement is consistent with the fault tolerance requirements of the integrated vehicle. It is assumed the failure behavior of network switches is fail-silent or fail-inconsistent-omission. It is assumed the failure behavior of network controllers is fail-silent, fail-inconsistent-omission, or fail-arbitrary.

HLS-GW-0091 Synchronization Integration Period

The HLS shall have network switch synchronization algorithm that maintains the established network synchronization for at least one integration period without receiving synchronization messages.

Rationale: Synchronization protocol messages can be dropped due to single event upset (SEU) or other transients and will not result in the loss of synchronization. The fault tolerance of the network is implied by the topology and the setup of the timing and compression masters.

HLS-GW-0092 Synchronization During Power Application

The HLS shall have network switch synchronization that establishes synchronization within 1.0 seconds of power application and release from reset when the required timing masters are available.

Rationale: Synchronization protocol messages can be dropped due to SEU or other transients and will not result in the loss of synchronization. The fault tolerance of the network is implied by the topology and the setup of the timing and compression masters.

HLS-GW-0093 Network Switch Table Loading

The HLS shall have network switches that are capable of loading new configurations over the network.

Rationale: The network switch configurations will be updated over time as the mission scenario changes or new modules are added.

HLS-GW-0094 Bit Error Rate

The HLS shall have an inter-element network that provides network communications with a 1E-12 or less Bit Error Rate (BER) per link.

Rationale: The BER needs to be at a reasonable level to prevent frequent loss of data disrupting system operation.

HLS-GW-0095 Configuration Tables

The HLS shall accept the Gateway TTE network schedule (TBS).

Rationale: The HLS needs to integrate and synchronize with the Gateway TTE network after docking to provide a seamless compatible network communication system for mixed-criticality applications.

HLS-GW-0096 Identical Critical Traffic Schedules
The HLS shall have network critical traffic schedules for redundant network planes identical to maintain symmetry.
Rationale: There is a need for identical traffic to be carried on the planes however exceptions could be made for specific scheduling parameters or traffic within an individual element or between elements.

HLS-GW-0097 Configuration File Verification
The HLS shall have every switch verify the configuration file received was not corrupted prior to loading.
Rationale: This prevents a corrupted configuration file to a switch.

HLS-GW-0098 Rate Constrained Networking
The HLS shall have a network that supports a tailorable ARINC 664-p7 standard (Deterministic rate constrained capability over Ethernet), per IASIS, Section 3.3.1.1.2.
Rationale: Data services requiring deterministic guaranteed delivery will need to be available to support critical needs. This service is available over the same physical network as that being utilized for best effort Ethernet.

HLS-GW-0099 Configuration Variables
The HLS shall have a network that supports a tailorable SAE AS 6802 standard (Time-triggered Ethernet) including all Section 11 parameters.
Rationale: Orion and ESA's Ariane 6 launcher both incorporate TTE, which helps better meet size, weight, and power challenges. Three planes of Ethernet will facilitate safety, redundancy, and reliability concerns as it allows connectivity for communication with Orion's 3 onboard data network (ODN) planes for critical communication as well as communication between the Gateway Elements. TTE, in conjunction with a time/space partitioned software standard such as ARINC 653, allows for partitioned access to shared resources for both critical and non-critical applications within the same processor (e.g., frame memory), greatly reducing what would otherwise be separate hardware with its subsequent size, weight, and power penalties. The networks, likewise, can transfer critical and non-critical data over the same network, likewise reducing size, weight, and power. Also, Ethernet in general, allows for utilization of more COTS applications/hardware due to its relative ubiquity in industry.

HLS-GW-0100 Time-Triggered Ethernet Devices
The HLS shall have time-triggered ethernet devices that provide the following classes: a) Protocol control frames; b) Time-triggered traffic; c) Rate-constrained traffic; d) Best-effort traffic.

Rationale: General Concept is that Time Critical Data is Time Triggered. Rate Constrained Traffic can be used for intercommunications and off vehicle data. Best Effort/COTS Traffic is used by COTS End Systems and Network Maintenance functions and is reserved for non-critical data. Protocol control frames are used to synchronize the network in accordance with SAE AS 6802.

HLS-GW-0101 End System Transfer
The HLS shall have a network controller that transfers frames between end systems per the Gateway Common Network configuration table definitions defined in the HLS (VV) to Gateway ICD.
Rationale: This requirement establishes the need to prioritize Time-Triggered, Rate Constrained, and BE network traffic. It forms the basis of the Network Partitioning Rule that: Lower priority traffic class faults and overloading conditions do not propagate to higher priority traffic classes.

HLS-GW-0102 Inter-Element Network Startup
The HLS network shall time synchronize with the Gateway TTE network within 1 minute (TBR) after establishing network connectivity upon docking or power-up.
Rationale: This requirement is needed to ensure the network becomes available in bounded time. It assumes all network components (e.g. switches and controllers) are powered on without failure. The time between configuration (i.e. loading a schedule) and reaching synchronization will be influenced by parameters in the network schedule.

HLS-GW-0103 Host Synchronization
The HLS shall have network controllers that provide a means of a Host to synchronize internal processing to the network.
Rationale: In order for the end systems to move traffic in their assigned windows, their NIC must be synchronized to the overall network schedule and operation. This requirement ensures that the network performs this network-wide synchronization.

3.7 Performance Interface Requirements

This section covers performance interfaces including orbits and Delta V.

3.8 Operations Interface Requirements

This section covers operations interfaces including flight operations (docking/alignment, rendezvous, deployment/retrieval, and flight crew), ground operations (checkout, prelaunch, post landing, personnel), and command/control center (man-machine operations, personnel).

HLS-GW-0003 Perform Rendezvous Proximity Operations, Docking and Undocking
The HLS shall be capable of performing RPODU with Gateway.
Rationale: Rendezvous, proximity operations, docking, and undocking operations are critical functions required for crew survival and mission success. The HLS design will ensure both manual and automated RPODU capabilities and functions are viable as

the primary or backup method with HLS as the maneuvering, chaser vehicle. Crew action for contingencies and hazard control does not invalidate this requirement. Use of human inspection of camera data for error checking of relative navigation sensors does not invalidate this requirement. Switching to manual RPODU after one failure does not invalidate this requirement. The docking mechanism attached to HLS will be IDSS compatible.

HLS-GW-0104 Outside Approach Sphere Safe Trajectory
Prior to Approach Initiation (AI) and during re-rendezvous, the HLS shall maintain nominal approach and planned contingency trajectories, including expected dispersions (99.73 percent of the trajectories with 90 percent confidence level), to keep the HLS outside the Approach Sphere (AS).

Rationale: Keeping the HLS outside the Approach Sphere until provided authority to proceed ensures Gateway safety. AS sizing accounts for relative state vector uncertainties and vehicle dynamics. ATP will be granted once HLS is confirmed on appropriate trajectory and in good status/health.

HLS-GW-0105 Outside Approach Sphere Decision Point Opportunities
During nominal approach and re-rendezvous, the HLS shall include at least one point outside of the AS during Integrated Operations at which the vehicle will not continue the nominal approach unless it has received authority to proceed.

Rationale: Authority to proceed (ATP) may be granted by mission control, onboard crew or automated systems, provided all criteria for safe passage have been met.

HLS-GW-0106 Inside Approach Sphere Decision Point Opportunities
During nominal approach, the HLS shall include at least one point inside of the AS and outside of the keep out sphere (KOS) at which the vehicle will not continue the nominal approach unless it has received authority to proceed.

Rationale: ATP may be granted by mission control, onboard crew or automated systems, provided all criteria for safe passage have been met.

HLS-GW-0107 Attitude and Orbit Constraints
The HLS shall be able to perform free flight integrated operations with the Gateway orbit, attitude characteristics, and the solar beta environment as defined in TBD.

Rationale: Gateway orbit may drive HLS trajectory, and HLS ConOps will determine desired Gateway attitude. Nominally, the Gateway will be in NRHO with Solar Pressure Equilibrium Attitude (SPEA), but orientation changes to support docking can be negotiated.

HLS-GW-0108 Abort
The HLS shall be capable of performing an abort maneuver during all Free Flight Integrated Operations.

Rationale: HLS must be able to avoid Gateway when "aborted", i.e. it must maintain a safe-separation distance to avoid contact or harm to Gateway.

HLS-GW-0109 Abort Commanding
The HLS shall be able to perform an abort maneuver independent of the Gateway or ground through commands issued by the onboard HLS crew or automatically by its onboard systems.

Rationale: HLS must perform abort without relying on Gateway actions (burns or maneuvers by Gateway) to avoid contact or harm to Gateway.

HLS-GW-0110 Pre-Approach Initiation Abort
During an abort maneuver initiated prior to AI, the HLS shall modify the trajectory to avoid intercepting the Gateway AS in fewer than 24 hours (TBR).

Rationale: In order to ensure the Gateway safety, automatic abort functions would be necessary. Standard rules for abort operations would increase mission safety. For manned HLS, the duration may be abbreviated if onboard crew can remedy the issue and confirm vehicle is safe to proceed to Gateway.
Note:
In International Space Station (ISS) Rendezvous, Passive Abort (PA) and Collision Avoidance Maneuver (CAM) are defined. HLS must be able to execute a CAM at all times for all mission phases. During a CAM, the visiting vehicle must stop closing (decreasing relative range) and then establish an opening rate (increase relative range). For ISS rendezvous, a CAM must put the vehicle on a 24-hour safe free drift trajectory. The safe free-drift trajectory duration for cislunar and deep space operations needs to be defined based on vehicle kinematics/dynamics.

It should be considered to have a CAM capability issued from the manned Gateway to the unmanned visiting vehicle (in particular when supporting rendezvous operations with a small robotic element) to ensure spacecraft safety.

HLS-GW-0111 Post-Approach Initiation Abort
During an abort maneuver initiated after AI, the HLS shall modify the trajectory to be outside the Gateway AS within 90 minutes after the abort maneuver initiation.

Rationale: The 90 minute timer was established based on legacy requirements (based on ISS LEO VV IRD). The intent was that the VV depart the AS within one orbital rev. For cis-lunar application, this timer is an initial starting point until Gateway and HLS dynamics and capabilities are understood in cis-lunar environment.

HLS-GW-0112 Irrecoverable Failure Automatic Abort Initiation
When automated, the HLS shall automatically initiate an abort maneuver if an irrecoverable failure (i.e. not able to reconfigure/recover to a failsafe state) leaves the HLS in a non-fail safe state to a catastrophic hazard.

Rationale: The Vehicle must be capable of protecting against a failure during the automated (uncrewed) operation of the system.

HLS-GW-0113 Pre-Keep Out Sphere Abort
In the event of an abort maneuver initiated prior to KOS ATP, the HLS shall refrain from entering the KOS.

Rationale: Inside the AS but outside the KOS, the HLS trajectory after abort has been initiated will not enter the KOS. The intent is to maintain safe trajectory that does not intersect with Gateway, maintaining Gateway safety.

HLS-GW-0114 Post-Keep Out Sphere Abort
In the event of an abort maneuver initiated inside the KOS or entering the KOS after receipt of an abort command, the HLS shall establish a positive opening rate.
Rationale: Vehicle must arrest its closing rate, and initiate a departure burn (opening rate).

HLS-GW-0115 Post-Keep Out Sphere in Approach Sphere Abort
In the event of an abort maneuver inside the KOS and a positive opening rate has been established, the HLS shall maintain the positive opening rate within the AS.
Rationale: Maintaining a positive opening rate inside the AS ensures that the HLS is departing from the Gateway, and not posing further collision risk to Gateway. It also simplifies visual monitoring by the crew when abort is executed in proximity to the Gateway.

HLS-GW-0116 24-hour Outside Approach Sphere Abort
After exiting the Gateway AS following an abort maneuver, the HLS shall avoid intercepting the AS in fewer than 24 hours (TBR) from the abort maneuver initiation.
Rationale: An HLS abort will place the spacecraft on a trajectory that does not contact Gateway. Keeping outside the AS ensures Gateway safety following the abort. The time limit of 24 hours ensures adequate time for the Gateway to execute an evasive maneuver, should HLS be predicted to intersect Gateway after abort.

HLS-GW-0117 Retreat Maneuver
During an approach inside the KOS, the HLS shall be able to perform a retreat to a hold-point.
Rationale: VV can perform a retreat while inside the KOS to a hold-point, where the spacecraft or mission control can ascertain the reason for retreat, and then determine if can resume RPODU or needs to abort.

HLS-GW-0118 Inside Keep Out Sphere Loss of Communications
While uncrewed, the HLS shall automatically perform an abort maneuver when all HLS communication links are unavailable for more than 50 seconds while the HLS is inside the KOS.
Rationale: The 50 second (TBR) time frame is associated with time to switch to other comm system and close proximity to Gateway.

HLS-GW-0119 Inside Approach Sphere Loss of Communications
While uncrewed, the HLS shall automatically perform an abort maneuver when all HLS communication links are unavailable for more than 2 minutes when it is outside the KOS but inside the AS.

Rationale: The 2 minutes (TBR) time frame is associated with time to switch to other comm system and the relative distance to Gateway.

HLS-GW-0120 Approach Corridor
During approach to the Gateway within the KOS, the HLS shall approach within a predefined corridor, which is based on the nominal approach trajectory, including expected dispersions (99.73 percent of the trajectories with 90 percent confidence level).

Rationale: The predefined approach Corridor will be based on the anticipated trajectory and include expected dispersions.

In ISS rendezvous, all visiting vehicles are required to approach the ISS, when inside the KOS, within the approach corridor. Each visiting vehicle had a unique approach corridor, documented in the ICD that was based on the vehicle's capabilities and operations. The approach corridor was used by ISS crew and ground operators to monitor the vehicle performance and determine if any action was required.

HLS-GW-0121 Departure Corridor
During departure from the Gateway within the KOS, the HLS shall depart within a predefined corridor, which is based on the nominal departure trajectory, including expected dispersions (99.73 percent of the trajectories with 90 percent confidence level).

Rationale: In ISS departures, all visiting vehicles were/are required to depart from the ISS within agreed to corridors, which were defined mainly by the monitoring capability of the ISS and the visiting vehicle's performance. The departure corridor was used by ISS crew and ground operators to monitor the vehicle performance and determine if any action was required.

HLS-GW-0122 Departure Opening Rate
During departure, The HLS shall design translational maneuvers to establish and maintain a positive opening rate while the vehicle is inside the AS and not re-enter the AS, with the exception of fly around or port relocation.

Rationale: Positive opening rate ensures HLS will not pose hazard to Gateway should it fail to complete maneuvers for departure. It also simplifies visual monitoring by the crew during departure in proximity to the Gateway.

HLS-GW-0123 Contingency Free-Drift
The HLS shall maintain critical systems and be able to perform a contingency undocking, separation, and departure from the Gateway for up to 30 minutes (TBR) beyond the nominal docking sequence while the Gateway and the HLS are in free drift and capture has occurred but hard mate cannot be completed.

Rationale: HLS will need to disengage and depart if docking mechanism cannot achieve hard-mate.

HLS-GW-0124 Free Flight Structural Clearance
The HLS shall remain at least 2 m (6.56 ft) (TBR) away from Gateway during free flight operations, unless the distance between the docking port interfaces on the Gateway and HLS is less than 2 m (6.56 ft) (TBR).

Rationale: For collision avoidance, minimum clearance between the structure of HLS and the target should be defined.

Structural safety clearance has an impact on the HLS design. Agreeing on clearances early on, contributes to reducing the development cost of the HLS.

HLS-GW-0125 Free Flight Appendage Structural Clearance
The HLS shall keep appendages at least 610 mm (2 ft) away from Gateway during free flight operations, when the distance between the docking port interfaces on the Gateway and HLS is less than 2 m (6.56 ft) until contact.

Rationale: Structural safety clearance has an impact on the HLS's design. Agreeing on clearances early on, contributes to reducing the development cost of the HLS.

Need to consider appendages that may pose contact risk to Gateway prior to and at docking mechanism capture. The concern is to address docking mechanism soft capture platform motion and how the volumetric sweep of the HLS does not intersect with Gateway. Appendages such as antennas and thermal covers are primary risk items.

HLS-GW-0126 Redundant Range and Range Rate
While uncrewed, the HLS shall provide a redundant, independent and dissimilar means of determining range and range rate relative to the Gateway for approach within the AS, to be used in onboard fault detection, isolation, and recovery (FDIR) and to be transmitted to Mission Control and Gateway.

Rationale: The redundant range and range-rate data from the HLS will be used by the target spacecraft crew (when applicable) to cross check the relative navigation data, and to trigger a CAM if needed.

HLS-GW-0127 Redundant Relative State Solution
While uncrewed, the HLS shall provide a redundant, independent and dissimilar means of determining relative state to the Gateway for approach within the KOS, to be used in onboard FDIR and to be transmitted to Mission Control and Gateway.

Rationale: The redundant relative navigation data from the HLS will be used by the target spacecraft crew (when applicable) to cross check the relative navigation data, and to trigger a CAM if needed.

HLS-GW-0128 Relative State Reference
The HLS shall transmit relative position and velocity data sets with different reference points as follows:

• Relative position/velocity between the COMs of the HLS and the Gateway expressed in a Gateway-centered, Sun-referenced local vertical, local horizonal (LVLH) frame (refer to Section 3.2.1.2.1).
• Relative position/velocity between mechanical interface points expressed in the Gateway docking/berthing frame. Mechanical interface points will be as follows:
• (For docking) the origins of the docking mechanism's Soft Capture System onboard the vehicles.
• (For berthing) the capture point and the origin of the grapple fixture onboard the HLS.
Rationale: The relative navigation data from the HLS will be used by the Gateway crew (when applicable) for monitoring, to cross check the Gateway's own relative navigation data, as well as used to trigger a CAM if needed.

HLS-GW-0129 Relative Attitude Reference
Prior to and during docking, automated capture/berthing, undocking and separation operations, the HLS shall transmit relative attitude as a quaternion representing the rotation of the HLS docking frame with respect to the Gateway docking frame.
Rationale: The relative navigation data from the HLS will be used by the Gateway crew (when applicable) for monitoring, to cross check the Gateway's own relative navigation data, as well as used to trigger a CAM if needed.

HLS-GW-0130 Relative Angular Rate Reference
The HLS shall express relative angular rate as the rotation rate of each axis of the HLS docking frame with respect to each axis of the Gateway docking frame.
Rationale: The relative navigation data from HLS will be used by the Gateway crew (when applicable) for monitoring, to cross check the Gateway's own relative navigation data, as well as used to trigger a CAM if needed.

HLS-GW-0131 Flight Mode Telemetry
The HLS shall transmit flight mode information to the Gateway.
Rationale: HLS's flight mode will be provided to the target vehicle and used for monitoring and go/no-go decisions.
In order to avoid confusion and misunderstanding, definition of the HLS flight mode provided to the target vehicle needs to be common across all platforms/vehicles.

HLS-GW-0132 Display Received Status Telemetry
The HLS shall display status information received from the Gateway as shown in the HLS (VV) to Gateway ICD.
Rationale: Gateway status data can be used by HLS to determine if safe to proceed.

HLS-GW-0133 Display Transmitted Status Telemetry
The HLS shall display status information transmitted to the Gateway as shown in the HLS (VV) to Gateway ICD.
Rationale: HLS status telemetry used by Gateway to monitor incoming HLS's health and ability to complete RPOD. Primarily function is for Gateway crew to monitor

incoming HLS, but could be used by Gateway VSM for monitoring and relaying to ground.

HLS-GW-0134 Approach Monitoring by Crew
The HLS shall provide relative motion monitoring for the HLS crew from AS entry through HLS docking/capture.
Rationale: The monitoring will ensure relative motion safety for all maneuvers even beyond nominally required fault tolerance.

HLS-GW-0135 Departure Monitoring by Crew
The HLS shall provide relative motion monitoring for the HLS crew from HLS undocking/separation/release through AS exit.
Rationale: The monitoring will ensure relative motion safety for all maneuvers even beyond nominally required fault tolerance.

HLS-GW-0137 Command Response
While uncrewed, The HLS shall provide feedback to the Gateway of command status (accepted or rejected).
Rationale: Acknowledgement of command receipt can alert Gateway if command needs to be resent, or if there is an underlying issue with VV.

HLS-GW-0139 Visual Monitor Pointing
The HLS shall provide visual monitoring along the docking centerline and view of the docking axis.
Rationale: HLS camera view will encompass the centerline docking target (CDT). Spacecraft alignment errors may be introduced if camera is not centerline mounted, and viewing of the CDT shows lateral/angular offsets.

HLS-GW-0141 Targeting Safe Free Drift Trajectory
Prior to AI and during re-rendezvous, the HLS shall target trajectories such that the targeted maneuvers and related free drift trajectories stay outside of the AS for a minimum of 24 hours (TBR).
Rationale: In order to ensure the target vehicle safety, specifying a 24-hour safe free drift trajectory will require analysis that HLS will not collide with target vehicle if there are failures rendering the vehicle inoperable.

3.9 Safety Interface Requirements

3.9.1 Natural and Induced Environments

HLS-GW-0009 Provide for Induced Environments
The HLS shall meet all safety, performance, utilization, and mission objectives during and after exposure to the induced environments.

Rationale: The HLS needs to operate through the induced environments imparted by Gateway. Examples include EMI, loads, plume impingement, crew kick loads, and contamination. In turn, HLS needs to constrain induced environments imparted to Gateway such as plume loads, docking loads, and loads while docked.

3.9.2 Crew Human Interface

HLS-GW-0142 Distinct Visual Indications for Caution and Warning
The HLS shall provide distinct visual indications for Emergency, Warning, Caution, and Advisory alert classes for alerts from Gateway.

Rationale: Many off-nominal events require immediate crew action to maintain safety and ensure mission success. Common caution and warning annunciations/indications for these events reduce training needs and the potential for errors during critical events.

HLS-GW-0143 Distinct Auditory Annunciations for Caution and Warning
The HLS shall provide distinct audio annunciations for Emergency, Warning, Caution, and Advisory alert classes for alerts from Gateway.

Rationale: Off-nominal events are usually divided into classes (e.g., emergencies, warnings, cautions, and advisories). The use of distinct auditory annunciations for each of the event classes will simplify training and user comprehension. The use of both visual and auditory sensory modalities is required for redundancy.

HLS-GW-0144 Display Format Standards
The HLS shall have a graphical user interface that is compatible with Gateway's graphical user interface (GUI) standards (TBS).

Rationale: Crew training across programs is maintained low by use of commonality of use of GUI design, layouts, color, etc.

3.10 Reliability Interface Requirements

Forward Work.

3.11 Maintainability Interface Requirements

Forward Work.

4 INTERFACE REQUIREMENTS VERIFICATION

Each interface requirement defined in Section 3.2 of this IRD shall be verified prior to the launch of the interfacing entities, unless otherwise specified, at the appropriate system/module level.
Section 4 defines the criteria for the sharing of responsibilities for the performance of the Verification Program, as well as the verification methods, procedures, and success criteria to be complied with during the verification process. It also assigns verification responsibilities, as appropriate, to each IRD Partner for the applicable portion of the Interface design.

4.1 Responsibilities

It is the responsibility of each interfacing element to establish and control the traceability between each of the Interface Requirements defined in this IRD and the corresponding design implementation data, as documented in the relevant ICD.
The Agency responsible for the design of the hardware or software which represents a mating side of the interface to be verified, is responsible for the verification that their own system/module is in compliance with the interface requirements established in the IRD, and that the “as built” status is in compliance with the associated ICD.
In the event stand−alone verification of each of the two mating parts of an interface is not sufficient and that active participation from the other Partner is necessary to fully verify the compliance with the IRD requirements, both Agencies are jointly responsible for the successful completion of interface verification. Joint participation activities are defined in the Bilateral Verification Plan (BIVP).

4.2 Terminology

The following methods are defined and shall be used to qualify the system:
a. Verification by inspection is the physical evaluation of equipment and/or documentation to verify design artifacts. Inspection is used to verify construction features, workmanship, and physical dimensions and condition (such as cleanliness, surface finish, and locking hardware). For example, “The Placard shall be Red.” can be verified by inspection.
b. Verification by analysis is a process used in lieu of (or in addition to) testing and inspection. Analysis techniques may include statistics and qualitative analysis, computer and hardware simulations, and computer modeling. Analysis should be used only when all of the following conditions apply: (1) rigorous and accurate analysis is possible, (2) verification by test is not feasible or cost effective, and (3) verification by inspection is not adequate. When conducting Verification by Analysis, the models, simulations, and analysis tools must be accredited by the Program and Element/Modules to certify appropriate fidelity and software development quality. The accreditation authority ensures that the tools have sufficient pedigree to provide usable information for decision-making, at the level of criticality required.
c. Verification by demonstration is the actual operation of flight or ground equipment or teams to evaluate its functional performance and/or its interfaces to other equipment or teams. The primary distinction between demonstration and test is that demonstrations provide qualitative results, whereas tests provide quantitative results.
d. Verification by test is the actual operation of flight, flight-like, and/or ground equipment with the necessary test support equipment and test environment. Test also applies to hardware or software verifications done on flight like systems in test facilities such as a System Integration Laboratory (SIL) and a Multi-element Integration Test (MEIT) lab.
e. Audit is a method that is satisfied at lower levels of organization by an accredited entity. The audit will simply confirm that the child requirements have been fully verified and that the verification of all lower level requirements fully satisfies the parent

requirement. If the audit requires additional analysis to complete, it should be verified by analysis.

5 APPENDIX A - ACRONYM LIST

AI	Approach Initiation
AS	Approach Sphere
ATP	Authority to Proceed
BAG	Bandwidth Allocation Gap
BER	Bit Error Rate
BIVP	Bilateral Verification Plan
BP	Bundle Protocol
CAM	Collision Avoidance Maneuver
CCSDS	Consultative Committee for Space Data Systems
CDT	Centerline Docking Target
CO2	Carbon Dioxide
COM	Compression Master
COTS	Commercial Off-the-Shelf
CPIT	Cross Program Integration Team
DOORS	Dynamic Object Oriented Requirements System
DST	Deep Space Transport
DTN	Delay Tolerant Networking
DWE	Direct-with-Earth
E3	Electromagnetic Environmental Effects
EM	Electromagnetic Compatibility
EMI	Electromagnetic Interference
EPS	Electrical Power Supply
EVA	Extra-Vehicular Activity
FDIR	Fault Detection, Isolation, and Recovery
FEC	Forward Error Correction
FER	Frame Error Rate
GNC	Guidance, Navigation & Control
GUI	Graphical User Interface
HLS	Human Landing System
IASIS	International Avionics System Interoperability Standard
ICD	Interface Control Document
ICSIS	International Communication System Interoperability Standard
IDD	Interface Definition Document
IDS	International Docking System
IDSS	International Docking System Standard
IMV	Inter-Module Ventilation
IOAG	Interagency Operations Advisory Group
IP	Internet Protocol

IPE	Internet Protocol Extension
IRD	Interface Requirements Document
ISS	International Space Station
ITU	International Telecommunications Union
KOS	Keep Out Sphere
LCAWG	Lunar Communications Architecture Working Group
LDPC	Low-Density Parity-Check
LRU	Least Recently Used
LVLH	Local Vertical, Local Horizontal
MAC	Media Access Control
MEIT	Multi-Element Integration Test
NIC	Network Interface Controller
ODN	Onboard Data Network
OSHA	Occupational Safety and Health Association
PA	Passive Abort
PDTU	Power/Data Transfer Umbilical
RC	Rate Constrained
RF	Radio Frequency
RPODU	Rendezvous, Proximity Operations, Docking, and Undocking
SANA	Space Assigned Number Authority
SEU	Single Event Upset
SFCG	Space Frequency Coordination Group
SI	International System of Units
SIL	System Integration Laboratory
SMAC	Spacecraft Maximum Allowable Concentrations
TBD	To Be Determined
TBR	To Be Resolved
TBS	To Be Supplied
TDMA	Time-Division Multiple Access
TTE	Time-Triggered Ethernet
VV	Visiting Vehicle

6 APPENDIX B - CROSS SECTION IMAGES OF GATEWAY / ORION CONFIGURATION

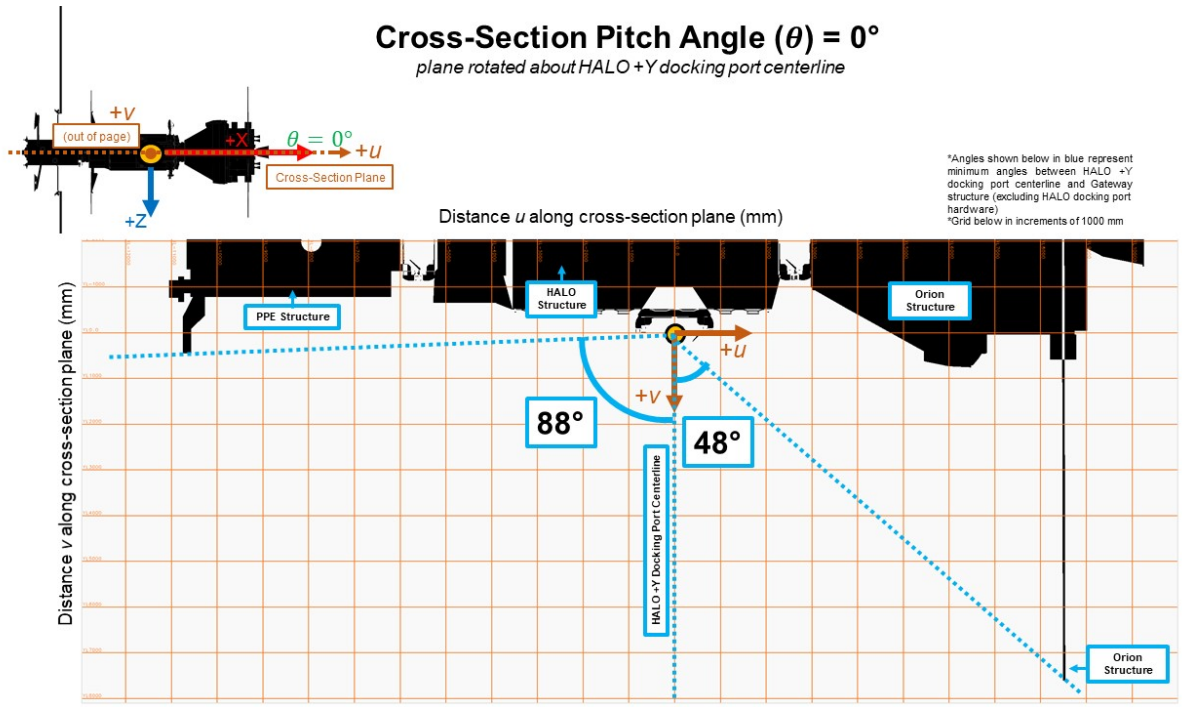
Cross-Section Pitch Angle (θ) = 0°
plane rotated about HALO +Y docking port centerline
+v
(out of page)
+X
θ = 0°
+u
Cross-Section Plane
+Z
*Angles shown below in blue represent minimum angles between HALO +Y docking port centerline and Gateway structure (excluding HALO docking port hardware)
*Grid below in increments of 1000 mm
Distance u along cross-section plane (mm)
Distance v along cross-section plane (mm)
PPE Structure
HALO Structure
Orion Structure
+u
+v
88°
48°
HALO +Y Docking Port Centerline
Orion Structure

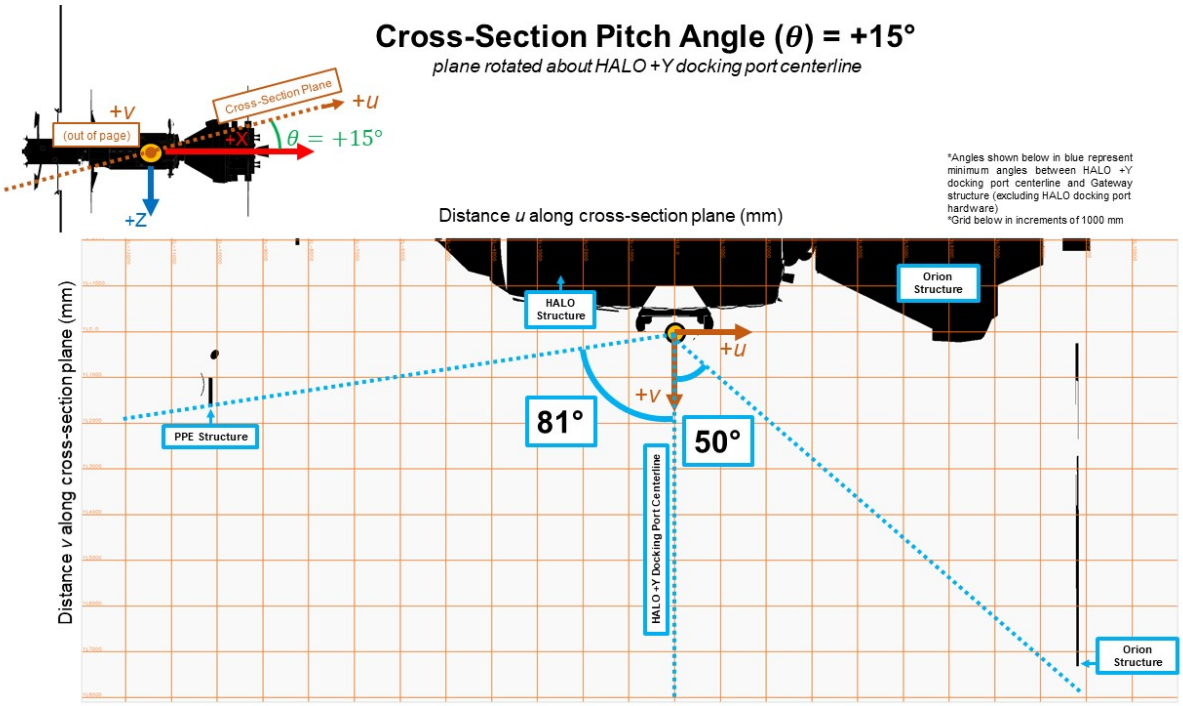
Cross-Section Pitch Angle (θ) = +15°
plane rotated about HALO +Y docking port centerline
+v
(out of page)
Cross-Section Plane
+u
+X
θ = +15°
+Z
*Angles shown below in blue represent minimum angles between HALO +Y docking port centerline and Gateway structure (excluding HALO docking port hardware)
*Grid below in increments of 1000 mm
Distance u along cross-section plane (mm)
Distance v along cross-section plane (mm)
HALO Structure
Orion Structure
+u
+v
PPE Structure
81°
50°
HALO +Y Docking Port Centerline
Orion Structure

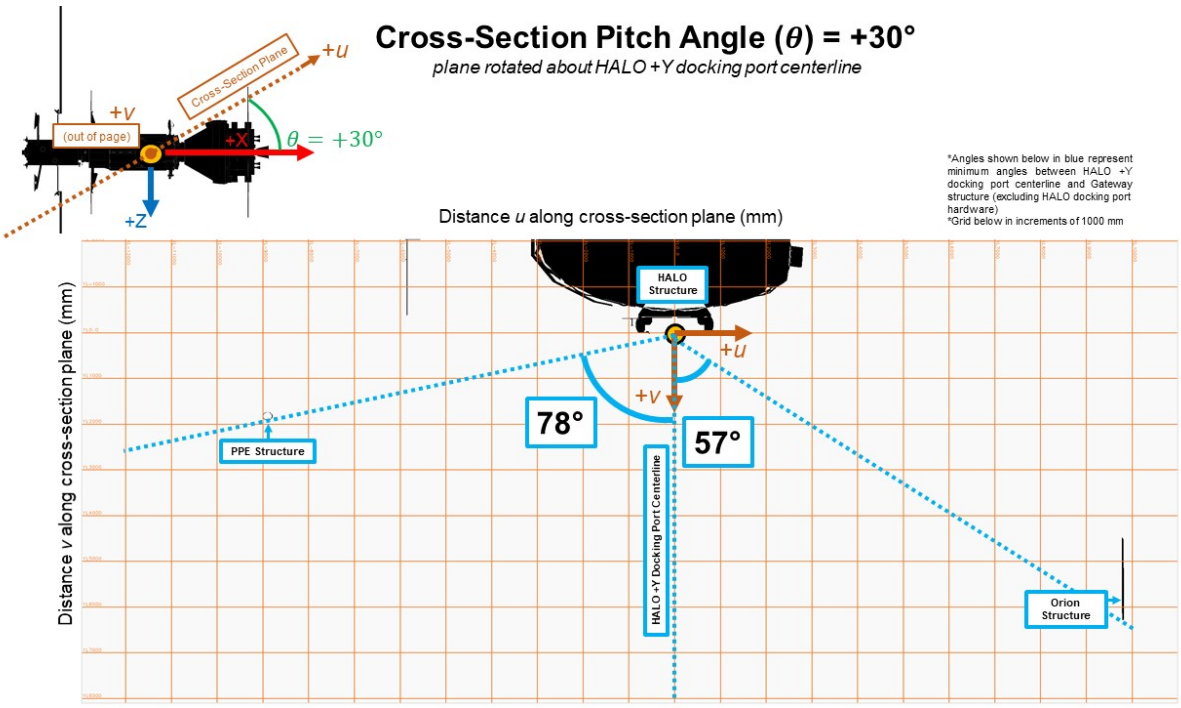
Cross-Section Pitch Angle (θ) = +30°
plane rotated about HALO +Y docking port centerline
Cross-Section Plane
+u
+v
(out of page)
+X
θ = +30°
+Z
*Angles shown below in blue represent minimum angles between HALO +Y docking port centerline and Gateway structure (excluding HALO docking port hardware)
*Grid below in increments of 1000 mm
Distance u along cross-section plane (mm)
Distance v along cross-section plane (mm)
HALO Structure
+u
+v
78°
57°
PPE Structure
HALO +Y Docking Port Centerline
Orion Structure

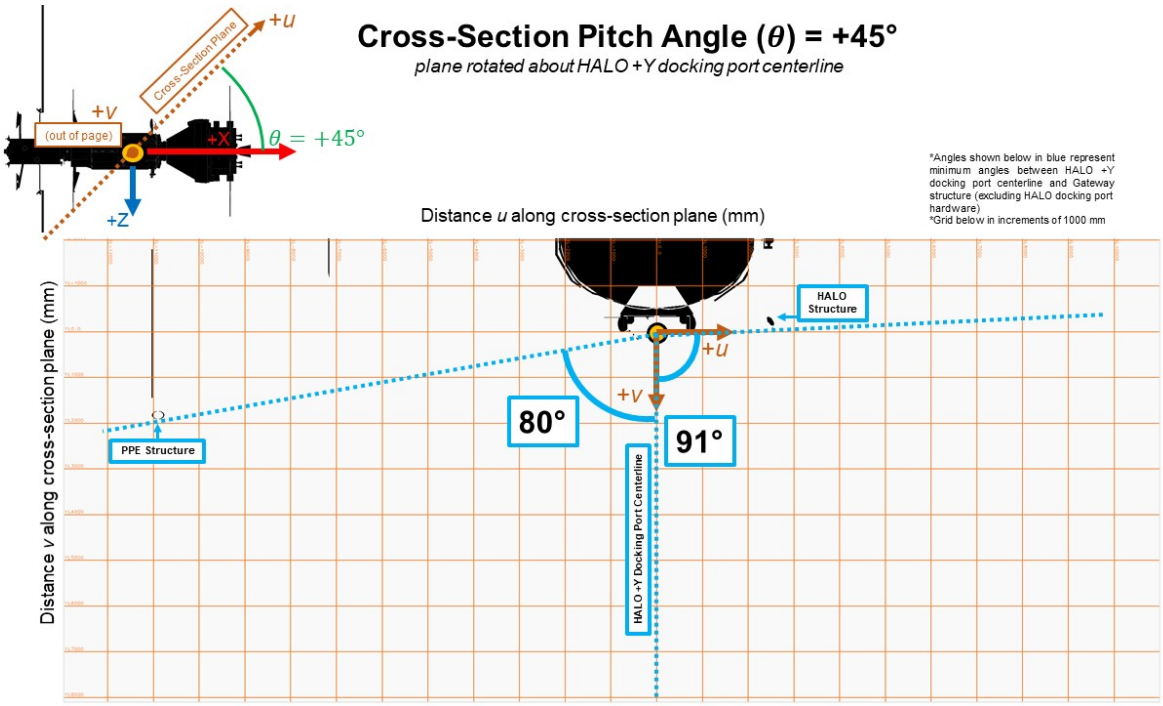
Cross-Section Pitch Angle (θ) = +45°
plane rotated about HALO +Y docking port centerline
Cross-Section Plane
+u
+v
(out of page)
+X
θ = +45°
+Z
*Angles shown below in blue represent minimum angles between HALO +Y docking port centerline and Gateway structure (excluding HALO docking port hardware)
*Grid below in increments of 1000 mm
Distance u along cross-section plane (mm)
Distance v along cross-section plane (mm)
HALO Structure
+u
+v
80°
91°
PPE Structure
HALO +Y Docking Port Centerline

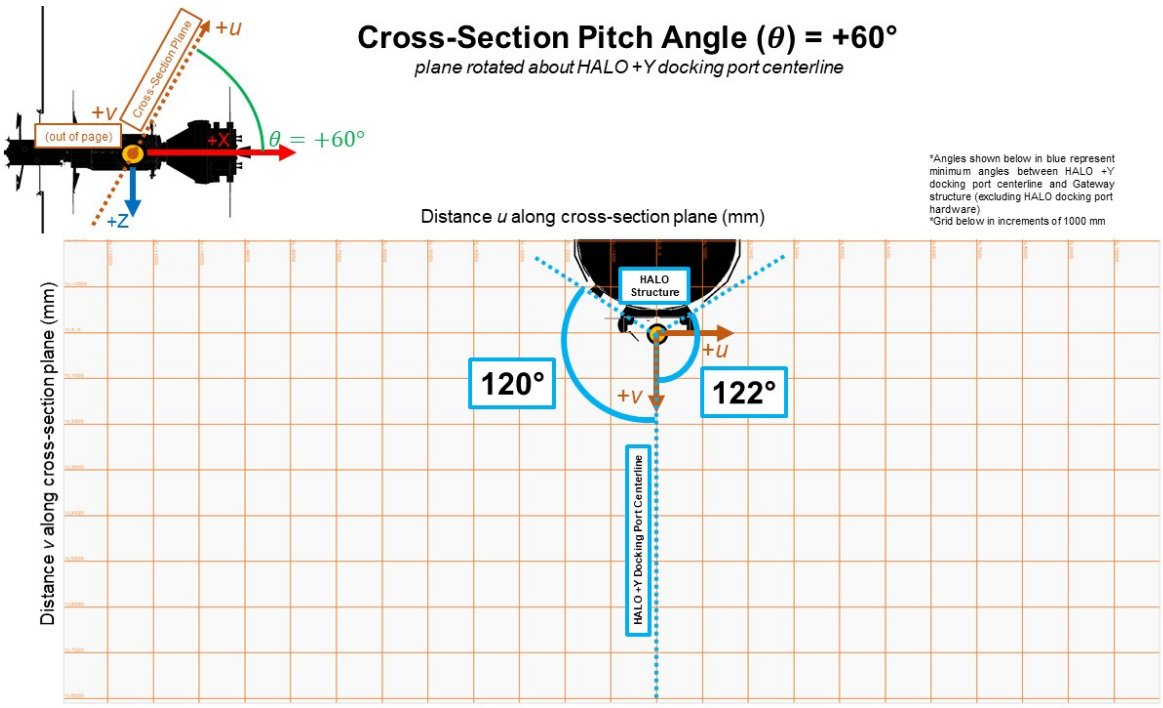
Cross-Section Pitch Angle (θ) = +60°
plane rotated about HALO +Y docking port centerline
+u
Cross-Section Plane
+v
(out of page)
+X
$\theta = +60°$
+Z
*Angles shown below in blue represent minimum angles between HALO +Y docking port centerline and Gateway structure (excluding HALO docking port hardware)
*Grid below in increments of 1000 mm
Distance u along cross-section plane (mm)
Distance v along cross-section plane (mm)
HALO Structure
+u
120°
+v
122°
HALO +Y Docking Port Centerline

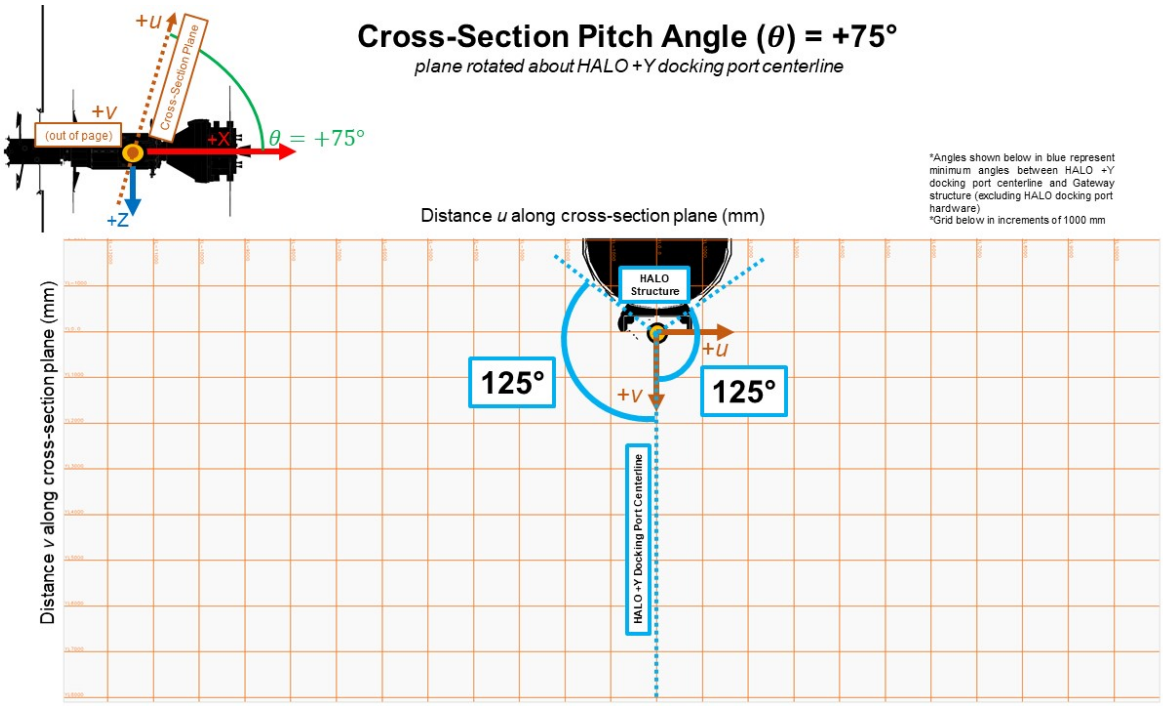
Cross-Section Pitch Angle (θ) = +75°
plane rotated about HALO +Y docking port centerline
+u
Cross-Section Plane
+v
(out of page)
+X
$\theta = +75°$
+Z
*Angles shown below in blue represent minimum angles between HALO +Y docking port centerline and Gateway structure (excluding HALO docking port hardware)
*Grid below in increments of 1000 mm
Distance u along cross-section plane (mm)
Distance v along cross-section plane (mm)
HALO Structure
+u
125°
+v
125°
HALO +Y Docking Port Centerline

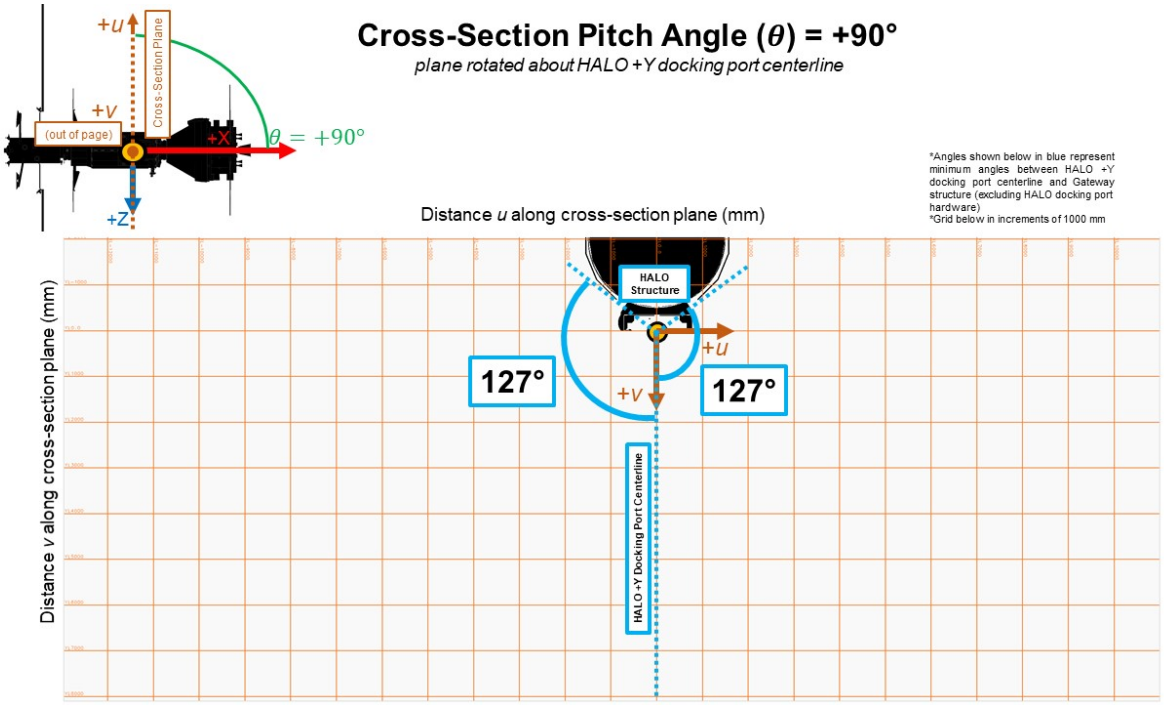
Cross-Section Pitch Angle (θ) = +90°
plane rotated about HALO +Y docking port centerline
+u
Cross-Section Plane
+v
(out of page)
+X
$\theta = +90°$
+Z
*Angles shown below in blue represent minimum angles between HALO +Y docking port centerline and Gateway structure (excluding HALO docking port hardware)
*Grid below in increments of 1000 mm
Distance u along cross-section plane (mm)
Distance v along cross-section plane (mm)
HALO Structure
127°
127°
+u
+v
HALO +Y Docking Port Centerline

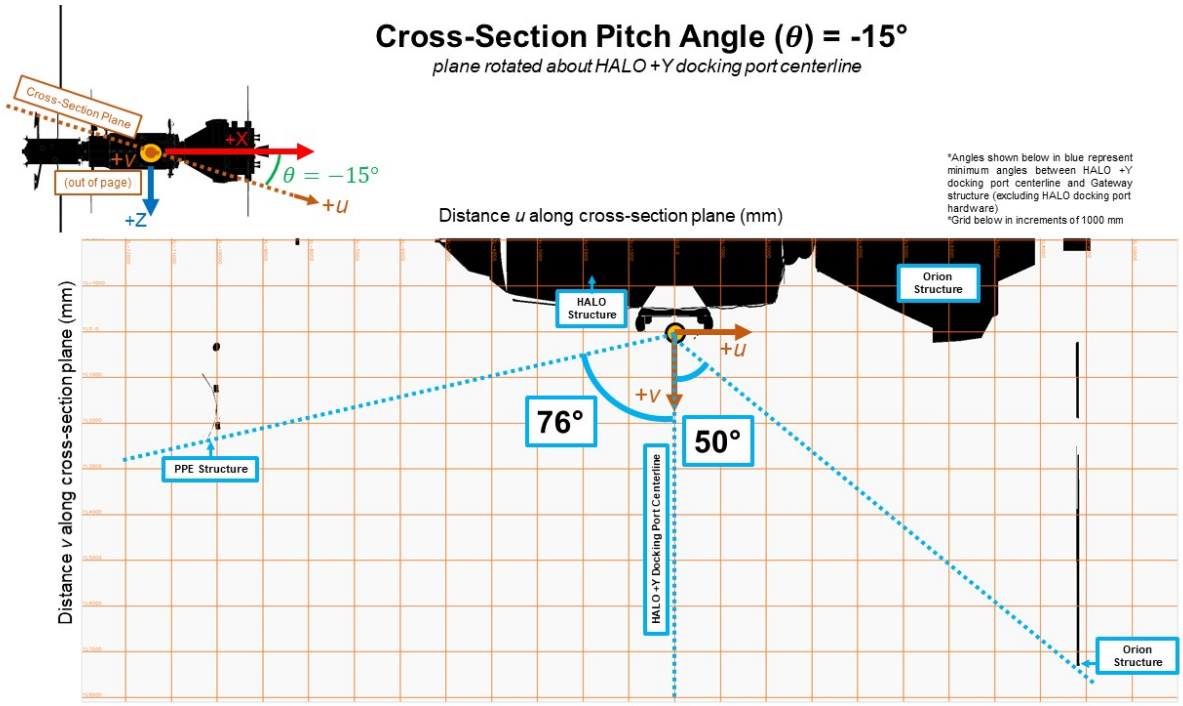
Cross-Section Pitch Angle (θ) = -15°
plane rotated about HALO +Y docking port centerline
Cross-Section Plane
+v
+X
(out of page)
+Z
$\theta = -15°$
+u
*Angles shown below in blue represent minimum angles between HALO +Y docking port centerline and Gateway structure (excluding HALO docking port hardware)
*Grid below in increments of 1000 mm
Distance u along cross-section plane (mm)
Distance v along cross-section plane (mm)
HALO Structure
Orion Structure
+u
+v
76°
50°
PPE Structure
HALO +Y Docking Port Centerline
Orion Structure

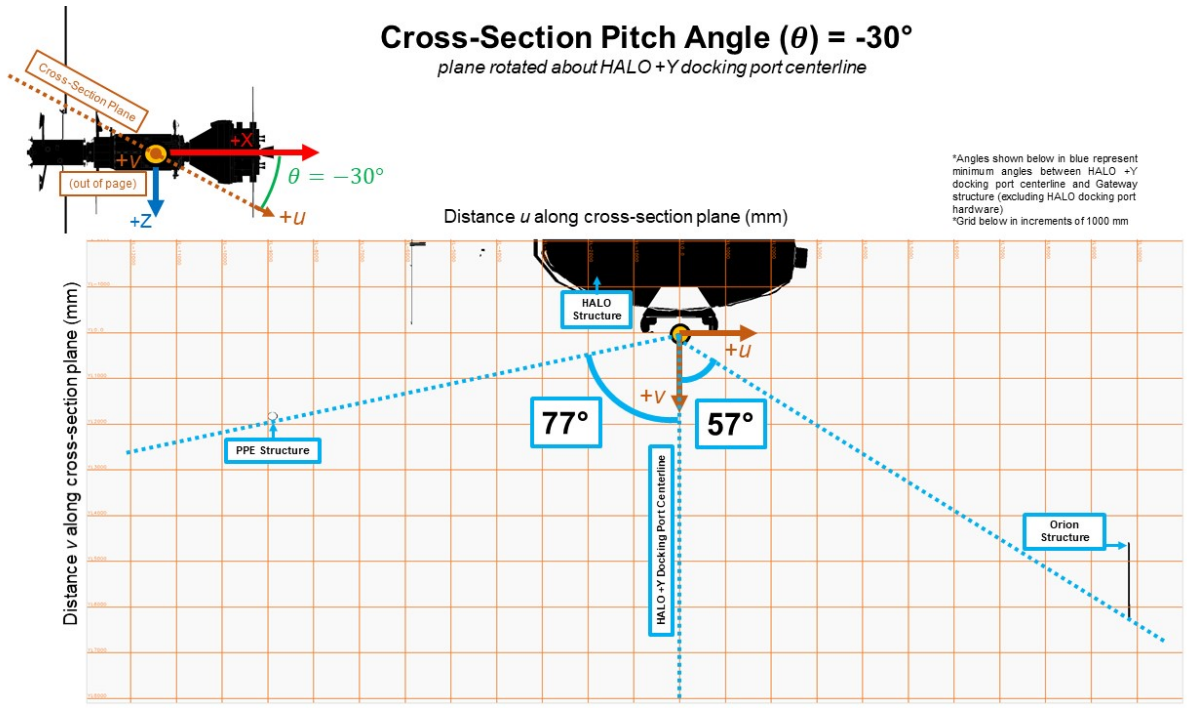
Cross-Section Pitch Angle (θ) = -30°
plane rotated about HALO +Y docking port centerline
Cross-Section Plane
+X
+V
(out of page)
+Z
+u
$\theta = -30°$
*Angles shown below in blue represent minimum angles between HALO +Y docking port centerline and Gateway structure (excluding HALO docking port hardware)
*Grid below in increments of 1000 mm
Distance u along cross-section plane (mm)
Distance v along cross-section plane (mm)
HALO Structure
+u
+v
77°
57°
PPE Structure
HALO +Y Docking Port Centerline
Orion Structure

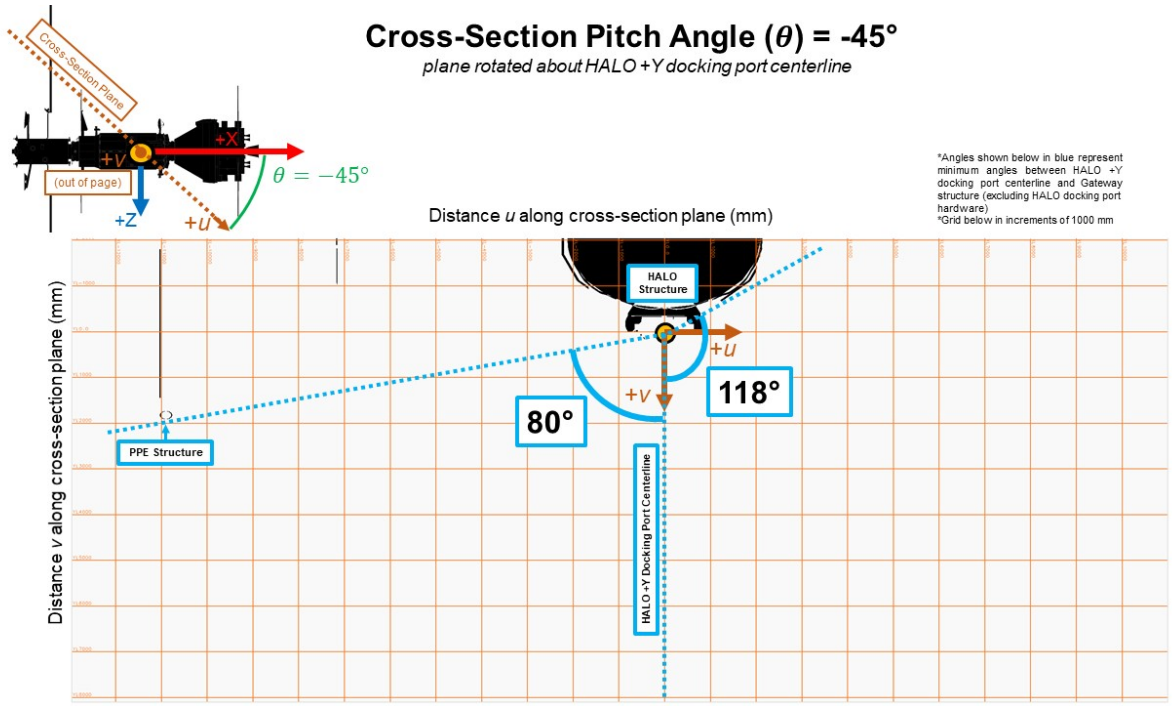
Cross-Section Pitch Angle (θ) = -45°
plane rotated about HALO +Y docking port centerline
Cross-Section Plane
+X
+V
(out of page)
+Z
+u
$\theta = -45°$
*Angles shown below in blue represent minimum angles between HALO +Y docking port centerline and Gateway structure (excluding HALO docking port hardware)
*Grid below in increments of 1000 mm
Distance u along cross-section plane (mm)
Distance v along cross-section plane (mm)
HALO Structure
+u
+v
118°
80°
PPE Structure
HALO +Y Docking Port Centerline

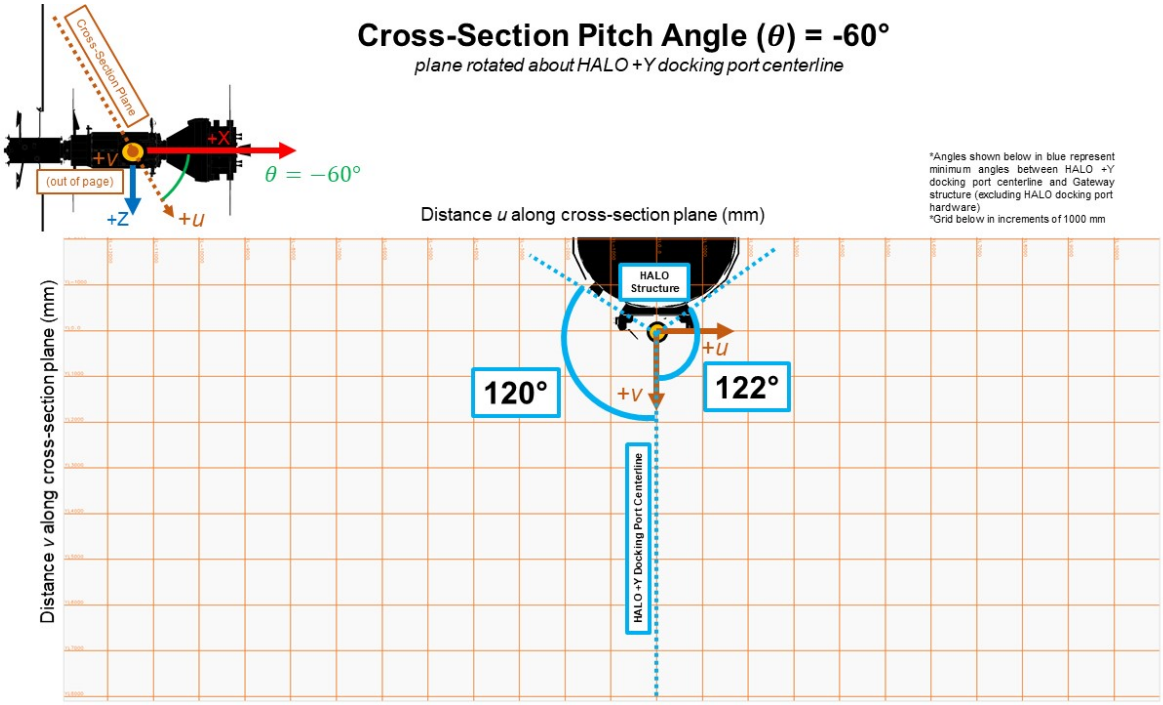
Cross-Section Pitch Angle (θ) = -60°
plane rotated about HALO +Y docking port centerline
Cross-Section Plane
+X
+V
(out of page)
+Z
+u
$\theta = -60°$
*Angles shown below in blue represent minimum angles between HALO +Y docking port centerline and Gateway structure (excluding HALO docking port hardware)
*Grid below in increments of 1000 mm
Distance u along cross-section plane (mm)
Distance v along cross-section plane (mm)
HALO Structure
+u
+v
120°
122°
HALO +Y Docking Port Centerline

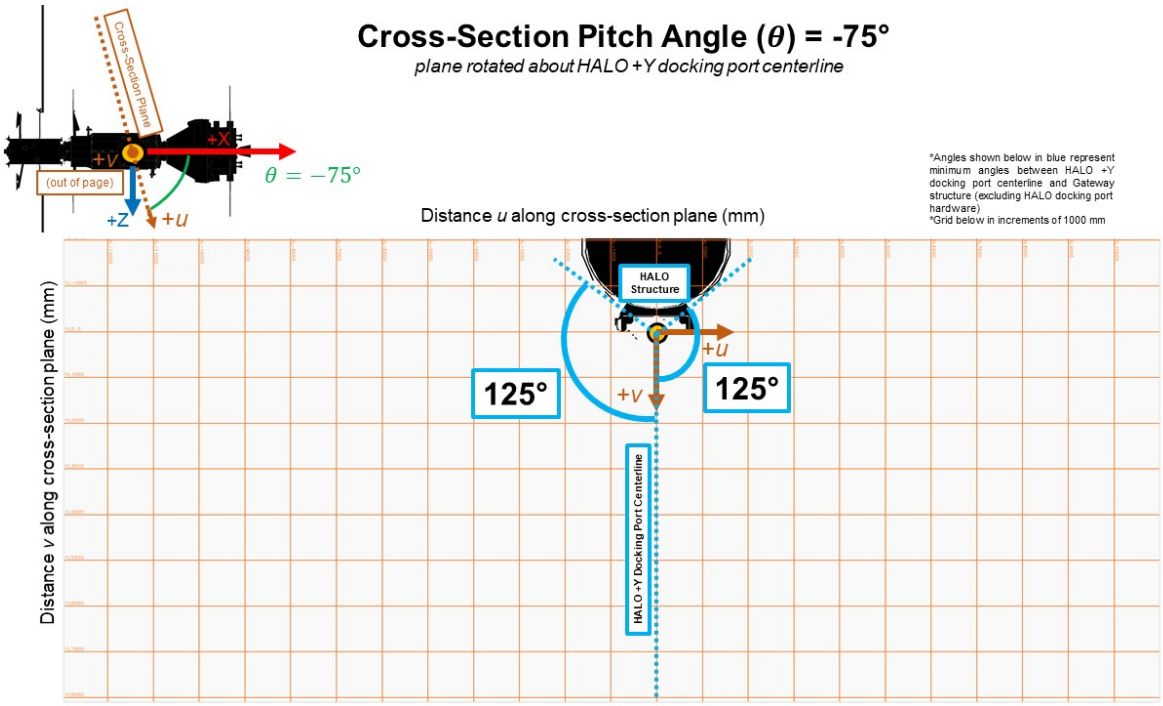
Cross-Section Pitch Angle (θ) = -75°
plane rotated about HALO +Y docking port centerline
Cross-Section Plane
+X
+V
(out of page)
+Z
+u
$\theta = -75°$
*Angles shown below in blue represent minimum angles between HALO +Y docking port centerline and Gateway structure (excluding HALO docking port hardware)
*Grid below in increments of 1000 mm
Distance u along cross-section plane (mm)
Distance v along cross-section plane (mm)
HALO Structure
+u
+v
125°
125°
HALO +Y Docking Port Centerline