National Aeronautics and
Space Administration

EVA-EXP-0070

DRAFT

EFFECTIVE DATE: SEPT 23, 2019

HUMAN LANDING SYSTEM EVA COMPATIBILITY IRD

DRAFT

Document does not contain export controlled technical data

REVISION AND HISTORY PAGE

Revision No.	Change No.	Description	Release Date
Draft		Initial Release Draft for HLS BAA Appendix H	08-15-19
Draft		Revised Draft - Still requires EVA CR and associated technical reviews	09-23-19

DRAFT

TABLE OF CONTENTS

SECTION **PAGE**

1.0 INTRODUCTION 9
1.1 PURPOSE 9
1.2 SCOPE 9
1.3 CONVENTIONS AND NOTATIONS 10
1.3.1 Shall Statements (Requirements) 10
1.3.2 Requirement Identification 11
1.3.3 Rationale 11
1.3.4 Units 11
1.4 CHANGE AUTHORITY/RESPONSIBILITY 11
1.5 WORKMANSHIP 11
2.0 DOCUMENTS 12
2.1 APPLICABLE DOCUMENTS 12
2.2 REFERENCE DOCUMENTS 12
2.3 ORDER OF PRECEDENCE 14
3.0 REQUIREMENTS 15
3.1 CLEARANCES 15
3.1.1 Translation Path Hardware Protrusion 15
3.1.2 Tool Interface Clearance 16
3.1.3 Bolt Clearance 17
3.1.4 Gloved-Hand Clearance 17
3.1.5 Handrail/Handhold Mounting Clearance 18
3.1.6 Handrail/Handhold Side Clearance 19
3.1.7 APFR EVA Installation/Removal Clearance (when Docked in lunar orbit) - 20
3.2 TRANSLATION 21
3.2.1 Continuous EVA Translation Path (when docked in lunar orbit) 21
3.2.2 Translation Path 21
3.2.3 Incapacitated Crewmember Interfaces 21
3.2.4 EVA Contact Hazards Preclusion Beyond Translation Corridor 21
3.3 EVA HANDLING 22

DRAFT

3.3.1 EVA Handling Features 22
3.3.2 Unpressurized Hatch Transfer Constraint (when docked in lunar orbit) 23
3.3.3 xEMU Pressurized Transfer Hatch - Microgravity.....23
3.3.4 EVA Lunar Hatch Dimensions.....24
3.3.5 EVA Secondary Ingress Method - Microgravity.....24
3.3.6 Handling Alignment Criteria.....24
3.3.7 Manual Locking Features.....25
3.3.8 EVA Gloved Hand Compatibility.....27
3.3.9 Grip Surface.....27
3.3.10 Unique Labeling.....27
3.3.11 Hand Tools.....28
3.3.12 EVA Actuated Controls.....29
3.3.13 EVA Handrails/Handholds.....29
3.4 WORKSITE OUTFITTING.....34
3.4.1 Worksite Mobility.....34
3.4.2 Worksites.....35
3.4.3 Worksite Restraints.....36
3.4.4 Dedicated EVA Worksite - Microgravity.....37
3.4.5 Robotic Assisted EVA Worksites.....37
3.4.6 Free-Float Worksites - Microgravity.....37
3.4.7 Installation of Passive Worksite Interface Sockets.....37
3.4.8 Foot Restraint Ingress/Egress Aids.....38
3.4.9 Visual Contrast at Worksite.....39
3.5 LOADS 40
3.5.1 Tether Attach Points.....40
3.5.2 Microgravity EVA Crew-Induced Loads.....41
3.5.3 Partial Gravity EVA Crew-Induced Loads.....46
3.5.4 EVA Actuated Loads.....46
3.5.5 Handhold/Handrail Torsional Loading.....48
3.5.6 WIF Structural Loading.....48
3.6 CONNECTORS.....49

DRAFT

3.6.1 One-Handed EVA Operable Connectors 50
3.6.2 Connector Accessibility 50
3.6.3 Gloved-Hand Connector Accessibility 50
3.6.4 Connector Spacing 50
3.6.5 Incorrect Connector Mating Prevention 51
3.6.6 Connector Coding 51
3.6.7 Connector Protective Caps 52
3.6.8 Connector Rotational Travel 52
3.6.9 Connector Locking Feature 52
3.6.10 Visible Connector Alignment Markings 52
3.6.11 Connector Locking Ring 53
3.6.12 Connector Mating Status 53
3.6.13 Connector Ultimate Load 53
3.6.14 Electrical Connectors 53
3.6.15 Fluid Connectors 55
3.7 EVA OPERABLE FASTENERS 56
3.8 HARDWARE DESIGN 65
3.8.1 Fastener Drive Height 65
3.8.2 Battery Powered Devices 65
3.8.3 Common Tools and Fasteners 66
3.8.4 Cable Routing/Restraint 67
3.8.5 Cable Routing Spacing 67
3.8.6 Paint 67
3.9 SAFETY 67

DRAFT

3.9.1 Failure Tolerance....67
3.9.2 Hazardous Material Control....68
3.9.3 Venting of Hazardous Materials....68
3.9.4 Emitted Radiation....69
3.9.5 Lasers....69
3.9.6 Electrical and Safety Design....69
3.9.7 Shock Protection....70
3.9.8 Operation During Pressure Change....70
3.9.9 Component Hazardous Energy Provision....70
3.9.10 Detachable Parts....70
3.9.11 Touch Temperatures....71
3.9.12 xEMU Glove Palm External Touch-Temperature Compliance....72
3.9.13 Incidental and Continuous Contact Heat Transfer Rates....74
3.9.14 Sharp Edge Protection....75
3.9.15 Screws and Bolts....77
3.9.16 Levers, Cranks, Hooks, and Controls....77
3.9.17 Burrs....78
3.9.18 Exposed Holes or Slots....78
3.9.19 Pinch Hazard Protection....78
3.9.20 Entrapment Hazard....79
3.9.21 Protection from Moving or Rotating Equipment....79
3.9.22 Emergency Ingress Capability....79
3.9.23 Connector Cleanliness Level....80
3.9.24 External Surface Cleanliness Level....80
3.9.25 Tethering / Restraint....80
3.9.26 Crew Safety Tether Attachment....81
3.9.27 Handhold/Handrail Color....81
3.9.28 Manual Overrides....81
3.9.29 Hardware Removed/Replaced by EVA....81
3.9.30 Entanglement, Cable Clamps, Ducts, or Retractors....82
3.10 ENVIRONMENTS....82
3.10.1 Magnetic Field Limit....82
3.10.2 Hardware Compatibility with xEMU Suit EMI....82
3.10.3 Voltage Potential Discharge....83
4.0 VERIFICATION....84
4.1 VERIFICATION METHODS....84

DRAFT

4.1.1 Inspection....84
4.1.2 Analysis....84
4.1.3 Demonstration....85
4.1.4 Test....85
4.2 VERIFICATION CROSS MATRIX....85

APPENDIX

APPENDIX A ACRONYMS AND ABBREVIATIONS AND GLOSSARY OF TERMS 93
APPENDIX B EVA BEST PRACTICES....100
APPENDIX C NON-EVA REQUIREMENTS AND BEST PRACTICES FOR CONSIDERATIONS....106
APPENDIX D COMMON TOOLS....108
APPENDIX E RESERVED....125
APPENDIX F OPEN WORK....126
APPENDIX G HUMAN LANDING SYSTEM APPLICABILITY MATRIX....131

TABLE

TABLE 3.3.1-1 CONSTRAINTS FOR EVA TRANSPORT OF OBJECTS TABLE23
TABLE 3.3.6.5-1 SOFT DOCK FORCE....27
TABLE 3.5.2-1 MICROGRAVITY EVA-INDUCED LOADS....42
TABLE 3.5.3-1 PARTIAL GRAVITY EVA-INDUCED LOADS <TBD-HLS-EVA-006> 46
TABLE 3.5.3-1 MISCELLANEOUS ON−ORBIT CREW INDUCED LIMIT LOADS46
TABLE 3.5.4-1 WORST CASES DESIGN LOADING AT VEHICLE MOUNTING INTERFACE.... 48
TABLE 3.7.1.5.3-1 FASTENER TORQUE DATA <TBR-HLS-EVA-001>....62
TABLE 3.9.11-1 TOUCH TEMPERATURES....71
TABLE 3.9.12-1 30-MINUTE TOUCH TEMPERATURE COMPLIANCE FOR SMALL, HANDHELD HARDWARE....73
TABLE 3.9.12-2 30-MINUTE TOUCH TEMPERATURE HEAT RATE COMPLIANCE74
TABLE 3.9.13-1 HEAT TRANSFER RATES....74
TABLE 3.9.14-1 SHARP EDGE CRITERIA....75
TABLE 3.9.14-2 SNAG AND SHARP EDGE HAZARDS....76
TABLE 4.2-1 VERIFICATION CROSS MATRIX....85
TABLE A2.0-1 GLOSSARY OF TERMS....97
TABLE B-1 PIP PIN ACCEPTANCE VIBRATION TEST LEVELS....100
TABLE C-1 STANDARD INTERFACE TEMPERATURE DIFFERENTIAL....106
TABLE D.1.0-1 MECHANICAL TOOLING....109

DRAFT

TABLE D.1.0.1-1 MECHANICAL TOOLING RATIONALE 111
TABLE D.2.0-1 ELECTRICAL TOOLING 113
TABLE D.2.0.1-1 ELECTRICAL TOOLING RATIONALE 113
TABLE D.3.1 FLIGHT FASTENERS 115
TABLE D.3.2 GROUND TESTING FASTENERS 117
TABLE D.4.1.1-1 EVATASK TOOL RATIONALE 119
TABLE D.4.2.1-1 MICROGRAVITY EVA ENABLING TOOLS RATIONALE 120
TABLE D.4.3.1-1 SURFACE EVA ENABLING TOOLS RATIONALE 122
TABLE F1-1 TO BE DETERMINED ITEMS 126
TABLE F1-2 TO BE RESOLVED ITEMS 127

DRAFT

FIGURE

FIGURE 3.1.1-1 TRANSLATION PATH HARDWARE PROTRUSION ENVELOPE 15
FIGURE 3.1.1-2 TRANSLATION PATH MINIMUM DIAMETER 16
FIGURE 3.1.2-1 TOOL INTERFACE CLEARANCE 17
FIGURE 3.1.4-1 GLOVED-HAND CLEARANCE 18
FIGURE 3.1.5-1 EVA HANDRAIL/HANDHOLD MOUNTING CLEARANCE ENVELOPE 19
FIGURE 3.1.6-1 HANDRAIL/HANDHOLD SIDE CLEARANCE 19
FIGURE 3.1.7-1 APFR INSTALLATION/REMOVAL EVA CLEARANCE ENVELOPE 20
FIGURE 3.2.2-1 EVA CONTACT HAZARD PRECLUSIONS ENVELOPE 22
FIGURE 3.3.12.1-1 HANDRAIL/HANDRAIL PROFILE DIMENSIONS.....30
FIGURE 3.3.12.4-1 HANDRAIL/HANDHOLD GAPS.....31
FIGURE 3.3.12.6.1-1 OPTIMUM WORK VOLUME – MICROGRAVITY 32
FIGURE 3.3.12.6.2-1 CREW AIDS FOR STABILITY 33
FIGURE 3.4.2.2-1 EVA WORK VOLUME AND INCIDENTAL CONTACT VOLUME 36
FIGURE 3.4.8-1 INGRESS AND EGRESS AIDS FOR FOOT RESTRAINT.....39
FIGURE 3.5.1.2-1 EVA TETHER POINT DIMENSIONS 41
FIGURE 3.5.2-1 OPPOSING FORCES ON HANDRAIL/HANDHOLD 45
FIGURE 3.5.5-1 TOP MOUNTED WIF WORKSITE HALF LOADING CRITERIA49
FIGURE 3.6.4-1 CONNECTOR SPACING 51
FIGURE 3.7.1.3.4-1 SCALLOPED KNOB EXAMPLE 58
FIGURE 3.7.1.5.2-1 7/16 IN. 12 POINT EVA COMPATIBLE BOLT.....60
FIGURE 3.7.1.5.2-2 7/16 IN. HEXAGONAL EVA AND ROBOTIC COMPATIBLE BOLT 61
FIGURE 3.9.14 EXPOSED CORNER AND EDGES 76
FIGURE 3.10.2-1 MAXIMUM RECOMMENDED EMI EXPOSURE LEVEL.....83
FIGURE D-1 COMMON TOOLS MATRIX 108
FIGURE D.1.0-1 MECHANICAL TOOLING REFERENCE 110
FIGURE D.1.0-2 LEATHERMAN WAVE SPECS 110
FIGURE D.2.0 ELECTRICAL TOOLING REFERENCE 113
FIGURE D.4.1-1 EVA TASK TOOLS.....118
FIGURE D.4.2-1 MIGROGRAVITY EVA ENABLING TOOLS.....120
FIGURE D.4.3-1 SURFACE EVA ENABLING TOOLS 122
FIGURE D.4.4-1 EVA GEOLOGY ENABLING HARDWARE.....124

DRAFT

1.0 INTRODUCTION

Extravehicular Activity (EVA) is considered to be significant capability for Human Landing System (HLS). Exploration (x) EVA hardware systems include space suits Exploration Extravehicular Mobility (xEMU), xEVA tools & crew aids, and vehicle integration / support hardware. Being a distributed and dynamic capability (moving components), xEVA System hardware will interface with almost all elements of Human Landing System architecture. As such, it is important to document a singular set of requirements at the programmatic level to articulate “how to interface with xEVA System hardware” and “how to design hardware that EVA will access and manipulate”.

1.1 PURPOSE

The purpose of this document is to establish a set of EVA compatibility design requirements for Human Landing System modules/elements that interface with the xEVA System. Compatibility requirements applicable for each element and/or module are shown in Appendix G, Human Landing System Applicability Matrix. Each element and/or module will use the applicability matrix to flow down those applicable requirements in their respective level specifications. Unique EVA compatibility requirements associated with each element and/or module will be addressed in the appropriate element and/or module interface requirements documentation.

1.2 SCOPE

This document defines requirements controlled by the EVA Office for the hardware needed to provide EVA capability for Human Landing System mission. EVA-EXP-0070, Human Landing System Requirements provides a requirement for the Human Landing System to support EVA operations through compliance of this document. This document was constructed from the program-agnostic equivalent document controlled by the EVA Office EVA-EXP-0035, “Exploration EVA System Compatibility” document. This document will incorporate necessary changes and additions to compliment the unique concept of operation and architecture for HLS. EVA-EXP-0070 does not include information on the interfaces for space suit servicing, performance and checkout equipment, non-mechanical HLS-EVA Interfaces (such as wireless communication, video encoding/decoding, and audio encoding/decoding). All of these items will be defined in EVA-EXP-0067, HLS-xEVA System Interface Requirements Control Document. As the Human Landing System progresses through the development cycle, any new scenarios/concept of operations pertaining to EVA operations will be assessed for impacts to this document.

In many cases the values used for defining compatibility with a space suit is based on heritage US EVA capabilities as carried over from the Space Shuttle Program and modified for International Space Station (ISS) Program and considered to pertain to the microgravity environment. It is expected that the xEMU (or any other new EVA hardware provided by National Aeronautics and Space Administration (NASA) or partners) will

either meet or exceed the capabilities of the heritage values. As the xEMU design matures and/or as other suppliers of EVA hardware are identified, updates to the requirements will be proposed to the appropriate change authority to reflect the improvement/changes in EVA capabilities.

This document does not include information on the interfaces for space suit servicing, performance and checkout equipment. All items directly interfacing with the space suit in the airlock element, such as gas, fluid, and electrical connectors will be defined in the appropriate Human Landing System element-level Interface Requirements and Control Document (IRCD).

In addition, Orlan and Russian EVA hardware is currently outside the scope of this document. There will need to be an assessment performed to determine the Orlan suit and Russian EVA hardware's compatibility with each requirement in this document. Once performed, discussion of how to implement in this document will be addressed.

Requirements that describe the human-to-suit interfaces (like anthropometric requirements) or Intravehicular Activity (IVA) suit-to-vehicle interfaces are not included in this document. Those standards and their requirement guidance are included in NASA-STD-3001, Volume 1: Crew Health and Volume 2: Human Factors, Habitability, and Environmental Health.

1.3 CONVENTIONS AND NOTATIONS

1.3.1 Shall Statements (Requirements)

The convention used in this document which indicates requirements, goals, and statements of facts is as follows:

Designation	Description
"Shall"	used to indicate a requirement which must be implemented and its implementation verified (binding requirements)
"Should"	used to indicate a goal which must be considered
"Will"	used to indicate a statement of fact and is not verified

Those statements that fall more into a design consideration/best practice are located in Appendices B and C. While not considered requirements, these best practices are highly desirable for the design of hardware compatibility with EVA.

DRAFT

1.3.2 Requirement Identification

As documents are revised, there are cases where Sections will move; therefore, each requirement in this requirements document is uniquely numbered, and identified by the presence of a tag. The requirements tag "**[EVASC.XXXX]**" provide a trace to historical information across multiple Programs and Projects.

1.3.3 Rationale

A rationale statement is included for each requirement only when necessary. The purpose of the rationale statement is to indicate why the requirement is needed, the basis for its inclusion in a requirements document, and to provide context and examples to stakeholders. It is important to note that a rationale is not binding, and it only provides supporting information. In the event there is an inconsistency between the requirement and the rationale, the requirement is binding and takes precedence.

1.3.4 Units

For the purposes of this document the unit of measure should be considered as English units unless otherwise noted.

1.4 CHANGE AUTHORITY/RESPONSIBILITY

Proposed changes to this document shall be submitted by an EVA Office Change Request (CR) to the EVA Configuration Control Board (EVA CCB) for consideration and disposition.

The appropriate NASA Office of Primary Responsibility (OPR) identified for this document is the EVA Office. As such, the EVA CCB manages this document on behalf of the ISS Program as the delegated authority from the Space Station Control Board (SSPCB) per ISS MD 1049, Charter for the EVA CCB.

1.5 WORKMANSHIP

SSP 51073, Exploration EVA System Requirements, specify that all space suits and EVA Hardware are to meet the technical standards specified in EVA-EXP-0034, Exploration EVA Technical Standards. All xEVA System hardware in compliance with EVA-EXP-0035 will be required to be incompliance with the technical standards in EVA-EXP-0034 via the requirements levied in SSP 51073. For vehicle hardware, the Program's Technical Standards will be followed.

DRAFT

2.0 DOCUMENTS

2.1 APPLICABLE DOCUMENTS

The following documents include specifications, models, standards, guidelines, handbooks, and other special publications. The documents listed in this paragraph are applicable to the extent specified herein.

Document Number	Document Revision	Document Title
EVA-EXP-0034	Revision A	Exploration EVA System Technical Standards
EVA-EXP-0042	Revision A	Exploration EVA System Concept of Operations
EVA-EXP-0049	Baseline	Exploration EVA System Labeling Guidelines
EVA-EXP-0067	DRAFT	HLS-xEVA System Interface Requirements Control Document
JPR 5322.1	Revision H	Contamination Control Requirements Manual
JSC 65828	B, Change 1 (7/15/14)	Structural Design Requirements and Factors of Safety for Spaceflight Hardware
MIL-A-8625	Revision F Amendment 1	Anodic Coatings for Aluminum and Aluminum Alloys
NASA-STD-3001 Volume 2	Revision B	NASA Space Flight Human System Standard Volume 2: Human Factors, Habitability, and Environmental Health
NASA-STD-5020	Baseline (3/12/12)	Requirements for Threaded Fastening Systems in Spaceflight Hardware
SDG33107728 Drawing	N/A	Top Mounted Handrail Drawing (via SEG33106347)
SSP 51073	Revision A	Exploration Extravehicular Activity (EVA) Suit Systems Requirements Document

2.2 REFERENCE DOCUMENTS

The following documents contain supplemental information to guide the user in the application of this document.

Document Number	Document Revision	Document Title
EVA-EXP-0031	Baseline	EVA Airlocks and Alternative Ingress/Egress Methods
EVA-EXP-0032	Baseline	EVA-ISS Interface Definition Document
EVA-EXP-0035	Baseline	Exploration EVA System Compatibility
EVA Office Memorandum FA-14-043	N/A	EVA Office Process for Approving and Documenting Instances of EVA Handling of Masses Over the 750 lb. Limit

DRAFT

Document Number	Document Revision	Document Title
JSC 26626	Revision A	Extravehicular Activity (EVA) Hardware Generic Design Requirements
JSC 28528	Revision A	Preparation and Revision of DX Mockup Development Requirements Document (MDRDs)
JSC 39117	Revision C	Extravehicular Mobility Unit (EMU) International Space Station (ISS) Extravehicular Activity (EVA) Thermal Environment Requirements for Certification
JSC 39198		Incidental Contact Temperature Test of Extravehicular Mobility Unit (EMU) Softgoods Material Lay-Up
NASA-STD-4003	Revision A	Electrical Bonding for NASA Launch Vehicles, Spacecraft, Payloads, and Flight Equipment
PIRN Number 30256-NA-0187	Latest	Extravehicular Activity Standard Interface Control Document PIRN: ½ Inch Hexagonal EVA Compatible Bolt Updates
SDG33107506 Drawing	Latest	Knob, Push, Pitch Joint Assembly Articulating Portable Foot Restraint (APFR)
SED33107181 Drawing	Latest	EVA Knob Assembly Bridge Clamp
SEG33114987 Drawing	Latest	1.0 Inch Quick Disconnect (QD) Button Depress Tool
SSP 30256	Revision J	Extravehicular Activity Standard Interface Control Document
SSP 50005	Revision F	International Space Station Flight Crew Integration Standard
SSP 50021	Baseline DCN 005	International Space Station Program Safety Requirements Document
SSP 50835	Revision D	ISS Pressurized Volume Hardware Common Interface Requirements Document
SSP 57003	Revision L	International Space Station Program External Payload Interface Requirements Document

DRAFT

2.3 ORDER OF PRECEDENCE

In the event of a conflict between the text of this specification and an applicable document cited herein, the text of this specification takes precedence.

All specifications, standards, exhibits, drawings or other documents that are invoked as “applicable” in this specification are incorporated as cited. All documents that are referred to within an applicable document are considered to be for guidance and information only, with the exception of ICDs that shall have their applicable documents considered to be incorporated as cited.

DRAFT

3.0 REQUIREMENTS

This section provides a starting point for defining the minimum requirements and constraints that apply to performance, design, interoperability, maintainability, and safety that are applicable for performing EVAs.

3.1 CLEARANCES

3.1.1 Translation Path Hardware Protrusion

The Human Landing System shall design or configure equipment to not protrude into the minimum 43-in. (1.1 m) diameter translation path as outlined in the Translation Path Hardware Protrusion Envelope and Translation Path Minimum Diameter Figures. **[EVASC.0001]**

Rationale: The minimum diameter of the translation corridor of 43 in. (1.1 m) is to accommodate hand-over-hand EVA crewmember translation. Interference in translation paths may pose hazards to EVA crewmembers or impact the success of EVA activities by precluding translation to worksites. This includes any obstructions or intrusions in the envelope. This addresses NASA-STD-3001 V2 standard [V2 11002]. The only exclusion is translation aids. This minimum diameter is based on the heritage ISS EMU suit. The intent is to preserve this diameter for future missions that require microgravity EVA.

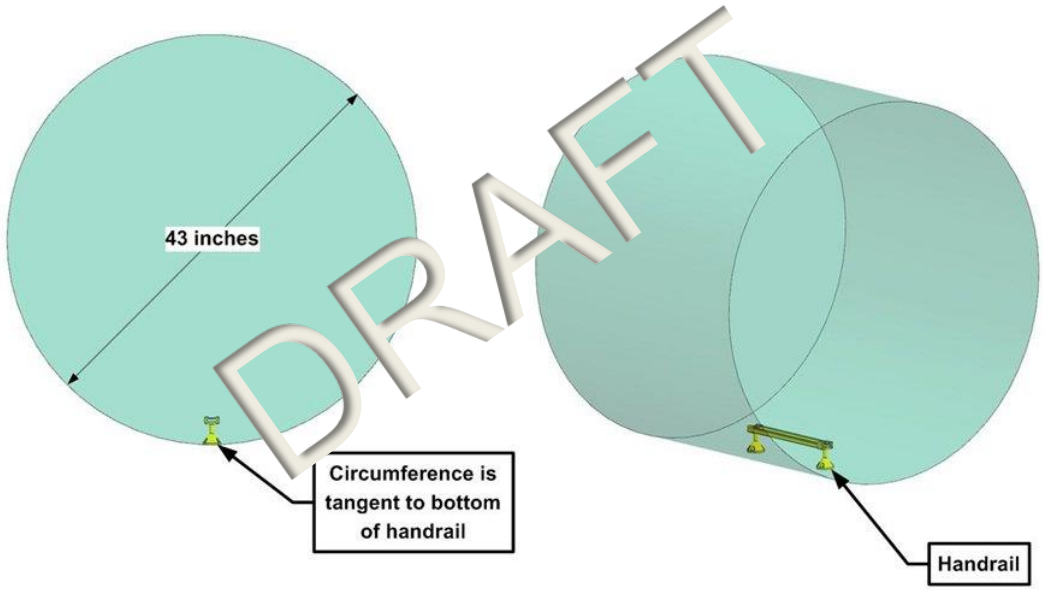

FIGURE 3.1.1-1 TRANSLATION PATH HARDWARE PROTRUSION ENVELOPE

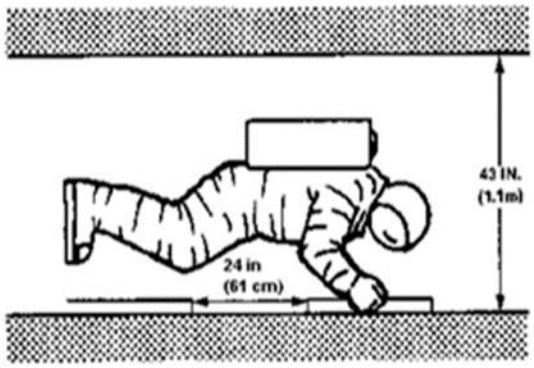

FIGURE 3.1.1-2 TRANSLATION PATH MINIMUM DIAMETER

3.1.2 Tool Interface Clearance

The Human Landing System shall maintain 3.0 in. (7.6 cm) of clearance between the gripping portions of a tool interface and any surrounding hardware or obstructions with a tool handle offset maximum of 14.0 in. (35.5 cm) as defined in the Tool Interface Clearance Figure. **[EVASC.0002]**

Rationale: Tools to be used during EVAs are to be identified by the Human Landing System, and clearances for efficient application are to be accommodated to ensure that the EVA task can be accomplished. In order to ensure the task can be accomplished, the clearance between the work surface and the tool design needs to include operation by a pressurized gloved-hand. Reference [EVASC.0004] that defines the handrail mounting clearance distance that accommodates grasp of the pressurized gloved-hand. The bolt head tool clearance is defined in requirement [EVASC.0007].

DRAFT

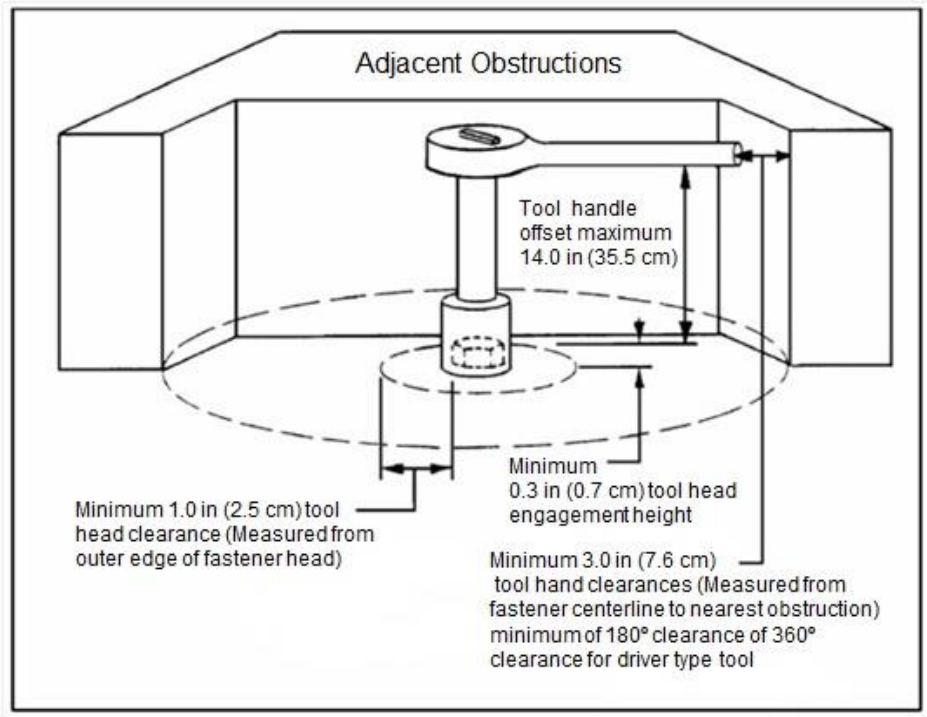

FIGURE 3.1.2-1 TOOL INTERFACE CLEARANCE

3.1.3 Bolt Clearance

The Human Landing System shall maintain a 1.0-in. (2.5 cm) clearance around the bolt head outer edge with a minimum tool head engagement height of 0.3 in. (0.7 cm) to ensure access as defined in requirement [EVASC.0002] Tool Interface Clearance Figure. **[EVASC.0007]**

Rationale: The intent of this requirement is to ensure tool access with the fastener head.

3.1.4 Gloved-Hand Clearance

The Human Landing System shall maintain clearances for a gloved hand as specified in the Gloved-Hand Clearance Figure. **[EVASC.0003]**

Rationale: Pressurized EVA gloves have their own thickness in addition to the human hands they protect. Interfaces to be operated by the EVA crewmember must accommodate the dimensions of the hand/glove combination.

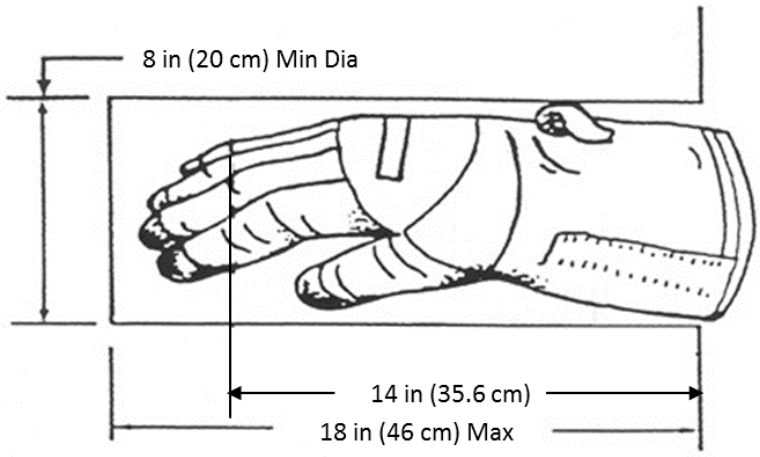

FIGURE 3.1.4-1 GLOVED-HAND CLEARANCE

3.1.5 Handrail/Handhold Mounting Clearance

The Human Landing System shall maintain a minimum clearance distance between the lower surface of the handrail/handhold and the mounting surface of 2.25 in. (5.7 cm) as shown in the EVA Handrail/Handhold Mounting Clearance Envelope Figure. **[EVASC.0004]**

Rationale: EVA handrail cross sections themselves have been designed to facilitate grasping by the gloved EVA crewmember's hand. However, it is theoretically possible to mount a handrail in such a way (such as immediately next to structure or over an exposed structural rib) that the EVA crewmember's gloved hand cannot access the EVA handrail. To ensure EVA handrails are mounted in a manner that preserves/facilitates their use, the area around and underneath handrails/handholds must be free of obstructions within the specified clearance dimensions. Adequate clearance is required to facilitate use by a pressurized gloved hand. This also supports clearance for tether hook attachment to the stanchions.

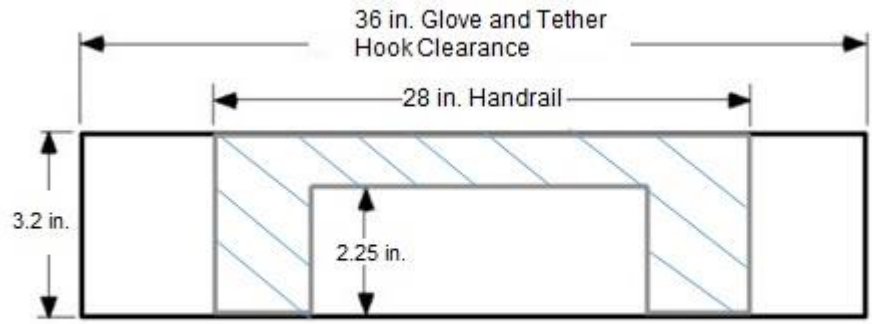

FIGURE 3.1.5-1 EVA HANDRAIL/HANDHOLD MOUNTING CLEARANCE ENVELOPE

3.1.6 Handrail/Handhold Side Clearance

The Human Landing System shall maintain a minimum 4 in. (10.16 cm) clearance to both sides of handrail/handholds as defined in the Handrail/Handhold Side Clearance Figure. **[EVASC.0005]**

Rationale: To ensure EVA handrails are mounted in a manner that preserves/facilitates their use, the area around and underneath handrails/handholds must be free of obstructions within the specified clearance dimensions. Adequate clearance is required to facilitate use by a pressurized gloved hand.

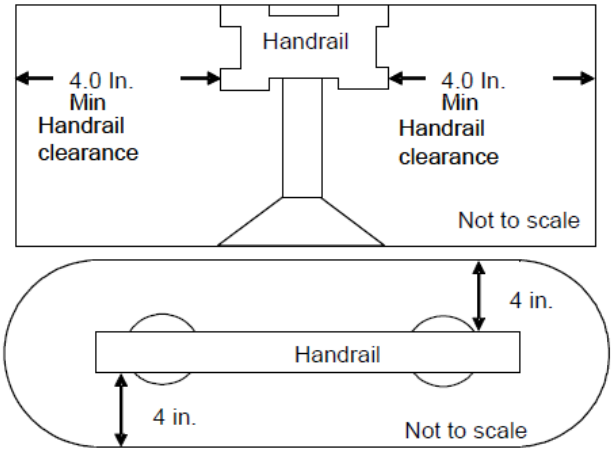

FIGURE 3.1.6-1 HANDRAIL/HANDHOLD SIDE CLEARANCE

3.1.7 APFR EVA Installation/Removal Clearance (when Docked in lunar orbit) -

The Human Landing System shall maintain a clearance envelope around the Passive Worksite Interface (WIF) to support EVA installation/removal of the Articulating Portable Foot Restraint (APFR) as defined in the APFR Installation/Removal EVA Clearance Envelope Figure. **[EVASC.0006]**

Rationale: The intent is to ensure adequate clearance is provided to support installation/removal of hardware designed to interface with the passive WIF. For other EVA WIF configurations, refer to SSP 30256, EVA Interface Control Document Section 3.6.4.2.2. Nominally used in microgravity environment.

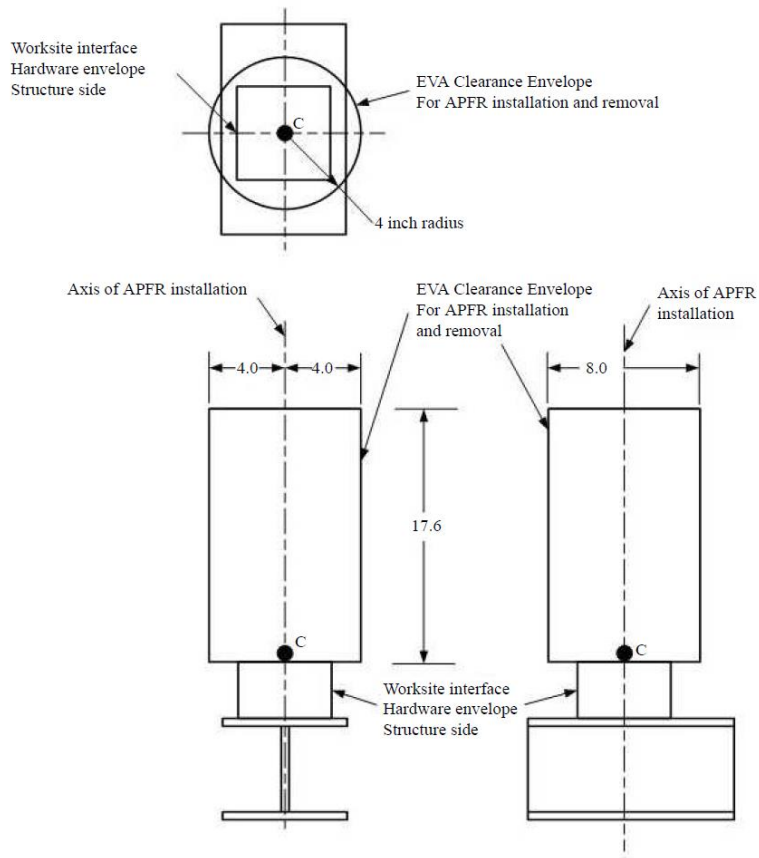

Notes:
1. Drawing not to scale
2. All dimensions are inches
3. Point C is the centroid of the bolt pattern

FIGURE 3.1.7-1 APFR INSTALLATION/REMOVAL EVA CLEARANCE ENVELOPE

3.2 TRANSLATION

3.2.1 Continuous EVA Translation Path (when docked in lunar orbit)

The Human Landing System shall provide EVA compatible accommodations to support continuous translation path to in lunar orbit. **[EVASC.0152]**

Rationale: Intentionally designed translation paths include features such as handrails and tether points that promote EVA crew movement and are free from contact hazards. These translation paths allow the EVA crewmember to safely access worksites as well as to safely and quickly return to the vehicle/airlock in case of an emergency. For initial missions HLS may dock with either Gateway or Orion. For sustainable phase missions HLS will dock with Gateway.

3.2.2 Translation Path

The Human Landing System shall design a translation path to all EVA worksites. **[EVASC.0008]**

Rationale: Intentionally designed translation paths include features such as handrails and tether points that promote EVA crew movement and are free from contact hazards. These translation paths allow the EVA crewmember to safely access worksites as well as to safely and quickly return to the airlock in case of an emergency. This includes translation to/from the Lunar Surface.

3.2.3 Incapacitated Crewmember Interfaces

The Human Landing System shall provide a device **<TBR-HLS-EVA-002>** for a suited crewmember to operate for rescue of an incapacitated suited crewmember from the surface and into the vehicle through the EVA hatch. **[EVASC.0154]**

Rationale: Incapacitated pressurized-suited crewmembers may be unable to ingress the vehicle on their own and may require assistance from a second crewmember. Depending on architecture and hatch height from the lunar surface, this can include items such as winch and rescue harness, deck space/porch, hatch seal cover, etc. Devices may need to be operated by a suited crewmember both internal and external to the vehicle. This includes the volume to perform the assisted task, hatch opening size and operation, as well as the external translation path and mobility/stabilization aids. Removing an incapacitated crewmember from a rear entry suit could be challenging and could require extra support structure, or possible tools to assist the crewmember inside as well as removal from the suit.

3.2.4 EVA Contact Hazards Preclusion Beyond Translation Corridor

The Human Landing System shall preclude EVA contact hazards (EVA Kick loads as defined in [EVASC.0050] and EVA safety requirements defined in Section 3.9) within 24 in. diameter beyond the translation corridor dimension as outlined in the EVA Contact Hazard Preclusions Envelope Figure. **[EVASC.0010]**

Rationale: This additional 24 in. in all directions around the translation corridor protects for inadvertent contact outside of the nominal translation corridor. This addresses NASA-STD-3001 V2 standard [V2 11005]. This additional envelope is based on the heritage ISS EMU suit. The intent is to preserve this diameter for future missions that require microgravity EVA.

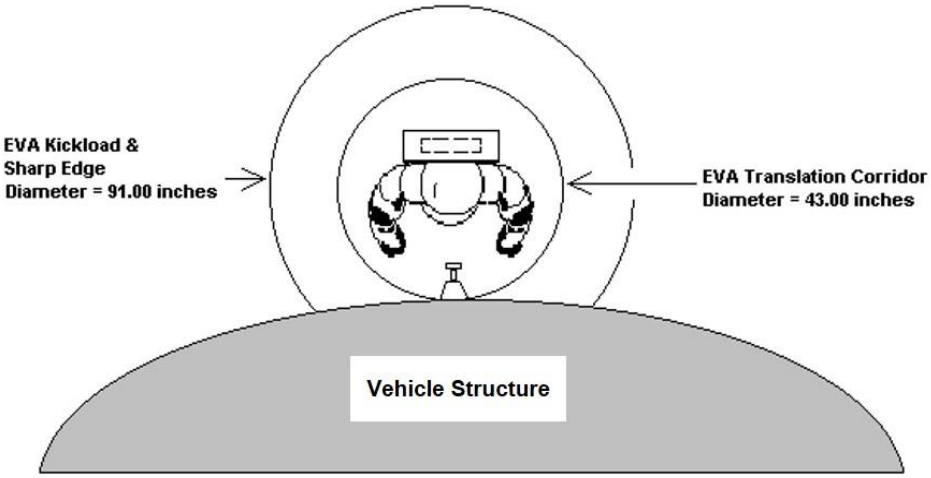

FIGURE 3.2.2-1 EVA CONTACT HAZARD PRECLUSIONS ENVELOPE

3.3 EVA HANDLING

3.3.1 EVA Handling Features

The Human Landing System shall include EVA handling features that are commensurate with the size of the hardware and the expected EVA operations as defined in the Constraints for EVA Transport of Objects Table. **[EVASC.0012]**

Rationale: This is to ensure that there will be provisions for proper EVA handling and transport. Some of the handling features can be provided as Government Furnished Equipment (GFE) (contact NASA EVA Office for assistance). The handling features required progress from a simple tether point, to handrails, to a square grid interface, to a fixture for robotic arm translation. Similarly, the translation mode of the crewmember progresses from hand-over-hand to Remote Manipulator System (RMS) with object on a tether. For shorter distances, BRT, foot restraints can be used. The larger or more massive the object, the more extensively the object must be tethered. Items that are over 750 lbm require robotic arm transport through a support fixture (e.g. grapple, micro square, etc.) for robotic arm translation. Any violation of this requirement will require the Payload or System Provider to execute the process defined in the EVA Office

Memorandum FA-14-043, EVA Office Process for Approving and Documenting Instances of EVA Handling of Masses Over the 750 lbm Limit.

TABLE 3.3.1-1 CONSTRAINTS FOR EVA TRANSPORT OF OBJECTS TABLE

Object/Size	Object Translation Mode	Object Handling Method	Design Features Required for Translation
0-20 lbm, 0-2 ft^3 max dim: 2 ft	Hand-over-hand crew translation with object on a tether	Tether	Tether point
0-300 lbm, 2-5 ft^3 max dim: 5 ft	Hand-over-hand crew translation with object on a BRT	BRT	Handrail section[1]
0-750 lbm, 5-100 ft^3 max dim: 8 ft	Object on a transfer device (Crewmember on robotic arm with an APFR)	Transfer device interface	(1) Two handrails are required[1]

[1]Handrail requirements can also be met using square or round scoops interfacing with square or round micro-fixtures on the object. The Human Landing System must supply the square or round micro-fixture.

3.3.2 Unpressurized Hatch Transfer Constraint (when docked in lunar orbit)

The Human Landing System shall limit dimensions of any hardware to be transferred between pressurized and unpressurized environments to 32 in. (81.28 cm) by 21 in. (53.34 cm) by 18 in. (45.72 cm). **[EVASC.0013]**

Rationale: The hatches must allow for both pressurized and unpressurized transfer of hardware. Sufficient access and free volume will be needed to ensure that the crew can transfer the hardware.

3.3.3 xEMU Pressurized Transfer Hatch - Microgravity

The Human Landing System shall design hatches to comply with xEMU suited pressurized crewmember transfer between pressurized and unpressurized environments with minimum hatch dimensions of 39.37 in. (1000 mm). **[EVASC.0135]**

Rationale: Suited pressurized crewmembers cannot fit through NASA Docking System (NDS). Analysis and experience have shown that a 1000 mm hatch (e.g. circular, square, "D" hatch) allows a pressurized suited crewmember to transfer through the hatch in microgravity.

3.3.4 EVA Lunar Hatch Dimensions

The Human Landing System shall provide a minimum EVA Lunar hatch opening of 40 in. (horizontal dimension) X 60 in. (vertical dimension) (1.02 m X 1.53 m for EVA egress/ingress. **[EVASC.0153]**

Rationale: A minimum EVA hatch opening is needed to allow a pressurized crewmember to enter and exit a structure in partial gravity without the xEMU coming in contact with the surrounding hatch structure. A sufficiently sized hatch opening allows a crewmember to ingress/egress without crawling, without contorting their body such as to cause undue strain, and without spending time aligning themselves with direct center of the opening. EVA Hatch sizes must allow for the incapacitated crewmembers or crewmember requiring assistance to pass through the EVA hatch. Apollo sized EVA hatches caused undue strain to crewmembers and caused their metabolic rate to increase during ingress/egress and did not allow for incapacitated crewmember operations.

3.3.5 EVA Secondary Ingress Method - Microgravity

The Human Landing System shall provide a secondary ingress hatch for EVA contingency ingress. **[EVASC.0136]**

Rationale: Heritage airlock operations have shown the need to allow for a secondary ingress in the event of a failure of the primary method, thereby taking the burden off of a module to be designed to go to vacuum in case of a contingency. Secondary ingress/egress does not necessarily mean separate hatches on the same volume. It could, for example be met by two separate volumes linearly aligned allowing the inner volume to act as the redundant ingress/egress method if the outer volume were to fail. See EVA-EXP-0031, EVA Airlocks and Alternative Ingress/Egress Methods for reference.

3.3.6 Handling Alignment Criteria

3.3.6.1 Mounting Alignment Devices

The Human Landing System shall provide alignment devices for hardware that requires mounting to preclude incorrect installations. **[EVASC.0014]**

Rationale: Alignment devices are preferred over markings alone. Alignment devices are often used to preclude incorrect installation and help provide gross alignment. However, in some instances alignment devices may not be practical. In these cases, marking alone may be used.

3.3.6.2 Handling Alignment Marks

The Human Landing System shall incorporate alignment marks to aid in proper interface orientation, installation, and mechanism operation. **[EVASC.0015]**

Rationale: Alignment marks can also be used to help indicate complete installation or actuation. This could include alignment marks, color coding, appropriate visual cues, and/or orientation arrows. A method for visual alignment (e.g. straight or curved lines of a width and length to allow for accurate alignment) can also be applied to both mating parts of the hardware to assist in alignment in the operational position. Alignment devices are preferred over markings alone.

3.3.7 Manual Locking Features

3.3.7.1 Locking Device

The Human Landing System shall design mechanism locking devices (such as latches and latch locks) to travel at least 30% of their full travel before changing state (locked to unlocked or vice versa). **[EVASC.0016]**

Rationale: Although latching may occur prior to 30%, the intent is to travel beyond 30% before changing state. Designing a locking device mechanism that requires a large range of travel before changing state ensures that the EVA crewmember is aware what position the device is in at all times. Locking devices that have safety-critical functions may require additional locking features like Push-in-Place (PIP) Pins to maintain sufficient failure tolerance as determined during the safety review process.

3.3.7.2 Over Center Device Force

Over center devices shall have a minimum peak force of twice the force required to initiate travel, not to exceed 10 lbf (44N). **[EVASC.0124]**

Rationale: Dexterity and tactility are degraded when wearing a pressurized xEMU, thus requiring increased levels of tactile feedback. Maximum force does not exceed 10 lbf (44N) to comply with the finger actuation force requirement [EVASC.0018].

3.3.7.3 Soft Dock or Soft Capture Mechanisms

The Human Landing System shall provide a soft dock or soft capture mechanism for hardware that is not held in place while being permanently installed. **[EVASC.0017]**

Rationale: Soft dock or soft capture is utilized to hold hardware in place during installation in microgravity. A soft dock mechanism holds the item in place, but the

crewmember can remove it by applying a slight force to overcome the mechanism (i.e., magnets or ball detents). Soft capture release requires an additional operation of a mechanism for release (i.e., mechanical latch). The intent of this requirement is from the perspective of what works best for EVA. This may or may not be acceptable for Extravehicular Robotics (EVR) Systems. Depending on the Program this requirement is applied to and their plans for EVA and EVR, tailoring may be required. While in lunar orbit, EVR is considered to be the primary mode of mating/demating external payloads. Soft docks should be avoided as much as possible, especially those requiring high loads.

3.3.7.4 Soft Capture

The Human Landing System shall use soft capture, as opposed to soft dock in the following cases to increase safety:

a. Hardware more massive than 600 lbm (272 kg)

b. Large hardware that presents crewmember visibility problems when verifying position for mating

c. Complex hardware with unusual shapes or centers of gravity. **[EVASC.0125]**

Rationale: Soft capture helps restrain hardware items, while final alignment/attachment can be made. Hardware that does not require a soft dock/soft capture may still employ these devices to improve EVA operability. The intent of this requirement is from the perspective of what works best for EVA. This may or may not be acceptable for EVR systems. Depending on the Program this requirement is applied to and their plans for EVA and EVR, tailoring may be required. While in lunar orbit, EVR is considered to be the primary mode of mating/demating external payloads. Soft docks should be avoided as much as possible, especially those requiring high loads. Soft capture can be the first step in the process for a very large object. Once captured, and additional soft dock may also be used to establish fine alignment prior to final mechanical attachment, such as bolt torques or latch throws.

3.3.7.5 Soft Dock Force

The force required to initially and temporarily secure an object (soft dock) shall be sized proportionally to the mass of the object per the Soft Dock Force Table. **[EVASC.0126]**

Rationale: The larger the mass, the more difficult it may be to perceive the tactile feedback that soft dock has been achieved. Existing rigidizable tether configurations only support applying forces of up to 5 lbf (22 N). Imparting forces beyond 5 lbf (22 N) will require alternate methods of restraining the crewmember. The intent of this requirement is from the perspective of what works best for EVA. This may or may not be acceptable for EVR systems. Depending on the Program this requirement is applied to and their plans for EVA and EVR, tailoring may be

required. While in lunar orbit, EVR is considered to be the primary mode of mating/demating external payloads. Soft docks should be avoided as much as possible, especially those requiring high loads.

TABLE 3.3.6.5-1 SOFT DOCK FORCE

Hardware Mass lbm (kg)	Soft dock Force lbf (N)	Soft Dock Force Tolerance lbf (N)
45–200 (20.4–90.7)	5 (22)	0.5 (2.2)
201–400 (91.2–181.4)	10 (44)	1 (4.4)
401–600 (181.9–272.2)	15 (67)	1.5 (6.7)
601–750 (272.6–340.2)	20 (89)	2 (8.9)

3.3.8 EVA Gloved Hand Compatibility

The Human Landing System shall all EVA operable design knobs, fasteners, latches, and other hardware requiring a twisting/turning hand/wrist motion to be sized for operation by a pressurized gloved EVA hand. **[EVASC.0021]**

Rationale: If the interface is required to be hand-actuated, then it has to be sized to be operated by a pressurized gloved-hand. While dexterity and tactility are degraded when using a pressurized xEMU suit, fatigue is also an issue. Fatigue happens when repeatedly applying a significant load to achieve a task. Use of the full hand to apply twisting and turning motion will reduce finger force required to accomplish task and will thereby reduce finger/hand fatigue.

3.3.9 Grip Surface

The Human Landing System should incorporate a non-abrasive non-slip surface on hand-gripping surfaces that have a repetitive use potential to prevent EVA glove slippage and abrasion. **[EVASC.0023]**

Rationale: This can be achieved through surface finish or shape of the object.

3.3.10 Unique Labeling

The Human Landing System shall code and/or mark translation paths, worksites and any other call-outs for the EVA crewmember with appropriate cues/indicators/labels for intended use as defined in EVA-EXP-0049, Exploration EVA System Labeling Guidelines. **[EVASC.0024]**

Rationale: Labeling can include alignment markings, operating instructions (bolt turns/torque/direction), Connector identification, Orbital Replacement Unit (ORU) part number and serial number (to prevent confusion during change out), caution and warning labels, location identification, etc. There are cases where the hardware may not have adequate surface to include this data on a label.

3.3.11 Hand Tools

3.3.11.1 Hand Tool Operations

The Human Landing System shall design hand tools to be capable of being operated one-handed, ambidextrous for engagement/disengagement. **[EVASC.0025]**

Rationale: EVA operations require the crewmember to actively use both hands to fully complete a task. In microgravity, this can mean that one hand is used to stabilize the crewmember while the other is used to operate the tool.

3.3.11.2 Ratchet Wrenches

3.3.11.2.1 Hand Ratcheting

The Human Landing System shall design worksites that necessitate hand ratcheting to include at least 90º of handle movement. **[EVASC.0135a]**

Rationale: Ratchet wrenches can be used where at least 90° of handle movement is possible. *When the hardware cannot accommodate this design feature, a power tool may be required.*

3.3.11.2.2 Throw Angle

Throw angles for tools that incorporate a ratcheting handle shall be a minimum of 45º. **[EVASC.0026]**

Rationale: Efficient tool usage requires adequate access space.

3.3.11.2.3 Ratchet Mechanism

The Human Landing System shall design hardware requiring use of a ratchet wrench that incorporates a fine tooth mechanism allowing engagement every 10º maximum. **[EVASC.0127]**

Rationale: Ratchet increments should be as small as possible. The 10º increments provides 18 ratchet cycles in 180º of handle movement.

3.3.11.2.4 Back Drive Torque

The Human Landing System shall design EVA wrenches to have a maximum back drive torque of 7 in.-oz (0.5 Nm) while operated by a pressurized glove. **[EVASC.0128]**

Rationale: Incorporating this will ensure one-handed operation by the crewmember.

3.3.11.2.5 Running Torque

The Human Landing System shall design fasteners to be used with EVA ratchet wrench to have a running torque that is greater than the maximum back drive torque of 7 in.-oz (0.5 Nm). **[EVASC.0129]**

Rationale: Incorporating this will ensure one-handed operation by the crewmember.

3.3.12 EVA Actuated Controls

3.3.12.1 Pressurized Glove Compatibility

The Human Landing System shall ensure that all controls an EVA crewmember might operate are compatible with a pressurized glove. **[EVASC.0027]**

Rationale: Controls that necessitate actuation by a pressurized glove are to have the appropriate features for pressurized suited operation. The controls may need to be adjusted to accommodate the appropriate tactile feedback when used by the pressurized-glove hand to ensure accurate operation of the control compared to unsuited performance.

3.3.12.2 Inadvertent Actuation of EVA-Actuated Controls

The Human Landing System shall design EVA-actuated controls to prevent inadvertent actuation. **[EVASC.0087]**

Rationale: This can be accomplished via switch guards, recessing, etc. EVA worksites are often congested and inadvertent contact is often hard to avoid.

3.3.13 EVA Handrails/Handholds

3.3.13.1 Handrail/Handhold Cross-Section

The Human Landing System shall design cross-sectional profiles for handholds/handrails to meet the Handrail/Handrail Profile Dimensions Figure with tolerances per SDG33107728, via Top Mounted Handrail drawing SEG33106347 latest revision. **[EVASC.0029]**

Rationale: The intent of this requirement is to ensure that all handholds/handrails are designed to accommodate the various EVA interfaces (e.g. pressurized glove, tools, tethers, etc.). The Human Landing System is encouraged to contact the Johnson Space Center (JSC) EVA Office before manufacturing handrails/handholds to ensure that the handrail/handhold meets interface requirements.

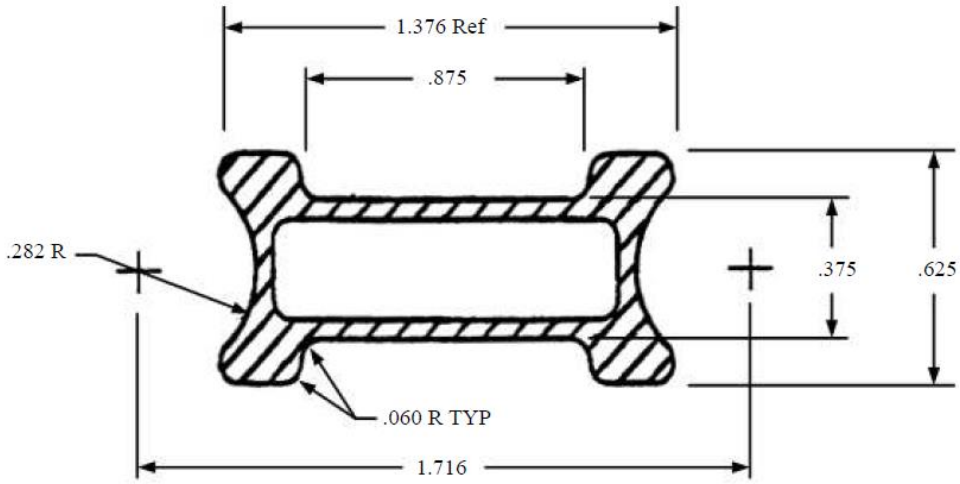

FIGURE 3.3.12.1-1 HANDRAIL/HANDRAIL PROFILE DIMENSIONS

3.3.13.2 Handrail/Handhold Length

The Human Landing System shall design handholds/handrails with a minimum grip length of 6 in (15.2 cm) that can be operated by a pressurized glove. **[EVASC.0030]**

Rationale: Grip length is essential in designing translation aids for EVA crewmembers. There needs to be adequate length for the EVA pressurized glove to access for EVA activities. This also will accommodate attachment of a BRT as long as it meets the torsional loading on the handrail/handhold from the interface connection point as defined in the torsional loading requirement [EVASC.0051].

3.3.13.3 Handrail/Handhold Accessibility

The Human Landing System shall design handrail/handholds and other EVA interfaces located in the defined crew translation path or worksite to be left exposed and usable to the crew as a translation aid. **[EVASC.0031]**

Rationale: Obscured or blocked handholds/handrails can impede the accomplishment of EVA tasks. Thermal covers on spacecraft and hardware should be designed such that handholds/handrails remain accessible. For handrails which are used only as handling aids (and not translation aids), the handrail may be covered as long as it is accessible via an EVA-operable access cover or flap. This addresses NASA-STD-3001 V2 standard [V2 11003].

3.3.13.4 Handrail/Handhold Spacing

The Human Landing shall space handholds/handrails and the integral safety tether attach points to not exceed 24 in (61cm) between the standoff and handrail/handhold as defined in the Handrail/Handhold Gaps Figure. **[EVASC.0032]**

Rationale: The 24-in spacing is the comfortable and acceptable arm reach for U.S. Astronauts.

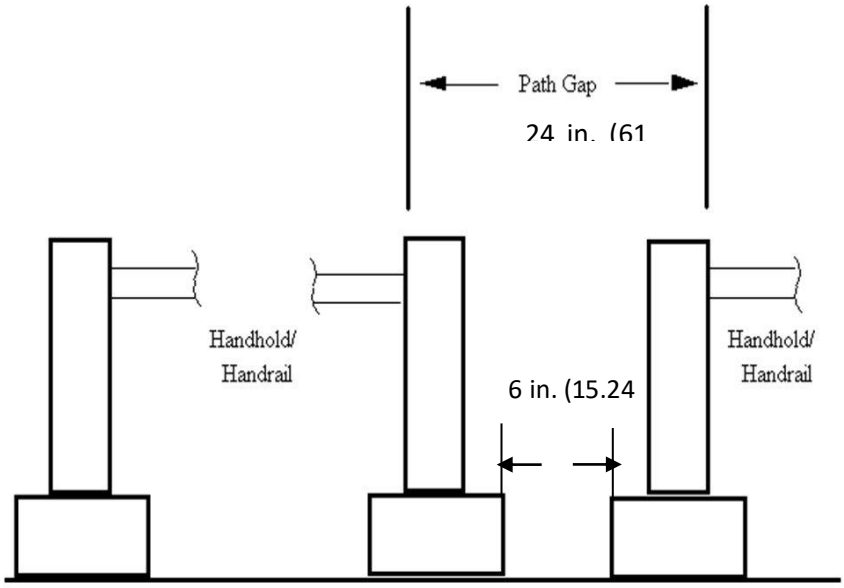

FIGURE 3.3.12.4-1 HANDRAIL/HANDHOLD GAPS

3.3.13.5 EVA Egress Handrail Spacing

The Human Landing System shall space handrail/handholds required for EVA egress to be within 12 in (30.5 cm) of the EVA egress location. **[EVASC.0144]**

Rationale: Need to ensure that there is adequate aid for EVA egress operations. The nominal handrail/handhold spacing is defined in [EVASC.0032].

3.3.13.6 EVA Worksites

3.3.13.6.1 Optimum Work Envelope – Microgravity (when Docked in lunar orbit)

The Human Landing System shall ensure EVA worksites with either one or two-handed EVA glove operations reside within the working volumes as defined in the Optimum Work Volume - Microgravity Figure. **[EVASC.0035]**

Rationale: If the EVA task requires simultaneously two-handed operations, the two-handed working volume should be used. If the EVA task can be done one-handed, the one-handed work volume should be used. This is based on the heritage ISS EMU suit. The intent is to preserve the envelopes for microgravity EVAs.

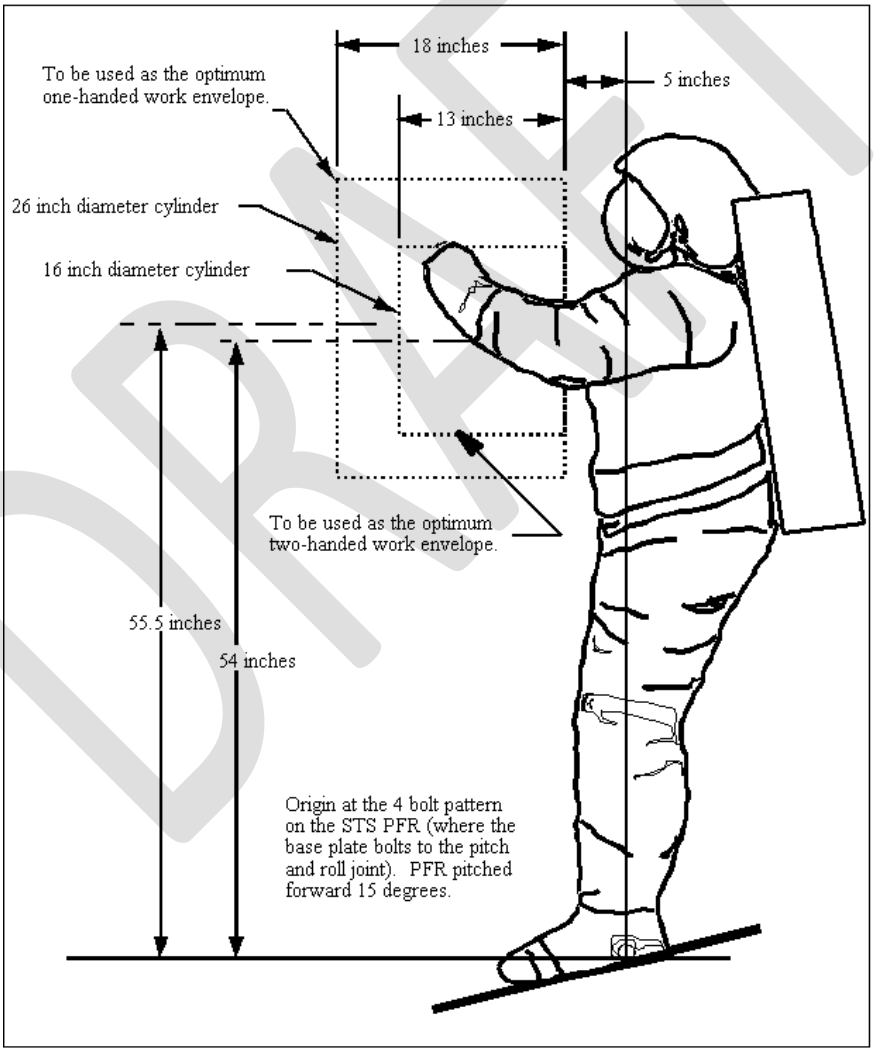

FIGURE 3.3.12.6.1-1 OPTIMUM WORK VOLUME – MICROGRAVITY

3.3.13.6.2 Crew Aids for Stability

The Human Landing System shall place crew stability aids or grasp points for a dedicated, robotic, or free-float worksite within 18 inches (0.46m) above or below the center of the crewmember's optimum two-handed envelope, 24 inches (0.6m) to the left or right of the body centerline, and between 5 inches (0.13m) and 23 inches (0.58m) from the bolt hole pattern of the foot restraint (same depth as the one-handed work envelope) as defined in the Crew Aids for Stability Figure. **[EVASC.0036]**

Rationale: Stability aids in the specified envelope provide usable and reachable interfaces to enable performance of EVA tasks. Stability aids might include handrails, handholds, or equivalent structure. The one and two-handed envelopes are defined in requirement [EVASC.0035] and are depicted in the figure below, pink for the two-handed and yellow for the one-handed envelope. This is based on the heritage ISS EMU suit. The intent is to preserve the envelopes for microgravity EVAs.

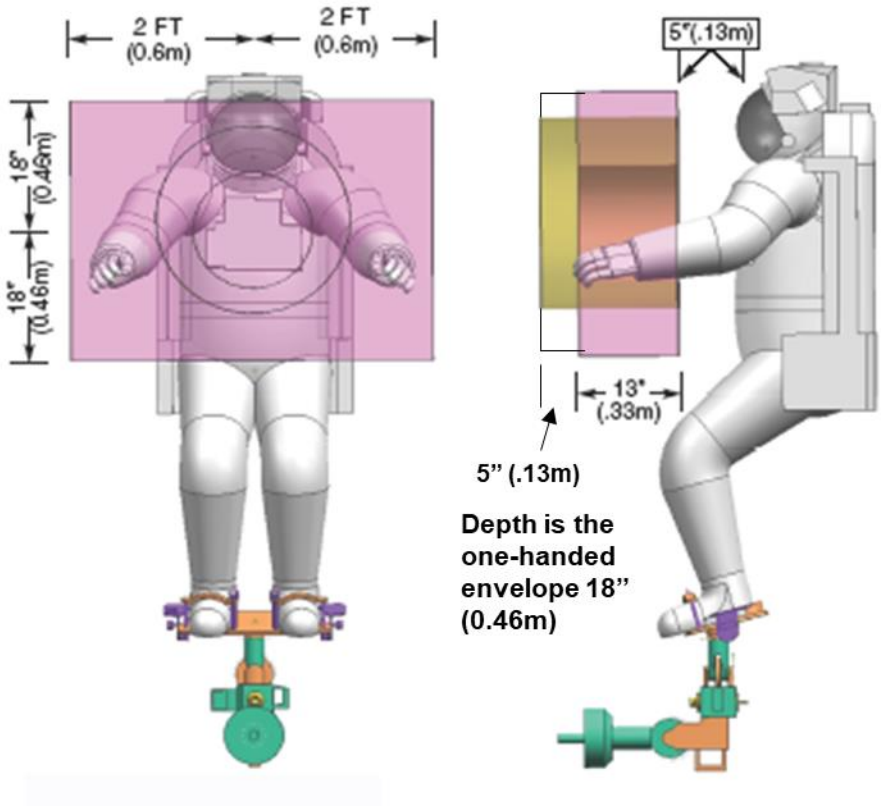

FIGURE 3.3.12.6.2-1 CREW AIDS FOR STABILITY

Note: For definitions of the one and two-handed envelope, reference the Optimum Work Volume Figure – Microgravity in requirement [EVASC.0035].

3.3.13.6.3 EVA Worksites Using Robotic Work Platform (when docked in lunar orbit)

The Human Landing System shall design worksites requiring a robotic work platform to include handholds/handrails within the EVA crewmember worksite area to react forces or moments and provide stability. **[EVASC.0037]**

Rationale: Intent is to ensure that the forces or moments created by the crewmember do not back drive the robotic work platform. It is indented that the handrails/handholds meet the Crew Aids for Stability requirement [EVASC.0036].

3.3.13.7 EVA Hardware

3.3.13.7.1 Lubricant Use

The Human Landing System shall use hardware lubricants that precludes transfer to the EVA glove or must accept that the lubricant area will be designated as a “no touch” area. **[EVASC.0038]**

Rationale: It has been shown that dry films are the best for EVA cleanliness purposes, but may not be appropriate for all tool performance applications. Other lubricants may be acceptable, but must not transfer to the xEMU glove/suit.

3.3.13.7.2 Commonly Implemented EVA Interfaces

For commonly implemented EVA interfaces, the Human Landing System shall obtain these items as Government Furnished Equipment (GFE). **[EVASC.0039]**

Rationale: Use of GFE for common interfaces is beneficial in that it provides consistency across the vehicle. The NASA EVA Office has standard items available as GFE, these include handrails, tether hooks and other piece parts, foot restraint interfaces, quarter turn fasteners, and brackets.

3.4 WORKSITE OUTFITTING

3.4.1 Worksite Mobility

The Human Landing System shall design foot restraints that accommodate the crewmember range of motion within the constraints of the xEMU suit while at the EVA worksite defined in the Optimum Work Volume-Microgravity Figure in requirement [EVASC.0035]. **[EVASC.0040]**

Rationale: A worksite is any location outside the pressurized environment where an EVA crewmember may perform a task, either planned or contingency. The work volume is based on the heritage ISS EMU suit. The intent is to preserve the envelopes for microgravity EVAs.

3.4.2 Worksites

3.4.2.1 Worksite Field of View

All tasks to be performed by an EVA crewmember shall have an unobstructed line of sight. **[EVASC.0041]**

Rationale: The intent is to ensure that EVA interfaces are not obstructed by surrounding hardware. EVA suits limit the field of vision and range of motion of EVA crewmembers when compared with non-suited activities. The location of equipment to be operated during EVA must accommodate these limitations. This addresses NASA-STD-3001 V2 standard [V2 11018].

3.4.2.2 EVA Entrapment

The Human Landing System shall design EVA worksites, translation paths, and incidental contact volumes to not entrap or entangle an EVA-suited crewmember as specified in the EVA Work Volume and Incidental Contact Volume Figure. **[EVASC.0042]**

Rationale: The work volume allows the crewmember to work comfortably without entrapment or confinement concerns and preserves a free area around the crewmember to reduce the risk of inadvertent EVA contact hazards. The additional 24 in. zone protects for inadvertent contact outside of the nominal work volume. Examples of potential entrapments include holes, glove clearances, translation paths, latches, fasteners, etc.). Reference requirement [EVASC.0111] for design of hardware to preclude entrapment. This is based on the heritage ISS EMU suit. This addresses NASA-STD-3001 V2 standards [V2 9006] and [V2 9034].

DRAFT

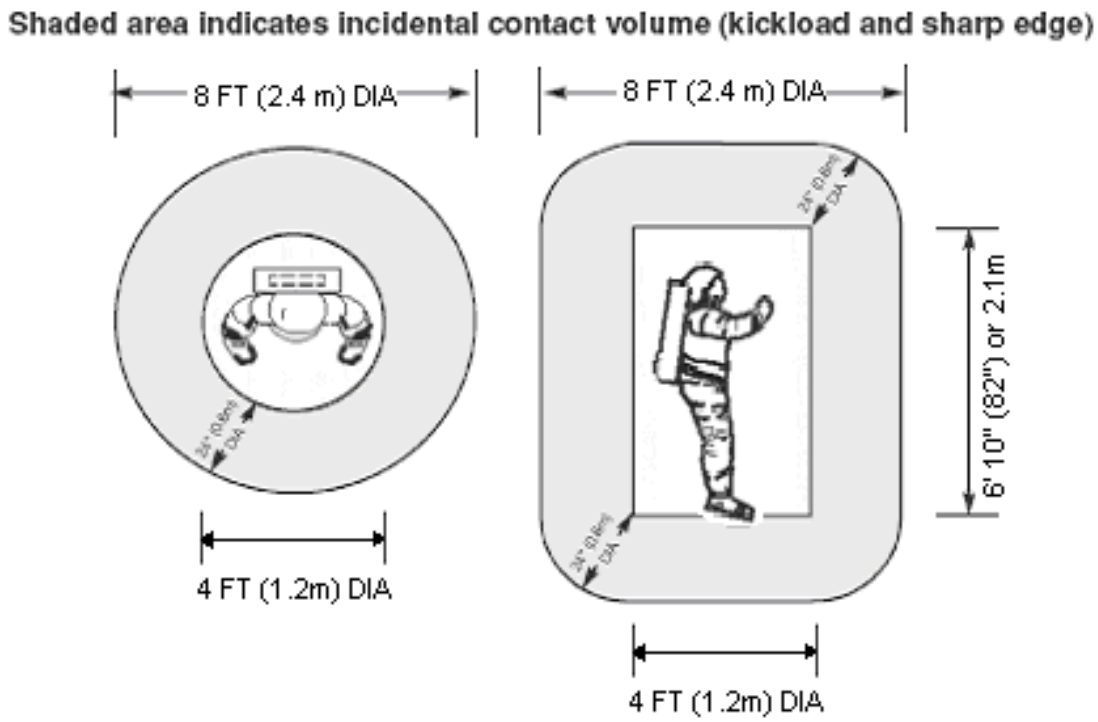

FIGURE 3.4.2.2-1 EVA WORK VOLUME AND INCIDENTAL CONTACT VOLUME

3.4.3 Worksite Restraints

The Human Landing System shall design dedicated EVA worksites at located where any of the following conditions apply, for contingency cases where robotic crew transport and restraint capability cannot be used:

(1) Two-handed operations must be used

(2) Forces are required which exceed the following:

Linear Force	Duration
1.0 lbf	4.5s
5.0 lbf	2.1s
10.0 lbf	1.4 s

(3) Tools must be used

(4) Objects for manipulation do not have a soft dock/soft capture mechanism to aid in installation **[EVASC.0044]**

Rationale: Restraint provisions at a worksite vary, depending on the complexity and specific requirements of the task. Reference the Crew Aids Stability Figure [EVASC.0036] for relative placement of stability aids. The use of a BRT or Remote Manipulator Arm may be used for the actual task requiring a foot restraint to limit translation and foot restraint setup overhead.

3.4.4 Dedicated EVA Worksite - Microgravity

The dedicated EVA worksite shall restrain the crewmember at the worksite with either an APFR or BRT. **[EVASC.148]**

Rationale: As defined in [EVASC.0044], dedicated EVA worksites are considered as a two-handed task, and require the use of tools.

3.4.5 Robotic Assisted EVA Worksites

EVA worksites requiring crew positioning when the robotic arm platform is stationary shall provide a force reaction mechanism as defined in requirement [EVASC.0036] independent of the robotic stabilization platform for EVA worksite operations requiring crew-generated forces greater than 10lbf (44N). **[EVASC.0149]**

Rationale: The intent is to ensure that if a robotic assisted worksite is needed, that the hardware provide considers definition of the worksite to be within the kinematic and reach envelope of the manipulator utilized. In addition that the robotic arm platform satisfies the Crew Aids for Stability requirement [EVASC.0036]

3.4.6 Free-Float Worksites - Microgravity

All tasks to be performed be a free-float crewmember shall be located within the one-handed envelope defined in the Optimum Work Volume - Microgravity Figure in requirement [EVASC.0035]. **[EVASC.0150]**

Rationale: Free-float worksites are considered to be an option when the following does not apply: where it is not considered to be a dedicated worksite as defined in requirement [EVASC.0044] or a Robotic Assisted EVA Worksite as defined in [EVASC.0149].

3.4.7 Installation of Passive Worksite Interface Sockets

The Human Landing System shall design EVA worksites to accommodate passive Worksite Interface (WIF) sockets that have handholds/handrails located within 24-in. of the passive WIF to support installation of the foot restraint by the EVA crewmember. **[EVASC.0045]**

Rationale: Based on previous ISS experience, the intent of this requirement is to ensure that interfaces necessary to interface with the foot restraint socket are considered part of the EVA worksite and include the appropriate stability aids for installation.

3.4.8 Foot Restraint Ingress/Egress Aids

The Human Landing System shall design worksites with crew mobility aids located within 36 to 48 in. above the foot restraint/boot interface, 24 in. to the left or right of the foot restraint/boot interface centerline, and 18 in. in front of the centerline axis of the foot restraint/boot interface to aid in ingress and egress of the foot restraint as specified in the Ingress and Egress Aids for Foot Restraint Figure. **[EVASC.0046]**

Rationale: Ingress and egress aids should be placed at appropriate positions to accommodate the limitations of the xEMU suit design. This requirement only applies to those Human Landing Systems that require the use of a WIF. These dimensions are based on the heritage ISS EMU suit. The intent is to preserve the envelopes for microgravity EVAs.

DRAFT

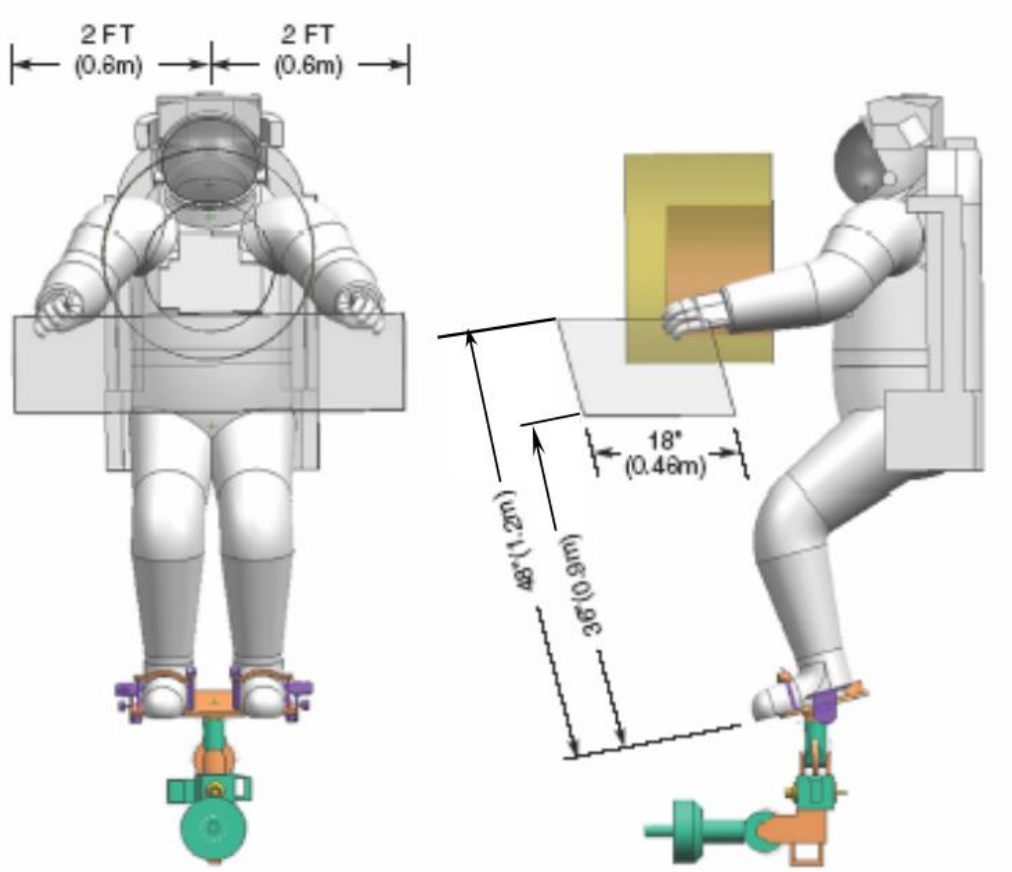

FIGURE 3.4.8-1 INGRESS AND EGRESS AIDS FOR FOOT RESTRAINT

3.4.9 Visual Contrast at Worksite

The Human Landing System shall design worksites and all associated equipment, such as labeling, markings, and displays to be clearly readable by crewmembers in extreme lighting conditions. **[EVASC.0047]**

Rationale: EVA crewmembers require adequate lighting to safely and efficiently perform the EVA tasks, including reading of hardware labels while EVA. Extreme lighting conditions range from both maximum solar irradiance (1370 W/m² at 1 Atomic Unit (AU)) and darkness with widely varying angles of incidence and these conditions can challenge the crewmember's ability to interpret EVA labels. Thus, all labels to be read by the EVA crewmember while EVA must all be designed with extreme lighting conditions in mind. For instance, EVA crewmembers utilize EVA Helmet Visors that reduce glare and direct sunlight incidence on the EVA crewmembers' eyes. Similarly, the xEMU provides its own EVA suit-mounted lights that ensure minimum required lighting is immediately available at the EVA worksite

during eclipse or shaded operations. Vehicle and hardware builders must demonstrate designs are legible in these extreme conditions and that the design, while acceptable in one condition (such as maximum solar irradiance) does not render it illegible in the other (such as darkness).

3.5 LOADS

3.5.1 Tether Attach Points

3.5.1.1 EVA Handle

The Human Landing System shall design EVA handles on removable equipment that is only intended for handling to be colored appropriately. **[EVASC.0033]**

Rationale: The intent is to ensure that if the crewmember only needs to handle the ORU versus translate over or across it, the additional loading requirements on the handle are not necessary. The EVA Handle is identical to the EVA Handhold with the exception that the Handle is not certified to support crewmember induced translation loads along with providing an equipment tether point. Colored appropriately in this case means clear anodized to distinguish it from the yellow anodized (certified for translation aid) and makes it obvious that it will not be used along the primary translation path. Reference requirement [EVASC.0117] for handhold/handrails that are capable of withstanding the loads.

3.5.1.2 EVA Tether Points

The Human Landing System shall design non-soft-goods tether point for a minimum load of 75 lbf (334 N) or the weight of the item in 1-g (whichever is greater) in any direction in per the EVA Tether Point Dimensions Figure. **[EVASC.0048]**

Rationale: This requirement applies to the equipment tether attach points, and not to crewmember safety attach points. The tether attach point is designed such that two equipment hooks can attach to it for transfer of hardware from one tether to another. Other types of tether attach points, like tether points integral to existing structure, are also acceptable, but shall meet the intent of EVA Tether Point Dimensions Figure in minimum hole size and maximum cross sectional dimensions. Tether points design features should allow the tether point to be accessed with a hook without manipulation. This is considered to be a crewmember one-handed operational task. For example, soft goods tether loops shall be stiff, and key ring-type tether loops shall be rigidly secured to prevent movement during tethering operations.

DRAFT

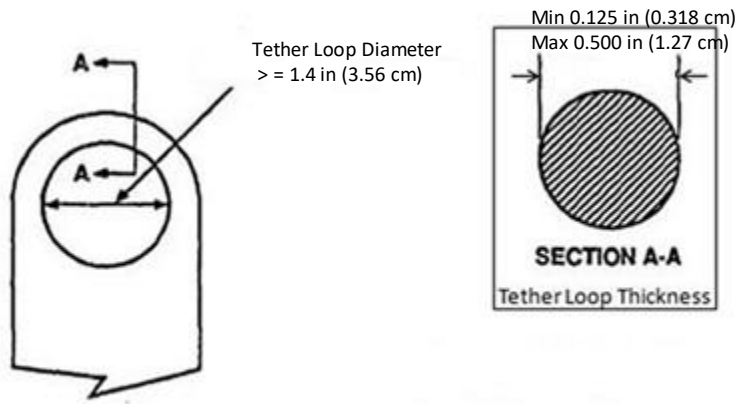

FIGURE 3.5.1.2-1 EVA TETHER POINT DIMENSIONS

3.5.1.3 EVA Equipment Tether Point Loads

The Human Landing System shall design EVA tether points to a limit load of 75 lbf (334 N) (concentrated load-pull in any direction). **[EVASC.0049]**

Rationale: This requirement applies to the equipment tether attach points, and not to crewmember safety attach points. EVA *Tether points must be able to withstand the maximum load of an object up to 75 lbf, which is the limit load for the equipment tethers. This is different for safety tether which have a greater load capacity.*

3.5.1.4 Soft Goods Tether Point Loads

The Human Landing System shall design soft goods tether point to a limit load of 30 lbf (133 N) or the weight of the item 1-g (whichever is greater) in any direction that accommodate EVA Tether hooks in accordance with the EVA Tether Point Dimensions Figure in requirement [EVASC.0048]. **[EVASC.0134]**

Rationale: This requirement is applicable to any hardware that includes an integral soft good tether point attached to soft good hardware. [EVASC.0033] Tether Point Dimensions Figure outlines the cross-section diameter (tether loop thickness) maximum of 0.500 inches. The cross-section needs to be maintained to ensure that the EVA crew hook does not slide off.

3.5.2 Microgravity EVA Crew-Induced Loads

The Human Landing System shall design external hardware to withstand specified EVA crew-induced loads as defined in the Microgravity EVA-Induced Loads Table. **[EVASC.0050]**

Rationale: The hardware, when exposed to Microgravity EVA-crew-induced loads should not create a hazardous condition, suffer loss of structural integrity, or suffer a loss of functionality. These loads apply to any hardware that is accessible to EVA crew contact. Reference EVA-EXP-0032, EVA-ISS Interface Definition Document for loads that are induced into the xEMU suit by historically used ISS EVA tools. This addresses NASA-STD-3001 V2 standard [V2 9027].

TABLE 3.5.2-1 MICROGRAVITY EVA-INDUCED LOADS

Design Limit Load Type	Limit Load	Type of Loading	Direction	Category of Structure	Application Comments
EVA Handrail/ Handhold– Primary Translation Path	220 lbf	Quasi–static load applied over 3.0-in. length of hand- rail or handhold at worst location	Any direction	Handrails, handholds, and supporting structure	This load applied to the translation path used by the crewmember to return to the Airlock (A/L).
Handrail/ Handhold Moment– Primary Translation Path	F=100 lbf M=600 in–lb	Quasi–static concentrated load at worst location	Apply 100 lbf resultant force in any direction simultaneously with the bending moment, applied as a couple of 2 opposing handhold forces separated by 6 in.[1]	Handrails, handholds, and supporting structure	This load applied to the translation path, which is the path used by the crewmember to return to the A/L.
Crew Tether Attach	200 lbf	Quasi–static load applied to crew tether loop attachment	Any direction	Crew tether loops/handrail tether point, attach hard-ware and support structure	
EVA Kickoff, Push–Off Force of Tethered Crewmember	200 lbf	Quasi–static concentrated load over a 3.0-in.-diameter circular area	Perpendicular to and directed toward surface	All primary and secondary structure inside or near (within 24 in.) a translation path or worksite	This maximum kick–off or push–off load applies where the crewmember is using the hardware to

Design Limit Load Type	Limit Load	Type of Loading	Direction	Category of Structure	Application Comments
		at worst location			provide a reaction point during translation.
Inadvertent Kick, Bump	125 lbf	Quasi-static load applied over a 0.5-inch diameter circular area	Any direction	Secondary structure near (within 24 in.) a translation path or worksite	This is an accidental impact. It should be applied to hardware near (within 24 in.) translation paths and/or worksites.
Tool impact	125 lbf	Concentrated load on a 0.06-in.-dia. circular area.	Any direction	Windows and exposed glass surfaces or other shatterable materials	Applicable to all shatterable materials within translation paths or worksites.
Force Application (EVA Handling Load)	45 lbf (35 in-lbf for connector paths for mate/de-mate or connector)	Quasi-static concentrated load over a 1.25-in.-dia. circular area	Any direction	ORUs and nonstructural closures and covers (including shields, cables, cable connector brackets, cable connector panels, cable clamps)	Load can be applied any time to any hardware by EVA crewmember when in foot restraint. All hardware must be designed to this load as a minimum. This force would be applied by palm of glove, tip of boot, or knee.
EVA Load for Design of APFR[2] Supporting Structure	274 lbf force; 4200 in-lb moment	Quasi-static loads applied at APFR socket to structure interface	Force in any direction; moment about any axis	All structure on which a foot restraint is attached	Force and moment applied simultaneously. Reference requirement [EVASC.0143]

DRAFT

Design Limit Load Type	Limit Load	Type of Loading	Direction	Category of Structure	Application Comments
EVA Tool Tether Attach Point	75 lbf	Concentrated load-pull (tension)	Any direction	Any structures supporting tool tether attach points	Hard structurally mounted tether points.
APFR Ingress	60 lbf	Quasi−static load applied over 3.0 inch length of handrail or handhold at worst location	Any direction	EVA handrail	This load applied to any handrail used by crew to assist in APFR ingress and egress
Waist Tether	75 lbf	Quasi−static concentrated load applied at worst location	Any direction	EVA Handrail	Local tethering load. The large crew hook on waist tether attached to handrail. Small crew hook on waist tether attached to xEMU suit
Retracting End Effector Assembly (REEA) on Modular Mini Work Station (MMWS)	75 lbf	Quasi−static concentrated load applied at worst location	Any direction	EVA Handrail	Local tethering load
BRT (loose or rigidized)	75 lbf	Quasi−static concentrated load applied at worst location	Any direction	EVA Handrail	Local tethering load

DRAFT

Design Limit Load Type	Limit Load	Type of Loading	Direction	Category of Structure	Application Comments
BRT (loose or rigidized)	300 in-lbs	Quasi−static load applied at worst location	Any direction	EVA Handrail	Local tethering load
Hatches	187 lbf	Quasi-static concentrated load over a 3.0-in.-dia. circular area at worst location	Any direction	Hatches	

Table Numbered Notes:

[1]Reference the Opposing Forces on Handrail/Handhold Figure for primary translation path

[2]Articulating Portable Foot Restraint (APFR) – EVA load for design of APFR supporting structure incorporates the evaluation for kick load, layback, quick grab, handling, and oscillatory loads.

Overall General Notes:

1. Pry loads, as defined as the load imparted to a handrail by a U.S. EVA crew hook, have been determined to have a sufficiently low probability of occurring to render the load case non−credible. Therefore, pry loads are not to be considered as an EVA Induced Load.
2. EVA Microgravity EVA Induced Loads for inadvertent kick and kick-off, push-off loads do not apply to hardware or worksites, which are assembled or maintained using only robotic systems (or only a crewmember restrained on robotic system)

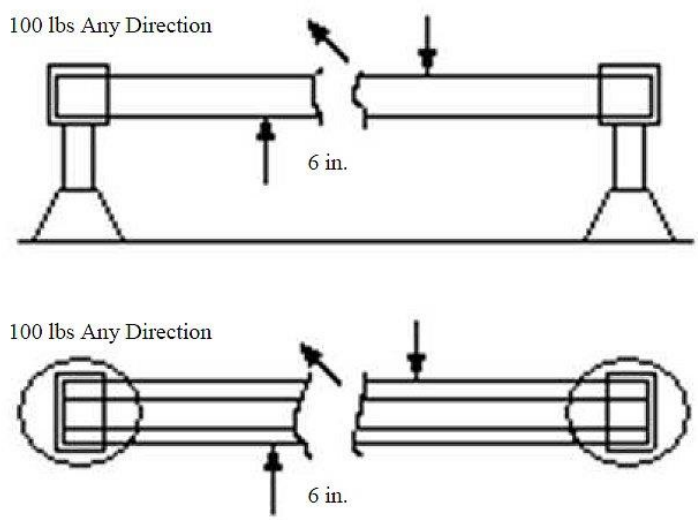

FIGURE 3.5.2-1 OPPOSING FORCES ON HANDRAIL/HANDHOLD

3.5.3 Partial Gravity EVA Crew-Induced Loads

The Human Landing System shall design external hardware to withstand specified EVA crew-induced loads as defined in the Partial Gravity EVA-Induced Loads Table. **[EVASC.0155]**

Rationale: The hardware, when exposed to Partial Gravity EVA-crew-induced loads should not create a hazardous condition, suffer loss of structural integrity, or suffer a loss of functionality. These loads apply to any hardware that is accessible to EVA crew contact.

TABLE 3.5.3-1 PARTIAL GRAVITY EVA-INDUCED LOADS <TBD-HLS-EVA-006>

Design Limit Load Type	Limit Load	Type of Loading	Direction	Category of Structure	Application Comments

3.5.4 EVA Actuated Loads

Human Landing System will have a crew or crew actuated tool interface that shall be operable by the loads defined in the Miscellaneous On-Orbit Crew Induced Limit Loads Table. **[EVASC.0018]**

Rationale: Dexterity and tactility are degraded when using a pressurized suit which necessitates increased levels of tactile feedback. This does not include the EVA on-orbit induced loads (reference requirement [EVASC.0050] for EVA induced loads. The intent of this requirement is from the perspective of what works best for EVA. This may or may not be acceptable for EVR systems. Depending on the Program this requirement is applied to and their plans for EVA and EVR, tailoring may be required.

TABLE 3.5.3-1 MISCELLANEOUS ON−ORBIT CREW INDUCED LIMIT LOADS

Crew System	Type of Load	Limit Load	Direction of Load
Repetitive Actuation Force	Concentrated Load	Actuation forces shall not exceed 20 lbf (89 N) for hand tools and other hardware items which require repetitive/continuous operation.	Any Direction
Finger Actuation Force	Concentrated Load	The actuation of hardware designed for finger operation shall be 2 to 10 lb (9 to 44 N).	Any Direction

Crew System	Type of Load	Limit Load	Direction of Load
Actuation Torque	Concentrated Load	Knobs, fasteners, latches, and other hardware requiring a twisting/turning hand/wrist motion shall have a maximum actuation torque of 30 in-lb (3.4 Nm).	CW or CCW
Non-repetitive Actuation Force	Concentrated Load	Actuation forces of hardware shall not exceed 25 lbf (111 N) for momentary, non-repetitive gross motor skill operations in foot restraints or BRT, such as operating a latching mechanism or opening/closing a door.	Any Direction
EVA driven bolts	Concentrated Load	<20 lbf for engagement or disengagement of the ratchet type tools onto the bolt.* This force should not be required to be maintained while driving the bolt. 24 in-oz min torque for installation of bolt**	Axial
		24 in-oz min torque for installation of bolt**	CW or CCW
EVA Mechanical Control Feedback	Concentrated Load	>3.5 lb	Any Direction
EVA Hatches, Doors and Drawers	Concentrated Load	<25 lb	Any Direction
EVA Connectors	Concentrated Load	<35 in-lb (mate/demate) for twisting-type connectors (i.e.: NATC)	CW or CCW
		<25 lb for bail and pull connectors (i.e.: NZGL)	Any direction
Mounting Hardware (install/remove) (EVA)	Concentrated Load	<25 lb	Any Direction
Fastener Torque (without torque reaction interface)	Concentrated Load	<25 ft-lb***	CW or CCW
High Torque Fasteners (with torque reaction interface)	Concentrated Load	<100 ft-lb	CW or CCW

DRAFT

*Note: Example – A tool must overcome the anti-rotation device inside a modified micro fixture.

**Note: The rationale for this is 7 in-oz max torque for back drive of the ratchet wrench.

***Note: The Pistol Grip Tool (PGT) with associated sockets has lower limits that are based on tool stack-up and RPMs. The details are shown in SSP 30256:001 Section 3.2.1.4.

3.5.5 Handhold/Handrail Torsional Loading

The Human Landing System shall mount handholds/handrails to withstand a minimum torsional limit load with values as derived and documented in the Worst Cases Design Loading at Vehicle Mounting Interfaces Table, Resultant Forces and Resultant Moments, using the worst case direction and point of application for the handhold/handrail under consideration. **[EVASC.0051]**

Rationale: This loading condition is an enveloping case for EVA hardware that attaches to handrails for crew restraint use. The analysis needs to include the appropriate factors of safety. For other EVA handrail loading configurations, refer to SSP 57003, Section G.3.4.1.

TABLE 3.5.4-1 WORST CASES DESIGN LOADING AT VEHICLE MOUNTING INTERFACE

GFE Handrail	Description	Forces (lbf) and Moments (in-lbs)						RSS	
		Fx (lbf)	Fy (lbf)	Fz (lbf)	Mx (in-lbs)	My (in-lbs)	Mz (in-lbs)	Resultant Forces (RSS, lbf)	Resultant Moment (RSS, in-lbf)
		Shear		Axial	Moment		Torsion		
SEG33106347-8XX	Top Mounted	263	-2	150	10	416	29	303	417
		2	-207	-1	542	-1	-29	207	543
		16	-148	-1	396	31	-76	149	405
		45	-1	208	7	71	2	213	71

3.5.6 WIF Structural Loading

The Human Landing System shall maintain positive margins of safety for loads at the WIF to structure interface of 274 lbf in any direction and a moment of 4200 in-lbs in any direction, simultaneously as defined in the Top Mounted WIF Worksite Half Loading Criteria Figure. **[EVASC.0143]**

Rationale: Ensures that the structural loading for the hardware where the WIF is attached has been defined. This provides additional clarification to the Microgravity EVA Crew Induced Loads requirement [EVASC.0050] table line item for EVA Load for Design of APFR Supporting Structure.

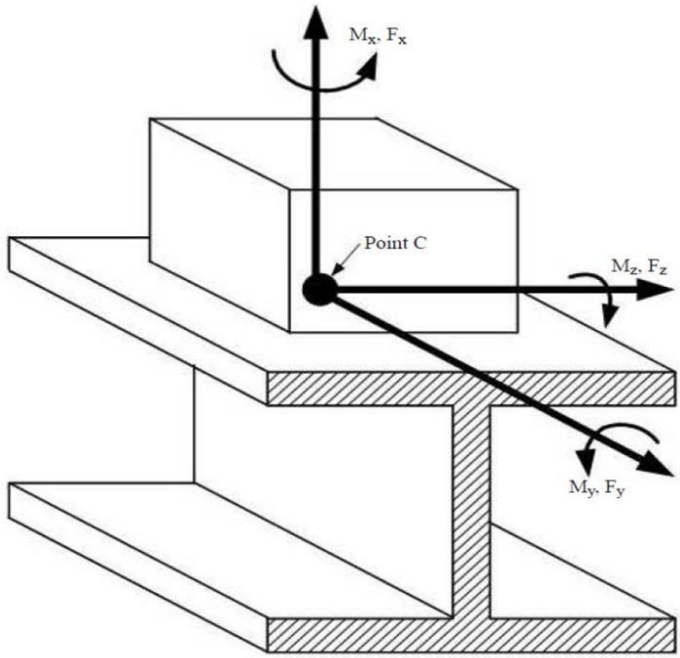

Maximum Interface Loads	
Moment	**Force**
Any Direction 4200 in·lbs	Any Direction 274 lbf
Notes: 1. The above loads should be applied simultaneously. 2. All loads are to be applied at Point C. 3. Point C, the force and moment origin, is located at the center of the bolt pattern at the mating surface.	

FIGURE 3.5.5-1 TOP MOUNTED WIF WORKSITE HALF LOADING CRITERIA

3.6 CONNECTORS

Unless otherwise specified, the requirements in this section apply to all types of EVA operable connectors, including electrical, fluid, fiber optic, structural, etc.

DRAFT

3.6.1 One-Handed EVA Operable Connectors

The Human Landing System shall design connectors to be aligned and mated/demated one-handed, while wearing a pressurized glove using either hand, without the use of a tool. **[EVASC.0053]**

Rationale: The intent is to not require the use of a foot restraint for stabilization to operate the connectors. One-handed alignment and mating is necessary so that the other hand can be used for stabilization if foot restraints are not provided. If a foot restraint is provided, connectors can be held in two hands and reacted against each other.

3.6.2 Connector Accessibility

The Human Landing System shall design individual connectors capable of being mated, demated, or replaced without having to remove or replace other connectors. **[EVASC.0054]**

Rationale: Experience has shown that proper spacing connectors can be utilized to provide easier accessibility without having to remove or replace other connectors.

3.6.3 Gloved-Hand Connector Accessibility

The Human Landing System shall provide gloved hand access per Gloved-Hand Clearance Figure in requirement [EVASC.0003]) around any point of the connector that the crew has to actuate, including sweep of the actuating mechanism if applicable. **[EVASC.0138]**

Rationale: It does not preclude the use of protective hardware such as covers, caps, etc. Experience has shown that closer spacing for small, simple connectors can be utilized to provide more efficient packaging of the EVA worksite.

3.6.4 Connector Spacing

Connector spacing for small to medium bail and wingtab type connectors shall be designed to approach the minimum spacing requirements shown in the Connector Spacing Figure. **[EVASC.0130]**

Rationale: When utilizing the spacing outlined in the Connector Spacing Figure, it may result in greater/or less than the gloved-hand access requirement [EVASC.0003] in certain directions. If there is not sufficient real estate to meet the gloved hand requirement [EVASC.0003], the Connector Spacing Figure illustrates what was successful on past Programs and can be considered with the appropriate paperwork and EVA evaluations.

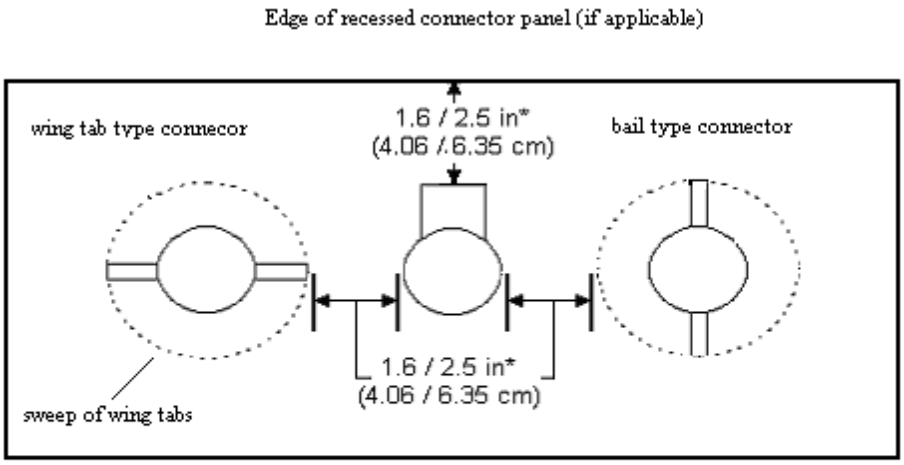

*Spacing requirement increases to 2.5 in for multiple rows of connectors.

These are minimum dimensions and should be used only where packaging issues exist.

FIGURE 3.6.4-1 CONNECTOR SPACING

3.6.5 Incorrect Connector Mating Prevention

The Human Landing System shall design connectors to prevent incorrect mating or cross-connection. **[EVASC.0055]**

Rationale: Intent is to provide only one possible mechanical combination for connector mating to ensure that all system connections are manufactured as designed and installed so they cannot be mated/demated incorrectly or in the wrong orientation. Identification alone is not sufficient to preclude incorrect orientation. This addresses the intent of NASA-STD-3001 V2 standard [V2 9032].

3.6.6 Connector Coding

The Human Landing System shall locate unique identifier labels or codes on both sides of mating connectors and associated items that are visible when both connected and disconnected. **[EVASC.0056]**

Rationale: Mechanical methods of ensuring correct mating of connectors are not sufficient alone. To ensure efficient EVA operations, labels are also needed to mate the correct connectors. Matching EVA connector pair coding simplifies training, eliminates confusion, and speeds operations. Reference EVA-EXP-0049, Exploration EVA System Labeling Guide for details on connector labeling.

3.6.7 Connector Protective Caps

The Human Landing System shall design tether capable (or tethered) protective caps for plugs and jacks whenever they are not connected to the mating part to prevent physical damage and contamination that account for the following:

- Protection from moisture and other foreign materials
- Protection against damage to sealing surfaces, threads or pins
- Resistance to abrasion, chipping, or flaking
- Same finish and material as the connector it is protecting (ensuring compatibility with the connector material)
- Brightly colored red (for those not used in flight), ensure that is removed prior to flight
- Maintained at cleanliness level equivalent to plug or jack that is being protected. **[EVASC.0057]**

Rationale: The intent is to protect the plugs and receptacles from moisture and other foreign materials and damage to sealing surfaces, threads, and pins. Also to ensure compatibility with the connector that is being protected.

3.6.8 Connector Rotational Travel

The Human Landing System shall ensure that the rotational travel of the connector is limited to a maximum of 180° for installation or removal of twist-on connectors. **[EVASC.0058]**

Rationale: Performing a twist on/off motion is considered awkward and difficult in a pressurized xEMU suit.

3.6.9 Connector Locking Feature

The Human Landing System shall provide connector plugs that include a locking feature to prevent inadvertent demate. **[EVASC.0059]**

Rationale: Experience has shown that many of the EVA worksites are congested. Design of the worksite should include features which aid in precluding inadvertent demate that could result in a hazardous situation.

3.6.10 Visible Connector Alignment Markings

The Humans Landing System shall design visible alignment markings or other feature on connectors to ensure proper alignment during mating/demating. **[EVASC.0060]**

Rationale: Connector alignment should not require so much precision as to be difficult to operate one-handed.

3.6.11 Connector Locking Ring

The Human Landing System shall design or use connectors whose locking ring cannot turn independently from the connector body. **[EVASC.0061]**

Rationale: The crew should not have to align both the ring and the body of the connector separately. Pressurized, EVA suited operation of hardware in microgravity is more difficult than typical 1-g operation of the same hardware. Experience has shown that to ensure successful completion of EVA tasks, hardware operations must be kept as simple as possible. Utilizing a connector, which requires the alignment of both the ring and the body of the connector separately, is an unnecessary complication.

3.6.12 Connector Mating Status

The Human Landing System shall design connectors that indicate full mate/demate status. **[EVASC.0062]**

Rationale: Full connector mating includes pin engagement. Alignment markings, pin detents, or an over center feature are examples of features that can indicate connector mating status. It is especially important that EVA crewmembers know if connectors have been successfully mated/demated during periods of Loss of Signal (LOS).

3.6.13 Connector Ultimate Load

Connector backshells shall withstand ultimate load as defined in JSC 65828, Structural Design Requirements and Factors of Safety for Spaceflight Hardware. **[EVASC.0064]**

Rationale: Strain relief helps to prevent breakage due to induced loading. Connector backshells designed to provide strain relief, must still preclude sharp edges, pinch points and other hazards as defined in Section 3.9.

3.6.14 Electrical Connectors

3.6.14.1 Mating/Demating of Powered Connections

The Human Landing System shall design connectors mated/demated during an EVA to meet NASA-STD-3001 V2 standard [V2 9020]. **[EVASC.0052]**

Rationale: This requirement is intended to prevent shock hazards to the EVA crewmembers. The xEMU suit provides no inherent protection against electrical shock hazards. Therefore, the IVA limits established in NASA-STD-3001 V2 are to be met.

3.6.14.2 Connectors - Electrical Bonding

The Human Landing System shall design electrical connector assemblies to provide electrical bonding for wiring harness shielding of cable, and to provide conductive outer surfaces of electrical and electronic assemblies in accordance with the applicable electrical bonding standard. **[EVASC.0065]**

Rationale: Electrical current will take the path of least resistance and not through the higher resistance suit, which will prevent a shock hazard to the EVA crewmember. Reference NASA-STD-4003, Electrical Bonding for NASA Launch Vehicles, Spacecraft, Payloads, and Flight Equipment.

3.6.14.3 Scoop-Proof Electrical Connector Design

The Human Landing System shall design electrical connectors to prevent electrical pins from incorrectly contacting the opposing connector half during mating/demating. **[EVASC.0066]**

Rationale: Using scoop-proof connectors is one way to meet this requirement. Scoop-proof connectors minimizes creation of potential hazards (electrical shock, sparks, arcs, or molten metal) as well as potential pin damage leading to the inability to connect the connector.

3.6.14.4 Connector Grip Point

The Human Landing System shall design connector backshells to provide for engagement/disengagement with the pressurized gloved hand. **[EVASC.0063]**

Rationale: A grip point provides access for the pressurized gloved hand to operate the connector.

3.6.14.5 Connector Disconnection

The Human Landing System shall design electrical connectors to require less than one complete turn to disconnect. **[EVASC.0139]**

Rationale: Having less than one full turn aids in less fatigue for the pressurized glove operation.

3.6.14.6 Arc Containment

The Human Landing System shall design electrical connectors that confine and isolate electrical arcs and sparks during mating/demating. **[EVASC.0131]**

Rationale: Certain provisions are required when electrical connectors must be mated or demated during EVA to protect the crew from generation of molten metal, damage to safety critical circuits, and, potentially, shock, all of which are considered catastrophic hazards.

3.6.15 Fluid Connectors

3.6.15.1 Tethering

The Human Landing System shall restrain or otherwise capture serviceable fluid flex hoses and lines with delta pressure or under pressure. **[EVASC.0132]**

Rationale: Delta pressure in a line could cause the line to move/flex and pressurized lines can rigidize in unwanted configurations so both should be accounted for. Hose whip can occur as a result of release of pressure in a line or from hose memory, and captive features are required to prevent hose whip that could result in crew injury or damage to adjacent hardware. This requirement does not apply to a xEMU suit umbilical.

3.6.15.2 Venting Feature

The Human Landing System shall ensure that serviceable fluid connectors and lines contain a method for removing pressure before demating. **[EVASC.0133]**

Rationale: Excess fluid and pressure in a connector during demating may expose the crewmember to hazardous materials (either to the suit or to the IVA environment if brought back inside the vehicle) or to hazardous forces when the pressure is released during separation. This requirement does not apply to a xEMU suit umbilical.

3.6.15.3 Indication of Pressure Flow – Nonbrazed or Nonwelded

All nonbrazed or nonwelded gas and liquid lines shall be provided with a positive indication of the gas pressure/fluid flow to verify that the line is passive before disconnection of connectors. **[EVASC.0145]**

Rationale: Need to ensure that adequately addressing the indication of flow for fluid connectors.

3.6.15.4 Indication of Pressure Flow – Quick Disconnect

Any liquid or gas lines equipped with quick disconnect connector which are designed to be EVA operated under pressure shall not be required to be fitted with pressure/flow indicators. **[EVASC.0146]**

Rationale: Indication of pressure/flow state is not necessary if the QD is designed to be operated regardless of system state.

3.7 EVA OPERABLE FASTENERS

The following section outlines those fasteners that are to be operated by an EVA crewmember in a pressurized xEMU suit. Reference Appendix D for definition of Common Tools and Fasteners.

3.7.1.1 Captive Fastener Design

The Human Landing System shall design all EVA operable fasteners to be captive without the use of tethers or lanyards as the captive method. **[EVASC.0068]**

Rationale: Loose parts or hardware poses an impact hazard to the EVA crewmember or the vehicle. Loss of parts/hardware required for critical functions is also considered a hazard.

3.7.1.2 Locking Features

3.7.1.2.1 Prohibited Locking Methods for Fasteners

The Human Landing System shall provide a method for locking EVA operable fasteners that does not involve the use of safety wire, cotter pins, or jam nuts. **[EVASC.0069]**

Rationale: Safety wire and cotter pins may be a source for sharp edges, and therefore prohibited. Safety wire and cotter pins may be used on internal fasteners only. The use of anaerobic locking compounds as the sole secondary locking feature on structural or critical fasteners has been shown to be ineffective in the vacuum environment.

3.7.1.2.2 Securing of Threaded Fasteners

Threaded fasteners that perform a safety-critical function shall comply with NASA-STD-5020, Requirements for Threaded Fastening Systems in Spaceflight Hardware. **[EVASC.0147]**

Rationale: This requirement does not apply to fasteners that are considered to be any of the following: not safety critical, are internal to components, or shown to be contained.

3.7.1.3 EVA Hand-Actuated Fasteners Operation

3.7.1.3.1 One-Handed Fastener Operations

The Human Landing System shall design fasteners to be manipulated without a tool to be operable one-handed using a pressurized xEMU glove. **[EVASC.0067]**

Rationale: The hand-operable fastener should not require a high degree of dexterity such that it necessitates two-handed operation. Hand-operated fasteners do not require a tool.

3.7.1.3.2 Push and Turn Fasteners

The Human Landing System shall design any push and turn fasteners that are EVA operable to not exceed a maximum spring force of 3 lbf (13N). **[EVASC.0071]**

Rationale: Limiting actuation force provides improved performance with a pressurized gloved-hand.

3.7.1.3.3 Scalloped Knobs

The Human Landing System shall design scalloped knobs for actuation by the pressurized EVA glove with no fewer than four (4) and no more than eight (8) scallops. **[EVASC.0072]**

Rationale: Knob design specifications will improve performance when used with a pressurized gloved-hand. Three examples of knobs designed for EVA hand actuation are Pitch Joint Assembly Articulating Portable Foot Restraint (APFR), ISS (SDG33107506), EVA Knob Assembly Bridge Clamp (SED33107181), and 1.0 Inch Quick Disconnect (QD) Button Depress Tool (SEG33114987). Reference the Scalloped Knob Example Figure in requirement [EVASC.0073].

3.7.1.3.4 Knobs Head Diameter and Height

The Human Landing System shall design knobs for xEMU suited pressurized gloved hand operation to have head diameters between the ranges of 1.5 in. – 2.0 in with a minimum head height of 0.75 in. **[EVASC.0073]**

Rationale: Knob design specifications will improve performance when used with a gloved hand. The minimum scallop value allows for deeper scallops as needed. An example of a knob with significantly deeper scallops is in the Scalloped Knob Example Figure, which utilizes a "+" shape.

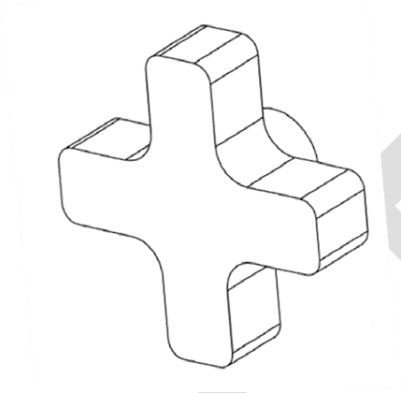

FIGURE 3.7.1.3.4-1 SCALLOPED KNOB EXAMPLE

3.7.1.3.5 EVA Hand-Actuated Fasteners Contingency Operation

The Human Landing System shall provide an external 7/16-in. hexagonal drive interface on rotational fasteners per Section 3.7.1.5 for contingency operation with a hand tool. **[EVASC.0074]**

Rationale: Same size fastener leads to a single tool that works for all cases.

3.7.1.4 EVA Push-in Place (PIP) Pins

Refer to Appendix B: EVA Best Practices for PIP Pins (EVABP-2). Currently only AviBank pins designated as “Space Pins” are approved for use. Use of PIP Pins has been closely scrutinized by the Structures and Mechanisms System and these pins are considered to be Design for Minimum Risk (DFMR)/one-fault-tolerant-equivalent. Future part numbers from AviBank may be designated as “Space Pins” as part of by agreement with NASA. Please verify acceptability of specific part numbers with the Structures and Mechanisms System Team when using PIP pins.

3.7.1.4.1 EVA PIP Pin Grasping Interface

The Human Landing System shall mount a 1.5-in (3.8-cm) minimum diameter ring or T-handle to the pin that is compatible with a pressurized glove. **[EVASC.0075]**

Rationale: T-handles or rings large enough to use with a pressurized gloved hand are required to simplify use with a gloved hand and to minimize the risk of lost hardware. It is preferred that the ring is mounted to the actuation shaft.

3.7.1.4.2 PIP Pin Restraint Tether

The Human Landing System shall attach a restraint tether to the body of the pin and not to the activation mechanism. **[EVASC.0076]**

Rationale: PIP pins may also be captive to the structure, which is preferable to a separate tether.

3.7.1.4.3 PIP Pin Drive-Out Feature

The Human Landing System shall provide a drive-out feature so the PIP pin can be removed if it becomes jammed. **[EVASC.0077]**

Rationale: All PIP pins are subject to jamming. Having a drive-out feature helps limit risk associated with this known failure mode common to all PIP pins.

3.7.1.5 Tool-Actuated Fasteners

3.7.1.5.1 Driver-Type Push Force Tools

The Human Landing System shall design fasteners that do not require a driver-type hand tool that requires a push force greater than 2 lbf (9N) to maintain tool engagement while providing torque. **[EVASC.0078]**

Rationale: Slotted and Phillips screws and screwdrivers are prohibited for EVA interface use. The dexterity that is lost when using pressurized EVA gloves makes using fasteners, which require a constant force to remain engaged impractical.

3.7.1.5.2 EVA Fastener Head

All EVA actuated bolts shall conform to the following configuration from the minimum to maximum operational temperatures to enable interface with the standard EVA hand and power tools:

- 7/16 inch 12−point EVA compatible bolt
- 7/16 inch hexagonal EVA and robotics compatible bolt **[EVASC.0079]**

Rationale: This requirement ensures compatibility with microgravity EVA tools and provides for common EVA tool interface between vehicles. Other size EVA drivers

exist, but are discouraged for numerous reasons (availability, commonality, EVA overhead, etc.). If required by hardware design, alternate EVA fasteners can be used following approval through the appropriate exception process. For other EVA Fastener Head configurations, refer to SSP 30256, EVA Interface Control Document Section 3.1.4 (in addition PIRN Number 30256-NA-0187).

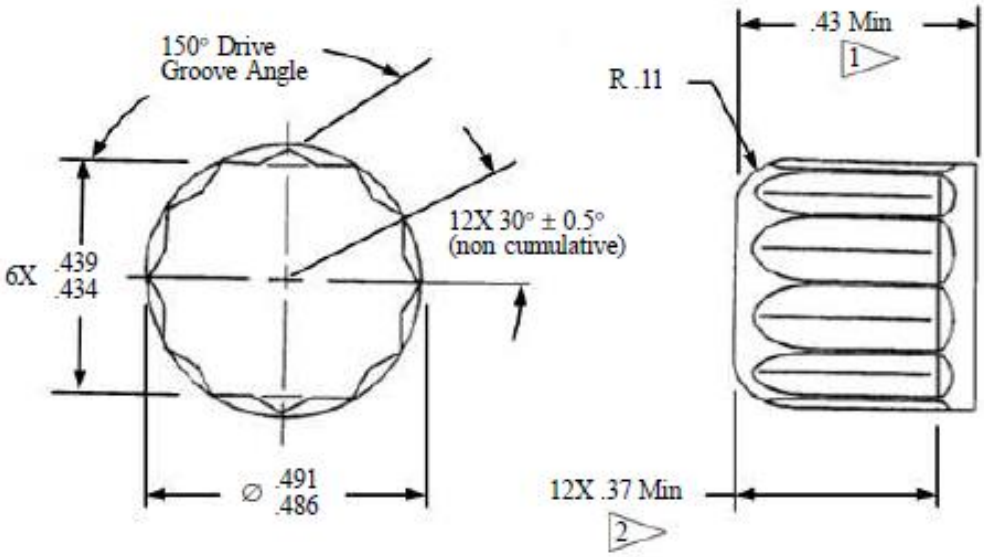

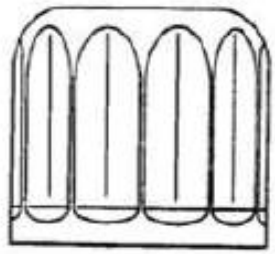

Notes:
1. All dimensions in inches

Flag Notes:
1 Recommended dimensions .43 to .45
2 Recommended dimensions .37 to .38

Tolerances:
1. Tolerances are user defined except where shown

FIGURE 3.7.1.5.2-1 7/16 IN. 12 POINT EVA COMPATIBLE BOLT

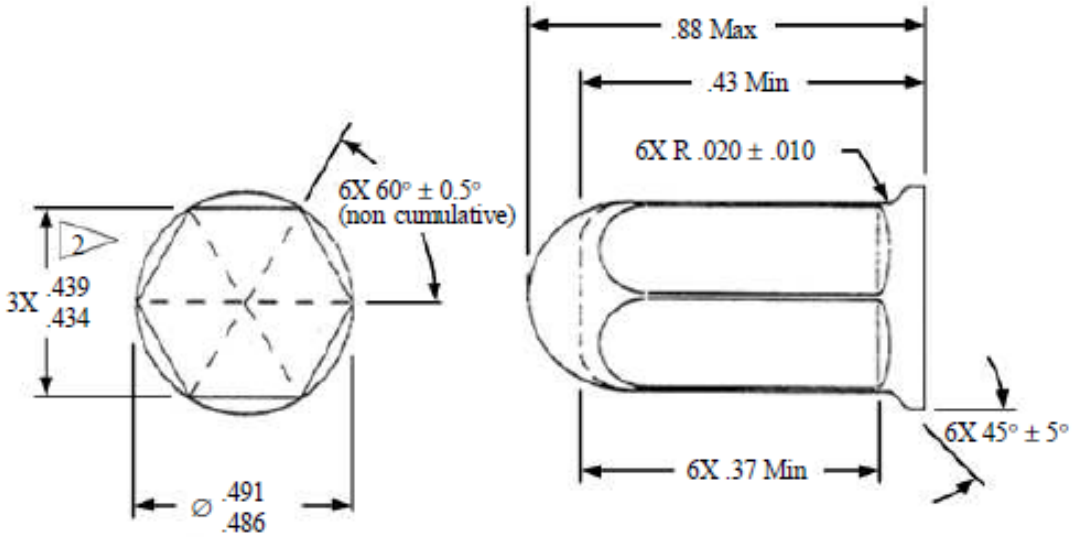

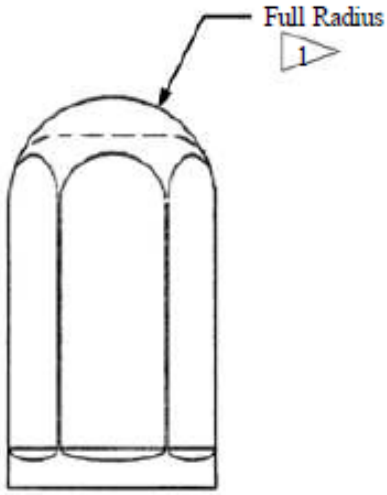

Notes:
1. All dimension in inches
2. Hex Bolt Shoulder may be removed to accommodate mechanism activation at base of the bolt head
3. Bolt must be co–located with a Micro Conical Fitting, Micro, or H–Handle to be robot compatible.

Flag Notes:

1 .11 edge radius may be substituted for full radius

2 The 6 point gages could potentially fail bolts that are within 10% of the upper and lower ICD range. The recommended dimensions are .438 to .435. Hardware providers should try to build bolts towards the middle of the ICD specification.

Tolerances:
1. Tolerances are user defined except where shown

FIGURE 3.7.1.5.2-2 7/16 IN. HEXAGONAL EVA AND ROBOTIC COMPATIBLE BOLT

3.7.1.5.3 Fastener Torque Data

The Human Landing System shall deliver Torque Data as outlined in the Fastener Torque Data Table when EVA fastener torqueing specifications is required. **[EVASC.0151]**

Rationale: The intent is to ensure that the Human Landing System delivers the torque instructions for on-orbit actuation.

TABLE 3.7.1.5.3-1 FASTENER TORQUE DATA <TBR-HLS-EVA-001>

Row #	Description	Additional Information
1	Fastener Part Number	Additional cautions, in the form of training and updates to EVA procedures, should be taken
2	Next Assembly Part Number of Fastener	
3	Insert or Part Number	
4	Next Assembly Insert of Nut Part Number	
5	EVA Label for Bolt or Nut Next Higher Assembly	
6	Name/Description	
7	Bolt is used to secure ORU (Yes/No)	
8	ORU Part Number	
9	Ground Installation Torque	
10	Maximum On-Orbit Installation Torque	
11	Minimum On-Orbit Installation Torque	
12	No. of bolt turns for clamp-up/Removal	
13	More important: Torque OR Turns OR Both	During on-orbit installation, state if it is more important for the crewmember to achieve the torque value specified or the number of turns specified. If both torque and turns are required enter “Both”.
14	Maximum Expected Breakaway torque	This should be a value for breakaway that is the highest you would expect to see whether the bolt was installed on the ground or on-orbit. For non-microconical interfaces, if value is greater than 310 in-lbs, fill in row 15.

DRAFT

Row #	Description	Additional Information
15	Maximum Expected Breakaway torque when install torque is per column. 11 (This column is filled in only if value in Row 14 is greater than 310 in·lbs for non-microconical interfaces)	This value should also account for on-orbit temperature effects.
16a	Recommended Torque to use for Removal	This is the recommended torque value to set the EVA tool for removal of the bolt. If Row 15 has been filled in, enter the value in Row 16 based on Row. 15.
16b	Recommended Torque to use for Installation	This is the recommended torque value to set the EVA tool to for installation of the bolt.
19	Absolute Max. Torque not to be exceeded in order to prevent failure. Factor of Safety (FS) = 1.	Torque values specified are the torque applied at the head of the fastener independent of the tool or extension used. (This differs from all other rows where torque calculations are done with the approved Structural Integrity Factor for Safety Requirements).
20	Failure Mode if torque exceeded.	i.e. What item will fail first? What are the expected failure results: bolt thread failure, nut thread failure, bolt shank failure, secondary structure yield, secondary structure failure, primary structural yield, and primary structural failure? Etc. Again the failure predictions are based on a Factor of Safety of 1 (row 19)
21	Failure data from Analysis (A) or Test (T)	Specify whether data has been obtained from testing or from analysis.
22	Special Operations or constraints in order to minimize binding	If there are any special operations or constraints in order to minimize binding please specify. If none, leave blank. For example, describe any steps taken to prevent galling; however, galling is a very specific failure mode. Bolt binding does not always equal galling. Side loads, misalignment, thermal mismatch are all sources of binding that present similar to galling and if the design is vulnerable to these or any others, they should be described in this table.
23	Potential Recovery/Repair Schemes (including captive fastener replacement methods, if applicable)	Potential Recovery/Repair Schemes (including captive fastener replacement methods, if applicable) Expand on row 23 in note form: e.g. Note 2. Recovery scheme for this fastener is…..etc.

DRAFT

Row #	Description	Additional Information
24	Has this bolt been analyzed to be out, while all others remain installed to meet a Fail Safe Condition? Yes or No Note: This row (24) is for contingency reference only and must not be used for nominal or work ahead EVA planning.	This row should be filled in “yes” or “no” based on existing strength analysis.

General Notes:
1. Columns 17 and 18 are intentionally not used
2. Format for torque values: torque in-lbs (torque ft-lbs)

3.7.1.5.4 Power and Hand Tool Operability

The Human Landing System shall design or use fasteners installed with power tools to also be removable and/or installable with a hand-operated tool. **[EVASC.0080]**

Rationale: Hardware should be designed to be operated/torqued by a power tool and a hand operated tool for contingency/clearance issues. There is an option to use the ratchets or wrenches with sockets for the fasteners.

3.7.1.5.5 Fastener Gauge/Measurement

EVA bolt heads and threads shall be gauged/measured ensuring they meet dimensional requirements at the minimum to maximum operational temperatures prior to installation into assembly to verify all bolt head features can be inspected. **[EVASC.0141]**

Rationale: Gauging allows thermal tolerances to be assessed. Hardware should be designed to accept torque values with as wide a tolerance as possible. Thermal extremes can adversely affect a tools ability to provide specific torque. Provides verification of bolts prior to installation into assembly to prevent future issues with undersized/oversized bolt heads.

3.7.1.5.6 Fastener Torque Measurement

The Human Landing System shall measure and record running and final torque and provide it attached to the delivery paperwork. **[EVASC.0082]**

Rationale: If other material is used on the threads (lube or locking), then need to ensure that environmental conditions are taken into consideration for the measurement. Depending on the state of lubrication, the effects of temperature and pressure (i.e., vacuum) can significantly affect the friction characteristics of the sliding interfaces. Recorded tightening, running, and release torque values are to

be provided to the EVA Flight Hardware manager at the time of hardware delivery. For example if the hardware is delivered to the government on a DD250, it is expected that acceptance documentation would include this information.

3.7.1.5.7 Fastener Alignment Features

The Human Landing System shall provide alignment features to ensure initial engagement and preclude cross-threading. **[EVASC.0083]**

Rationale: Examples include chamfered threaded ends and/or bolt guides.

3.8 HARDWARE DESIGN

3.8.1 Fastener Drive Height

The Human Landing System shall design fasteners, which are planned to be operated by a hand or power tool, to have a minimum bolt head dimension as specified in the EVA Fastener Head requirement [EVASC.0079] incorporating an extra deep well on the socket and/or a wobble feature. **[EVASC.0084]**

Rationale: An extra deep well in the socket and/or a wobble feature helps mitigate stripping concerns. [EVASC.0084]. For ISS, 7/16-in double height hex-head bolt was chosen. The double bolt height is recommended for ease of use and versatility.

3.8.2 Battery Powered Devices

3.8.2.1 Battery Replacement

The Human Landing System shall design batteries that necessitate changeout via EVA to be replaceable at the worksite. **[EVASC.0085]**

Rationale: The intent is to ensure that if the battery must be changed during EVA, it is done at the worksite without the overhead of bringing it back inside the vehicle. Repressurization, depressurization and translation to and from worksites reduces the amount of time allotted to tasks during an EVA. Time is better managed replacing batteries that do not last as long as the intended task at the worksite.

3.8.2.2 Battery Capacity/Voltage Monitoring

Battery powered devices shall include battery monitoring capability to protect against catastrophic hazards and insufficient capacity to support mission time. **[EVASC.0086]**

Rationale: Battery power indication should be incorporated as part of a power device, not the battery or battery pack itself. If indication cannot be incorporated, the power device should be designed to shut down when the battery reaches a certain low voltage to preclude over discharge

.

3.8.2.3 Auxiliary Controls

Auxiliary controls shall be positioned such that an EVA-gloved hand can activate the control without disturbing the tool/fastener position. **[EVASC.0028]**

Rationale: The intent is to ensure that if an auxiliary control on the device must be operated while holding it, that there is sufficient clearance to not perturb the tool/fastener position.

3.8.3 Common Tools and Fasteners

The Human Landing System shall design EVA hardware that utilizes only common tools and fasteners for planned contingency/maintenance activities as specified in Appendix D. **[EVASC.0088]**

*Rationale: It is understood that exploration missions beyond LEO will be particularly mass and volume limited. There will **not** be the ability to provide a tool kit that consists of over 500 unique tools like on the ISS. For that reason, providers of spacecraft, spacesuits, EVA tools, scientific payloads and other hardware will need to design their hardware to be maintained by a smaller set of common tools. Under this Common Tools umbrella are two parts: the IVA Tools and EVA Tools. There would be an IVA Tool Kit with a limited set of tools to perform maintenance on any hardware inside the habitable volume. This includes maintenance of the spacesuit, EVA Tools or anything else that is stowed or brought into the habitable volume. There would also be a limited set of EVA Tools designated to be used for maintenance on any hardware outside of the habitable volume, such as an external antenna, solar arrays, a rover, or an external science payload.*

*As a goal, Human Landing Systems should design **all** components and assemblies to utilize the Common Tools and Fasteners identified in Appendix D, though it is understood that it will not be practical 100% of the time. However, the intent of this requirement is that all planned maintenance and contingency tasks must be carried out using this Common Tools Kit. Any designs that create the need for an additional tool outside of this set of tools should be routed through the appropriate Program Control Boards for approval.*

3.8.4 Cable Routing/Restraint

The Human Landing System shall design cable routing/restraint for hardware exclusive of using EVA handling and translation aids as those routing paths or restraints. **[EVASC.0089]**

Rationale: EVA handling and translation aids are not to be used as routing or restraints for cabling.

3.8.5 Cable Routing Spacing

The Human Landing System shall design EVA-installed cable routing to include restraints spaced a distance appropriate for the field of gravity. **[EVASC.0090]**

Rationale: Designers are to define areas of activity and route fixed lines and cables so that they are both protected and also do not interfere with these activities. Also, system designers are to focus on non-fixed lines and cables that may be unstowed or moved for a specific task or temporary rearrangement. While the rerouted cable or line may accommodate a specific need, the routing path may interfere with other, non-related activities. Designers are to identify potential uses for lines and cables and ensure the start points, end points, and cable and line routes in between accommodate all crew activities. For ISS, EVA-installed cables are typically secured every two feet (ft).

3.8.6 Paint

The Human Landing System shall design hardware such that it does not require use of paint on EVA worksites and EVA translation paths. **[EVASC.0091]**

Rationale: Paint should be avoided on EVA equipment, on EVA worksites, and near EVA translation paths (often considered the "simple" solution to improve passive thermal properties or provide corrosion control). Paint is difficult to apply properly, difficult to maintain without damage preflight and during processing and may flake off in a vacuum environment after thermal cycles. Additionally, paint is easily damaged by any contact from an EVA crewmember. Damaged paint will change the surface optical properties and can become foreign-object debris which clogs mechanisms and increases Micrometeroid Orbital Debris (MMOD) risk.

3.9 SAFETY

3.9.1 Failure Tolerance

The Human Landing System shall design hardware for failure tolerance. **[EVASC.0142]**

Rationale: Failure tolerance is an essential element of design safety. Failure tolerance level needs to be determined by the Program/Project governing the hardware and includes defining fault tolerance or Design for Minimum Risk (DFMR).

3.9.2 Hazardous Material Control

The Human Landing System shall use failure tolerant containment for the hazard level or program approved vessel for toxic or hazardous chemicals/materials to preclude contaminating an EVA crewmember (hazardous to EVA crewmember or to IVA environment if brought back inside habitable volume). **[EVASC.0092]**

Rationale: Hazardous materials may need to be intentionally present for mission operations. However, to protect the safety of the EVA crewmember during the EVA and of IV crewmembers following EVAs, those materials should be contained in accordance with each program's particular perspective on fault tolerance. This addresses NASA-STD-3001 V2 standard [V2 6048].

3.9.3 Venting of Hazardous Materials

3.9.3.1 Venting or Exposure Compatibility

The Human Landing System shall design hardware to preclude venting or exposure of hazardous materials to an EVA crewmember (hazardous to EVA crewmember or to IVA environment if brought back inside habitable volume). **[EVASC.0093]**

Rationale: Exposure of hazardous materials may impact/damage xEMU suit materials. Examples of IV contaminated environment that can impact the xEMU suit include consumables such as water, oxygen, etc.). Exposure to hazardous material contamination could induce a very serious health condition to an EVA crewmember or IVA crew.

3.9.3.2 Deliberate Venting

The Human Landing System shall design venting operations away from the EVA crewmember and translation path/worksite. **[EVASC.0094]**

Rationale: Hazardous materials may need to be intentionally vented for successful spacecraft operation. However, to protect the safety of crewmembers during and after the EVA, the orientation and operation of those vents should be designed and operated so that crewmembers and translation paths/worksites are not directly impinged upon by hazardous materials during the EVA. Likewise, such venting operations should not deposit hazardous materials on any surface prior to an EVA which the crewmember might intentionally or inadvertently come into contact with.

These steps preclude contact/transference with vented substances and the possibility of bringing such materials inside the habitable volume following EVA activities.

3.9.4 Emitted Radiation

The Human Landing System shall protect the EVA crewmember from Radio Frequency (RF) radiation to the limits specified in NASA-STD-3001 V2 standard [V2 6102]. **[EVASC.0095]**

Rationale: Design requirements are to cover exposure RF radiation for the duration of a mission. Limits are intended to establish exposure conditions for RF and microwave radiation to which it is believed that nearly all workers can be repeatedly exposed without injury. Implementing safing procedures to temporarily inhibit high power electromagnetic wave transmitters from operating during the duration of EVA proximity operations aids in protection of crew from harmful exposure. Hardware designers need to consider the potential impacts of RF radiation to the xEMU suit and overall xEMU suit functions/capability.

3.9.5 Lasers

The Human Landing System shall design lasers to preclude exposing the EVA crewmember to lasers in accordance with the limits specified in NASA-STD-3001 V2 standard [V2 6103]. **[EVASC.0096]**

Rationale: Attenuation of light cannot be assumed from the helmet protection. Design requirements are to cover exposure to both continuous and repetitively pulsed lasers to protect against skin and ocular injury. This requirement applies to lasers used both internal and external to the spacecraft.

3.9.6 Electrical and Safety Design

The Human Landing System shall design equipment to preclude exposure of hazardous electrical potential to the EVA crewmember. **[EVASC.0097]**

Rationale: Electrical hazards could include shock, corona discharge, and high electromagnetic fields. Electrical hazards may not be visibly obvious and so should be controlled by means other than the awareness of EVA crewmembers. Ways to meet this is through inhibits/safing systems when EVA is present and lock out/tag out. For Voltage Potential Discharge reference requirement [EVASC.0123].

3.9.7 Shock Protection

The Human Landing System shall design any exposed conducting surfaces that are accessible to EVA crewmember contact (e.g. translation corridors, work areas, and incidental contact zones) to have a low resistance bond of 0.1 ohm or less to structure to prevent shock hazards. **[EVASC.0098]**

Rationale: Reference NASA-STD-4003A, "Electrical Bonding for NASA Launch Vehicles, Spacecraft, Payloads, and Flight Equipment" for electrical bonding procedures.

3.9.8 Operation During Pressure Change

The Human Landing System shall design or use equipment expected to function during depressurization or repressurization to operate without producing hazards to the EVA crewmember. **[EVASC.0099]**

Rationale: EVA hardware needs to withstand the differential pressure of depressurization, repressurization, and the depressurized condition without resulting in a hazard. Emergency rates of pressurization and depressurization are 0.76 psi/sec (39 mm mercury (Hg)/sec) and -0.3 psi/sec (-16 mm Hg/sec), respectively.

3.9.9 Component Hazardous Energy Provision

The Human Landing System shall preclude exposing the EVA crewmember to the release of hazardous energy. **[EVASC.00100]**

Rationale: Stored energy can exist in mechanical systems and pressurized flex hoses (e.g. tether hoses to prevent hose whip when pressurized). Implementing design features that allow for safing of potential energy along with confirmation that safing is successful aids in ensuring that the hazard is controlled. This addresses NASA-STD-3001 V2 standard [V2 9005].

3.9.10 Detachable Parts

The Human Landing System shall design provisions for securing detachable parts. **[EVASC.0101]**

Rationale: Detachable parts could include safety pins, caps, etc. All detachable parts must be secured to prevent inadvertent release. This is necessary in order to prevent inadvertent interference with mechanisms or unintentional re-contact

with spacecraft elements. Securing detachable parts should not rely on the continuous grasp of an EVA crewmember.

3.9.11 Touch Temperatures

The Human Landing System shall design the hardware to protect the xEMU suit from specified high- and low-touch-temperature extremes as defined in the Touch Temperature Table in the translation corridors, work areas, and incidental contact zones. **[EVASC.0103]**

Rationale: For ISS, the continuous touch temperature requirement is -45°F to +145°F, and incidental touch temperature requirement is -180°F to +235°F. The touch temperature requirement shall be verified using Beginning of Life (BOL) optical property data for cold temperature design, and End of Life (EOL) optical property data for hot temperature design. The requirement can be verified based on the absolute temperature range, or by heat transfer analysis in accordance with the performance of the xEMU suit. These incidental and extended brush limits on the Thermal Micrometeroid Garment (TMG) have been determined by test and analysis (JSC 39198, "Incidental Contact Temperature Test of Extravehicular Mobility Unit (EMU) Softgoods Material Lay-Up," AML-01-02-R1, and JSC 39117, "Extravehicular Mobility Unit (EMU) Internal Space Station (ISS) Extravehicular Activity (EVA) Thermal Environmental Requirements for Certification"). In rare cases, EVA operations and/or hardware design require long-duration compression of the TMG orthofabric, thereby thermally shorting the multilayer insulation and making TMG layers vulnerable to thermal damage. Examples of these are tools with gauntlets or grips that extend around the backside of the glove, or hardware in or containing confined space that requires any portion of the EMU to be compressed during EVA operations. These extended EMU TMG contact limits have been determined by analysis (JSC 39117).

TABLE 3.9.11-1 TOUCH TEMPERATURES

Temperature Range (°F) (°C)	Type of Contact
-45°F to +145°F (-43°C to 63°C)	Continuous touch
-180°F to +235°F (-118°C to 143°C)	Incidental contact
-244°F to 320°F (-153°C to 160°C)	Incidental brush & bump*
-195°F to 240°F (-126°C to 116°C)	Extended compression of TMG for anything longer than a brush or bump*

Temperature Range (°F) (°C)	Type of Contact
-187°F to 206°F (-121°C to 97°C)	Extended compression of TMG for back of glove for anything longer than a brush or bump*

*****NOTE: Brush or bump is defined as 3 seconds for bump at 1 psi or 30 seconds for brush at 0.1 psi. These may be invoked if or when the first order thermal analysis for items EVA contacts does not meet the values for continuous touch and incidental contact.

3.9.12 xEMU Glove Palm External Touch-Temperature Compliance

The Human Landing System shall design hardware that complies with the 30-minute xEMU glove palm touch temperature limits for crewmember protection from high and low skin touch temperatures as defined in Table 30-Minute Touch Temperature Compliance For Small, Handheld Hardware and Table 30-Minute Touch Temperature Heat Rate Compliance. **[EVASC.0011]**

Rationale: These limits do not apply to the backside of the glove which is made from different material that meet other standards. A 30-minute touch-temperature compliance provides a sufficient degree of operational flexibility from a safety perspective. If hardware cannot comply with the 30-minute requirement, the Human Landing System shall perform a hazard analysis to evaluate justification and operational impacts. EVA hardware that causes glove or xEMU suit compression during nominal operation shall also be evaluated via a hazard/safety analysis.

With glove heaters EVA hardware maintained between -80ºF to +150ºF (-63ºC to +65ºC) requires no touch-temperature analysis. Without glove heaters EVA hardware maintained between -20ºF to +150ºF (-29ºC to +65ºC) requires no touch temperature analysis. These limits provide a minimum of 30 minutes continuous glove palm contact at a pressure of 1.0 pounds per square inch. Alternately, the 30-Minute Touch Temperature Compliance for Small, Handheld Hardware Table can be used to demonstrate 30-minute touch-temperature compliance of hardware, subject to the following limitations: small, handheld hardware with no more than 50 square inch surface area, and materials predominantly aluminum, stainless steel, titanium, and/or soft goods.

Hot touch-temperature limits can be extended significantly if a shorter contact time is justifiable. For example, temperatures of 170 ºF (77 ºC) for up to 10 minutes and 210 ºF (99 ºC) for up to 5 minutes may be acceptable with no hardware mass or surface area limitations. (The EMU glove performance is documented elsewhere, JSC 39117, "Extravehicular Mobility Unit (EMU) International Space Station (ISS) Extravehicular Activity (EVA) Thermal Environment Requirements for

Certification", and can be used for this purpose when applicable.) For successive contact durations, glove and skin temperatures may require thermal recovery before the next contact. The Human Landing System shall document rationale for an exception allowing touch-temperature durations less than 30 minutes in safety documentation.

For hardware having temperatures outside the 30-minute limits specified, the Human Landing System can use an analytical rule based on the heat transfer rate through the glove palm contact area, according to the 30-Minute Touch Temperature Heat Rate Compliance Table. The heat transfer rate analysis accounts for the transient temperature response of the hardware during contact. If the hardware surface area exceeds 43 square inches (grasp area of glove), then area not covered by contact is exposed to the thermal radiation environment during the contact interval. Touch-temperature compliance is achieved if the average heat rate does not exceed the maximum values outlined in the table.

TABLE 3.9.12-1 30-MINUTE TOUCH TEMPERATURE COMPLIANCE FOR SMALL, HANDHELD HARDWARE

Hardware Mass (lbm.)	Allowable Touch-Temperature Range (deg F)
0.0 to 0.2	-200 to +250
>0.2 to 0.23	-200 to +240
>0.23 to 0.25	-200 to +230
>0.25 to 0.28	-200 to +220
>0.28 to 0.3	-200 to +210
>0.3 to 0.35	-200 to +200
>0.35 to 0.4	-200 to +190
>0.4 to 0.6	-180 to +180
>0.6 to 0.8	-150 to +175
>0.8 to 1.2	-130 to +170
>1.2 to 2.0	-115 to +165
>2.0 to 4.0	-95 to +160
>4.0	-80 to +150

DRAFT

TABLE 3.9.12-2 30-MINUTE TOUCH TEMPERATURE HEAT RATE COMPLIANCE

Object Temperature (deg F) *Before Contact*	Continuous Contact Duration (minutes)	Contact Boundary Temperature (deg F)	Contact Conductance (BTU/hour square inch-deg F)	Maximum Average Heat Rate (1,2) (BTU/hour-square inch)
greater than 150	30	101	0.0033	0.205
Less than -80	30	75.0	0.0033	-0.583

* British Thermal Unit (BTU)

Notes:

(1) Positive denotes heat out of the object

(2) Averaged over 30 minutes of simulated contact

3.9.13 Incidental and Continuous Contact Heat Transfer Rates

The Human Landing System shall limit heat transfer rates for incidental and continuous contact to the values defined in the Heat Transfer Rates Table. **[EVASC.0104]**

Rationale: Limiting heat transfer is an alternative method to maintaining the touch temperature values for incidental and continuous contact as defined in the Touch Temperature Table. Designated EVA interfaces such as EVA Tools. Translation aids, restraints, translation paths, stowage, worksites, ORU handling, and surfaces identified for operating are subject to limitation in accordance with these heat transfer values. These values are based on the heritage ISS EMU suit.

TABLE 3.9.13-1 HEAT TRANSFER RATES

Object Temperature	Contact Duration (minutes)	Boundary Node Temperature (degrees F)	Linear Conductor (BTU/hr degrees F)	Maximum Average Heat Rate [1] (BTU/hr)
Hot Object	Unlimited	113	1.149	42.52 [2]
	Incidental (0.5 max)	113	1.444	176.2 [3]
Cold Object	Unlimited	40	1.062	-132.7 [2]
	Incidental (0.5 max)	40	1.478	-325.2 [3]

Notes:

[1] Positive denotes heat out of the object, negative denoted heat into the object.

[2] Averaged over 30 minutes of simulated contact (excursions up to 1.5 times this rate for 3 minute intervals are allowable.

[3] Averaged over 2 minutes of simulated contact (excursions up to 2.5 times this rate for 12 second intervals are allowable

3.9.14 Sharp Edge Protection

The Human Landing System shall protect the EVA crewmember from sharp edges on all hardware located within 24 inches of a translation path, within a worksite envelope, and on each equipment item needing an EVA interface as defined in the Sharp Edge Criteria Table, Exposed Corner and Edges Figure, and Snag and Sharp Edges Hazards Table. **[EVASC.0105]**

Rationale: Sharp edges could damage the softgoods of the xEMU suit and potentially create a catastrophic hazard due to pressure loss. A swatch test can also be used to evaluate potential sharp edges. Only trained personnel can perform a swatch test per the procedure documented in the EVA Office Memo XA-08-015. If the hardware passes the swatch test in its final configuration, the hardware shall be considered acceptable for flight. This addresses NASA-STD-3001 V2 standard [V2 9009].

.

TABLE 3.9.14-1 SHARP EDGE CRITERIA

	Radius				Remarks	Figure
Application	Outer in.	Outer mm	Inner in.	Inner mm		II.2-5 Referenced
(a) Openings, panels, covers (corner radii in plane of panel)	0.25 0.12	6.4 3.0	0.12 0.06	3.0 1.5	Preferred Minimum	
(b) Exposed corners:	0.5	13	–	–	Minimum	(a)
(c) Exposed edges: (1) 0.08 in. (2.0 mm) thick or greater	0.04	1.0	–	–		(b)
(2) 0.02 to 0.08 in. (0.5-2.0 mm) thick	Full Radius		–	–		(c)
(3) less than 0.02 in. (0.5 mm) thick	Rolled or Curled					(d)
(d) Flanges, latches, controls, hinges, and other small hardware operated by the pressurized-gloved hand	0.04	1.0	–	–	Minimum required to prevent glove snagging	–
(e) Small protrusions (less than approximately 3/16 in. (4.8 mm)) on toggle switches, circuit breakers, connectors, latches, and other manipulative devices	0.04	1.0	–	–	Absolute minimum unless protruding corner is greater than 120°	
(f) For materials less than 0.08 in. (2.032 mm) thick that are used in a location accessible to EVA, edge radii shall be greater than 0.003 in. (0.0672 mm) and exposed edges shall be uniformly spaced, not to exceed 0.5 inch (1.27 cm) gaps					Flush at the exposed surface plane and shielded from direct EVA interaction	

Edge and In-Plane Corner Radii - A 45° chamfer by 0.06 in. (1.5 mm) (minimum) with smooth broken edges is also acceptable in place of a corner radius. The width of chamfer should be selected to approximate the radius corner described above.

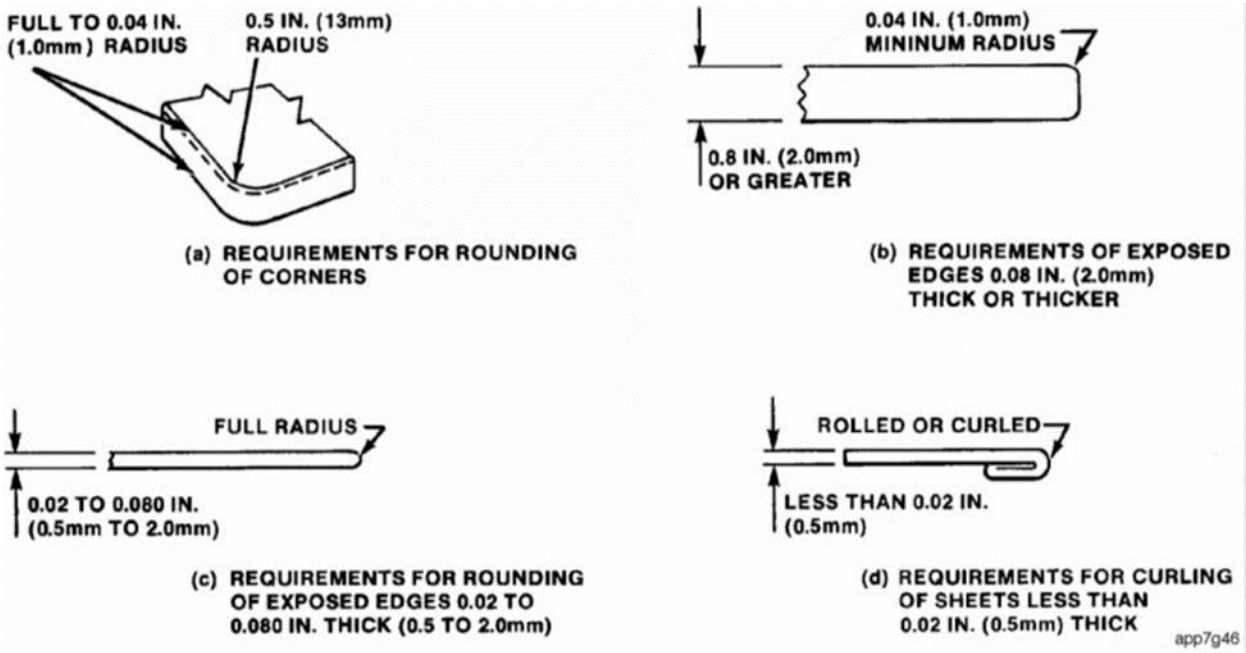

FIGURE 3.9.14 EXPOSED CORNER AND EDGES

TABLE 3.9.14-2 SNAG AND SHARP EDGE HAZARDS

APPLICATION	CRITERIA/REMARKS
Latching devices	Cover or design all latching devices to preclude gaps or overhangs that can catch fabrics or pressure xEMU suit appendages. All surfaces and edges must be smooth, rounded, and free of burrs (reference requirement [EVASC.0108]).
Lap joints in sheet metal and mismatching of adjacent surfaces	All surfaces must be mated within 0.03 in (0.8 mm) of flat surface at edges, or must be butted or recessed. All exposed edges must be smooth and radiused 0.06in. (1.5 mm) minimum, chamfered 45 degrees, or must be covered with an appropriate material to protect EVA gloves.
Safety wire (lock wire) and cotter pins	Ensure that no safety wire is used on external surfaces. Reference requirement [EVASC.0069] for prohibited locking fasteners.
Sheet metal structure, box and cabinet three-plane intersecting corners	Use spherical welded or formed radii unless corners are protected with covers.

APPLICATION	CRITERIA/REMARKS
Screw heads, bolts, nuts, and nut plates, excess threads and rivets that can be contacted by crewmember (reference requirement [EVASC.0106]	Design all screw heads and bolt heads to face the outside of the structure, if possible. Where nuts, nut plates, and threads are exposed, cover the nuts, nut plates, and threads in a secure manner that does not preclude removal of the fastener. Recessed heads or the use of recessed washers is recommended. Overall height of heads shall be within 0.125 in. (3.2 mm) or covered unless more than 7 head diameters apart from center to center. Height of roundhead or oval head screws is not limited. Screw heads or bolt heads more than 0.25-in. (6.4-mm) deep must be recessed or be covered with a fairing, except those intended to be EVA crew interfaces.
	Design rivet heads to face out on all areas accessible to crewmembers and to protrude no more than 0.06 in. (1.5 mm) unless spaced more than 3.5 head diameters from center to center. In all exposed areas where unset ends of rivets extend more than 0.12 in. (3.1 mm), or 0.50 in. (12.7 mm) of unset and diameter if more than 0.12 in. (3.1 mm), install a fairing over them. This applies to explosive, blind, or pull rivets, etc. Unset ends of rivets must have edges chamfered 45° or ground off to a minimum radius of 0.06 in. (1.5 mm).
	Allow a maximum gap of 0.02 in. (0.5 mm) only between one side of a fastener head and its mating surface.
	Prevent or eliminate burrs (reference requirement [EVASC.0108]). Use of Allen heads is preferred. For torque-set, slotted, or Phillips head screws, cover with tape or other protective materials or individually deburr before flight.

3.9.15 Screws and Bolts

The Human Landing System shall include protective features on screws or bolts in established worksites (planned and contingency) and translation routes to prevent snagging, and to protect against sharp edges. **[EVASC.0106]**

Rationale: Sharp edges and potential snag hazards pose a threat to EVA crewmembers translating along a vehicle.

3.9.16 Levers, Cranks, Hooks, and Controls

The Human Landing System shall locate levers, cranks, hooks, and controls where they cannot pinch, snag, cut, abrade, or provide kickback to the EVA crewmember appendages or equipment (like tethers). **[EVASC.0107]**

3.9.17 Burrs

The Human Landing System shall ensure that exposed surfaces are smooth and free of burrs. **[EVASC.0108]**

Rationale: Burrs are manufacturing artifacts or can occur during a mission as a result of maintenance or assembly operations. Burrs cause damage to equipment and skin. They are to be removed as a part of the manufacturing process, or if it is likely that they will be created during a mission, a means is to be provided to eliminate crew exposure to the burrs. This addresses NASA-STD-3001 V2 standard [V2 9012].

3.9.18 Exposed Holes or Slots

The Human Landing System shall ensure that exposed holes that are round or slotted, within the range of 0.5 in. (12.7 mm) to 1.4 in. (35.56 mm) in diameter are covered to preclude entrapment of a xEMU-gloved finger. **[EVASC.0109]**

Rationale: Holes with diameter in the range of 0.5 in. to 1.4 in. could entrap the crewmember's finger. If there are holes within this range, they are assumed to be covered as they fall outside the range of acceptable exposed holes. EVA crewmembers are trained to recognize tether points, so although they are specified to be in the entrapment range, they are exempt from this requirement. This requirement should also be applied to loose equipment and to holes, even if the back side is accessible, because the hazard is not only that the crew will entrap the finger, but that damage may occur to the finger in the effort to remove it from the entrapped condition.

3.9.19 Pinch Hazard Protection

The Human Landing System shall protect the EVA crewmember from pinch hazards. **[EVASC.0110]**

Rationale: This applies to any hardware that moves (pivots, retracts, flexes), changes configuration that has the potential to pinch any appendage, including legs or other body parts, or has a configuration such that a gap in the range of 0.5 in. (12.7 mm)to 1.4 in. (35.56 mm) (glove pinching), exists between the equipment and adjacent structure (reference requirement [EVASC.0109]. This addresses NASA-STD-3001 V2 standard [V2 9013].

DRAFT

3.9.20 Entrapment Hazard

The Human Landing System shall design hardware and corresponding worksite to preclude snagging, pinching, or trapping an EVA crewmember or a limb/tether such that the EVA crew could not be removed. **[EVASC.0111]**

Rationale: This requirements applies to hardware in translation paths and worksites. It assumes that hardware (e.g. all latches, fasteners, etc.) should be designed to preclude entrapment of the equipment or crewmember. Worksites for equipment removal/replacement tasks must prevent crewmember entrapment hazard.

3.9.21 Protection from Moving or Rotating Equipment

The Human Landing System shall protect EVA crewmembers from impacts from moving, rotating equipment, or inadvertent deployment, separation or jettison of hardware. **[EVASC.0112]**

Rationale: Moving or rotating equipment can present a hazard to the EVA crewmember. Equipment that gets separated can present a contact hazard for the EVA crewmember and for the spacecraft. The vehicle needs to include design features to protect EVA crewmembers from hazards due to movable or rotating equipment that could come into contact with an EVA crewmember snagging or cutting the xEMU suit or umbilical, resulting in catastrophic leak or injury to the EVA crewmember. These design features could include the use of a two-fault tolerant design, use of physical barriers, use of two inhibits to prevent accidental actuation of these types of hardware, or a combination of these design features. Components that contain stored energy (springs, pyro activated devices, pressure vessels, etc.) could constitute a hazard to an EVA crewmember if not properly controlled.

3.9.22 Emergency Ingress Capability

The Human Landing System for a space vehicle/element shall design EVA translation paths and aids, including labels to indicate the shortest paths to a safe haven, so that an EVA crewmember can complete an emergency ingress within 30 minutes **<TBR-HLS-EVA-003>**, starting from the translation path or EVA worksite and ending when the vehicle cabin has repressurized. **[EVASC.0113]**

Rationale: Safe haven is defined as the EVA crewmember being attached to cooling and repress has started if in an airlock. An ingress time of 30-minutes allows for margin with regards to the xEMU ingress time of 60 minutes, which is based on the secondary oxygen design.

3.9.23 Connector Cleanliness Level

The hardware that interfaces with the xEVA System connectors shall meet a Visibly Clean-Sensitive (VC-S) cleanliness level as identified by JPR 5322.1, “Contamination Control Requirements Manual”, or higher. **[EVASC.0114]**

Rationale: This is intended for any hardware that interfaces with EVA be verified at launch (may include launch vehicle integration). However, for contamination control due to outgassing for activities after launch, it is assumed that contamination sources will be controlled by higher-level Program mechanisms and EVA is not considered to be a driver. This requirement covers hardware that comes in contact with the connectors on the xEMU suit. Flow paths pertaining to interfacing with the xEMU suit’s fluid and gas systems will need specific consideration as to what cleanliness level is applicable.

3.9.24 External Surface Cleanliness Level

The hardware that interfaces with external surfaces of xEVA System hardware shall meet a Visibly Clean-Sensitive (VC-S) level upon delivery as identified by JPR 5322.1, “Contamination Control Requirements Manual”, or higher. **[EVASC.0140]**

Rationale: This is intended for any hardware that interfaces with EVA. At the completion of Pre-Delivery Acceptance/Pre-Installation Acceptance (PDA/PIA), hardware is expected to be verified as VC-S or higher and that cleanliness level maintained through the receive-in process at NASA or NASA’s Cargo Integrator controlled storage. It is assumed that contamination sources in flight will be controlled by higher-level Program mechanisms. In general, xEVA System hardware delivered for launch as VC-S is not expected to be maintained to VC-S once launched unless specific documentation such as Hazard Controls, Flight Rules and Operational Control Agreement Database (OCADs) specifically request such precautions.

3.9.25 Tethering / Restraint

Hardware items shall provide at least one means of positive restraint independent of EVA grasp. **[EVASC.0115]**

Rationale: Grasping is not considered an acceptable form of positive restraint for a translating EVA crewmember, so tethers and tether points are required on hardware with handholds. This requirement applies for microgravity EVA operations. Surface EVAs may not necessarily require the use of tethers for translation.

3.9.26 Crew Safety Tether Attachment

Handholds/handrails on translation paths intended for crewmember restraint shall incorporate a safety tether attachment point into its support structure to withstand the specified EVA crewmember safety tether loads. **[EVASC.0116]**

Rationale: Reference Microgravity EVA-Induced Loads Table in requirement [EVASC.0050] for safety tether loads.

3.9.27 Handhold/Handrail Color

Handholds/handrails that are intended to be used as a safety tether attachment point shall be anodized with gold anodic film per MIL-A-8625, Anodic Coatings for Aluminum and Aluminum Alloys, Type II, Class 2. **[EVASC.0117]**

Rationale: The EVA crewmember needs to be able to readily identify handholds/handrails that are capable of withstanding the safety tether loads. Human rated handrails/handholds are defined as those that meet torsional loading, microgravity EVA-induced loads, and sharp edges. Yellow and gold are used to differentiate crew safety tether certified handrails/handholds from those that do not meet loads requirements.

3.9.28 Manual Overrides

For remotely commanded mechanisms that require EVA as a backup, the Human Landing System shall include a manual override mechanism with appropriate access for EVA operation. **[EVASC.0118]**

Rationale: The intent is to ensure that the hardware design for the remotely commanded mechanism (e.g. robotic work platform) provides access to an EVA override or equivalent drive out/back drive feature. This is similar to the tasks associated with release of a potentially stuck robotic arm end effector.

3.9.29 Hardware Removed/Replaced by EVA

The Human Landing System shall design hardware that can be removed/replaced via EVA. **[EVASC.0120]**

DRAFT

3.9.30 Entanglement, Cable Clamps, Ducts, or Retractors

Cables, conductors, bundles and hoses within an EVA worksite or translation path shall be secured by means of clamps unless they are contained in a cable management system (wiring ducts or cable retractors). **[EVASC.0137]**

Rationale: Intent is to ensure that the connector worksites and translation paths are free from obstructions.

3.10 ENVIRONMENTS

3.10.1 Magnetic Field Limit

The Human Landing System shall not generate static or time varying magnetic fields in excess of 250 gauss in crew translation corridors, work areas, and incidental contact zones during EVA operations external to the ISS pressurized volume. **[EVASC.0121]**

Rationale: The value of 250 gauss was commensurate with exposure to the Alpha Magnetic Spectrometer (AMS). The original intent of this requirement was to prevent magnetic interference with the xEMU suit and xEVA tools when working close to the AMS. Magnetic field strengths inside the ISS pressurized volumes are far lower and would pose no threat to any portion of the xEMU suit, given it can meet the 250 gauss limit.

3.10.2 Hardware Compatibility with xEMU Suit EMI

The Human Landing System shall control radiated and conducted emissions to be compatible with xEMU Suit Electromagnetic Interference (EMI) susceptibility limits as defined in the Maximum Recommended EMI Exposure Level Figure. **[EVASC.0122]**

Rationale: Vehicle/payload generated EMI can present a hazard to the EVA crewmember and life support system. Unintentional vehicle/payload interference could cause a catastrophic hazard. Values are based on the heritage ISS EMU suit.

DRAFT

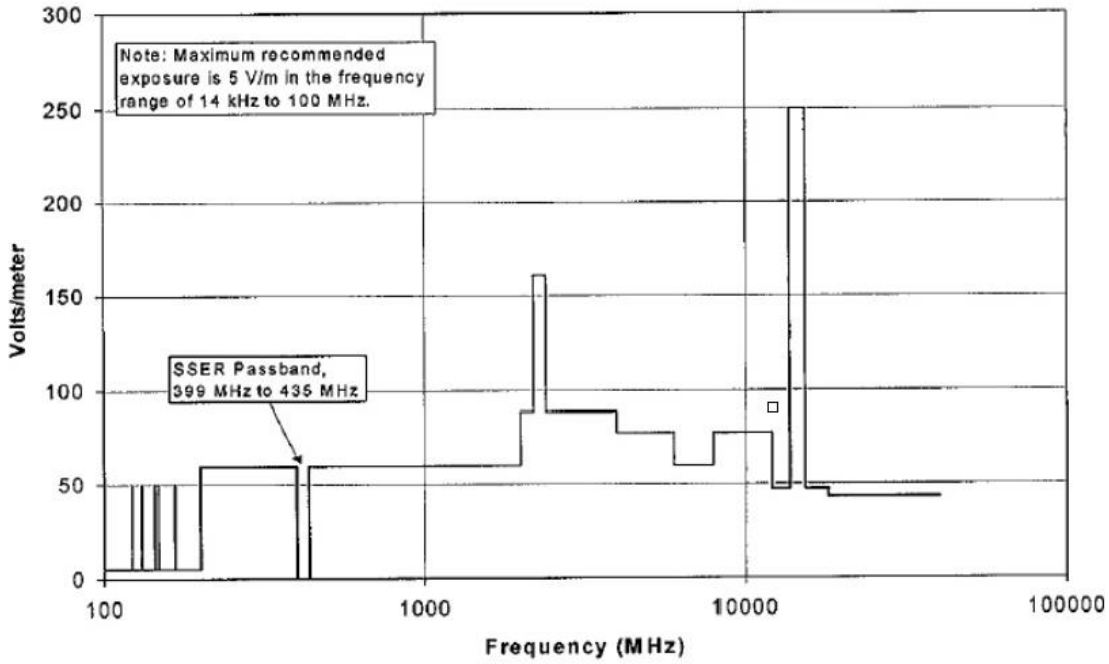

FIGURE 3.10.2-1 MAXIMUM RECOMMENDED EMI EXPOSURE LEVEL

3.10.3 Voltage Potential Discharge

The Human Landing System shall comply with spacecraft charging requirements in MIL-STD-461 and MIL-STD-464 so as to prevent differential discharges to an EVA suited crewmember at voltages above 40V. **[EVASC.0123]**

Rationale: Electrical arcing between vehicles at different potentials is a possible hazard. The hazard can manifest during proximity or docking/berthing operations as well as EVA operations. This requirement is based on heritage ISS EMU suit limits.

4.0 VERIFICATION

This section contains the EVA compatibility matrixed requirements that are necessary to show compliance with each “shall” statement in Section 3.0 of this document. Non “shall” statements are not required to be checked for compliance.

4.1 VERIFICATION METHODS

Verification may be accomplished by inspection, analysis, demonstration, test, or any combination. The methods used to accomplish the verification are defined below.

4.1.1 Inspection

A method of verification of physical characteristics determines compliance of the item with requirements without the use of special laboratory equipment, procedures, test support items, or services. Inspection uses standard methods such as visuals, gauges, etc., to verify compliance with requirements. Hardware may be inspected for the following:

1. Construction
2. Workmanship
3. Physical condition
4. Specification and/or drawing compliance

Inspection may be used to confirm that engineering drawings call out proper design and construction features (i.e., materials and processes). Inspection includes Review of Design (ROD). This is typically a review of the as-built drawings to confirm that a design feature has been incorporated into the design. Inspection also may be used to determine closure status of verification activities being performed at Level 3 to support closures at Level 2 when the data is not analyzed at Level 2, but just checked off for closure status.

4.1.2 Analysis

A method of verification utilizing techniques and tools such as computer and hardware simulations, analog modeling, similarity assessments, and validation of records to confirm that design requirements to be verified has been satisfied. Analysis is the evaluation of the results of multiple tests and analyses at a lower level as it would apply to a higher level of assembly. Analytical methods selected for verification will be supported by appropriate rationale and be detailed in the applicable documents.

Analysis may be used whenever any of the following apply:

a. The spectrum of flight conditions cannot be simulated adequately on the ground and it is necessary to extrapolate test data beyond the performed test points

b. It is not cost effective to test

c. It is desired to determine closure status of verification activities being performed at lower levels of assembly to support closures at higher levels

Most analyses will be accomplished in the development and qualification phases of verification. Similarity is a form of analysis that is acceptable for qualification (where it is shown that the article is similar in design, manufacture, manufacturing process, and quality control to another article that has been previously qualified to equivalent or more stringent criteria).

4.1.3 Demonstration

Verification by demonstration is used for determination of properties of an end item of component by observation of its operation or characteristics. It is a qualitative exhibition of functional performance (i.e., serviceability, accessibility, transportability and human engineering features) usually accomplished with no or minimal instrumentation.

4.1.4 Test

A method of verification wherein requirements are verified by measurement during or after the controlled application of functional and environmental stimuli. These measurements may require the use of laboratory equipment, recorded data, procedures, test support items, or services. For all verification, qualification, and acceptance test activities, pass or fail test criteria or acceptance tolerance bands (based upon design and performance requirements) shall be specified prior to conducting the test. This will ensure that the actual performance of tested equipment or systems meets or exceeds specifications. Acceptance tolerance bands used at the manufacturer's facility for component or subsystem level test will be based on operational tolerance bands.

4.2 VERIFICATION CROSS MATRIX

The following matrix identifies all requirements outlined in this document and identifies the expected verification method. For those requirements that indicate multiple methods, the Human Landing System needs to assess each, but not necessarily perform all for verification closure.

TABLE 4.2-1 VERIFICATION CROSS MATRIX

Requirement Number	Requirement Name	Method				Notes
		I	A	D	T	
[EVASC.0001]	Translation Path Hardware Protrusion		X	X		Demonstration could include NBL evaluation and performed to satisfy translation, work volume, worksites, etc.

Requirement Number	Requirement Name	Method				Notes
		I	A	D	T	
[EVASC.0002]	Tool Interface Clearance	X	X			
[EVASC.0007]	Bolt Clearance	X				
[EVASC.0003]	Gloved-Hand Clearance		X			
[EVASC.0004]	Handrail/Handhold Mounting Clearance	X				
[EVASC.0005]	Handrail/Handhold Side Clearance	X				
[EVASC.0006]	APFR EVA Installation/Removal Clearance (when Docked in lunar orbit)	X				
[EVASC.0152]	Continuous EVA Translation Path (when Docked in lunar orbit)		X	X		Demonstration could include NBL evaluation and performed to satisfy translation, work volume, worksites, etc.
[EVASC.0008]	Translation Path		X	X		Demonstration could include NBL evaluation and performed to satisfy translation, work volume, worksites, etc.
[EVASC.0154]	Incapacitated Crewmember Interfaces	X		X		
[EVASC.0010]	EVA Contact Hazards Preclusion Beyond Translation Corridor	X	X			
[EVASC.0012]	EVA Handling Features	X				
[EVASC.0013]	Unpressurized Hatch Transfer Constraint (when Docked in lunar orbit)	X				
[EVASC.0135]	EVA Pressurized Suit Transfer Hatch	X				
[EVASC.0153]	EVA Lunar Hatch Dimensions	X		X		Demonstration could include NBL evaluation and performed to satisfy translation, work volume, worksites, etc.
[EVASC.0136]	EVA Secondary Ingress Method	X				

DRAFT

Requirement Number	Requirement Name	Method				Notes
		I	A	D	T	
[EVASC.0014]	Mounting Alignment Devices	X		X		
[EVASC.0015]	Handling Alignment Marks	X				
[EVASC.0016]	Locking Device				X	
[EVASC.0124]	Over Center Device Force				X	
[EVASC.0017]	Soft Dock or Soft Capture Mechanisms	X		X		
[EVASC.0125]	Soft Capture	X	X	X		
[EVASC.0126]	Soft Dock Force				X	
[EVASC.0021]	EVA Gloved Hand Compatibility		X	X		
[EVASC.0023]	Grip Surface	X				
[EVASC.0024]	Unique Labeling	X				
[EVASC.0025]	Hand Tool Operations			X		
[EVASC.0135a]	Hand Ratcheting	X		X		
[EVASC.0026]	Throw Angle		X	X		
[EVASC.0127]	Ratchet Mechanism		X	X		
[EVASC.0128]	Back Drive Torque		X		X	
[EVASC.0129]	Running Torque		X		X	
[EVASC.0027]	Pressurized Glove Compatibility			X		
[EVASC.0087]	Inadvertent Actuation of EVA -Actuated Controls	X				
[EVASC.0029]	Handrail/Handhold Cross-Section	X				
[EVASC.0030]	Handrail/Handhold Length	X				
[EVASC.0031]	Handrail/Handhold Accessibility	X	X	X		
[EVASC.0032]	Handrail/Handhold Spacing	X				
[EVSC.0144]	EVA Egress Handrail Spacing	X				
[EVASC.0035]	Optimum Work Envelope – Microgravity (when Docked in lunar orbit)		X			
[EVASC.0036]	Crew Aids for Stability		X			
[EVASC.0037]	EVA Worksites Using Robotic Work Platform (when Docked in lunar orbit)		X			
[EVASC.0038]	Lubricant Use	X				

DRAFT

Requirement Number	Requirement Name	Method				Notes
		I	A	D	T	
[EVASC.0039]	Commonly Implemented EVA Interfaces	X				
[EVASC.0040]	Worksite Mobility		X	X		
[EVASC.0041]	Worksite Field of View		X	X		
[EVASC.0042]	EVA Entrapment	X		X		
[EVASC.0044]	Worksite Restraints	X				
[EVASC.0148]	Dedicated EVA Worksite		X			
[EVASC.0149	Robotic Assisted EVA Worksite		X			
[EVASC.0150]	Free-Float Worksites		X			
[EVASC.0045]	Installation of Passive WIF Sockets	X				
[EVASC.0046]	Foot Restraint Ingress/Egress Aids		X			
[EVASC.0047]	Visual Contrast at Worksite		X			
[EVASC.0033]	Equipment Tether Attachment EVA Handle	X				
[EVASC.0048]	EVA Equipment Tether Points	X	X		X	
[EVASC.0049]	Tether Point Loads	X	X		X	
{EVASC.0134]	Soft Goods Tether Point Loads	X	X		X	
[EVASC.0050]	Microgravity EVA Crew-Induced Loads		X			
[EVASC.0155]	Partial Gravity EVA Crew Induced Loads		X			
[EVASC.0018]	EVA Actuated Loads		X		X	All lines within the Miscellaneous On-Orbit Crew-Induced Load Table under Crew System are Analysis and Test. The only exception is the line entitled EVA Mechanical Control Feedback, this is to be done by Test
[EVASC.0051]	Handhold/Handrail Torsional Loading		X			

DRAFT

Requirement Number	Requirement Name	Method				Notes
		I	A	D	T	
[EVASC.0143]	WIF Structural Loading		X			
[EVASC.0053]	One-Handed EVA Operable Connectors			X		
[EVASC.0054]	Connector Accessibility	X		X		Connector Accessibility should be confirmed by a 1 time demonstration with class I hardware in its final configuration. If it is a subassembly that can/will get used when integrated with other hardware, accessibility should be confirmed before and after integration at least once.
[EVASC.0138]	Gloved-Hand Connector Accessibility	X		X		Should perform demonstration with [EVASC.0054]
[EVASC.0130]	Connector Spacing	X		X		Any connectors spacing design not meeting gloved hand access requirements in every direction should be demonstrated to be acceptable with pressurized EVA gloves.
[EVASC.0055]	Incorrect Connector Mating Prevention	X		X		
[EVASC.0056]	Connector Coding	X				
[EVASC.0057]	Connector Protective Caps	X				
[EVASC.0058]	Connector Rotational Travel	X		X		
[EVASC.0059]	Connector Locking Feature	X		X		
[EVASC.0060]	Visible Connector Alignment Markings	X				
[EVASC.0061]	Connector Locking Ring	X		X		Demonstration should include Electrical,

DRAFT

Requirement Number	Requirement Name	Method				Notes
		I	A	D	T	
						Electronic, and Electromechanical (EEE) expert to verify
[EVASC.0062]	Connector Mating Status	X				
[EVASC.0064]	Connector Ultimate Load	X	X			
[EVASC.0052]	Mating/Demating of Powered Connectors		X		X	
[EVASC.0065]	Connectors - Electrical Bonding	X			X	
[EVASC.0066]	Scoop-Proof Electrical Connector Design	X		X		Demonstration should include EEE expert to verify
[EVASC.0063]	Connector Grip Point	X				
[EVASC.0139]	Connector Disconnection	X		X		
[EVASC.0131]	Arc Containment	X	X			Analysis should include EEE expert to verify
[EVASC.0132]	Tethering	X			X	
[EVASC.0133]	Venting Feature	X			X	
[EVASC.0145	Indication of Pressure Flow – Nonbrazed or Nonwelded	X	X	X		
[EVASC.0146]	Indication of Pressure Flow – Quick Disconnect	X				
[EVASC.0068]	Captive Fastener Design	X				
[EVASC.0069]	Prohibited Locking Methods for Fasteners	X				
[EVASC.0147]	Securing of Threaded Fasteners	X				
[EVASC.0067]	One-Handed Fastener Operation		X			
[EVASC.0071]	Push and Turn Fasteners				X	
[EVASC.0072]	Scalloped Knobs	X				
[EVASC.0073]	Knobs Head Diameter and Height	X				
[EVASC.0074]	EVA Hand-Actuated Fasteners Contingency Operation	X				
[EVASC.0075]	EVA PIP Pin Grasping Interface	X				
[EVASC.0076]	PIP Pin Restraint Tether	X				
[EVASC.0077]	Pin Drive-Out Feature	X				

DRAFT

Requirement Number	Requirement Name	Method				Notes
		I	A	D	T	
[EVASC.0078]	Driver-Type Push Force Tools	X			X	
[EVASC.0079]	EVA Fastener Head	X				
[EVASC.0151]	Fastener Torque Data					Considered to be a data deliverable
[EVASC.0080]	Power and Hand Tool Operability	X		X		
[EVASC.141]	Fastener Gauge/Measurement	X			X	
[EVASC.0082]	Fastener Torque Measurement	X			X	
[EVASC.0083]	Fastener Alignment Features	X				
[EVASC.0084]	Fastener Drive Height	X				
[EVASC.0085]	Battery Replacement	X		X		
[EVASC.0086]	Battery Capacity/Voltage Monitoring	X			X	
[EVASC.0028]	Auxiliary Controls	X		X		
[EVASC.0088]	Common Tools and Fasteners	X				
[EVASC.0089]	Cable Routing/Restraint	X				
[EVASC.0090]	Cable Routing Spacing	X				
[EVASC.0091]	Paint	X				
[EVASC.0142]	Failure Tolerance		X			
[EVASC.0092]	Hazardous Material Control		X			
[EVASC.0093]	Venting or Exposure Preclusion		X			
[EVASC.0094]	Deliberate Venting		X			
[EVASC.0095]	Emitted Radiation		X			
[EVASC.0096]	Lasers		X			
[EVASC.0097]	Electrical and Safety Design		X		X	
[EVASC.0098]	Shock Protection		X		X	
[EVASC.0099]	Operation During Pressure Change		X		X	
[EVASC.0100]	Component Hazardous Energy Provision		X			
[EVASC.0101]	Pins or Detachable Parts	X				
[EVASC.0103]	Touch Temperatures		X			

DRAFT

Requirement Number	Requirement Name	Method				Notes
		I	A	D	T	
[EVASC.0011]	xEMU Glove Palm External Touch-Temperature Compliance		X			
[EVASC.0104]	Incidental and Continuous Touch Heat Transfer Rates		X			
[EVASC.0105]	Sharp Edge Protection	X			X	
[EVASC.0106]	Screws and Bolts	X				
[EVASC.0107]	Levers, Cranks, Hooks, and Controls	X	X			
[EVASC.0108]	Burrs	X				
[EVASC.0109]	Exposed Holes or Slots	X				
[EVASC.0110]	Pinch Hazard Protection	X		X		
[EVASC.0111]	Entrapment Hazard	X		X		
[EVASC.0112]	Protection from Moving or Rotating Equipment		X			
[EVASC.0113]	Emergency Ingress Capability		X	X		
[EVASC.0114]	External Surface Cleanliness Level	X				
[EVASC.0115]	Tethering / Restraint	X				
[EVASC.0116]	Crew Safety Tether Attachment	X				
[EVASC.0117]	Handhold/Handrail Color	X				
[EVASC.0118]	Manual Overrides	X				
[EVASC.0120]	Hardware Removed/Replaced by EVA	X	X	X		
[EVASC.0137]	Entanglement, Cable Clamps, Ducts, or Retractors	X				
[EVASC.0121]	Magnetic Field Limit		X		X	
[EVASC.0122]	Hardware Compatibility with xEMU Suit EMI		X		X	
[EVASC.0123]	Voltage Potential Discharge		X			

DRAFT

APPENDIX A
ACRONYMS AND ABBREVIATIONS AND GLOSSARY OF TERMS

A1.0 ACRONYMS AND ABBREVIATIONS

AIT	Analysis Integration Team
A/L	Airlock
AMS	Alpha Magnetic Spectrometer
APFR	Articulating Portable Foot Restraint
AU	Atomic Unit
AVT	Acceptance Vibration Test
BOL	Beginning of Life
BP	Best Practices
BRT	Body Restraint Tether
BTU	British Thermal Unit
C	Centigrade
CCB	Configuration Control Board
cm	centimeter
CETA	Crew and Equipment Translation Aid
COTS	Commercial-Off-the Shelf
CR	Change Request
DC	Direct Current
dia/diam	diameter
DFMR	Design for Minimum Risk
EEE	Electrical, Electronic, and Electromechanical
EMI	Electromagnetic Interference
EMU	Extravehicular Mobility Unit
EOL	End of Life
EVA	Extravehicular Activity
EVR	Extravehicular Robotics
F	Fahrenheit

DRAFT

FOD	Flight Operations Directorate
ft	feet
ft^3	cubic foot
g	gravity
GDRD	Generic Design Requirements Document
GFE	Government Furnished Equipment
HFE	Hydrofluoroether
Hg	Mercury
HIDH	Human Integration Design Handbook
HLS	Human Landing System
HTV	Human Thermal Vacuum
Hz	Hertz
ICD	Interface Control Document
IDD	Interface Definition Document
IFM	In-Flight Maintenance
in	inch
in-lb	inch-pound
in-oz	inch-ounce
IRCD	Interface Requirements and Control Document
ISS	International Space Station
IVA	Intravehicular Activity
JANTX	Joint Army-Navy Technical Exchange
JSC	Johnson Space Center
kg	kilogram
lb	pound
lbf	pound force
lbm	pound mass
LEO	Low Earth Orbit
LOS	Loss of Signal
m	meter

DRAFT

MDRD	Mockup Development Requirements Document
MEK	Methyl Ethyl Ketone
MIL-STD	Military Standard
MLI	Multi-Layer Insulation
mm	millimeter
MMOD	Micrometeroid Orbital Debris
MMWS	Modular Mini-Workstation
MSWG	Mechanical Systems Working Group
OCAD	Operational Control Agreement Database
OPR	Office of Primary Responsibility
ORU	Orbital Replacement Unit
N	Newton
NASA	National Aeronautics and Space Administration
Ncm	Newton centimeters
NDS	NASA Docking System
Nm	Newton meter
PDA	Pre-Delivery Acceptance
PFR	Portable Foot Restraint
PIA	Pre-Installation Acceptance
PIP	Push-in-Place
PLSS	Portable Life Support Subsystem
psi	Pounds per square inch
QD	Quick Disconnect
REEA	Retracting End Effector Assembly
RET	Retractable Equipment Tether
RF	Radio Frequency
ROD	Review of Design
RMS	Remote Manipulator System
RSS	Root Sum Square
RTV	Room Temperature Vulcanizing silicone rubber

DRAFT

sec	second
SEI	Sharp Edge Inspections
SPEC	Specification
SSP	Space Station Program
SSPCB	Space Station Program Control Board
SSRMS	Space Station Remote Manipulator System
TMG	Thermal Micrometeroid Garment
US	United States
V	Volts
VC-S	Visibly Clean - Sensitive
VITO	Vehicle Integration Test Office
WIF	Worksite Interface
x	Exploration

DRAFT

A2.0 GLOSSARY OF TERMS

TABLE A2.0-1 GLOSSARY OF TERMS

Term	Description
Contingency EVA	An EVA performed to deal with critical failures or circumstances, which are not adequately protected by redundancy or other means. An EVA not scheduled in the pre-mission timeline required to affect the safety of the crew, outpost, and/or safe return of the vehicle.
Crew	Human onboard the spacecraft or space system during a mission.
Demate	The act of isolating umbilical services by physical disconnection and removal of one compatible umbilical connector from another.
Design Reference Mission	Typical mission scenario encompassing tasks that are most likely to drive the architecture system design requirements. The Design Reference Missions are analyzed for all mission aspects from failure tolerance to hardware layout, software functionality and design suitability.
Flight	This is the sequence of events that takes place between liftoff and landing of a transportation vehicle.
Flight-like	Non-flight component built, inspected, and tested to flight component specifications used in flight operating conditions and built with manufacturing processes that are identical to those used for flight equipment.
Mate	The process of physically joining one compatible umbilical connector to another such that the connectors will thereafter remain joined without continued crew effort. This includes the opening of any isolation devices and joining of electrical & data pins and sockets necessary to provide full umbilical services.
Microgravity	An environment where gravity has little or no measurable effect, commonly referred to as "weightlessness" or "zero-g”.
Orbital-Replacement Unit	An item that can be removed and replaced as a unit of the organizational on-orbit level of maintenance.

DRAFT

Term	Description
Pressurized	The suit is considered pressurized at any point that it is sealed and a pressure delta over the ambient is incurred. When pressurized, the softgoods portion of the pressure bladder will inflate, impacting the stiffness of the suit; thereby impacting the suited crewmember dimensions, and mobility. The stiffening may cause the natural position of extremities to shift thereby impacting the neutral stance of the crewmember and the field of view.
Requirement	A necessary, quantifiable, and verifiable capability, function, property, characteristic, or behavior that a product must exhibit to solve a real world problem, or a constraint that it must satisfy or be satisfied.
Safe Haven	A specifically designated area, location or facility that protects crew or ground team from unplanned hazardous or dangerous events. A safe haven provides essential life support functions to keep personnel alive and healthy until the dangerous condition has been mitigated or rescue is performed.
Spacecraft	A spacecraft is considered to be any host vehicle such as habitats, rovers, Landings, as well as orbiting and transit vehicles.
Unpressurized	The suit is considered unpressurized at any point that it is not sealed, e.g. visors up. Some minimal pressure may build up in the umbilical and certain areas of the suit due to active inlet breathing gas flow; this has typically been up to approximately 0.3 psid (2 kPa-d). However, the suit is not inflated at this pressure. Since this pressure is not associated with sealed suit loop performance, leakage and pressure drop requirements do not apply to this pressure mode.
Vehicle	Often synonymous with the term spacecraft.
Worksite	EVA Worksites are locations which have been intentionally designed to be compatible with EVA Crew. EVA Worksites come in various forms, including Dedicated EVA Worksites which provide the capability to position the EVA Crew for performing a specified task. A Robotic-Assisted EVA Worksite provides the capability for robotically positioned EVA Crew to

Term	Description
	conduct tasks. A Free−Float EVA Worksite provides the capability for an unrestrained crewmember to perform specified tasks (such as single-hand operations). EVA, particularly when facilitated by mobility elements such as robotics, can access many areas of a spacecraft which were not formally designed to be EVA Worksites. Although conceptually possible, that should not be used as an automatic reason to apply EVA Worksite Outfitting requirements to the entire vehicle exterior.

DRAFT

APPENDIX B
EVA BEST PRACTICES

This appendix is a culmination of lessons learned/best practices for performing EVAs

EVABP-1 Multiple fasteners should be used in cases where single fastener usage would result in excessive torque specification for a single 7/16 in. fastener head. Other size EVA drivers exist, but are discouraged for numerous reasons (availability, commonality, EVA overhead, etc.). If required by hardware design, alternate EVA fasteners can be used following approval through the appropriate exception process.

EVABP-2 JSC EVA community has found that PIP pins can be particularly problematic, since most are Commercial off the Shelf (COTS). The following acceptance cleaning/testing have been implemented at JSC, and has resulted in successful screening and use of COTS PIP pins on orbit without failure.

1. Cleaning Provisions

   Flight PIP pins should be cleaned to the following procedure to remove any commercial lubricants and/or contamination that may prevent the PIP pin from operating properly:

   a) Soak in a Hydrofluoroether (HFE) 7100, Methyl Ethyl Ketone (MEK), or other approved solvent bath for 45 minutes
   b) Sonic soak in a HFE 7100, MEK, or other approved solvent bath for 120 minutes
   c) Internal flush for 60 minutes
   d) Dry and verify exterior cleanliness to Visibly Clean (VC)
   e) Section one sample PIP pin from the lot and inspect removed components for grease residue or contamination.

   Rationale: Various types of grease are used on off-the-shelf PIP pins. Destructive evaluation of one item from lot post-cleaning is necessary to verify the solvent removes the off-the-shelf lubricant.

2. Vibration Testing

   Flight PIP pins should be subjected to an Acceptance Vibration Test (AVT) per Table B-1. The AVT should be performed in both the longitudinal and transverse axes.

TABLE B-1 PIP PIN ACCEPTANCE VIBRATION TEST LEVELS

Load Factor	Frequency Range	Amplitude

	20 - 80 Hz	+3.0 dB/Octave
6.1 Grms	80 - 350 Hz	0.040 g^2/Hz
	350 - 2000 Hz	-3.0 dB/Octave

Test Duration - one minute per axis

3. Thermal Testing
   Flight PIP pins should be actuated at -100° F.
4. Destructive evaluations
   Destructive evaluation must be performed on representative samples from the flight lot to verify workmanship.
5. Proven Design
   A design that has proven to perform well is the AviBank Part #56789.
   PIP pins assembled by welding are not recommended as repeated thermal cycles may lead to propagation of weld flaws.

EVABP-3 Double Acting PIP Pin

The Human Landing System should provide double acting PIP pins with ease of actuation of the mechanism both during insertion and removal.

Rationale: This assumes that the actuation shaft is pushed in with the insertion of the PIP pin and pulled out with the removal of the PIP pin.

EVABP-4 External hardware should always be assessed for EVA contact hazards since planned locations can change and worksites can be created in unexpected places.

EVABP-5 Hardware should be designed to be removed/replaced via EVA in a contingency situation.

EVABP-6 Contact the EVA Office at NASA JSC early in the hardware development to facilitate design for EVA access and use with minimal cost and schedule impacts. Consider adding an EVA approval signature on all hardware drawings with EVA interfaces.

EVABP-7 Many EVA tools are developed for unique purposes that should not be used for generic purposes. Do not design hardware to use these unique tools without specific needs and discussions with the EVA Office at NASA JSC. Example: fasteners should use standard bolt heads (reference Appendix D).

EVABP-8 Design hardware to accept torque values with as wide a tolerance as possible. Thermal extremes can adversely affect a tool's ability to provide a specific torque.

EVABP-9 Using established hardware, including COTS hardware, might be more cost effective than designing new hardware as long as the established hardware meets the requirements and interfaces. However, COTS hardware may have limitations that are not readily apparent that make them inappropriate for the harsh environment. Several COTS tools actually flown have encountered problems, so make the decision with care and as much information as possible. Do not let cost alone decide as there is nothing cost effective in a tool that doesn't work. Among the problems encountered before:

a) Commercial hardware fabricated from tool steel may be subject to brittle fracture below –20 to – 50° F. Cold case material properties must be evaluated for all off the shelf equipment.
b) Most commercial lubricants fail at "cold" temperatures that are actually somewhat benign compared to many spaceflight extremes, leading to the surprise that an otherwise acceptable COTS solution must be reworked to utilize a significantly different lubrication approach. Even small amounts of residue lubricant can cause mechanism failure. In order to assure hardware operation at cold case temperature extremes, remove all grease and replace with baked on dry film coatings. Excess dry film must be removed in order to prevent buildup that can cause contamination and mechanical interference.
c) Off the shelf equipment often exhibits wide variation in end item dimensions and material properties. Fit checks, measurements and lot testing of materials should be implemented to assure that hardware will meet use requirements. Fit checks at ambient environment will not demonstrate on-orbit "thermal fit". Gages need to take into consideration thermal fit.
d) Vendors have changed hardware but not part numbers and didn't notify the customer. Crucial product lines (for spares/replacements) may become unavailable. For inexpensive long shelf-life COTS items, a surplus should be purchased to ensure sufficient spares.

EVABP-10 Multi-Layer Insulation (MLI)/Softgoods Good Practices [Design for thermal blankets]

a) Tether loops should be plentiful, concentrated near the mating seams. Use of contrasting color/stitching can improve effectivity and visibility.
b) MLI seams to be mated EVA should have alignment marks both horizontally and vertically (forming a T at the edge) of a contrasting color to aid in EVA installation.
c) Velcro should have either a metal backing or a glove pocket behind the strips to aid in proper mating of hook and pile.
d) Restraint straps should be provided to hold MLI out of the way once opened. Straps should be long enough to reach a handrail or provide a self-restraint method. Velcro should also be used on the strap for stowage. All tether straps should include a tether loop.
e) Velcro that may be exposed for a length of time should be covered with a flap to prevent degrading. Flaps should also be added to MLI for EVA interfaces to allow

access without removing entire MLI cover wherever feasible. MLI covers/blankets with multiple flaps should be numbered/labeled sequentially to aid in proper identification during EVA operations.

f) All MLI should be designed to be EVA removable (contingency) with ¼ turn fasteners preferred (no tool required).
g) Stiffeners should be provided on large blankets (more than 16 ft^2 to help in EVA handling).
h) No staples should be left on exposed MLI for sharp edge considerations.

EVABP-11 Connectors exposed to sunlight should be provided with some means of thermal protection to preclude exceeding touch temperature requirements.

EVABP-12 A full complement of EVA testing should be performed on EVA concepts (glove box, 1-g, zero-g aircraft, Human Thermal Vacuum (HTV)) as necessary. Testing environment depends on the complexity of the EVA concept. Testing that involves EVA mockups should be of the appropriate fidelity to perform thorough testing (e.g. functional, volumetric, etc.). If testing at JSC, requirements for mock-up hardware and training simulators should be coordinated with the EVA Office at NASA JSC. A Mockup Development Requirements Document (MDRD) should be developed in conjunction with EVA Mission Operations Directorate personnel. Instructions for preparing an MDRD are found in JSC 28528, Preparation and Revision of CX Mockup Development Requirement Document (MDRD). EVA testing is always preferable to analysis and takes precedence over analytical results.

EVABP-13 Wherever possible, perform verification of flight hardware by test. If another method is used, documented rationale should substantiate why testing cannot be accomplished.

EVABP-14 Mechanism/robotics commanding and movement should be limited and, if possible eliminated, during EVA to prevent placing the EVA crew at risk.

EVABP-15 Battery power indication should be incorporated as part of a power device, not the battery or battery pack itself. If indication cannot be incorporated, the power device should be designed to shut down when the battery reaches a certain low voltage to preclude over discharge.

EVABP-16 Don’t cover or interfere with handrails/handholds, tether points, or foot restraint receptacles with MLI or other objects.

EVABP-17 Electrical, Electronic, and Electromechanical (EEE) Parts Sources

1. Approved parts are listed in the following locations except for Kapton wire (MIL-W-81381), which requires written program approval before use.
    a. SSP 30423, Space Station Approved EEE Part List
2. EVA-EXP-0034, Exploration EVA System Technical Standards
3. Semiconductors should be Joint Army-Navy Technical Exchange (JANTX) in accordance with MIL-S-19500, General Specification for Semiconductor Devices.
4. Evaluate any part not selected by any of the above per the Engineering Directorate Certified Parts Approval Process detailed in JSC-61360, and have it approved by its controlling authority.

EVABP-18 Wire ties should be used only when the use has been analyzed effectively and the wire ties have been shown to safely perform the function proposed. Wire ties are not certified to be used more than once or as launch restraints. Refer questions or concerns with the EVA use of wire ties to the EVA Office Tools and Crew Aids Panel.

EVABP-19 Bolt torques should be limited to less than 25 ft-lbs. (33.9 Nm) for the ratchet wrench and 15 ft-lb (20.3 Nm) for the power tool, which provides for one-handed operation. For overall EVA efficiency, the Human Landing System should design all bolted interfaces such that the maximum torque required is no more than 15 ft-lbs. (20.3 Nm).

EVABP-20 Techniques for lightening material should not include through holes that can act as an entrapment hazard. A back plate or pocket holes can be used to lighten the material without creating an entrapment hazard.

EVABP-21 Hardware should be designed with as much versatility and resiliency as possible to protect for future or unforeseen activities.

EVABP -22 Rolled Threads and Head Height

1. Use of rolled threads for EVA fasteners - Rolled threads are stronger and less likely to yield, gall, or seize. Utilizing a double height head fastener can often lead to machining of fasteners (more expensive than using high quality aerospace grade fasteners with tight tolerances). The rolled fastener heads need to be confirmed with/concurred with ES.
2. Head Height - EVA fasteners are based on “double height” bolt heads – it’s how we get good engagement to deliver high torque to fasteners. Even if COTS bolts are used, the heads should still be “double height” to ensure adequate transfer of load between the socket and the fastener’s bolt head.

EVABP -23 Some crew-applied dynamically loads (oscillatory in nature) may need some restrictions on their frequency of cyclic application and durations in order to avoid or limit structural dynamic amplification and to lower the likelihood of an overload. Vulnerable

structures or mechanisms are those that may possess low-frequency natural modes of vibrations (approximately 2 hertz and lower). Examples are mechanisms and cantilevered masses, whether in temporary or permanent configurations.

EVABP -24 Design hardware to be assessed for EVA contact hazards.

DRAFT

APPENDIX C NON-EVA REQUIREMENTS AND BEST PRACTICES FOR CONSIDERATIONS

This appendix contains those requirement and best practices that are considered to be non-EVA, but worthy of consideration when designing EVA interface.

C-1 REQUIREMENTS

Fasteners - Orientation/Retention

The Human Landing System shall orient and/or retain PIP pins so failure of the mechanism during launch or landing precludes release.

Protruding Fasteners

The Human Landing System shall provide sharp edge protection for protruding fastener threads.

> *Rationale: If structurally sound, acorn nuts can provide this sort of protection. Room Temperature Vulcanizing (RTV) does not always stay on exposed threads over a long duration.*

DRAFT

Handling - Standard Interface Temperature Differential

The Human Landing System shall use a standard hardware interface temperature differential per the Standard Interface Temperature Differential Table when designing all EVA hardware to ensure fit and function of interfacing hardware. Use an interface temperature differential of 100°F when using material surface coatings with a low EOL optical property ratio (0.9 maximum). Use an interface temperature differential of 200°F (112°C) as a design goal for any interface hardware with a high EOL surface coating (greater than 0.9). A reduced temperature differential, determined by analysis, may be used if required for fit/function, and shall be documented in the Safety Data Package.

TABLE C-1 STANDARD INTERFACE TEMPERATURE DIFFERENTIAL

EOL Surface Optical Property Ratio	Standard Interface Temperature Differential
≤ 0.9	100 deg F (56 deg C)
> 0.9*	200 deg F (112 deg C)

C-2 NON-EVA BEST PRACTICES

Materials and Process Best Practice

MP-1 All currently available soft goods, including Velcro, Kevlar, Vectran, nylon, fiberglass and Nomex are affected by prolonged exposure to the EVA environment. The combined effects of atomic oxygen, ultraviolet light, and abrasion during use can reduce the load capability of soft goods. Soft goods should not be used in load bearing applications that are exposed to the EVA environment without high safety factors, backup load paths and/or protection from atomic oxygen and ultraviolet effects.

Non-EVA Best Practices

NEBP-1 Real time access to high fidelity flight-like hardware is very beneficial for procedure development and troubleshooting in contingency cases.

NEBP-2 Avoid the use of welded hardware. Repeated thermal cycles may lead to propagation of weld flaws.

Note that refers to ground welding; on-orbit welding is not available.

NEBP-3 Some locking compounds are difficult to apply without contamination of adjacent surfaces and mechanisms. Results of the contamination may not be apparent until the hardware reaches cold case temperatures.

NEBP-4 Jam nuts can be used on non-EVA operable fasteners; however neither jam nuts nor anaerobic locking compounds alone provide positive locking and must be used in concert with safety wire and tab washers. The preferred method of locking is preload combined with other conventional aerospace locking features. Self-locking features that retain full running torque after preload is relieved or the threads move can also provide positive locking.

NEBP-5 Some fasteners are difficult [spiral cam fasteners] to remove and need to be demonstrated to work with EVA gloved operations. These type of fasteners can be “splayed” if improperly operated during shield installation. If a fastener is splayed during installation, it will not release again nominally, and will not reengage later. Contingent reapplication should evaluate the minimum number of required fasteners.

DRAFT

APPENDIX D
COMMON TOOLS

All spaceflight vehicles and missions have incorporated some form of tool kits to facilitate both in flight servicing as well as mission content. Examples include: nominal ISS Assembly EVA Hardware, Space Shuttle Contingencies (both IVA and EVA), and Apollo Lunar Surface Geology. IVA tools are used by crewmembers to assist in daily maintenance and repair tasks. EVA Hardware consists of those tools necessary to allow the crewmember to perform EVA safely and productively (e.g. safety tethers, BRT, hand tools, etc.).

This Appendix provides the current list of IVA and EVA tools planned to be manifested for an exploration class mission. Along with the tools a list of approved fastener drive types are provided. Historically the Shuttle In-Flight Maintenance (IFM) kit included a Tool Locker which consisted of nearly 100 different tools and a Repair Locker that housed ORU hardware for fluid lines. The ISS currently has over 300 different hand tools, 8 Maintenance Kits, several Diagnostic Tools, and IFM Parts Kit with spare screw, nuts, bolts and electrical components. The tool kit for exploration class missions will not be as large and therefore restrictions need to be placed on designers to ensure their hardware can be serviced by this limited kit.

All spacecraft, suits, and other Human Landing Systems must understand this requirement early on in development to ensure cost effective implementation and proper adherence to the requirement. If a piece of hardware must utilize a tool not on this list, the request should be made to the proper Program Control Board. Some level of control is needed to ensure the kit doesn't grow beyond its mass and volume constraints.

DRAFT

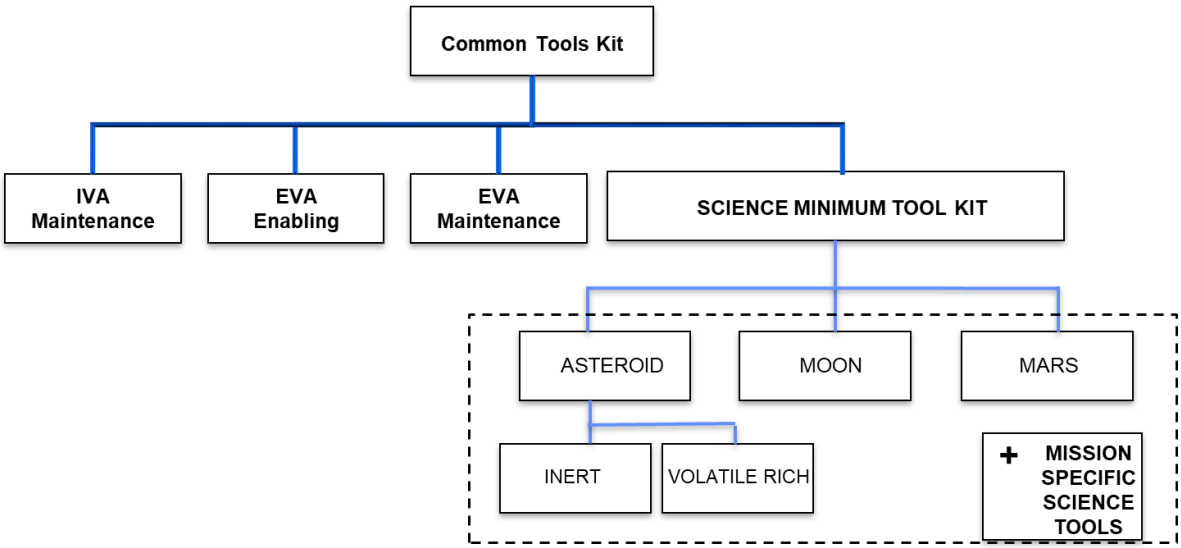

FIGURE D-1 COMMON TOOLS MATRIX

D.1.0 Mechanical Tooling

The minimal of mechanical tooling has been specifically selected (reference Mechanical Tooling Table) to pair with the common fasteners described in Section 3.0. Mechanical Tooling Reference Figure below lists and shows the IVA Nominal Usage and IFM tooling and Leatherman WAVE Specs Figure details the features of the Leatherman Wave.

TABLE D.1.0-1 MECHANICAL TOOLING

1.	3/8” Ratchet Driver	9.1	3/8” Socket
2.	3/8” Manual Driver	9.2	7/16” Socket
3.	4” Socket Extension for 3/8” Square Drive	89.3	1/2” Socket
4.	Leatherman “WAVE”	9.4	3/4” Socket
5.	10” Adjustable Wrench	10.	Interface Adapter 3/8”square to 1/4” Hex
6.	6” Adjustable Wrench	11.	Interface Adapter 2” Bit Extension
7.1	T7 Six Lobe Recess Bit	12.	Kapton Tape
7.2	T10 Six Lobe Recess Bit	13.	Duct Tape
7.3	T20 Six Lobe Recess Bit	14.	Zip Ties
8.1	5/32” Hex Key Driver Bit	15.	Headlamp
8.2	3/16” Hex Key Driver Bit	16.	IVA to EVA Socket Adapter
8.3	1/4” Hex Key Driver Bit	17.	**<TBD-HLS-EVA-002>** Stowage Drawer and/or Pouch with restraints
8.4	5/16” Hex Key Driver Bit	18.	Torque Wrenches (**<TBD-HLS-EVA-003>** range and quantity)
8.5	3/8” Hex Key Driver Bit		

DRAFT

FIGURE D.1.0-1 MECHANICAL TOOLING REFERENCE

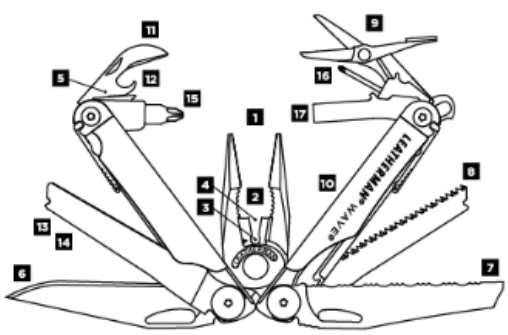

1 Needlenose Pliers
2 Regular Pliers
3 Hard-wire Cutters
4 Wire Cutters
5 Wire Stripper
6 420HC Knife
7 420HC Serrated Knife
8 Saw
9 Spring-action Scissors
10 Ruler (8 in | 19 cm)
11 Can Opener
12 Bottle Opener
13 Wood/Metal File
14 Diamond-coated File
15 Large Bit Driver
16 Small Bit Driver
17 Medium Screwdriver

FIGURE D.1.0-2 LEATHERMAN WAVE SPECS

DRAFT

D.1.0.1 MECHANICAL TOOLING RATIONALE

Reference Table below for historical rationale of selection.

TABLE D.1.0.1-1 MECHANICAL TOOLING RATIONALE

	Mechanical Tool	Rationale for Selection
1.	3/8” Ratchet Driver	The 3/8” square interface was chosen as the standard due to its strength and commonality, i.e. the HST Power Tool as well as the PGT Power Tool have 3/8” square interfaces, and there are flight-certified manual and ratchet drivers in this size. While the 3/8” driver size tool is a bit heavier than its ¼” drive counterpart, it makes up for it in strength. A ¼” drive ratchet can be used for most things but its weakness lies in higher torque applications. A 3/8” Drive Ratchet cannot only handle higher torque applications than its ¼” counterpart but it can also be used on the low torque applications the ¼” drive ratchet is suited for. Designing all fasteners to be easily accessible so that an extension wouldn’t be needed is a stretch, so it would be wise to fly an extension that could enable crew to reach fasteners that otherwise wouldn’t be accessible. This extension should be long enough to accommodate most scenarios while also not being so long as to inhibit use (some areas will most likely have tight clearances).
2.	3/8” Manual Driver	
3.	4” Socket Extension for 3/8” Square Drive	
4.	Leatherman “WAVE”	With so many options available in such a small package, this tool offers a way to handle any general issues crew may encounter.
5.	10” Adjustable Wrench	Versatility. For use on pipe fittings or as a lever for other applications. 10” and 6” chosen are flight certified.
6.	6” Adjustable Wrench	
7.1	T7 Six Lobe Recess Bit	Personnel responsible for maintenance disliked offset-cruciform and hex-head fasteners due to stripping issues. Six-lobed recess fasteners were derived as a compromise. Orion came to a similar conclusion and baselined these fasteners as well. The three bits indicated will drive five sizes of fasteners used in sealing avionics boxes and other electronics.
7.2	T10 Six Lobe Recess Bit	
7.3	T20 Six Lobe Recess Bit	
8.1	5/32” Hex Key Driver Bit	These drivers are the standard but also diverse enough in size that they will be able to accommodate multiple types of fastener applications.
8.2	3/16” Hex Key Driver Bit	
8.3	1/4” Hex Key Driver Bit	
8.4	5/16” Hex Key Driver Bit	
8.5	3/8” Hex Key Driver Bit	
9.1	3/8” Socket	

DRAFT

	Mechanical Tool	Rationale for Selection
9.2	7/16” Socket	Similar to the Hex Head Drivers above, these sockets are pretty standard but also diverse enough in size that they should be able to accommodate many different types of fastener applications from light panels to heavy ORU hold-downs. Any fasteners of these sizes should also be designed not to require a deep well socket. All sockets will be stainless steel so that they may be used EVA if necessary.
9.3	1/2” Socket	
9.4	3/4” Socket	
10.	Interface Adapter 3/8”square to 1/4” Hex	For adapting all 3/8” square interface drivers to accept the hex key and six-lobe recess bits. The 2” extension will allow access into tight-clearance areas.
11.	Interface Adapter 2” Bit Extension	
12.	Kapton Tape	Multi-use. Can be used IVA as well as for EVA operations.
13.	Duct Tape	Multi-use. Can be used for contingency scenarios.
14.	Zip Ties	Multi-use. Can be used for contingency scenarios.
15.	Headlamp	
16.	IVA to EVA Socket Adapter	
17.	**<TBD-HLS-EVA-002>** Stowage Drawer and/or Pouch	To organize and contain all IVA tools.
18.	Torque Wrenches (**<TBD-HLS-EVA-003>** range and quantity)	Torque wrenches are required to ensure proper tension and loading of all parts an assembly. There will need to be multiple torque wrenches to handle a range of torques. The exact number and ranges are yet to be determined.

DRAFT

D1.0.2 TORQUE WRENCH

While two different torque wrenches were flown on Shuttle, there are currently five different types flown on the ISS. The discussions of whether torque wrenches will be part of a common tools kits in all exploration missions are ongoing. There are arguments against flying torque wrenches. For example they take up mass and volume. In addition many times torque requirements are levied on the ops community when simpler, albeit less precise, methods could be used; when dealing with repair options often times having a crew member “hand tighten” a fastener would be deemed acceptable to get by until further repairs can be conducted. Finally, torque wrenches need almost yearly calibration, something that may prove difficult during long duration exploration missions such as that to Mars. However it is also recognized that there are important reasons for using torque wrenches and that there will need to be many discussions with the community to decide which path to take. So for the purpose of this document, it will be assumed that the necessary torque wrenches will be available in the tool kit.

D.2.0 ELECTRICAL TOOLING

The tooling that all nominal and IFM electrical work (reference Electrical Tooling Table) must be conducted with are captured below in Electrical Tooling Reference Figure.

TABLE D.2.0-1 ELECTRICAL TOOLING

1.	ESD Ground Strap	4.	Wire Stripper
2.	Multi-Meter Kit	5.	Fuse Puller (**<TBD-HLS-EVA-004>** based on fuse type used)
3.	Electrical Tape	6.	Wire Cutter

FIGURE D.2.0 ELECTRICAL TOOLING REFERENCE

DRAFT

D.2.0.1 ELECTRICAL TOOLING RATIONALE

Reference Table below for historical rationale of selection.

TABLE D.2.0.1-1 ELECTRICAL TOOLING RATIONALE

	Electrical Tool	Rationale for Selection
1.	ESD Ground Strap	Needed to avoid static discharge
2.	Multi-Meter Kit	Needed for testing/validating electrical connections and specifications
3.	Electrical Tape	Needed for safely covering electrical connections/splices
4.	Wire Stripper	Needed for contingency scenarios
5.	Fuse Puller (**<TBD-HLS-EVA-004>** based on fuse type used)	Some fuses require a puller to access or replace fuses
6.	Wire Cutter	Needed for contingency scenarios

D.3.0 COMMON FASTENERS

The following Sections outline the types of flight fasteners.

D.3.1 FLIGHT FASTENERS

The Flight Fastener Table provides a listing of the mechanical fasteners and drivers for flight application. The number of fasteners have been scaled down based on the type and application. The smaller fasteners listed (#4 – #10) are commonly used on avionics boxes whereas larger fasteners are used for structural loading. By constraining the type of fasteners in this way, we cut down on the number of bits/sockets needed to drive them.

DRAFT

TABLE D.3.1 FLIGHT FASTENERS

Mechanical Fasteners & Drivers			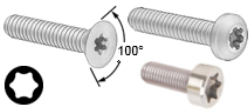		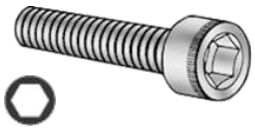		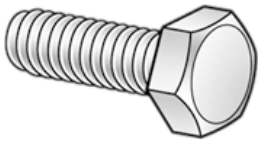	
			***Six Lobe Recess Screw (Flat, Fillister, Pan Head)**		**Socket Head Cap Screw**		**Hex-Head Bolt**	
Nomenclature		Thread Diameter	6-lobe Bit Size	Certified NAS Fastener Example	Hex Key Bit Size	Certified NAS Fastener Example	Socket Size	Certified NAS Fastener Example
#2	**02**	**.086**	**T7**	NAS5310 to 5321-	---		---	---
#4	**04**	**.112**	**T10**	NAS5310 to 5321-	---		---	---
#6	**06**	**.138**	**T10**	NAS5310 to 5321-	---		---	---
#8	**08**	**.164**	**T20**	NAS5310 to 5321-	---		---	---
#10	**3**	**.190**	**T20**	NAS5310 to 5321-	**5/32**	NAS1351N3-	**3/8**	NAS1003-
1/4	**4**	**.250**	---	---	**3/16**	NAS1351N4-	****7/16**	NAS1004-
5/16	**5**	**.3125**	---	---	**1/4**	NAS1351N5-	**1/2**	NAS1005-
3/8	**6**	**.375**	---	---	**5/16**	NAS1351N6-	---	---
7/16	**7**	**.4375**	---	---	**3/8**	NAS1351N7-	---	---
1/2	**8**	**.500**	---	---	**3/8**	NAS1351N8-	****3/4**	NAS1008-

*Advocate as new standard – further validation required

** Duplicate of EVA double-high sockets

DRAFT

D.3.2 GROUND 'STAND-IN' FASTENERS

The Ground Testing Fasteners Table provides a listing of the mechanical fasteners and drivers for ground application. This section is meant to be **informational only**. This list is provided specifically because at the time of this research the six lobe recess fasteners were found to be expensive and had a long lead time associated with them. The offset cruciform fasteners were more affordable, more readily available and most importantly, they could be used as a 1 to 1 stand-in for the six lobe fasteners. More specifically, every aspect of the fasteners are the same except for the head type. So the intent was to provide hardware developers an alternative option only for **ground testing or prototypes** if cost or schedule prevented them from using the recommended six lobe fasteners. Of course, the qualification and flight units would then use the six lobe fasteners, without any additional work. It is recognized that offset cruciform heads are not the ideal fastener head and there is a history of known issues with tool slippage causing burrs and damaging hardware. Offset cruciform fasteners should be avoided for flight hardware and only implemented in ground hardware when absolutely necessary. Finally, it is also understood that the hardware developers can utilize other means to get around issues in using six lobe fasteners and it is up to their discretion to make that decision.

DRAFT

TABLE D.3.2 GROUND TESTING FASTENERS

Mechanical Fasteners & Drivers			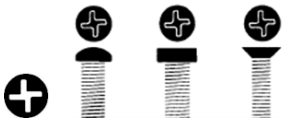		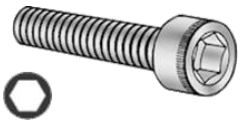		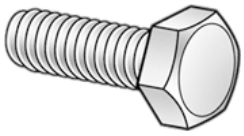	
			Offset Cruciform (Flat, Fillister, Pan Head)		**Socket Head Cap Screw**		**Hex-Head Bolt**	
Nomenclature		Thread Diameter	O.C. Bit Size	Certified NAS Fastener Example	Hex Key Bit Size	Certified NAS Fastener Example	Socket Size	Certified NAS Fastener Example
#2	**02**	**.086**	**#2**	NAS11XXE02-	---		---	---
#4	**04**	**.112**	**#4**	NAS11XXE04-	---		---	---
#6	**06**	**.138**	**#6**	NAS11XXE06-	---		---	---
#8	**08**	**.164**	**#8**	NAS11XXE08-	---		---	---
#10	**3**	**.190**	**#10**	NAS11XXE10-	**5/32**	NAS1351N3-	**3/8**	NAS1003-
1/4	**4**	**.250**	---	---	**3/16**	NAS1351N4-	***7/16**	NAS1004-
5/16	**5**	**.3125**	---	---	**1/4**	NAS1351N5-	**1/2**	NAS1005-
3/8	**6**	**.375**	---	---	**5/16**	NAS1351N6-	---	---
7/16	**7**	**.4375**	---	---	**3/8**	NAS1351N7-	---	---
1/2	**8**	**.500**	---	---	**3/8**	NAS1351N8-	***3/4**	NAS1008-

* Duplicate of EVA double-high sockets

DRAFT

D.4.0 EVA TOOLS

There are currently hundreds of distinct EVA Tools that have flown on both Shuttle and ISS. These tools serve a number of purposes such as supporting construction and maintenance tasks, providing a platform for stowing other tools and others are required for the safety of the crewmember. Any hardware that is outside of the habitable volume should be able to be serviced by the tools listed in this section. The tools listed below are those that have flown on the ISS. It is assumed these tools or a tool with similar functionality will be provided on exploration missions. Please note that missions to planetary surfaces will most likely need to include the ability to perform EVA in transit to the destination. This would be a microgravity EVA and therefore require the tools outlined in Section 4.2, in addition to the tools outlined in Section 4.3 for use when the crew arrive at the planetary surface. Any duplicates between these lists would likely be shared to limit mass and volume.

D.4.1 EVA TASK TOOLS

EVA Task tools must be strictly controlled to limit line and quantities. This minimal complement are provided to help perform the actual maintenance or contingency tasks.

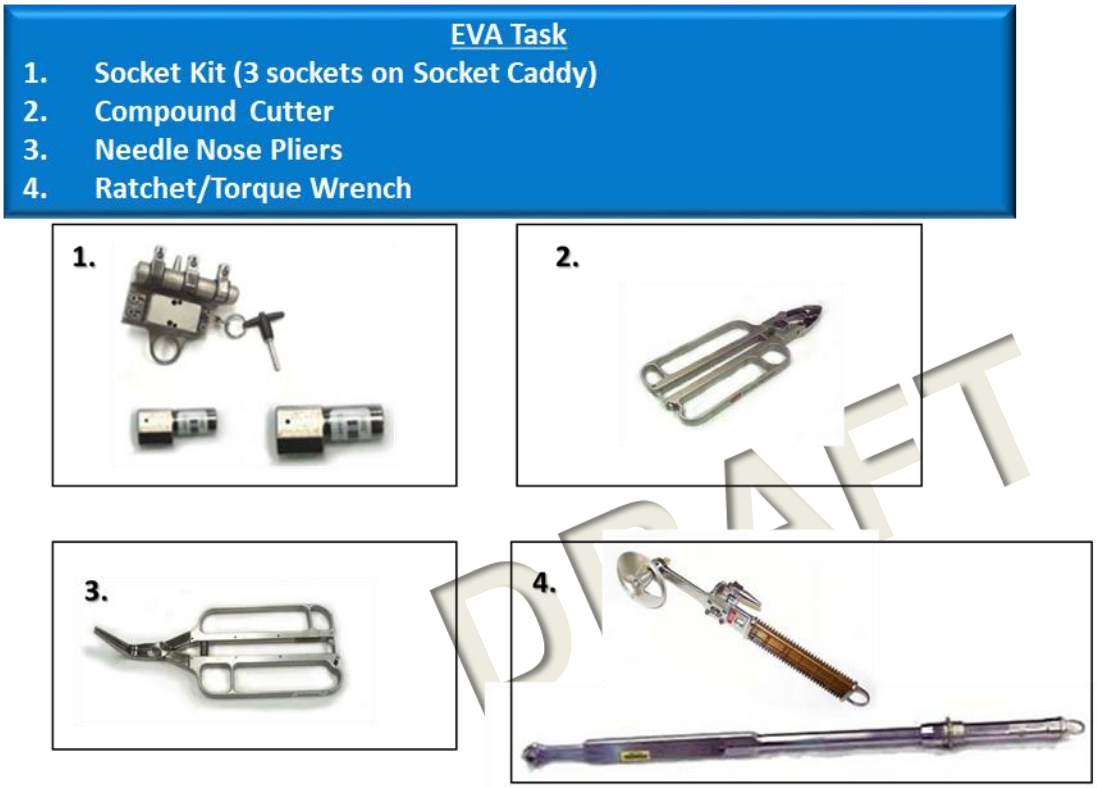

FIGURE D.4.1-1 EVA TASK TOOLS

D.4.1.1 EVA TASK TOOLS RATIONALE

Reference Table below for historical rationale of selection.

TABLE D.4.1.1-1 EVATASK TOOL RATIONALE

	EVA Task Tool	Rationale for Selection
1.	Socket Kit	Currently, there are several sockets for use on ISS. It may be possible to reduce the number of external vehicle fasteners to one or two sizes, as well as limit the deep well accessibility of these fasteners. If this is the case, there may no longer be a requirement to carry several sockets on a caddy. All sockets for use IVA will be specified to be stainless steel, so they may be used EVA if required. If all tasks are going to allow crewmembers up close access, then 2" long rigid sockets should suffice.
2.	Compound Cutter	Multiple uses in various scenarios/contingencies
3.	Needle Nose Pliers	Multiple uses in various scenarios/contingencies
4.	Ratchet/Torque Wrench	The torque wrench is a calibrated item that is only calibrated for "18 months", and then needs to be replaced. The units on ISS have expired, but they can still function as ratchet wrench (with a long moment arm). Torque Wrench Bag is required because torque wrench requires thermal conditioning to maintain higher accuracy.

DRAFT

D.4.2 TOOLS ENABLING PERFORMANCE OF A MICROGRAVITY EVA

These tools support successful performance of a microgravity EVA and are the minimum compliment for leaving the habitable volume.

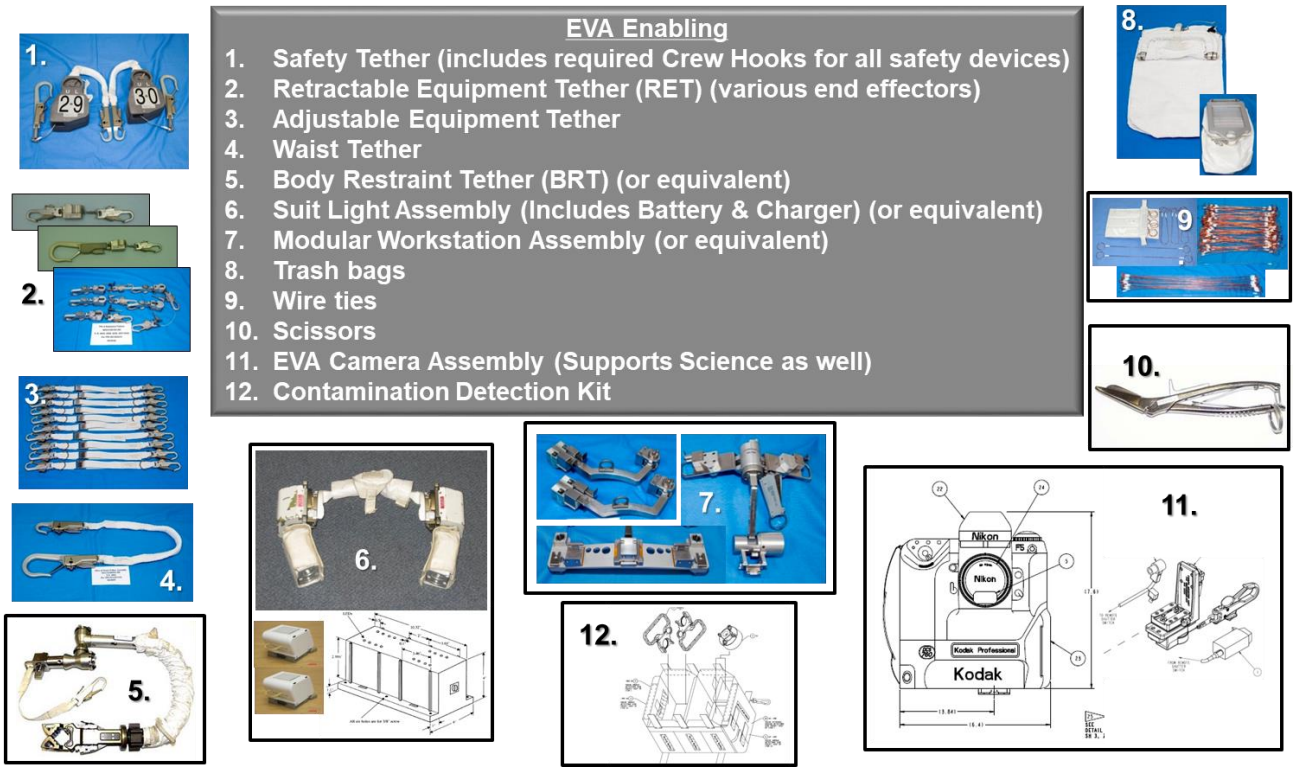

FIGURE D.4.2-1 MIGROGRAVITY EVA ENABLING TOOLS

DRAFT

D.4.2.1 MICROGRAVITY EVA ENABLING TOOLS RATIONALE

TABLE D.4.2.1-1 MICROGRAVITY EVA ENABLING TOOLS RATIONALE

	EVA Enabling Tool	Rationale for Selection
1.	Safety Tether (includes required Crew Hook for all safety devices)	Currently required for microgravity EVA
2.	Retractable Equipment Tether (various hook configurations)	Quantity is task specific. For ISS, the "must have available at all time" quantity is 29 (of different configurations of hooks). This number has grown over the years, and does not include tethers that are integrated into bags such as the Crewlock EVA bag (4 RETS are part of this bag).

	EVA Enabling Tool	Rationale for Selection
3.	Adjustable Equipment Tether	Multiple uses in various scenarios
4.	Waist Tether	Multiple uses in various scenarios
5.	Body Restraint Tether	Or equivalent evolved version – used in body stabilization on an integrated stack in microgravity
6.	xEMU Suit Light Assembly (includes battery and battery charger)	Or equivalent – this type of light assembly may change with the xEMU suit. Batteries and charger must be integrated.
7.	Modular Mini Workstation	Or equivalent that interfaces with the new xEMU suit
8.	Trash bags	Both large and small. Trash bags are utilized for keeping small parts, fasteners, and other items confined.
9.	Wire ties	Multiple uses in various scenarios/contingencies. Short Wire ties are also used to make "additional" tether loops on MMWS T-Bar to manage equipment hooks.
10	Scissors	Multiple uses in various scenarios/contingencies.
11.	EVA Camera Assembly (supports science as well)	Documentation will be key for any future mission. Specific lenses and lighting requirements will vary based on destination.
12.	Contamination Detection Kit	The back of the xEMU Portable Life Support Subsystem (PLSS) will be exposed to the space environment, spacecraft, and microgravity, and will enter the habitable volume. The potential exists for contamination by NH3, propellant, or other toxic substances.

DRAFT

D.4.3 TOOLS ENABLING PERFORMANCE OF A SURFACE EVA

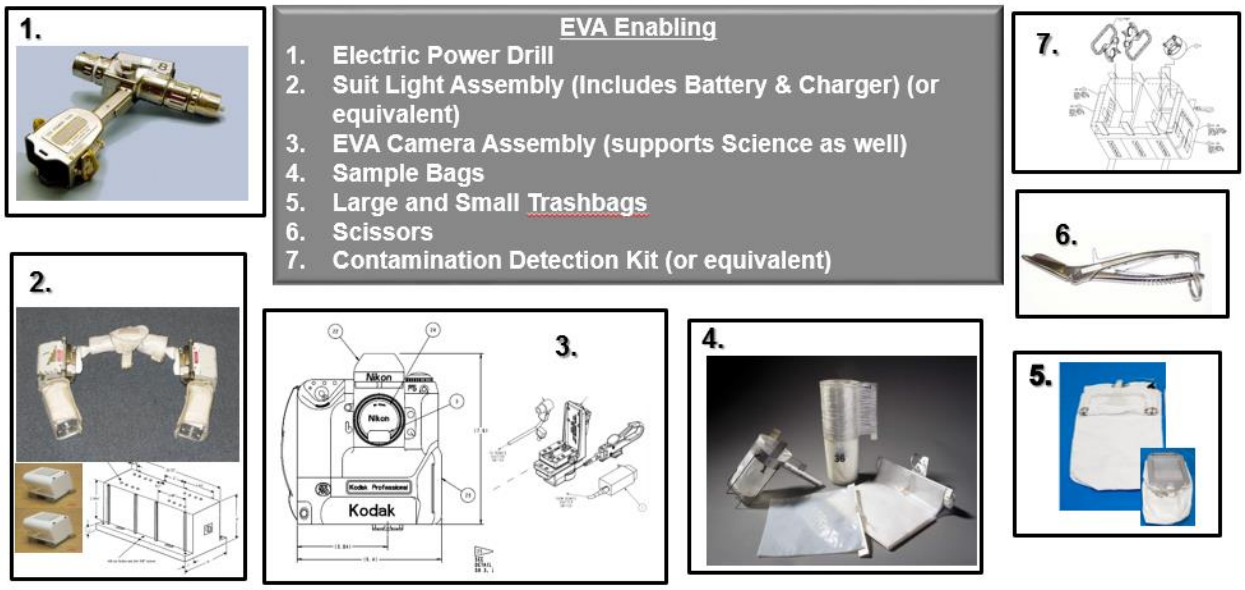

FIGURE D.4.3-1 SURFACE EVA ENABLING TOOLS

D.4.3.1 SURFACE EVA ENABLING TOOLS RATIONALE

Reference Table below for historical rationale of selection.

TABLE D.4.3.1-1 SURFACE EVA ENABLING TOOLS RATIONALE

	EVA Enabling Tool	Rationale for Selection
1.	Electric Power Drill	This drill would be used for driving or releasing bolts on hardware.
2.	xEMU Suit Light Assembly (includes battery and battery charger)	Or equivalent – this type of light assembly may change with the xEMU suit. Batteries and charger must be integrated.
3.	EVA Camera Assembly (supports science as well)	Documentation will be key for any future mission. Specific lenses and lighting requirements will vary based on destination.
4.	Sample Bags	It is good practice for the EVA crew to always have the ability to stow scientific samples of interest whenever they go EVA.
5.	Trash Bags	Both large and small. Trash bags are utilized for keeping small parts, fasteners, and other items confined.
6	Scissors	Multiple uses in various scenarios/contingencies.
7.	Contamination Detection Kit	The back of the xEMU Portable Life Support Subsystem (PLSS) will be exposed to the space environment, spacecraft, and microgravity, and will enter the habitable

DRAFT

	EVA Enabling Tool	Rationale for Selection
		volume. The potential exists for contamination by NH3, propellant, or other toxic substances.

DRAFT

D.4.4 SCIENCE SPECIFIC EVA HARDWARE

EVA Geology is a science driven task focused on exploring and understanding natural bodies (planets, moons, asteroids, etc.) and their evolution. There are also dozens of tools that fall under EVA Geology/Science Tools for surface operations.

EVA Geology "Enabling"

1. "Hammer" (will require impact containment for planetary surface)
2. Tongs/Clamshell (Doubles as mobility & sample protection)
3. Surface Sampling Device
4. In-Situ surface Characterization Device
5. Sample Bag Kit (Individual Bags Loaded In Bag Dispenser)
6. Subsurface-at-Depth Sampling Kit
7. Sample Storage & Handling Device
8. Sample Storage Interface on Vehicle
9. Simple Sealable Volatiles Container
10. Camera (book kept under "EVA Enabling")
11. Crew Lock Bag

FIGURE D.4.4-1 EVA GEOLOGY ENABLING HARDWARE

**Note: This would be similar for an asteroid mission in microgravity

DRAFT

APPENDIX E
RESERVED

DRAFT

APPENDIX F OPEN WORK

F1.0 TO BE DETERMINED

The table To Be Determined Items lists the specific To Be Determined (TBD) items in the document that are not yet known. The TBD is inserted as a placeholder wherever the required data is needed and is formatted in bold type within carets. The TBD item is numbered based on the document number, including the annex, volume, and book number, as applicable (i.e., **<TBD-XXXXX-001>** is the first undetermined item assigned in the document). As each TBD is resolved, the updated text is inserted in each place that the TBD appears in the document and the item is removed from this table. As new TBD items are assigned, they will be added to this list in accordance with the above described numbering scheme. Original TBDs will not be renumbered.

TABLE F1-1 TO BE DETERMINED ITEMS

TBD	Requirement	Description	ECD
<TBD-HLS-EVA-002>	Appendix D – Mechanical Tools	Need to determine the Stowage Drawer and/or Pouch	
<TBD-HLS-EVA-003>	Appendix D – Mechanical Tools	Need to determine the torque wrench range and quantity	
<TBD-HLS-EVA-004>	Appendix D – Electrical Tools	Need to determine the type of fuse used while in lunar orbit Elements (if needed)	
<TBD-HLS-EVA-005>	Appendix G	One TBD to represent all TBDs currently indicated in Appendix G: Human Landing System Applicability Matrix. Need to perform individual assessments by element/module for applicability to EVA Compatibility requirements based on Human Landing System Con Ops.	
<TBD-HLS-EVA-006>	3.5.3 [EVASC.0155]	Need to determine what are the appropriate partial gravity Crew-induced loads	

DRAFT

F2.0 TO BE RESOLVED

The table To Be Resolved Issues lists the specific To Be Resolved (TBR) issues in the document that are not yet known. The TBR is inserted as a placeholder wherever the required data is needed and is formatted in bold type within carets. The TBR issue is numbered based on the document number, including the annex, volume, and book number, as applicable (i.e., **<TBR-XXXXX-001>** is the first unresolved issue assigned in

the document). As each TBR is resolved, the updated text is inserted in each place that the TBR appears in the document and the issue is removed from this table. As new TBR issues are assigned, they will be added to this list in accordance with the above described numbering scheme. Original TBRs will not be renumbered.

TABLE F1-2 TO BE RESOLVED ITEMS

TBD	Requirement	Description	ECD
<TBR-HLS-EVA-001>	3.7.1.5.3 [EVASC.0151]	The complete complement of Exploration tools has not been formally agreed to and the table is a template for Exploration missions (addresses CR-DSG-C0050 Comment 160)	
<TBR-HLS-EVA-002>	3.2.3 [EVASC.0154]	Incapacitated Crewmember Rescue support equipment/interfaces need to be defined once architecture is understood	
<TBR-HLS-EVA-003>	3.9.22 [EVASC.0113]	Need to determine the radiation exposure time to effect timeline	

F3.0 FORWARD WORK

Item #	Forward Work (Topic)	Section/Rqt	Description
1	References to NASA-STD-3001 V1/V2	2.1, 2.2, 3.1.1, 3.2.2, 3.3.12.3, 3.4.2.1, 3.4.2.2, 3.6.5, 3.6.14.1, 3.9.2, 3.9.4, 3.9.5, 3.9.7, 3.9.9, 3.9.14, 3.9.17, 3.9.19	Work with Human Landing System SA representatives to update all references to NASA-STD-3001 V1/V2 to align with the Human Landing System HSR and relative requirement (if HLS generates a document versus direct invoking of standards)
2	Stakeholder Tracking	All	Need to work with Human Landing System SE&I to have this documented put into Human Landing System's MBSE Platform and linked appropriately to other Human Landing System documents. Should be able to track stakeholders for requirements within the database. Not an impact to the document update, separate action to complete with Human Landing System SE&I. This goes to all other stakeholders that are affected disciplines.

DRAFT

Item #	Forward Work (Topic)	Section/Rqt	Description
3	Microgravity EVA Crew-Induced Loads	EVASC.0050	Loads table should be updated with dynamic representation of the loads, similar to NSTS-21000-IDD-ISS to reduce over-conservatism and potential under-conservatism (in the case dynamic coupling). That document defined EVA loads as variable half-sine impulses. Need to carry over the forward work on Loads table from EVA-EXP-0035 (any updates to the table are to be worked through the EVA AIT) – associated with FSR Comment 286 Forward Work on [EVASC.0050] Microgravity Induced Loads Table - The EVA AIT is currently reviewing the Induced Loads Table. Received Comments on EVA-CR-00044 for EVA-EXP-0035, Exploration EVA System Compatibility document that also discussed updates needed to this table (Comments 135, 136, 158, 159), no new work added as covered by this Forward Work Topic– needs to be coordinated through the EVA AIT and ES. Will be worked through the xEVA System Loads Working Group
4	Requirements to address EVA compatibility in partial gravity and surface operations	Global	Currently this document is focused on microgravity environment, forward work for assessment of requirements associated with partial gravity and surface operations.
5	Addressing EVA Orlan suit and Russian hardware compatibility	1.2/Global	Orlan and Russian EVA hardware is currently outside the scope of this document. There will need to be an assessment performed to determine the Orlan suit and Russian EVA hardware's compatibility with each requirement in this document. Once performed, discussion of how to implement in this document will be addressed. Associated with FSR Comments 1395, 1396, 1397, and 1399, 1401.

DRAFT

Item #	Forward Work (Topic)	Section/Rqt	Description
6	Addressing tether point loading	[EVASC.0048] [EVASC.0134]	Concern with designing tether point loading for 1-g weight of item as opposed to on-orbit inertial loading (associated with FSR Comments 284 and 285). Need to discuss within EVA community and any updates to values need to be worked through the EVA Office. Will be worked through the xEVA System Loads Working Group
7	Addressing EVA Fastener Head Tolerance Relaxation	[EVASC.0079]	Numerous exceptions were processed in the ISS Program due to fastener heads not meeting the 12-point inspection. Are the dimensions in 3.7.1.5.2-1 broad enough to not engage in the exception process while in lunar orbit and Human Landing System?
8	Addressing Fastener Torque Measurement	[EVASC.0082]	Concern with test conditions to derive values. FSR DSG-RQMT-001 Comment 290: For fasteners, the "nut factor" is a function of the state of lubrication, and lubricity can be affected by atmospheric versus vacuum conditions. Providing the data for vacuum conditions will be cost prohibitive. The requirement should be explicit in stating the test conditions to derive the values. Also, what are the minimum number of tests/specimens for which to base the values?
9	Addressing requirements between EVA and EVR	All	Need to work any issues through the EVR/EVA Working Group – addresses FSR Comment 1166 (may or may not impact Human Landing System)
10	Determine whether Human Landing System will use current ISS Program APFR or design a new foot restraint and intended range of motion	[EVASC.0040]	Requirement 3.1.7 and 3.4.4 already dictate the use of APFR so why have a requirement on the design of a foot restraint that is something different? Additionally, the CM ROM is not defined anywhere, which will make verifying this requirement difficult. Even if that was defined, what aspect of mobility is intended to be accommodated (i.e. ability to ingress/egress foot restraint or reach envelope once feet are restrained)? Associated with FSR Comment 1398.

DRAFT

Item #	Forward Work (Topic)	Section/Rqt	Description
			Need to determine if impacts Human Landing when docked to in lunar orbit
11	New requirement for Single EVA Crewmember to operate hatch	New	Will consider whether there should be a single shall that states: A single pressurized suited crewmember shall be able to operate the following: Add a table that outlines all scenarios/worksites and have delineate by Programs. Would include incapacitated crew, open hatch, close hatch, etc.
12	Soft Dock Force Table	3.3.6.5-1	The soft dock force table needs to be updated to include the range below 45 lb and update the tolerance.

DRAFT

APPENDIX G
HUMAN LANDING SYSTEM APPLICABILITY MATRIX

Assumptions for Applicability Assessment:

- Human Landing System will not require unique (new) EVA tools, crew aids, or restraints. This type of hardware will be provisioned as GFE.
- Assumed EVA translation only for scenario where the Human Landing System is docked to In lunar orbit or Orion

DRAFT

RQT Section #	Requirement Title	RQT Tag Number	HLS Ascent Module	HLS Descent Module	HLS when docked to in lunar orbit
3.1.1	Translation Path Hardware Protrusion	[EVASC.0001]	A	A	A
3.1.2	Tool Interface Clearance	[EVASC.0002]	A	A	A
3.1.3	Bolt Clearance	[EVASC.0007]	A	A	A
3.1.4	Gloved-Hand Clearance	[EVASC.0003]	A	A	A
3.1.5	Handrail/Handhold Mounting Clearance	[EVASC.0004]	A	A	A
3.1.6	Handrail/Handhold Side Clearance	[EVASC.0005]	A	A	A
3.1.7	APFR EVA Installation/Removal Clearance (when Docked in lunar orbit)	[EVASC.0006]	A	A	A
3.2.1	Continuous EVA Translation Path (when docked to in lunar orbit)	[EVASC.0152]	A	A	A
3.2.2	Translation Path	[EVASC.0008]	A	A	A
3.2.3	Incapacitated Crewmember Interfaces	[EVASC.0154]	A	A	N/A
3.2.4	EVA Contact Hazards Preclusion Beyond Translation Corridor	[EVASC.0010]	A	A	A
3.3.1	EVA Handling Features	[EVASC.0012]	A	A	A
3.3.2	Unpressurized Hatch Transfer Constraint (when Docked in lunar orbit)	[EVASC.0013]	A	A	A
3.3.3	EVA Pressurized Suit Transfer Hatch	[EVASC.0135]	A	A	A

DRAFT

RQT Section #	Requirement Title	RQT Tag Number	HLS Ascent Module	HLS Descent Module	HLS when docked to in lunar orbit
3.3.4	EVA Lunar Hatch Dimensions	[EVASC.0153]	A	A	A
3.3.5	EVA Secondary Ingress/Egress Method	[EVASC.0136]	A	A	A
3.3.6.1	Mounting Alignment Devices	[EVASC.0014]	TBD	TBD	TBD
3.3.6.2	Handling Alignment Marks	[EVASC.0015]	TBD	TBD	TBD
3.3.7.1	Locking Device	[EVASC.0016]	TBD	TBD	TBD
3.3.7.2	Over Center Device Force	[EVASC.0124]	TBD	TBD	TBD
3.3.7.3	Soft Dock or Soft Capture Mechanisms	[EVASC.0017]	TBD	TBD	TBD
3.3.7.4	Soft Capture	[EVASC.0125]	TBD	TBD	TBD
3.3.7.5	Soft Dock Force	[EVASC.0126]	TBD	TBD	TBD
3.3.8	EVA Gloved Hand Compatibility	[EVASC.0021]	A	A	A
3.3.9	Grip Surface	[EVASC.0023]	A	A	A
3.3.10	Unique Labeling	[EVASC.0024]	A	A	A
3.3.11.1	Hand Tool Operations	[EVASC.0025]	TBD	TBD	TBD
3.3.11.2.1	Hand Ratcheting	[EVASC.0135a]	TBD	TBD	TBD
3.3.11.2.2	Throw Angle	[EVASC.0026]	TBD	TBD	TBD
3.3.11.2.3	Ratchet Mechanism	[EVASC.0127]	TBD	TBD	TBD
3.3.11.2.4	Back Drive Torque	[EVASC.0128]	TBD	TBD	TBD
3.3.11.2.5	Running Torque	[EVASC.0129]	TBD	TBD	TBD
3.3.12.1	Pressurized Glove Compatibility	[EVASC.0027]	TBD	TBD	TBD

DRAFT

RQT Section #	Requirement Title	RQT Tag Number	HLS Ascent Module	HLS Descent Module	HLS when docked to in lunar orbit
3.3.12.2	Inadvertent Actuation of EVA - Actuated Controls	[EVASC.0087]	TBD	TBD	TBD
3.3.13.1	Handrail/Handhold Cross-Section	[EVASC.0029]	A	A	A
3.3.13.2	Handrail/Handhold Length	[EVASC.0030]	A	A	A
3.3.13.3	Handrail/Handhold Accessibility	[EVASC.0031]	A	A	A
3.3.13.4	Handrail/Handhold Spacing	[EVASC.0032]	A	A	A
3.3.13.5	EVA Egress Handrail Spacing	[EVASC.0144]	A	A	A
3.3.13.6.1	Optimum Work Envelope – Microgravity (when Docked in lunar orbit)	[EVASC.0035]	TBD	TBD	TBD
3.3.13.6.2	Crew Aids for Stability	[EVASC.0036]	TBD	TBD	TBD
3.3.13.6.3	EVA Worksites Using Robotic Work Platform (when Docked in lunar orbit)	[EVASC.0037]	TBD	TBD	TBD
3.3.13.7.1	Lubricant Use	[EVASC.0038]	A	A	A
3.3.13.7.2	Commonly Implemented EVA Interfaces	[EVASC.0039]	A	A	A
3.4.1	Worksite Mobility	[EVASC.0040]	TBD	TBD	TBD
3.4.2.1	Worksite Field of View	[EVASC.0041]	A	A	A
3.4.2.2	EVA Entrapment	[EVASC.0042]	A	A	A
3.4.3	Worksite Restraints	[EVASC.0044]	TBD	TBD	TBD
3.4.4	Dedicated EVA Worksite	[EVASC.0148]	TBD	TBD	TBD

DRAFT

RQT Section #	Requirement Title	RQT Tag Number	HLS Ascent Module	HLS Descent Module	HLS when docked to in lunar orbit
3.4.5	Robotic Assisted EVA Worksite	[EVASC.0149]	TBD	TBD	TBD
3.4.6	Free-Float Worksites	[EVASC.0150]	TBD	TBD	TBD
3.4.7	Installation of Passive Worksite Interface Sockets	[EVASC.0045]	TBD	TBD	TBD
3.4.8	Foot Restraint Ingress/Egress Aids	[EVASC.0046]	TBD	TBD	TBD
3.4.9	Visual Contrast at Worksite	[EVASC.0047]	A	A	A
3.5.1.1	EVA Handle	[EVASC.0033]	A	A	A
3.5.1.2	EVA Equipment Tether Points	[EVASC.0048]	A	A	A
3.5.1.3	EVA Tether Point Loads	[EVASC.0049]	A	A	A
3.5.1.4	Soft Goods Tether Point Loads	[EVASC.0134]	A	A	A
3.5.2	Microgravity EVA Crew-Induced Loads	[EVASC.0050]	N/A	N/A	A
3.5.3	Partial Gravity EVA Crew-Induced Loads	[EVASC.0155]	A	A	N/A
3.5.4	EVA Actuated Loads	[EVASC.0018]	A	A	A
3.5.5	Handhold/Handrail Torsional Loading	[EVASC.0051]	A	A	A
3.5.6	WIF Structural Loading	[EVASC.0143]	TBD	TBD	TBD
3.6.1	One-Handed EVA Operable Connectors	[EVASC.0053]	TBD	TBD	TBD
3.6.2	Connector Accessibility	[EVASC.0054]	TBD	TBD	TBD

DRAFT

RQT Section #	Requirement Title	RQT Tag Number	HLS Ascent Module	HLS Descent Module	HLS when docked to in lunar orbit
3.6.3	Gloved-Hand Connector Accessibility	[EVASC.0138]	TBD	TBD	TBD
3.6.4	Connector Spacing	[EVASC.0130]	TBD	TBD	TBD
3.6.5	Incorrect Connector Mating Prevention	[EVASC.0055]	TBD	TBD	TBD
3.6.6	Connector Coding	[EVASC.0056]	TBD	TBD	TBD
3.6.7	Connector Protective Caps	[EVASC.0057]	TBD	TBD	TBD
3.6.8	Connector Rotational Travel	[EVASC.0058]	TBD	TBD	TBD
3.6.9	Connector Locking Feature	[EVASC.0059]	TBD	TBD	TBD
3.6.10	Visible Connector Alignment Markings	[EVASC.0060]	TBD	TBD	TBD
3.6.11	Connector Locking Ring	[EVASC.0061]	TBD	TBD	TBD
3.6.12	Connector Mating Status	[EVASC.0062]	TBD	TBD	TBD
3.6.13	Connector Ultimate Load	[EVASC.0064]	TBD	TBD	TBD
3.6.14.1	Mating/Demating of Powered Connectors	[EVASC.0052]	TBD	TBD	TBD
3.6.14.2	Connectors - Electrical Bonding	[EVASC.0065]	TBD	TBD	TBD
3.6.14.3	Scoop-Proof Electrical Connector Design	[EVASC.0066]	TBD	TBD	TBD
3.6.14.4	Connector Grip Point	[EVASC.0063]	TBD	TBD	TBD
3.6.14.5	Connector Disconnection	[EVASC.0139]	TBD	TBD	TBD
3.6.14.6	Arc Containment	[EVASC.0131]	TBD	TBD	TBD
3.6.15.1	Tethering	[EVASC.0132]	TBD	TBD	TBD
3.6.15.2	Venting Feature	[EVASC.0133]	TBD	TBD	TBD

DRAFT

RQT Section #	Requirement Title	RQT Tag Number	HLS Ascent Module	HLS Descent Module	HLS when docked to in lunar orbit
3.6.15.3	Indication of Pressure Flow - Nonbrazed or Nonwelded	[EVASC.0145]	TBD	TBD	TBD
3.6.15.4	Indication of Pressure Flow - Quick Disconnect	[EVASC.0146]	TBD	TBD	TBD
3.7.1.1	Captive Fastener Design	[EVASC.0068]	TBD	TBD	TBD
3.7.1.2.1	Prohibited Locking Methods for Fasteners	[EVASC.0069]	TBD	TBD	TBD
3.7.1.2.2	Securing of Threaded Fasteners	[EVASC.0147]	TBD	TBD	TBD
3.7.1.3.1	One-Handed Fastener Operation	[EVASC.0067]	TBD	TBD	TBD
3.7.1.3.2	Push and Turn Fasteners	[EVASC.0071]	TBD	TBD	TBD
3.7.1.3.3	Scalloped Knobs	[EVASC.0072]	TBD	TBD	TBD
3.7.1.3.4	Knobs Head Diameter and Height	[EVASC.0073]	TBD	TBD	TBD
3.7.1.3.5	EVA Hand-Actuated Fasteners Contingency Operation	[EVASC.0074]	TBD	TBD	TBD
3.7.1.4.1	EVA PIP Pin Grasping Interface	[EVASC.0075]	TBD	TBD	TBD
3.7.1.4.2	PIP Pin Restraint Tether	[EVASC.0076]	TBD	TBD	TBD
3.7.1.4.3	PIP Pin Drive-Out Feature	[EVASC.0077]	TBD	TBD	TBD
3.7.1.5.1	Driver-Type Push Force Tools	[EVASC.0078]	TBD	TBD	TBD
3.7.1.5.2	EVA Fastener Head	[EVASC.0079]	TBD	TBD	TBD
3.7.1.5.3	Fastener Torque Data	[EVASC.0151]	TBD	TBD	TBD

DRAFT

RQT Section #	Requirement Title	RQT Tag Number	HLS Ascent Module	HLS Descent Module	HLS when docked to in lunar orbit
3.7.1.5.4	Power and Hand Tool Operability	[EVASC.0080]	TBD	TBD	TBD
3.7.1.5.5	Fastener Gauge/ Measurement	[EVASC.0141]	TBD	TBD	TBD
3.7.1.5.6	Fastener Torque Measurement	[EVASC.0082]	TBD	TBD	TBD
3.7.1.5.7	Fastener Alignment Features	[EVASC.0083]	TBD	TBD	TBD
3.8.1	Fastener Drive Height	[EVASC.0084]	TBD	TBD	TBD
3.8.2.1	Battery Replacement	[EVASC.0085]	TBD	TBD	TBD
3.8.2.1	Battery Capacity/Voltage Monitoring	[EVASC.0086]	TBD	TBD	TBD
3.8.2.2	Auxiliary Controls	[EVASC.0028]	TBD	TBD	TBD
3.8.3	Common Tools and Fasteners	[EVASC.0088]	A	A	A
3.8.4	Cable Routing/Restraint	[EVASC.0089]	TBD	TBD	TBD
3.8.5	Cable Routing Spacing	[EVASC.0090]	TBD	TBD	TBD
3.8.6	Paint	[EVASC.0091]	A	A	A
3.9.1	Failure Tolerance	[EVASC.0142]	A	A	A
3.9.2	Hazardous Material Contamination Failure Tolerance	[EVASC.0092]	A	A	A
3.9.3.1	Venting or Exposure Compatibility	[EVASC.0093]	A	A	A
3.9.3.2	Deliberate Venting Exclusion	[EVASC.0094]	A	A	A
3.9.4	Emitted Radiation	[EVASC.0095]	A	A	A
3.9.5	Lasers	[EVASC.0096]	A	A	A
3.9.6	Electrical and Safety Design	[EVASC.0097]	A	A	A

DRAFT

RQT Section #	Requirement Title	RQT Tag Number	HLS Ascent Module	HLS Descent Module	HLS when docked to in lunar orbit
3.9.7	Shock Protection	[EVASC.0098]	A	A	A
3.9.8	Operation During Pressure Change	[EVASC.0099]	A	A	A
3.9.9	Component Hazardous Energy Provision	[EVASC.0100]	A	A	A
3.9.10	Detachable Parts	[EVASC.0101]	A	A	A
3.9.11	Touch Temperatures	[EVASC.0103]	A	A	A
3.9.12	Suit Glove Palm External Touch-Temperature Compliance	[EVASC.0011]	A	A	A
3.9.13	Incidental and Continuous Touch Heat Transfer Rates	[EVASC.0104]	A	A	A
3.9.14	Sharp Edge Protection	[EVASC.0105]	A	A	A
3.9.15	Screws and Bolts	[EVASC.0106]	A	A	A
3.9.16	Levers, Cranks, Hooks, and Controls	[EVASC.0107]	A	A	A
3.9.17	Burrs	[EVASC.0108]	A	A	A
3.9.18	Exposed Holes or Slots	[EVASC.0109]	A	A	A
3.9.19	Pinch Hazard Protection	[EVASC.0110]	A	A	A
3.9.20	Entrapment Hazard	[EVASC.0111]	A	A	A
3.9.21	Protection from Moving or Rotating Equipment	[EVASC.0112]	A	A	A
3.9.22	Emergency Ingress Capability	[EVASC.0113]	A	A	A
3.9.23	Connector Cleanliness Level	[EVASC.0114]	TBD	TBD	TBD
3.9.24	External Surface Cleanliness Level	[EVASC.0140]	A	A	A

DRAFT

RQT Section #	Requirement Title	RQT Tag Number	HLS Ascent Module	HLS Descent Module	HLS when docked to in lunar orbit
3.9.25	Tethering / Restraint	[EVASC.0115]	A	A	A
3.9.26	Crew Safety Tether Attachment	[EVASC.0116]	A	A	A
3.9.27	Handhold/Handrail Color	[EVASC.0117]	A	A	A
3.9.28	Manual Overrides	[EVASC.0118]	TBD	TBD	TBD
3.9.29	Hardware Removed/Replaced by EVA	[EVASC.0120]	TBD	TBD	TBD
3.9.30	Entanglement, Cable Clamps, Ducts, or Retractors	[EVASC.0137]	A	A	A
3.10.1	Magnetic Field Limit	[EVASC.0121]	A	A	A
3.10.2	Hardware Compatibility with xEMU Suit EMI	[EVASC.0122]	A	A	A
3.10.3	Voltage Potential Discharge	[EVASC.0123]	A	A	A

DRAFT