ALL DIMENSIONS TYPICAL FOR BOTH BACKWASH FLANGES.

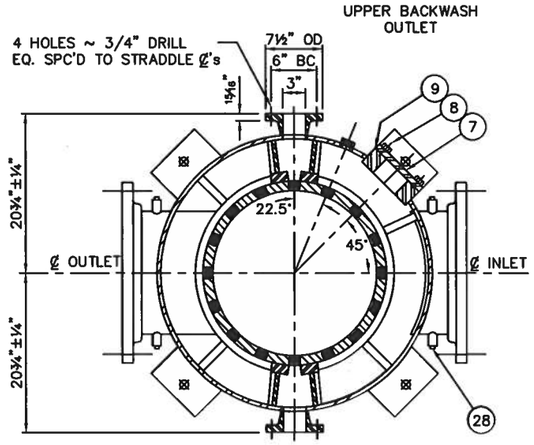

SECTION "B–B"

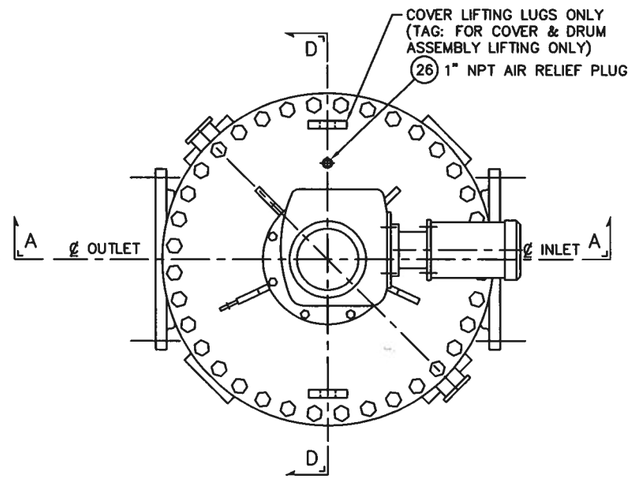

PLAN

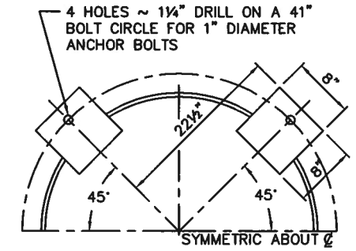

VIEW "C–C"

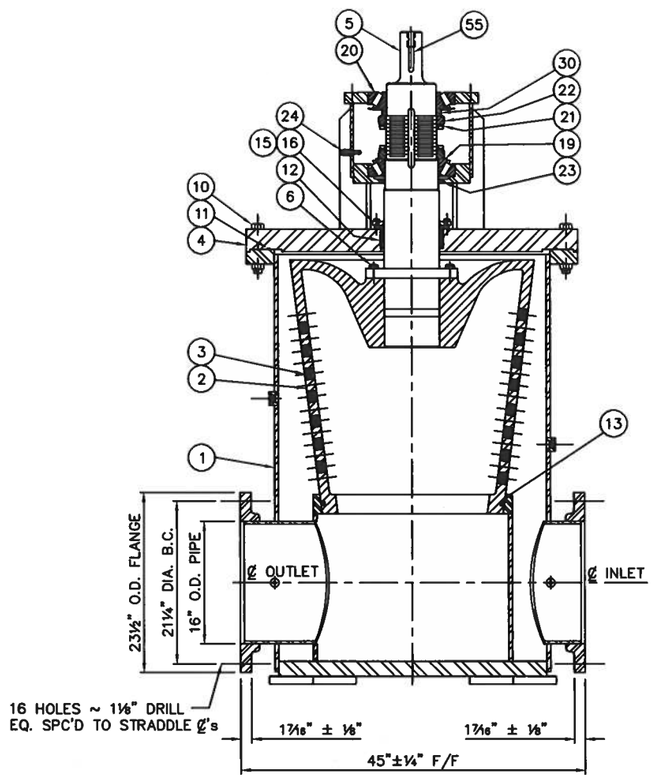

SECTION "A–A"

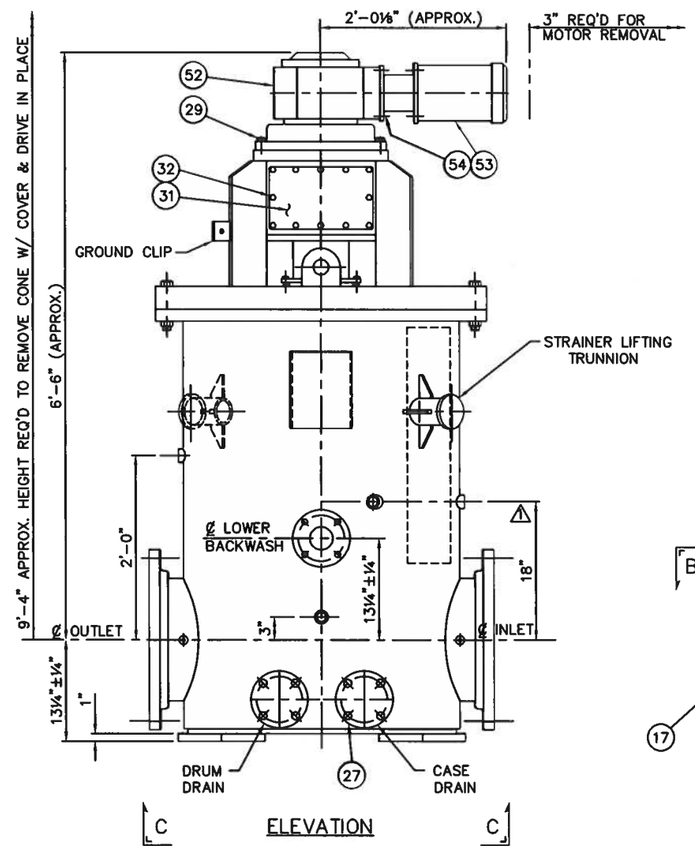

ELEVATION

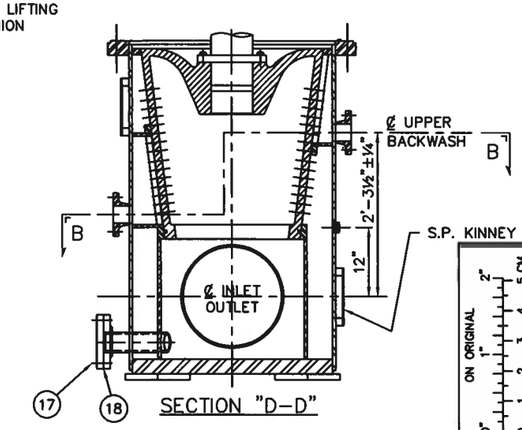

SECTION "D–D"

DESIGNED AND FABRICATED IN ACCORDANCE WITH ASME SECTION VIII DIVISION 1, LATEST EDITION WITH "U" STAMP, NATIONAL BOARD REGISTERED, AND AUTHORIZED INSPECTOR FOR :

OPERATING PRESSURE	80–100 PSIG
MAXIMUM PRESSURE	150 PSIG
DESIGN PRESSURE	150 PSIG
HYDROSTATIC TEST PRESSURE	225 PSIG
CORROSION ALLOWANCE	0.0625 IN.

ALL FLANGES ARE IN ACCORDANCE WITH ANSI B16.5 SPECIFICATIONS

APPROXIMATE WEIGHT OF STRAINER : 7100 LBS. (DRY)
9000 LBS. (WET)

APPROXIMATE CAPACITY OF VESSEL : 225 GALLONS

* – SEE STRAINER CERTIFICATION

NO. REQ'D	ITEM NO.	DESCRIPTION	MATERIAL
1	55	SHAFT KEY	
4	54	MOTOR MOUNTING SCREWS	
1	53	DRIVE MOTOR	
1	52	DRIVE UNIT	
12	32	BONNET COVER RETAINERS	
1	31	BONNET COVER W/GASKET	
1	30	TOP SPACER	
8	29	DRIVE UNIT MOUNTING SCREWS	
4	28	PRESSURE TAP PLUGS	
2	27	DRAIN COVER – 3"	
6	26	AIR RELIEF PLUG	
1	24	GREASE FITTING	
1	23	BOTTOM SEAL	
2	22	LOCKWASHER	
2	21	LOCKNUT	
1	20	UPPER BEARING	
1	19	LOWER BEARING	
2	18	DRAIN COVER GASKET	
8	17	DRAIN COVER RETAINERS	
6	16	GLAND RETAINERS	
1	15	PACKING GLAND	
1	13	DRUM SEAL–RING	
1	12	PACKING	
1	11	COVER "O"–RING	
36	10	STRAINER COVER RETAINERS	
24	9	INSPECTION COVER RETAINERS	
1	8	INSPECTION COVER GASKET	
1	7	INSPECTION COVER	
8	6	SHAFT RETAINERS	
1	5	SHAFT	
1	4	COVER/BONNET ASSEMBLY	
730	3	MEDIA & RETAINER RINGS	
1	2	DRUM	
1	1	STRAINER BODY	

BILL OF MATERIAL

JOB NO. _____ SERIAL NO. _____

THIS DRAWING IS THE PROPERTY OF S.P. KINNEY ENGINEERS INC. AND NO PERMISSION IS GIVEN OR IMPLIED TO REPRODUCE THE SAME OR OTHERWISE PUBLISH IT AND IT MAY NOT BE USED FOR ANY PURPOSE ADVERSE TO THE INTEREST OF S.P. KINNEY ENGINEERS, INC. OR CONTRARY TO THE PURPOSE FOR WHICH IT IS SUPPLIED.

ON ORIGINAL 0" 1" 2" 0 1 2 3 4 5 CM

S.P. KINNEY ENGINEERS, INC.

CARNEGIE, PENNSYLVANIA

REVISION	REVISED BY	CHECKED BY	QA REVIEW

CUSTOMER'S ORDER NO. _____

16" MODEL "A" AUTOMATIC STRAINER
FABRICATED DESIGN WITH SPLIT BACKWASH
GENERAL ARRANGEMENT

	BY	DATE
DRAWN	JMF	11/18/22
CHECKED		
Q.A. REVIEW		

SCALE : 1–1/4" = 1'–0"

SPK–330 REV.

FABRICATION TOLERANCES

LINEAR – ALL TOLERANCES ON LINEAR DIMENSIONS SHALL BE ±1/16 IN. UNLESS OTHERWISE STIPULATED.

ROTATIONAL – ROTATION OF FLANGE TOLERANCE FROM THE INDICATED POSITION SHALL BE 1/16" MAXIMUM UNLESS OTHERWISE STIPULATED.

ALIGNMENT – ALIGNMENT OF FACINGS OR ENDS SHALL NOT EXCEED THAN THE INDICATED POSITION MEASURED ACROSS ANY DIAMETER MORE THAN 3/64" PER FOOT OR 1/32", WHICHEVER IS GREATER.

BOLT CIRCLE DIAMETER TOLERANCE IS ±0.06 IN.

THE CENTER TO CENTER TOLERANCE OF ADJACENT BOLT HOLES IS ±0.03 IN.

DERIVED FROM U–16–30

Atch 2 - Drawings
FA910123QB016