DISTRIBUTION STATEMENT D– DISTRIBUTION AUTHORIZED TO DHS/CG/DOD AND THEIR CONTRACTORS; ADMINISTRATIVE AND OPERATIONAL PURPOSE; <01/01/2009>. OTHER REQUESTS SHALL BE REFERRED TO: COMMANDING OFFICER, USCG SFLC ESD TECHNICAL INFORMATION MANAGEMENT BRANCH, 2401 HAWKINS POINT ROAD, MAIL STOP 25/STINFO PROJECT MANAGER, BALTIMORE, MD 21226-5000.
WARNING–THIS DOCUMENT CONTAINS TECHNICAL DATA WHOSE EXPORT IS RESTRICTED BY THE ARMS EXPORT-CONTROL ACT (TITLE 22, U.S.C. SEC 2751, ET. SEQ.) OR THE EXPORT ADMINISTRATION ACT OF 1979, AS AMENDED, TITLE 50, U.S.C. APP 2401 ET. SEQ. VIOLATIONS OF THESE EXPORT LAWS ARE SUBJECT TO SEVERE CRIMINAL PENALTIES.
DESTRUCTION NOTICE–FOR UNCLASSIFIED, LIMITED DOCUMENTS, DESTROY BY ANY METHOD THAT WILL PREVENT DISCLOSURE OF CONTENTS OR RECONSTRUCTION OF THE DOCUMENT.

REVISIONS

| ZONE | REV | DESCRIPTION | DATE | APPROVED |
|---|---|---|---|---|
| | | (CONT) | | |
| | B | 4. SHT 4; DECREASED QTY OF P/N 20 FROM 3 TO 1; ADDED P/N 22.<br>5. SHT 5; CHANGED P/N & DESCRIPTION TO REFLECT 1 1/2" PLATE.<br>6. SHT 6; CHANGE LCTN OFF CL FOR THE FOLLOWING DOORS: FN'S 1 & 2 TO 6'–8"(P), FN 3 TO 20"(P), FN 4 TO 40"(P); FN'S 1 & 2, CHANGE DOOR PN TO 22; FN 2, CHANGE INSTALL ON MODULE TO 920; ADDED NEW F/N 9.<br>7. SHT 8; FN'S 41 & 47, CHANGE INSTALL DETAIL TO 15–B; FN 46, CHANGE LCTN FROM FRAME TO 10" AFT FRAME 54; FN 50, CHANGE LCTN FROM FRAME TO 13" AFT FRAME 76.<br>8. SHT 10; ADDED LIST OF MANHOLES<br>9. SHT 12; ADD DETAIL FOR 15" X 18" RING. CHANGE PL SIZE TO 1 1/2". | 12-21-94 | M.REFVEM |
| SHT 1<br>ALL<br>SHT 1<br>SHT 3<br>SHT 4<br>SHT 6<br>SHT 6<br>SHT 8<br>SHT 8<br>SHT 10<br>SHT 12<br>SHT 15<br>SHT 10<br>SHT 5A<br>17<br>SHT 14<br>SHT 6<br>SHT 13<br>SHT 8<br>SHT 10<br>SHT 8<br>SHT 3 | C | 1. ADDED REF #2 (CRANE PED VENDOR DWG.<br>2. REVISED DWG THROUGH–OUT TO UPDATE DWG FORMAT.<br>3. REMOVED RESERVATION #1.<br>4. UPDATED FIND #12 THRU 17 TO REV C.<br>5. ADD STANDARD P/N FOR PART LIST #33.<br>6. FIND #9, DELETED DOOR PER MMC ENC #0201–930–01–13. SEE REF #3.<br>7. FIND #2 & 3, CHG LOCATION OF DOORS<br>8. FIND #50, CHG DIRECTION OF SCUTTLE (INBD HULL 551 ONLY).<br>9. FIND #52, UPDATED LOCATION (HULL 551 ONLY WAS 5" FWD FR 80).<br>10. FIND # 90 AND 91, DELETED MANHOLES. ADDED FIND # 109, 110, 92, 82. FIND #107 & 111 WAS ADDED FOR HULLS 552 THRU 564. ADDED LOCATION FOR FIND #97 & #105.<br>11. CHG CUT–OUT SIZE FOR FLUSH MANHOLE (WAS 10 1/2"R).<br>12. P/N 5 LETTER C, CHG RAD (WAS 7 3/4")<br>13. FIND #105 CHANGE DAY TK TO RSDOT, (WAS FLOT), INCORP MMC ECN #0201–167–01–1.<br>14. ADDED ACCESS TO UPTAKE. ADDED SHT'S 5A, AND SHT 17. INCORP MMC ECN # 0201–167–01–2.<br>15. ADDED CALL–OUT P/N 41.<br>16. UPDATED LOCATION OF FIND #4, (WAS STBD).<br>17. ADD SUB CALL–OUTS FOR MANHOLE RINGS AND COVERS.<br>18. FIND #46, CHG LOCATION TO, (WAS STBD)<br>19. SHT 10, FIND 108, ADDED CLOVER PL FOR CRANE PEDESTAL (SEE REF #2.)<br>20. ADDED FIND #60 PER CARGO HATCH.<br><br>REASONS:<br>(1–16) 1. DESIGN DEV.<br>(17–20) 2. INCORP USCG LETTER 167–QA–M1434 OF 13 JUNE 94 | 10/02/95 | M.REFVEM |

REVISIONS CONTINUED ON SHEET 2

# GENERAL NOTES

C 2

1. SCUTTLES SHALL HAVE A SELF LOCKING HOLD OPEN BRACE BUILT INTO HINGES IAW NAVSEA 803–1623943. EXTERIOR HATCHES AND SCUTTLES WILL HAVE SELF LOCKING HOLD OPEN BRACES AND THE VESSEL'S DAMAGE CONTROL CLASSIFICATION SHALL REQUIRE THESE HATCHES AND SCUTTLES TO BE CLOSED WHILE THE VESSEL IS AT SEA.
2. UNLESS NOTED, HATCH COAMINGS IN INTERIOR SPACES ARE 6", AND 12" IN EXTERIOR SPACES.
3. KNIFE EDGES, HINGES, AND SCUTTLE HANDWHEELS SHALL BE CORROSION RESISTANT STEEL.
4. NEOPRENE GASKETS SHALL BE IAW MIL–R–900F.
5. RAISED HATCH AND SCUTTLE COAMINGS SHALL BE PARALLEL TO BASELINE.
6. TANKS AND VOIDS OF GREATER THAN 1000 CUBIC FEET SHALL BE SUPPLIED WITH 2 MANHOLE ACCESSES, WIDELY SEPARATED.

E 2

7. DOOR SILLS ARE 9" ABOVE DECK UNLESS NOTED.
8. LOCATE DOOR HOOKS & STAPLES, P/N'S 44 & 44A, TO SUIT SURROUNDING STRUCTURE AT INSTALLATION.

# RESERVATIONS

C 3 ~~1. DOOR NO, SCUTTLE OR HATCH NO (SHTS 6, 7, 8, 9) RESERVED PENDING FINAL DESIGN REVIEW.~~

B 1 ~~2. LIST OF MANHOLES, RESERVED PENDING DETAIL DEVELOPMENT.~~

D 4
D 10
C 6
C 19

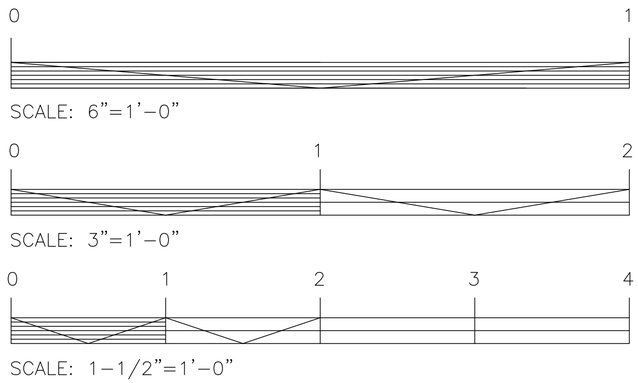


REVISIONS

| ZONE | REV | DESCRIPTION | DATE | APPROVED |
|---|---|---|---|---|
| | – | ORIGINAL ISSUE | 4-21-94 | B. FALLON |
| | A | 1. SHEET 3; DECR QTY P/N 2 (WAS 2) INCR QTY P/N 9 (WAS 1).<br>2. SHEET 6; DEL FN 9; FN 11, CHG COMPT ACCESS (WAS 1–6–2–Q) AND LOC OFF CL (WAS 5'–0"); FN 12, CHG COMPT ACCESS (WAS 1–6–1–Q) AND LOC OFF CL (WAS 5'–0").<br>3. SHEET 8; FN 41, CHG COMPT ACCESS (WAS 1–6–2–Q, BOATSWAIN STRM); ADD FN 54; FN 53, DEL COMPT NAME.<br>4. SHEET 7; F/N 35, CHANGE CLEAR OPENING (WAS 26 X 66).<br>5. SHEET 8; F/N 56, CHG LOC FROM FRAME (WAS 8" AFT FR 9).<br>REASON: ITEMS 1, 2, & 3 PER DESIGN DEVELOPMENT.<br>–ITEMS 1 THROUGH 5 INCORPORATE ABS DRAWING COMMENTS LTR DTD 13 JUNE 1994. | 7-20-94 | RMR |
| | B | 1. SHT 1; REVISED TO SUIT.<br>2. NOT USED.<br>3. SHT 3; ADDED VENDOR FOR P/N 1; INCR QTY OF P/N 14 FROM 1 TO 2.<br>---CONTINUED IN BLOCK 4–D | | |

| NO. | TITLE | USCG DWG NO | MMC DWG NO |
|---|---|---|---|
| 5 | LIFELINES, LIFERAILS & STAN | 612–001 | 612–01 |
| 4 | MASTS, A & D | 170–001 | 170–01 |
| 3 | JOINER DOOR SHEDULE | 624–001 | 624–01 |
| 2 | CRANE PED VENDOR DWG | | |
| 1 | GENERAL ARR. | 601–001 | 601–01 |

REFERENCES

**MARINETTE MARINE CORPORATION**
MARINETTE WISCONSIN 54143

CONTRACT NO. DTCG23–93–C–AWL201

MARINETTE MARINE CORP.
MARINETTE WIS. 54143

MMC DWG NO. 0201–167–01
APVD: WJF 4–21–94
APVD: LSC 4–20–94
CHKD: GTJ 4–20–94
DWN: BSW 3–1–94
USCG APPRV: 085–QA–M4842 DATE: 7/8/98
ABS APPRV: CJW DATE: 13 JUNE 1994

U.S. COAST GUARD HEADQUARTERS
WASHINGTON, D.C. 20593

TITLE SEAGOING BUOY TENDER (WLM)

STRUCTURAL CLOSURES

SIZE C | FSCM 81340 | DRAWING NO. 175–WLM–167–001 | REV L
SCALE: AS NOTED | SHEET 1 OF 17

DWG. NO. 175–WLM–167–001 SH 1 REV L

ELIN 085–1.1

# INDEX


| SHT NO. | DESCRIPTION | REV STATUS |
|---|---|---|
| 1 | TITLE SHEET, RESERVATIONS, GENERAL NOTES | L |
| 2,2A | INDEX | L(2),L(2A) |
| 3 | PARTS LIST | L |
| 4 | PARTS LIST | H |
| 5,5A | PARTS LIST | H(5),G(5A) |
| 6 | STRUCTURAL DOOR LIST | E |
| 7 | STRUCTURAL DOOR LIST | E |
| 8 | HATCH/SCUTTLE LIST | J |
| 9 | HATCH/SCUTTLE LIST | E |
| 10 | MANHOLE LIST | H |
| 11 | MANHOLE LIST | E |
| 12 | FLUSH MANHOLE DETAILS | E |
| 13 | RAISED MANHOLE DETAILS | E |
| 14 | MISCELLANEOUS DETAILS | F |
| 15 | DOOR & HATCH CUTOUT DETAILS | E |
| 16 | SCUTTLE CUTOUT DETAILS | E |
| 17 | UPTAKE CLOSURE PLATE DETAILS | G |


## REVISIONS

| ZONE | REV | DESCRIPTION | DATE | APPROVED |
|---|---|---|---|---|
| SHT 3 | E | 1. ADD P/N 167-01-5A, SPRING ASSISTED HATCH FOR HULLS 555 & FOL. P/N 167-01-5 FOR HULLS 551 THRU 554.<br>-INCORP MMC ECN #0201-167-01-6 & CLASS I ECP #23. | | |
| SHT 5<br>SHT 5A | | 2. ADD 5/8" DIA BOLT, P/N 55. ADD STAPLE, P/N 167-01-44A. MODIFY GENERAL #8. ADD NOTE TO SCRAP STAPLE & REPLACE WITH P/N 44A.<br>-INCORP MMC FCN #2030. | | |
| SHT 6 | | 3. F/N 3 & 4; ADD FIXED LIGHT. F/N 15; ADD NOTE LH & IF INSTALLED HULL 554. | | |
| SHT 17 | | 4. DET 17-A; CHG TO SKIP WELD. DET 17-M; ADD SUB-ASSY NO. S03 TO MAIN DECK UPTAKE ACCESS CLOSURE PL. | | |
| SHT 2 | | 5. REV D-5; CHG TO READ P/N 126 TO UPTAKE CLOSURE PL (WAS P/N 124). REV D-9; DEL ZONE SHT 1. REV D-10; ADD ZONE SHT 1. | | |
| SHT 17 | | 6. DET 17-A; CHG NOTE TO READ HULLS 551-553 ONLY (WAS HULLS 1, 2 & 3 ONLY). DET'S 17-M & 17-N; CHG TO READ HULLS 554 & FOL (WAS HULLS 4 & FOL). | | |
| SHT 10 | | 7. F/N 86 & 97; CHG TO P TO S (WAS F TO AFT). F/N 88 & 89; CHG TO 10" AFT FR 28 (WAS 10" FWD FR 28).<br>F/N 93; CHG COMPT (WAS 2-52-1-A ELEC STRM TO BLW).<br>F/N 94; ADD NOTE FOR COVER P/N 114 & BOLT WITH P/N 35 & 55.<br>F/N 95; ADD NOTE HULL 551 FLOT.<br>F/N 98 & 99; CHG LOC (WAS 10" FWD FR 83), ADD NOTE HULL 551 FLOT.<br>F/N 107; CHG COMPT (WAS ELEC STRM TO BLW), ADD NOTE HULLS 552 & FOL.<br>F/N 111; CHG LOC (WAS 14'-9" (P) & 9' 3 5/8" ABL.<br>ADD F/N 113. | | |
| SHT 7 | | 8. F/N 21; ADD FIXED LIGHT.<br>F/N 25; ADD WATERSHED.<br>F/N 28, 29, 32 & 33; ADD FIXED LIGHT & NOTE FOR NO FIXED LIGHT HULLS 554 & FOL.<br>F/N 35; ADD NOTE FOR NO FIXED LIGHT HULLS 554 & FOL. | | |
| SHT 3<br>SHT 8 | | 9. P/N 6 & 7 AND F/N 43, 44, 55 & 56; DEL TOGGLE PIN LOCK.<br>P/N 7 AND F/N 43 & 55; ADD HASP & STAPLE.<br>-ITEMS 1-4 & 7-9 INCORP MMC DESIGN DEVELOPMENT.<br>-ITEMS 6 & 7 INCORP USCG LTR 167-QA-M4363 DTD 24 APR 1997. | 10/21/97 | C. JACKSON mda |
| SHT 4,17<br>SHT 10<br>SHT 14 | F | 1. DET 17-M; DEL P/N'S 26, 27 & 28. REDUCE QTY P/N 117 (WAS 2 FOR HULLS 554 & FOL). DEL DET 17-N & P/N 125 (4 PLCS).<br>2. F/N'S 100 & 101; CHG TO 7'-7" OFF CL P/S FOR HULLS 557 & FOL (7'-6" P/S FOR HULLS 551-556).<br>3. ADD P/N 65C & DET 14-G, DECK SOCKET WRENCH STOWAGE.<br>-INCORP MMC DESIGN HISTORY #655. | 2/11/98 | C.JACKSON/MDA |
| SHT 17<br>SHT 4,5<br>SHT 10<br>SHT 3,4 5,5A | G | 1. REINSTATED DETAIL 17-N & ADDED DETAIL 17-P TO SHOW HULL 551 ARRANGEMENT.<br>2. NOTED QTYS REQD FOR P/N'S 31, 32, 40, & 45 ON PARTS LIST.<br>3. CORRECTED ERROR ON SHT 10 TABLE. FIND NO. 94 CALLED OUT P/N 32, CHANGED TO P/N 45.<br>4. ADDED MMC STANDARD PART NOS. THROUGHOUT PARTS LIST.<br>-ITEM 1 PER USCG LTR 167-W-M4757 DTD 26 MAR 1998. | 6/3/98 | C.JACKSON/jh |
| SHT 4<br>SHT 5<br>SHT 10 | H | 1. SHT 4, P/N 30 MARKED AS INVENTORY STOCK<br>2. SHT 5, P/N 44 QTY 25 WAS 29<br>3. SHT 10, MANHOLE FIND NO.94, "USE COVER P/N 104 W/O COUNTERSINK & W/ P/N'S 35,55" WAS "USE COVER P/N 114 BOLT W/ PN 35,55"<br>REASON: DWG CORRECTIONS | 9/17/98 | C.JACKSON/lmv |
| SHT 3<br>SHT 3<br>SHT 3<br>SHT 8 | J | 1. IN PARTS LIST DELETED P/N 5.<br>2. IN PARTS LIST REVISED DESCRIPTIONS OF P/N'S 5A & 6.<br>3. IN PARTS LIST REVISED REMARKS COLUMN OF P/N 5A.<br>4. IN LIST OF HATCHES & SCUTTLES, ADDED SCUTTLES AND HATCH NOS. FOR FIND NOS. 41, 44, 47, 53, 54 & 56. ABOVE TO SUIT INSTALLATION OF SCBA'S. | J. HARWELL /S/ | 2/22/12 F. DeBORD /S/ |

REVISIONS CONTINUED ON SHEET 2A

## REVISIONS

| ZONE | REV | DESCRIPTION | DATE | APPROVED |
|---|---|---|---|---|
| SHT 6 | D | 1. MOVED WT DOOR (FIND #6) 1" TO PORT (WAS 1'-8"(S)) IWO HINGE INTERFERENCE WITH LONG BHD 40" OFF CL (S).<br>-INCORP MMC FCN #143. | | |
| SHT 14<br>SHT 5A | | 2. DET 14-D; REVISED RAISED MANHOLE WRENCH STOWAGE, DEL P/N'S 109 & 110, ADD P/N 66A. DET 14-E; REVISED FLUSH MANHOLE WRENCH STOWAGE, DEL P/N 111, ADD P/N 65B. ADDED DET 14-F FOR SCUTTLE WRENCH STOWAGE, ADDED P/N 65A. ADDED P/N 66 TO PARTS LIST.<br>-INCORP MMC ECN #0201-167-01-3. | | |
| SHT 17 | | 3. DETAILS 17-E & 17J; ADDED NOTE TO TACK WELD NUT, P/N 47, TO BOLTING RINGS, P/N'S 118 & 120.<br>-INCORP MMC ECN #0201-167-01-5. | | |
| SHT 4<br>SHT 11<br>SHT 1 | | 4. ADDED WRENCH STOWAGE FOR RAISED WT HATCHES (4 PLCS). ADDED P/N'S 23, 24, 25 & 130. UPDATED PARTS LIST TO SUIT. ADDED REF 5.<br>-INCORP MMC ECN #0201-167-01-5. | | |
| SHT 17<br>SHT 4 | | 5. DET 17-A; ADDED INSULATION STOP COAMING, P/N 126 TO UPTAKE CLOSURE PL, P/N 115. ADDED DETAILS 17-M & 17-N. CHANGED HANDLES, P/N 117 FROM WELDED TO BOLTED. ADDED P/N'S 26, 27, 28 & 125. INCREASE QTY P/N 117 FROM 1 TO 2.<br>-INCORP MMC FCN #326. | | |
| SHT 10 | | 6. LIST OF MANHOLES;<br>-FIND #92; CHG TO RSDWT, CHG TO 4'-10 1/2" LVL, CHG TO SHT 13.<br>-FIND #94; CHG TO FLWT (WAS FLOT).<br>-FIND #105; CHG TO FUEL SERVICE TK (WAS EMGEN DAY TK).<br>-INCORP MMC FCN #978. | | |
| SHT 16 | | 7. DET 16-A; CHANGED DIM IN DECK CUT-OUT (WAS 17"). | | |
| SHT 16 | | 8. ADDED DET 16-D. RAISED SCUTTLES (FIND #'S 46, 50 & 52) TO ACCOMODATE MAIN DECK COVERING.<br>-INCORP MMC FCN #367. | | |
| SHT 16 | | 9. P/N'S 7 & 9; CHANGED "B" DIM (WAS 23 1/2" & 20 1/2"), CHANGED "E" DIM (WAS 21 1/2" & 18 1/2"). | | |
| SHT 1<br>SHT 9 | | 10. ADDED FIND #61, HATCH FOR MAIN MAST. ADDED REF 4. | | |
| SHT 8 | | 11. FIND #41; COMPT (WAS 1-6-0-Q BOATSWAIN STRM). | | |
| SHT 8<br>SHT 10 | | 12. FIND #55; CHG COMPT ACCESS (WAS 3-79-0-E PUMP RM).<br>FIND #109; CHG COMPT (WAS 3-80-0-E PROPULSION THRUSTER RM).<br>-ITEMS 1 THRU 11 INCORP PER MMC DESIGN DEVELOPMENT.<br>-ITEM 12 INCORP USCG LTR 167-QA-M2653 DTD 8 NOV 1995. | 4-4-97 | C. JACKSON |

MMC DWG NO: 0201-167-01
USCG APPRV: DATE:
ABS APPRV: DATE:

| SIZE | FSCM | DRAWING NO. | REV. |
|---|---|---|---|
| C | 81340 | 175-WLM-167-001 | L |

SCALE AS NOTED 2 OF 17

DWG. NO. 175-WLM-167-001 SH 2 REV. L

REVISIONS

| ZONE | REV | DESCRIPTION | DATE | APPROVED |
|---|---|---|---|---|
| SHT 3<br>SHT 2A | K | 1. REVISED DESCRIPTION FOR P/N 6; DELETED MMC STD P/N; CHANGED NAVSEA DWG FOR FOR THE SCUTTLE.<br>2. ADDED SHEET 2A. | 03-14-12 | JMB/PIF |
| SHT 3<br>↓<br>SHTS 2,2A | L | DRAWING REVISED PER ACTIVITY 53938 "WLM-175 REFERENCE DISCREPANCY".<br>1. IN PARTS LIST REVISED DESCRIPTIONS OF P/N 5A & 6.<br>2. IN PARTS LIST REVISED REMARKS COLUMN OF P/N#s 5A & 6.<br>3. IN PARTS LIST REVISED REMARKS COLUMN OF P/N#s 12 TO 17.<br>4. CHANGED REV STATUS | 07-17-14 | JJR/PIF |

| SIZE | FSCM | DRAWING NO. | REV. |
|---|---|---|---|
| C | 81340 | 175-WLM-167-001 | L |
| SCALE NONE | | SHEET 2A OF 17 | |

DWG. NO. 175-WLM-167-001 SH 2A REV L

K 2

# PARTS LIST

QUANTITES ARE FOR ONE SHIP

G 4

| P/N | MMC STD. P/N | U/M | QTY. | DESCRIPTION | MATERIAL OR VENDOR | SPEC.,GRADE OR MODEL | UNIT WEIGHT | REMARKS |
|---|---|---|---|---|---|---|---|---|
| 1 | 0216701-1 | EA | 1 | HATCH, CARGO, 72" X 72" FL, WT, POWER OPERATED | STEEL, WALZ & KRENZER INC | | | ASB GR A (HULL 551 ONLY)<br>ASB GR AH-36 (HULL 552 THRU 564) C 20 B 3 |
| 2 | 0216701-2 | EA | 1 | DOOR - 26" X 66" C.O., WT, QA, RH, 10 DOG W/O HASP AND STAPLE, W/O FIXED LIGHT LOW TYPE CRES HINGES | STEEL | | | IAW NAVSEA DWG 805-1400050 A 1 |
| 3 | 0216701-3 | EA | 3 | DOOR - 26" X 66" C.O., WT, QA, RH, 10 DOG W/O HASP AND STAPLE, W/ FIXED LIGHT LOW TYPE CRES HINGES | STEEL | | | IAW NAVSEA DWG 805-1400050 |
| 4 | 0216701-4 | EA | 1 | DOOR - 30" X 66" C.O., WT, QA, RH, 10 DOG W/O HASP AND STAPLE, W/ FIXED LIGHT LOW TYPE CRES HINGES | STEEL | | | IAW NAVSEA DWG 805-1400050 EXCEPT FOR DOOR WIDTH |
| 5 | ~~0216701-5~~ | ~~EA~~ | ~~2~~ | ~~HATCH - 30" X 60" C.O. RSD, WT, INDV DOGGED, WITH A 18" DIA. C.O., FL, QA, WT, SCUTTLE~~ | ~~STEEL~~ | | | ~~HATCH - IAW NAVSEA DWG 805-1624079~~<br>~~SCUTTLE - IAW NAVSEA DWG 805-1623054~~ ~~(FOR HULLS 551 THRU 554)~~ E 1 J 1<br>~~HATCH COAMING 6" HEIGHT~~ |
| 5A | 0216701-5A | EA | 2 | HATCH, WITH SPRING ASSISTED MECHANISM - 30" X 60" C.O. RSD, WT, ~~INDV DOGGED W/11~~ W/12 INDV. DOGS, WITH A ~~18"~~ 21"DIA. C.O., FL, QA, WT, SCUTTLE | STEEL | | | HATCH - IAW NAVSEA DWG 805-~~1624079~~ 1645438 ~~(FOR HULLS 555 & FOL)~~<br>SCUTTLE - IAW NAVSEA DWG ~~805~~ 803-1623056 (FOR ALL HULLS) J 2 J 3 L 1,2<br>HATCH COAMING 6" HEIGHT |
| 6 | ~~0216701-6~~ | EA | 2 | HATCH - 30" X 30" C.O. RSD, WT, ~~INDV DOGGED~~ W/10 INDV. DOGS, WITH A ~~18"~~ 21"DIA C.O., ~~FL,~~ QA, WT, SCUTTLE. ~~HATCH WILL BE FURNISHED WITH HASP & STAPLE.~~ | STEEL | | | HATCH - IAW NAVSEA DWG 805-~~1624093~~ 1624092<br>SCUTTLE - IAW NAVSEA DWG ~~805-1623054~~ 803-1401892 K 1 J 2 E 9 L 1,2<br>HATCH COAMING 12" HEIGHT |
| 7 | 0216701-7 | EA | 2 | SCUTTLE - 21" DIA C.O., RSD, QA, WT. SCUTTLE WILL BE FURNISHED WITH HASP & STAPLE. | STEEL | | | IAW NAVSEA DWG 803-1401892<br>SCUTTLE COAMING 12" HEIGHT |
| 8 | 0216701-8 | EA | 3 | SCUTTLE - 21" DIA C.O., FL, QA, WT, | STEEL | | | IAW NAVSEA DWG 803-1623056<br>TOGGLE PIN LOCKING DEVICE ON UNDERSIDE |
| 9 | 0216701-9 | EA | 2 | SCUTTLE - 18" DIA C.O., RSD, QA, WT, W/ INTERNAL TOGGLE PIN LOCK ON SCUTTLE | STEEL | | | IAW NAVSEA DWG 803-1401890<br>SCUTTLE COAMING 12" HEIGHT A 1 |
| 10 | 0216701-10 | EA | 1 | DOOR - 26" X 66" C.O., WT, QA, RH, 10 DOG W/ HASP AND STAPLE, W/O FIXED LIGHT LOW TYPE CRES HINGES | STEEL | | | IAW NAVSEA DWG 805-1400050 |
| 11 | 0216701-11 | EA | 1 | DOOR - 26" X 66" C.O., WT, QA, LH, 10 DOG W/ HASP AND STAPLE, W/O FIXED LIGHT LOW TYPE CRES HINGES | STEEL | | | IAW NAVSEA DWG 805-1400050 |
| 12 | 0216701-12 | EA | 2 | DOOR - 26" X 66" C.O., WEAT, RH W/ HASP AND STAPLE W/ 14" X 18" FIXED LIGHT | STEEL | | | IAW USCG DWG ~~FL-1602-48, REV C~~ (OBSOLETE) C 4 L 3<br>FL-1602-89 |
| 13 | 0216701-13 | EA | 2 | DOOR - 26" X 66" C.O., WEAT, LH W/ HASP AND STAPLE W/ 14" X 18" FIXED LIGHT | STEEL | | | IAW USCG DWG ~~FL-1602-48, REV C~~ (OBSOLETE)<br>FL-1602-89 |
| 14 | 0216701-14 | EA | 2 | DOOR - 26" X 66" C.O., WEAT, RH W/ HASP AND STAPLE AND 9" DIA FIXED LIGHT | STEEL | | | IAW USCG DWG ~~FL-1602-48, REV C~~ (OBSOLETE)<br>FL-1602-89 B 3 |
| 15 | 0216701-15 | EA | 1 | DOOR - 26" X 66" C.O., WEAT, LH W/ HASP AND STAPLE AND FIXED LIGHT | STEEL | | | IAW USCG DWG ~~FL-1602-48, REV C~~ (OBSOLETE)<br>FL-1602-89 |
| 16 | 0216701-16 | EA | 2 | DOOR - 26" X 66" C.O., WEAT, RH W/ HASP AND STAPLE, W/O FIXED LIGHT | STEEL | | | IAW USCG DWG ~~FL-1602-48, REV C~~ (OBSOLETE)<br>FL-1602-89 |
| 17 | 0216701-17 | EA | 3 | DOOR - 26" X 66" C.O., WEAT, LH W/ HASP AND STAPLE, W/O FIXED LIGHT | STEEL | | | IAW USCG DWG ~~FL-1602-48, REV C~~ (OBSOLETE)<br>FL-1602-89 |

C 2

| | | | |
|---|---|---|---|
| MMC DWG NO: | | | |
| USCG APPRV: | DATE: | SIZE C | FSCM 81340 | DRAWING NO. 175-WLM-167-001 | REV. L |
| ABS APPRV: | DATE: | SCALE AS NOTED | 3 OF 17 |

DWG. NO. 175-WLM-167-001 SH 3 REV L

# PARTS LIST

QUANTITES ARE FOR ONE SHIP

G 4

| P/N | MMC STD. P/N | U/M | QTY. | DESCRIPTION | MATERIAL OR VENDOR | SPEC.,GRADE OR MODEL | UNIT WEIGHT | REMARKS |
|---|---|---|---|---|---|---|---|---|
| 18 | 0216701-18 | EA | 1 | DOOR - 30" X 66" C.O., WT, QA, RH, 10 DOG W/ HASP AND STAPLE W/ FIXED LIGHT LOW TYPE CRES HINGES | STEEL | | | IAW NAVSEA DWG 805-1400050 EXCEPT FOR DOOR WIDTH |
| 19 | 0216701-19 | EA | 2 | MANHOLE-15" X 23" C.O. WT, HINGED . | STEEL | | | IAW BUREAU OF SHIPS DWG S1602-860100; COAMING 6" HIGH |
| 20 | 0216701-20 | EA | 1 | DOOR - 30" X 66" C.O., WT, QA, LH, 10 DOG W/O HASP AND STAPLE, W/O FIXED LIGHT LOW TYPE CRES HINGES | STEEL | | | IAW NAVSEA DWG 805-1400050 EXCEPT FOR DOOR WIDTH B 4 |
| 21 | 0216701-21 | EA | 2 | DOOR - 26" X 66" C.O., WT, QA, LH, 10 DOG W/O HASP AND STAPLE, W/O FIXED LIGHT LOW TYPE CRES HINGES | STEEL | | | IAW NAVSEA DWG 805-1400050 . |
| 22 | 0216701-22 | EA | 2 | DOOR - 30" X 66" C.O., WT, QA, RH, 10 DOG W/O HASP AND STAPLE, W/O FIXED LIGHT LOW TYPE CRES HINGES | STEEL | | | IAW NAVSEA DWG 805-1400050 EXCEPT FOR DOOR WIDTH B 4 |
| 23 | 0216701-23 | EA | 4 | WRENCH, ENGINEERS, 1 5/16" | STEEL | | | RAILWAY SPECIALTIES 4072-91 FOR RAISED HATCHES D 4 |
| 24 | 0216701-24 | EA | 4 | CLIP, UPPER | | | | RAILWAY SPECIALTIES 4072-92 |
| 25 | 0216701-25 | EA | 4 | CLIP, LOWER | | | | RAILWAY SPECIALTIES 4072-93 |
| 26 | | | | NOT USED | | | | F 1 D 5 |
| 27 | | | | NOT USED | | | | |
| 28 | | | | NOT USED | | | | |
| 29 | | | | NOT USED | | | | |
| 30 | *71631-001 | EA | 200 | MACHINE SCREWS, 5/8-11UNC-2A, FLATHEAD, 1-1/4" LG HEXAGONAL DRIVE SOCKET, 80° COUNTERSUNK HEAD | STEEL | ASTM A307 GRADE 2 | | ZINC PLATED (1088) FLUSH MANHOLES H 1 |
| 31 | 61002-001 | EA | 9 | GASKET 1/8" THK NEOPRENE IAW HH-P-151, CL 2, 45 DUROMETER HARDNESS ±5, W/ CLOTH INSERT | NEOPRENE | | | FABRICATED IAW SKETCH MMC STD PN SHEET 61002 W/ 11/16" DIA HOLES 28 PLACES G 2 |
| 32 | 81006-001 | EA | 10 | GASKET 1/8" THK VEGETABLE FIBER FOR 15" X 23" C.O. MANHOLE | VEGETABLE FIBER | | | FABRICATED IAW SKETCH MMC STD PN SHEET 61002 W/ 11/16" DIA HOLES 28 PLACES G 2 |
| 33 | 71630-001 | EA | | STUD 5/8" X 2-5/16" OVERALL LENGTH W/ 5/8"-11 UNC-2A X 1-3/8" THD LGTH NUT END 5/8" MIN FULL THD LGTH ON TAP END | STEEL | ASTM A307 GRADE 2 | | ZINC PLATED C 5 |
| 34 | *71257-011 | EA | | NUT, HEX HD, SLF-LKG, 5/8"-11 UNC-3B | STEEL | ASTM A307 GRADE 2 | | ZINC PLATED ESNA #21 NE 101 OR EQUAL |

* INVENTORY STOCK ITEM

C 2

| | |
|---|---|
| MMC DWG NO: 0201-167-01 | |
| USCG APPRV: | DATE: |
| ABS APPRV: | DATE: |

| SIZE | FSCM | DRAWING NO. | REV. |
|---|---|---|---|
| C | 81340 | 175-WLM-167-001 | H |
| SCALE AS NOTED | | 4 OF 17 | |

DWG. NO. 175-WL-167-001 SH 4 REV H

# PARTS LIST

QUANTITES ARE FOR ONE SHIP

G 4

| P/N | MMC STD. P/N | U/M | QTY. | DESCRIPTION | MATERIAL OR VENDOR | SPEC.,GRADE OR MODEL | UNIT WEIGHT | REMARKS |
|---|---|---|---|---|---|---|---|---|
| 35 | *71261-011 | EA | · | WASHER FLAT, 5/8" STD | STEEL | ASTM A307 GRADE 2 | | ZINC PLATED |
| 36 | 50029-005 | LF | · | PIPE, 3/4" SCH 40, SEAMLESS | STEEL | ASTM A-106 GRADE B | | PLAIN FINISH, PLAIN ENDS |
| 37 | 61003-001 | EA | 25 | END CAP, MOLDED<br>1" I.D. MIN, 1-1/2" O.D., 1/4" THK | NEOPRENE | | | ATLANTIC INDIA RUBBER CO. #305 OR EQUAL |
| 38 | 66024-001 | TU | · | ADHESIVE, NEOPRENE, 3 OZ. SIZE | NEOPRENE | | | MCMASTER CARR #7506A4 OR EQUAL (CATALOG 98) |
| 39 | 55290-020 | EA | · | CAPLUG, 5/8" X 7/8", POLYETHELENE | POLYETHELENE | | | |
| 40 | 81080-001 | EA | 2 | GASKET, 1/8" THK, VEGETABLE FIBER<br>FOR 15" X 18" C.O. MANHOLE | VEGETABLE FIBER | | | FABRICATED IAW SKETCH MMC 0101-167-01-SK2<br>W/ 11/16" DIA HOLES G 2 |
| 41 | 90987-001 | EA | 16 | WRENCH, 15/16" SINGLE OPENED<br>15° ANGLE OFFSET | STEEL | | | MCMASTER CARR #5400A27 OR EQUAL (CATALOG 98)<br>BLACK FINISH |
| 42 | 90988-010 | EA | · | HEX KEY, T-HANDLE, 3/8" SIZE HEX, 6" BLADE LENGTH | STEEL | | | MCMASTER CARR 5374A21 OR EQUAL (CATALOG 98) |
| 43 | 71660-074 | EA | 70 | MACHINE SCREWS, 5/8"-11 UNC-2A, FLATHEAD, 1-1/4" LG<br>HEXAGONAL DRIVE SOCKET, 80° COUNTERSUNK HEAD | CRES 304 | | | |
| 44 | 72006-001 | EA | 25 | HOOK AND STAPLE PLATE, 5" LONG, 5/16" DIA WIRE | STEEL | | | MCMASTER CARR #1727A4 OR EQUAL (CATALOG 98)<br>ZINC PLATED<br>NOTE: SCRAP STAPLE & REPLACE WITH P/N 44A H 2 E 2 |
| 44A | 71702-025 | EA | 29 | STAPLE U-BOLT, 3/8" | STEEL | | | MCMASTER CARR P/N 3043T11 |
| 110-00 A24A | | EA | · | PLATE, 1-1/2" THK X 8'-0" X 30'-0" | STEEL | ABS GRADE A | | FOR MANHOLE RINGS B 5 |
| 110-00 A06A | | EA | · | PLATE, 3/8" X 8'-6" X 40'-0" | STEEL | ABS GRADE A | | FOR MANHOLE COVERS |
| S1 | | LF | · | ROUNDBAR, 1/2" DIA | STEEL | ASTM A-36 | | |
| 110-00 A12A | | SF | · | PLATE, 3/4" | STEEL | ABS GRADE A | | FOR RAISED MANHOLE RINGS |
| CROP | | SF | · | PLATE, 1/8" | STEEL | ABS GRADE A | | FOR RAISED MANHOLE RINGS |
| CROP | | SF | · | PLATE, 3/16" | STEEL | ABS GRADE A | | FOR RAISED MANHOLE RINGS |
| 45 | 81084-001 | EA | 1 | GASKET, 1/8" THK FOR 15" X 18" MANHOLE | NEOPRENE | | | FABRICATED IAW SKETCH MMC 0101-167-01-SK2<br>W/ 11/16" DIA HOLES G 2 |

* INVENTORY STOCK ITEM

C 2

| | | | |
|---|---|---|---|
| MMC DWG NO: 0201-167-01 | | | |
| USCG APPRV: | DATE: | | |
| ABS APPRV: | DATE: | | |
| SIZE C | FSCM 81340 | DRAWING NO. 175-WLM-167-001 | REV. H |
| SCALE AS NOTED | | 5 OF 17 | |

DWG. NO. 175-WLM-167-001 SH 5 REV H

# PARTS LIST

QUANTITES ARE FOR ONE SHIP

| P/N | MMC STD. P/N | U/M | QTY. | DESCRIPTION | MATERIAL OR VENDOR | SPEC.,GRADE OR MODEL | UNIT WEIGHT | REMARKS |
|---|---|---|---|---|---|---|---|---|
| 46 | STK 71001-007 | EA | 58 | BOLT, 1/4-20UNC-2A x 1 1/4" LG, REG HEX HEAD | STEEL | ASTM A307 GRADE 2 | | ZINC PLATED |
| 47 | 71257-005 | EA | 58 | NUT, REG HEX HEAD, SELF LOCKING, 1/4-20UNC-3B | STEEL | . . | | ZINC PLATED . |
| 48 | 71261-005 | EA | 58 | WASHER, FLAT, 1/4" NOM | STEEL | ASTM A307 GRADE 2 | | ZINC PLATED . |
| 49 | . | EA | 1 | GASKET, NEOPRENE, 1/8" THICK, 40 DUROMETER +5, 150° | NEOPRENE | . . | | MCMASTER-CARR #8568K13 OR EQUAL SEE NOTE 3, SHEET 17 |
| 50 | . | . | . | | . | . . | | . . |
| 51 | 110-00-A03A | EA | . | PLATE, 3/16" x 8'-9" x 40'-0" | STEEL | ABS GRADE A | | FOR UPTAKE ACCESS COVERS AND BOLTING RINGS . |
| 52 | 110-00-S54 | EA | . | ANGLE, 2 1/2" x 2" x 3/16" | STEEL | ABS GRADE A | | FOR MAIN DECK ACCESS COVER STIFFENING . |
| 53 | 110-00-S70 | EA | . | ROUND BAR, 3/4" | STEEL | AISI 1018 | | ACCESS COVER HANDLES . |
| 54 | 50029-008 | LF | . | 1 1/2" SCH 40 PIPE | STEEL | ASTM A-106 . | | STOWAGE . |
| 55 | *71013-002 | EA | 24 | BOLT, 5/8"-11UNC-2A x 1 1/4" LG | STEEL | ASTM A307 GRADE 2 | | △E 2 |
| 56 | . | . | . | NOT USED | . | . . | | . . |
| 65 | . | . | . | . NOT USED . | . | . . | | . . |
| 66 | | EA | 32 | CHANNEL, 2" x 1" x 1/8" | STEEL | GR 36 | | FOR WRENCH STOWAGE, CUT FROM P/N 637-01-28 △D 2 |
| 68 | . | . | . | . NOT USED . | . | . . | | . . |
| 68 | . | . | . | . NOT USED . | . | . . | | . . |

* INVENTORY STOCK ITEM

△C 2, 14

| | | | |
|---|---|---|---|
| MMC DWG NO: 0201-167-01 | | | |
| USCG APPRV: | DATE: | SIZE C | FSCM 81340 | DRAWING NO. 175-WLM-167-001 | REV. G |
| ABS APPRV: | DATE: | SCALE AS NOTED | 5A OF 17 |

DWG. NO. 175-WLM-167-001 SH 5A REV G

# LIST OF STRUCTURAL DOORS

| FIND NO. | DOOR NO. | DECK | COMPARTMENT ACCESS | LOC FROM FRAME | LOC OFF CL | TYPE | CLEAR OPENING | DOOR P/N | INSTALL DETAILS | INSTALL ON MODULE | HAND | SWING | HOOK | BUMPER | HASP & STAPLE | FIXED LIGHT | WATER SHED | DESIGN PRESS (PSI) | REMARKS |
|---|---|---|---|---|---|---|---|---|---|---|---|---|---|---|---|---|---|---|---|
| 1 | | 1ST PLATF | 3–8–0–E BOW THRUSTER RM | BHD 15 * | 6'–6" (P) | WT | 30 x 66 | 22 | 15–A | 910 | RH | OF | GN 8 | 14–A | – | – | – | 13 EXT 5 INT | B 6 |
| 2 | | 1ST PLATF | 3–15–0–E HYDRAULIC EQPT RM | BHD 24 * | 6'–8" (P) | WT | 30 x 66 | 22 | 15–A | 920 | RH | OF | GN 8 | 14–A | – | – | – | 13 EXT 5 INT | C 7 B 6 |
| 3 | | 1ST PLATF | 3–24–0–AA CARGO HOLD | BHD 35 * | 20" (P) | WT | 26 x 66 | 3 | 15–A | 920 | RH | OF | GN 8 | 14–A | – | Y | – | 13 EXT 5 INT | E 3 B 6 |
| 4 | | 1ST PLATF | 2–35–2–L PASSAGE | BHD 42 * | 20" (P) | WT | 26 x 66 | 3 | 15–A | 920 | RH | OF | GN 8 | 14–A | – | Y | – | 13 EXT 5 INT | C 16 B 6 |
| 5 | | 1ST PLATF | 3–42–0–Q MACHINE SHOP | BHD 52 * | 1'–8" (P) | WT | 26 x 66 | 21 | 15–A | 930 | LH | IF | GN 8 | 14–A | – | – | – | 13 EXT 5 INT | |
| 6 | | 1ST PLATF | 3–61–0–E ENGINE ROOM | BHD 61 * | 1'–7" (S) | WT | 30 x 66 | 20 | 15–A | 940 | LH | OF | GN 8 | 14–A | – | – | – | 13 EXT 5 INT | D 1 |
| 7 | | 1ST PLATF | 3–79–0–E PUMP ROOM | BHD 79 * | 3'–4" (P) | WT | 26 x 66 | 2 | 15–A | 940 | RH | IA | GN 8 | 14–A | – | – | – | 13 EXT 5 INT | |
| 8 | | 1ST PLATF | 3–88–0–E PROPULSION ROOM | BHD 88 * | 2'–6" (P) | WT | 26 x 66 | 21 | 15–A | 940 | LH | IF | GN 8 | 14–A | – | – | – | 13 EXT 5 INT | |
| 9 | | 1ST PLATF | 2–57–1–Q ELECTRIC SHOP | 6 1/2" FWD FR 60 | 3'–4" (S) | WEAT | 26 x 66 | 14 | 15–A | 930 | LH | OA | GN 8 | 14–A | Y | – | – | 13 EXT 5 INT | C 6 B 6 A 2 |
| 10 | | | NOT USED | | | | | | | | | | | | | | | | |
| 11 | | MAIN DECK | 1–10–0–Q ATON SHOP | BHD 15 * | 6'–8" (P) | WT | 26 x 66 | 11 | 15–A | 910 | LH | OA | GN 8 | 14–A | Y | – | – | 13 EXT 5 INT | A 2 |
| 12 | | MAIN DECK | 1–10–1–Q SERVICE LOCKER | BHD 15 * | 11'–8" (S) | WT | 26 x 66 | 10 | 15–A | 910 | RH | OA | GN 8 | 14–A | Y | – | – | 13 EXT 5 INT | A 2 |
| 13 | | | NOT USED | | | | | | | | | | | | | | | | |
| 14 | | | NOT USED | | | | | | | | | | | | | | | | |
| 15 | | MAIN DECK | 1–52–0–L PASSAGE | BHD 52 * | 1'–8" (P) | WT | 30 x 66 | 18 | 15–A | 960 | ** RH | ** OF | GN 8 | 14–A | Y | Y | – | 13 EXT 5 INT | ** LH, IF – INSTALLED HULL 554 E 3 |
| 16 | | | NOT USED | | | | | | | | | | | | | | | | |
| 17 | | | NOT USED | | | | | | | | | | | | | | | | |
| 18 | | MAIN DECK | 1–61–0–L MESS ROOM | BHD 61 * | 1'–7" (P) | WT | 30 x 66 | 4 | 15–A | 960 | RH | OF | GN 8 | 14–A | – | Y | – | 13 EXT 5 INT | |
| 19 | | | NOT USED | | | | | | | | | | | | | | | | |
| 20 | | | NOT USED | | | | | | | | | | | | | | | | |

* = MOUNTING SURFACE

C 2

| | |
|---|---|
| MMC DWG NO: 0201–167–01 | |
| USCG APPRV: | DATE: |
| ABS APPRV: | DATE: |
| SIZE C | FSCM 81340 |
| DRAWING NO. 175–WLM–167–001 | REV E |
| SCALE AS NOTED | 6 OF 17 |

DWG. NO. 175–WLM–167–001 SH 6 REV E

# LIST OF STRUCTURAL DOORS

| FIND NO. | DOOR NO. | DECK | COMPARTMENT ACCESS | LOC FROM FRAME | LOC OFF CL | TYPE | CLEAR OPENING | DOOR P/N | INSTALL DETAILS | INSTALL ON MODULE | HAND | SWING | HOOK | BUMPER | HASP & STAPLE | FIXED LIGHT | WATER SHED | DESIGN PRESS (PSI) | REMARKS |
|---|---|---|---|---|---|---|---|---|---|---|---|---|---|---|---|---|---|---|---|
| 21 | | MAIN DECK | 1–79–0–L PASSAGE | BHD 79 * | 2'–5" (P) | WT | 26 X 66 | 3 | 15–A | 970 | RH | OF | GN 8 | 14–A | – | Y | – | 13 EXT 5 INT | |
| 22 | | | NOT USED | | | | | | | | | | | | | | | | |
| 23 | | | NOT USED | | | | | | | | | | | | | | | | |
| 24 | | CONTROL ROOM | 01 1/2–50–0–C BUOY DECK CONTROL ROOM | FR 51 | 5'–0" (P) | WEAT | 26 X 66 | 12 | 15–A | 960 | RH | OA | GN 8 | 14–A | Y | Y | Y | 13 EXT 5 INT | 14" X 18" FIXED LIGHT |
| 25 | | CONTROL ROOM | 01 1/2–50–0–C BUOY DECK CONTROL ROOM | FR 51 | 5'–0" (S) | WEAT | 26 X 66 | 13 | 15–A | 960 | LH | OA | GN 8 | 14–A | Y | Y | Y | 13 EXT 5 INT | 14" X 18" FIXED LIGHT |
| 26 | | 01 LVL | 01–55–0–L PASSAGE | 1 1/2" AFT FR 67 | 14'–2" (P) | WEAT | 26 X 66 | 15 | 15–A | 960 | LH | OF | GN 8 | 14–A | Y | Y | – | 13 EXT 5 INT | |
| 27 | | 01 LVL | 01–55–0–L PASSAGE | FR 69 | 10'–10" (S) | WEAT | 26 X 66 | 14 | 15–A | 960 | RH | OF | GN 8 | 14–A | Y | Y | Y | 13 EXT 5 INT | |
| 28 | | 01 LVL | 01–70–1–Q BOAT LOCKER | 6" FWD FR 72 | 9'–2" (S) | WEAT | 26 X 66 | 16 | 15–A | 970 | RH | OF | GN 8 | 14–A | Y | Y* | Y | 13 EXT 5 INT | * NO FIXED LIGHT HULL 554 & FOL |
| 29 | | 01 LVL | 01–83–4–Q TRASH LOCKER | BHD 86 * | 12'–1" (P) | WEAT | 26 X 66 | 17 | 15–A | 970 | LH | OA | GN 8 | 14–A | Y | Y* | Y | 13 EXT 5 INT | * NO FIXED LIGHT HULL 554 & FOL |
| 30 | | | NOT USED | | | | | | | | | | | | | | | | |
| 31 | | | NOT USED | | | | | | | | | | | | | | | | |
| 32 | | 02 LVL | 02–61–2–Q PFD LOCKER | 1 1/2" AFT FR 65 | 10'–0" (P) | WEAT | 26 X 66 | 17 | 15–A | 960 | LH | OF | GN 8 | 14–A | Y | Y* | Y | 13 EXT 5 INT | * NO FIXED LIGHT HULL 554 & FOL |
| 33 | | 02 LVL | 02–61–1–Q PFD LOCKER | 1 1/2" AFT FR 65 | 10'–0" (S) | WEAT | 26 X 66 | 16 | 15–A | 960 | RH | OF | GN 8 | 14–A | Y | Y* | Y | 13 EXT 5 INT | * NO FIXED LIGHT HULL 554 & FOL |
| 34 | | | NOT USED | | | | | | | | | | | | | | | | |
| 35 | | 02 LVL | 02–68–2–E EMERGENCY GEN ROOM | FR 71 | 10'–0" (P) | WEAT | 26 X 66 | 17 | 15–A | 970 | LH | OF | GN 8 | 14–A | Y | Y* | Y | 13 EXT 5 INT | * NO FIXED LIGHT HULL 554 & FOL (A)4 |
| 36 | | PILOT HOUSE | 02 1/2–52–0–C PILOT HOUSE | 6" AFT FR 59 | 10'–0" (P) | WEAT | 26 X 66 | 13 | 15–A | 960 | LH | OF | GN 8 | 14–A | Y | Y | Y | 13 EXT 5 INT | 14" X 18" FIXED LIGHT |
| 37 | | PILOT HOUSE | 02 1/2–52–0–C PILOT HOUSE | 6" AFT FR 59 | 10'–0" (S) | WEAT | 26 X 66 | 12 | 15–A | 960 | RH | OF | GN 8 | 14–A | Y | Y | Y | 13 EXT 5 INT | 14" X 18" FIXED LIGHT |
| 38 | | | NOT USED | | | | | | | | | | | | | | | | |
| 39 | | | NOT USED | | | | | | | | | | | | | | | | |
| 40 | | | NOT USED | | | | | | | | | | | | | | | | |

* = MOUNTING SURFACE

(E)8 (C)2

MMC DWG NO: 0201–167–01
USCG APPRV: DATE:
ABS APPRV: DATE:

SIZE C | FSCM 81340 | DRAWING NO. 175–WLM–167–001 | REV. E
SCALE AS NOTED | 7 OF 16

DWG. NO. 175–WLM–167–001 SH 7 REV E

MLCA (V) LIBRARY COPY

# LIST OF HATCHES AND SCUTTLES

| FIND NO. | SCUTTLE OR HATCH NO. | DECK | COMPARTMENT ACCESS | LOC FROM FRAME | LOC OFF CL | TYPE | CLEAR OPENING | P/N | INSTALL DETAILS | INSTALL ON MODULE | HINGE SIDE | HOLD OPEN | HASP & STAPLE | O.A. COAMING HEIGHT | TOGGLE PIN LKG | DESIGN PRESS (PSI) | REMARKS |
|---|---|---|---|---|---|---|---|---|---|---|---|---|---|---|---|---|---|
| 41 | 1–7–2 | MAIN DECK | 3–6–0–E BOW THRUSTER RM | 1" AFT FR 7 | 4'–9 3/4" (P) | RWT W/ QAS | 30 X 60 | 5 | 15–B | 910 | INBD | BRACE | – | 6" | – | 13 EXT 5 INT | D 11 B 7 A 3 J 4 |
| 42 | | | NOT USED | | | | | | | | | | | | | | |
| 43 | | MAIN DECK | 3–15–0–E HYDRAULIC EQPT RM | 1 5/8" AFT FR 20 | 3'–9 3/16" (P) | RWT QAS | 21" DIA | 7 | 16–C | 910 | FWD | GN 1 | Y | 12" | – | 13 EXT 5 INT | |
| 44 | 1–50–1 | MAIN DECK | 3–42–0–Q MACHINE SHOP | 10" AFT FR 50 | 1'–6" (S) | RWT W/ QAS | 30 X 30 | 6 | 15–B | 930 | FWD | BRACE | Y | 12" | – | 13 EXT 5 INT | J 4 |
| 45 | | | NOT USED | | | | | | | | | | | | | | |
| 46 | | MAIN DECK | 2–52–0–C E.C.C. | 10" AFT FR 54 | 15'–2" (P) | FLQA WT SC | 21" DIA | 8 | 16–A 16–D(REF) | 930 | OUTBD | GN 1 | – | – | N | 13 EXT 5 INT | B 7 C 18 D 8 |
| 47 | 1–56–1 | MAIN DECK | 2–52–0–C E.C.C. | FR 56 | 1'–8 1/2" (S) | RWT W/ QAS | 30 X 60 | 5 | 15–B | 930 | AFT | BRACE | – | 6" | – | 13 EXT 5 INT | B 7 J 4 |
| 48 | | | NOT USED | | | | | | | | | | | | | | |
| 49 | | | NOT USED | | | | | | | | | | | | | | |
| 50 | | MAIN DECK | 3–61–0–E ENGINE ROOM | 13" AFT FR 76 | 5'–4" (S) | FLQA WT SC | 21" DIA | 8 | 16–A 16–D(REF) | 940 | OUTBD INBD ON 551 ONLY | GN 1 | – | – | – | 13 EXT 5 INT | B 7 C 8 D 8 |
| 51 | | | NOT USED | | | | | | | | | | | | | | |
| 52 | | MAIN DECK | 3–79–0–E PUMP ROOM | FR.80 5"FWD FR.80 HULL 551(ONLY) | 6'–6" (P) | FLQA WT SC | 21" DIA | 8 | 16–A 16–D(REF) | 940 | AFT | GN 1 | – | – | – | 13 EXT 5 INT | C 9 D 8 |
| 53 | 01–5–2 | FOCSLE DECK | 1–0–0–Q LINE LOCKER | FR 5 | 5'–3" (P) | RWT QAS | 18" DIA | 9 | 16–C | 901 | FWD | GN 1 | – | 12" | Y | 13 EXT 5 INT | A 3 J 4 |
| 54 | 01–5–1 | FOCSLE DECK | 1–0–0–Q LINE LOCKER | FR 5 | 5'–3" (S) | RWT QAS | 18" DIA | 9 | 16–C | 901 | FWD | GN 1 | – | 12" | Y | 13 EXT 5 INT | A 3 J 4 |
| 55 | | 01 DECK | 1–79–3–L CREW SR | 4" AFT FR 87 | 11'–5" (S) | RWT QAS | 21" DIA | 7 | 16–C | 970 | FWD | GN 1 | Y | 12" | – | 13 EXT 5 INT | D 12 |
| 56 | 01–89–2 | 01 DECK | 3–88–0–E PROPULSION THRUSTER RM | 3 3/4" FWD FR 90 | 15–6" (P) | RWT W/ QAS | 30 X 30 | 6 | 15–B | 950 | FWD | BRACE | Y | 12" | – | 13 EXT 5 INT | A 5 J 4 |
| 57 | | | NOT USED | | | | | | | | | | | | | | |
| 58 | | BLW FOCSLE DECK | 3–4–2–Q CHAIN LKR (P) | 10" FWD FR 5 | 40" OFF CL (P) | RWTI | 15 X 23 | 19 | 15–C | 901 | FWD | HOOK | – | 6" | – | 13 EXT 5 INT | MOUNT VERTICALLY ON LONGL BHD AT 20'–6" ABL |
| 59 | | BLW FOCSLE DECK | 3–4–1–Q CHAIN LKR (S) | 10" FWD FR 5 | 40" OFF CL (S) | RWTI | 15 X 23 | 19 | 15–C | 901 | FWD | HOOK | – | 6" | – | 13 EXT 5 INT | MOUNT VERTICALLY ON LONGL BHD AT 20'–6" ABL |
| 60 | | MAIN DECK | 3–24–0–AA CARGO HOLD | FR 32 | CL | POWER OPERATED | 72 X 72 | 1 | REF #2 | 920 | FWD | YES | NO | FL | – | – | C 20 |

E 9 C 2

| | | | |
|---|---|---|---|
| MMC DWG NO: 0201–167–01 | | | |
| USCG APPRV: | DATE: | SIZE C | FSCM 81340 |
| ABS APPRV: | DATE: | SCALE AS NOTED | DRAWING NO. 175–WLM–167–001 REV J |
| | | | 8 OF 17 |

DWG. NO. 175–WLM–167–001 SH 8 REV J

# LIST OF HATCHES AND SCUTTLES

| FIND NO. | SCUTTLE OR HATCH NO. | DECK | COMPARTMENT ACCESS | LOC FROM FRAME | LOC OFF CL | TYPE | CLEAR OPENING | P/N | INSTALL DETAILS | INSTALL ON MODULE | HINGE SIDE | HOLD OPEN | HASP & STAPLE | O.A. COAMING HEIGHT | TOGGLE PIN LKG | DESIGN PRESS (PSI) | REMARKS |
|---|---|---|---|---|---|---|---|---|---|---|---|---|---|---|---|---|---|
| 61 | | P.H. TOP | 04–58–0–Q MAIN MAST | FR 59 | 2'–3" (P) | OVAL LIFT–OUT | 14 1/2 X 23 1/2 | 170–00 –16 | REF #4 | – | – | – | – | – | – | 13 EXT | D 10 |
| 62 | | | | | | | | | | | | | | | | | |
| 63 | | | | | | | | | | | | | | | | | |
| 64 | | | | | | | | | | | | | | | | | |
| 65 | | | | | | | | | | | | | | | | | |
| 66 | | | | | | | | | | | | | | | | | |
| 67 | | | | | | | | | | | | | | | | | |
| 68 | | | | | | | | | | | | | | | | | |
| 69 | | | | | | | | | | | | | | | | | |
| 70 | | | | | | | | | | | | | | | | | |
| 71 | | | | | | | | | | | | | | | | | |
| 72 | | | | | | | | | | | | | | | | | |
| 73 | | | | | | | | | | | | | | | | | |
| 74 | | | | | | | | | | | | | | | | | |
| 75 | | | | | | | | | | | | | | | | | |
| 76 | | | | | | | | | | | | | | | | | |
| 77 | | | | | | | | | | | | | | | | | |
| 78 | | | | | | | | | | | | | | | | | |
| 79 | | | | | | | | | | | | | | | | | |
| 80 | | | | | | | | | | | | | | | | | |

C 2,3

| | | | |
|---|---|---|---|
| MMC DWG NO: 0101–167–01 | | | |
| USCG APPRV: | DATE: | SIZE C | FSCM 81340 | DRAWING NO. 175–WLM–167–001 | REV E |
| ABS APPRV: | DATE: | SCALE AS NOTED | 9 OF 16 |

DWG. NO. 175–WLM–167–001 SH 9 REV E

# LIST OF MANHOLES B8 D6

| FIND NO. | ACCESS | | | LOCATION OF MANHOLE CL | | | CLEAR OPENING | GASKET PART NO. | WRENCH STOWAGE DETAIL | LENGTH DIRECTION | MODULE | INSTL DETAIL | REMARKS | REV |
|---|---|---|---|---|---|---|---|---|---|---|---|---|---|---|
| | TYPE | DECK | TO COMPARTMENT | FWD OR AFT OF FRAME | OFF CL SHIP | HEIGHT ABL | | | | | | | | |
| 81 | FLWT | MN DK | 3-0-0-V FOREPEAK | 10" FWD FR 3 | 17" (S) | 14'-6" | 23x15 | 31 | 14-E | P TO S | 901 | SHT 12 | | |
| 82 | RSDWT | PLT/HOLD | 3-35-1-V BALLAST TNK | 8 1/4" FWD FR 36 | 10'-0" (S) | 7'-10" | 23x15 | 31 | 14-D | VERT | 920 | SHT 13 | | |
| 83 | RSDWT | PLT/HOLD | 3-35-6-V BALLAST TNK | 10" FWD FR 37 | 10'-0" (P) | 7'-10" | 23x15 | 31 | 14-D | VERT | 920 | SHT 13 | | |
| 84 | | | NOT USED | | | | | | | | | | | |
| 85 | | | NOT USED | | | | | | | | | | | |
| 86 | RSDOT | 2'-9" LVL | 3-35-2-F FUEL OVFL TNK | 10" FWD FR 37 | 2'-1" (P) | 2'-9" | 23x15 | 32 | 14-D | P TO S | 920 | SHT 13 | | |
| 87 | | | NOT USED | | | | | | | | | | | |
| 88 | FLOT | 58 1/2" LVL | 3-24-1-F FUEL STOR TNK | 10" AFT FR 28 | 3"-4" (S) | 58 1/2" | 23x15 | 32 | 14-E | P TO S | 920 | SHT 12 | | |
| 89 | FLOT | 58 1/2" LVL | 3-24-2-F FUEL STOR TNK | 10" AFT FR 28 | 3'-4" (P) | 58 1/2" | 23x15 | 32 | 14-E | P TO S | 920 | SHT 12 | | |
| ~~90~~ | ~~FLWT~~ | ~~4'-8 1/2" LVL~~ | ~~3-24-1-F FUEL STOR TNK~~ | ~~10" FWD FR 26~~ | ~~2'-10" (S)~~ | ~~4'-8 1/2"~~ | ~~23x15~~ | ~~31~~ | ~~14-E~~ | ~~P TO S~~ | ~~920~~ | ~~SHT 12~~ | | |
| ~~91~~ | ~~FLWT~~ | ~~4'-8 1/2" LVL~~ | ~~3-24-2-F FUEL STOR TNK~~ | ~~10" FWD FR 26~~ | ~~2'-10" (P)~~ | ~~4'-8 1/2"~~ | ~~23x15~~ | ~~31~~ | ~~14-E~~ | ~~P TO S~~ | ~~920~~ | ~~SHT 12~~ | | |
| 92 | RSDWT | 4'-10 1/2" LVL | 2-36-1-W POTW TNK | 10" FWD FR 38 | @ CL | 8'-9 11/16" | 23x15 | 31 | 14-D | VERT | 920 | SHT 13 | | |
| 93 | FLWT | 2'-9" LVL | 3-52-0-V VOID | 10" FWD FR 55 | 60" (S) | 2'-9" | 23x15 | 31 | 14-E | P TO S | 930 | SHT 12 | | |
| 94 | FLWT | 2'-9" LVL | BLW3-61-0-E SEA BAY TNK | 8 1/4" FWD FR 69 | 1'-7 1/2" (P) | 2'-9" | 18x15 | 45 | 14-E | P TO S | 940 | SHT 12 | USE COVER P/N 104 W/O C'SINK W/ P/N 35,55 | G3 H3 |
| 95 | RSDOT | 5'-6" LVL | 3-74-0-F OILY WTR HLD TNK | 11 3/4" FWD FR 77 | 3'-4" (S) | 4'-0" | 23x15 | 32 | 14-D | VERT | 940 | SHT 13 | HULL 551 FLOT | |
| 96 | RSDOT | 5'-6" LVL | 3-77-0-F WASTE OIL TNK | 12" FWD FR 79 | 3'-4" (S) | 4'-0" | 23x15 | 32 | 14-D | VERT | 940 | SHT 13 | | |
| 97 | RSDOT | 2'-9" LVL | 2-77-1-F LUBE OIL TNK | 9" AFT FR 77 | 12'-1/4" (S) | 6'-4 7/8" | 18x15 | 40 | 14-D | P TO S | 940 | SHT 13 | | |
| 98 | RSDOT | 6'-6" LVL | 3-79-1-F FUEL SVCE TNK | 8 1/2" AFT FR 82 | 10'-0" (S) | 5'-0" | 23x15 | 32 | 14-D | VERT | 940 | SHT 13 | HULL 551 FLOT | |
| 99 | RSDOT | 6'-6" LVL | 3-79-2-F FUEL SVCE TNK | 8 1/2" AFT FR 82 | 10'-0" (P) | 5'-0" | 23x15 | 32 | 14-D | VERT | 940 | SHT 13 | HULL 551 FLOT | |
| 100 | RSDWT | 6'-6" LVL | 3-83-1-W GRAY WTR HLD TNK | FR 83 | 7'-7" (S) | 5'-0" | 23x15 | 31 | 14-D | VERT | 940 | SHT 13 | * 7'-6" (S) HULLS 551-556 | |
| 101 | RSDWT | 6'-6" LVL | 3-83-2-W GRAY WTR HLD TNK | FR 83 | 7'-7" (P) | 5'-0" | 23x15 | 31 | 14-D | VERT | 940 | SHT 13 | * 7'-6" (P) HULLS 551-556 | |
| 102 | RSDOT | 6'-6" LVL | 2-88-2-W SEW HLD TNK | 3 11/16" FWD FR 84 | 9'-5" (P) | 9'-7 1/16" | 23x15 | 32 | 14-D | VERT | 940 | SHT 13 | HULLS 551 & 552 ONLY | |
| ~~103~~ | ~~RSDOT~~ | ~~6'-6" LVL~~ | ~~3-79-0-E PMP RM TO TNK BLW~~ | ~~10" FWD FR 88~~ | ~~14'-2" (S)~~ | ~~6'-6"~~ | ~~18x15~~ | ~~40~~ | ~~14-D~~ | ~~P TO S~~ | ~~940~~ | ~~SHT 13~~ | | |
| ~~104~~ | ~~RSDOT~~ | ~~6'-6" LVL~~ | ~~3-79-0-E PMP RM TO TNK BLW~~ | ~~10" FWD FR 88~~ | ~~14'-2" (P)~~ | ~~6'-6"~~ | ~~18x15~~ | ~~40~~ | ~~14-D~~ | ~~P TO S~~ | ~~940~~ | ~~SHT 13~~ | | |
| 105 | RSDOT | 02 LVL | 02-77-1-F FUEL SERVICE TANK | 10" FWD FR78 | 1" (S) | 34'-4 7/8" | 18x15 | 40 | 14-D | VERT | 970 | SHT 13 | | |
| 106 | RSDOT | 03 LVL | 03-70-0-Q STACK | FR 70 | 8 5/8" (P) | 40'-8 1/2" | 23x15 | 31 | 14-D | VERT | 970 | SHT 13 | | |
| 107 | FLWT | 2'-9" LVL | 3-52-0-V VOID | 10" FWD FR 55 | 15'-6 1/2" (P) | 33" | 23x15 | 31 | 14-E | P TO S | 930 | SHT 12 | HULLS 552 & FOL. | |
| 108 | | MN DK | 3-18-0-T CRANE PED | 10" AFT FR 17 | @ CL | 20'-0" | 24" DIA | — | — | — | — | — | REF NO 2 VENDOR SUPPLIED | |
| 109 | RSDWT | MN DK | 1-94-0-W POTW TANK (HB 950) | 6 3/4" AFT FR 93 | 11 1/8 (P) | 19'-8 3/8" | 23x15 | 31 | 14-D | VERT | 950 | SHT 13 | | |
| 110 | RSDOT | 03 LVL | 03-70-0-Q STACK | 10" AFT FR 76 | 20" (P) | 41'-10" | 23x15 | 32 | 14-D | VERT | 970 | SHT 13 | | |
| 111 | RSDOT | 6'-6" LVL | 2-88-2-W SEW HLD TNK | FR 84 | 12'-0" (P) | 9'-6" | 23x15 | 32 | 14-D | VERT | 940 | SHT 13 | | |
| 112 | | | | | | | | | | | | | | |
| 113 | FLWT | 2'-9" | 3-52-0-V VOID | 10" FWD FR 58 | 60" (S) | 2'-9" | 23x15 | 31 | 14-E | P TO S | 930 | SHT 12 | HULL 551 ONLY | |
| 114 | | | | | | | | | | | | | | |
| 115 | | | | | | | | | | | | | | |
| 116 | | | | | | | | | | | | | | |
| 117 | | | | | | | | | | | | | | |
| 118 | | | | | | | | | | | | | | |
| 119 | | | | | | | | | | | | | | |
| 120 | | | | | | | | | | | | | | |
| 121 | | | | | | | | | | | | | | |
| 122 | | | | | | | | | | | | | | |
| 123 | | | | | | | | | | | | | | |
| 124 | | | | | | | | | | | | | | |
| 125 | | | | | | | | | | | | | | |
| 126 | | | | | | | | | | | | | | |
| 127 | | | | | | | | | | | | | | |
| 128 | | | | | | | | | | | | | | |
| 129 | | | | | | | | | | | | | | |
| 130 | | | | | | | | | | | | | | |

G3 F2 C2,10,13,19 D6,12 E7

MMC DWG NO: 0201-167-01
USCG APPRV: DATE:
ABS APPRV: DATE:

SIZE C | FSCM 81340 | DRAWING NO. 175-WLM-167-001 | REV. H
SCALE AS NOTED | 10 OF 17

DWG. NO. 175-WLM-167-001 SH 10 REV H

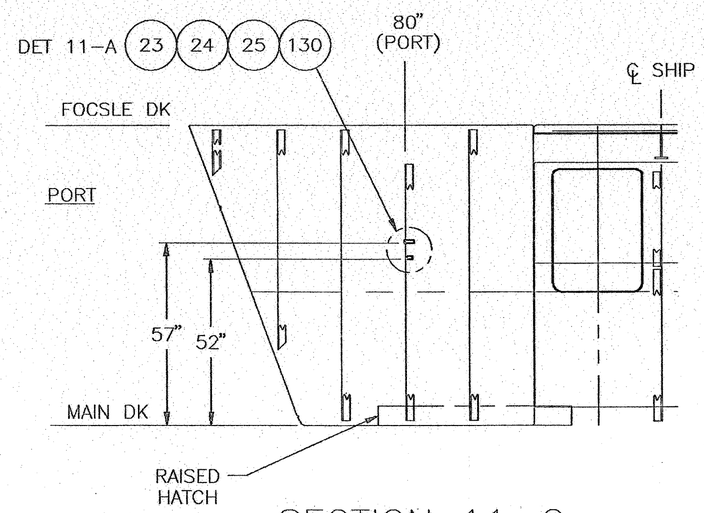


SECTION 11-C

BHD 6
LKG FWD
SCALE: 3/8"=1'-0"

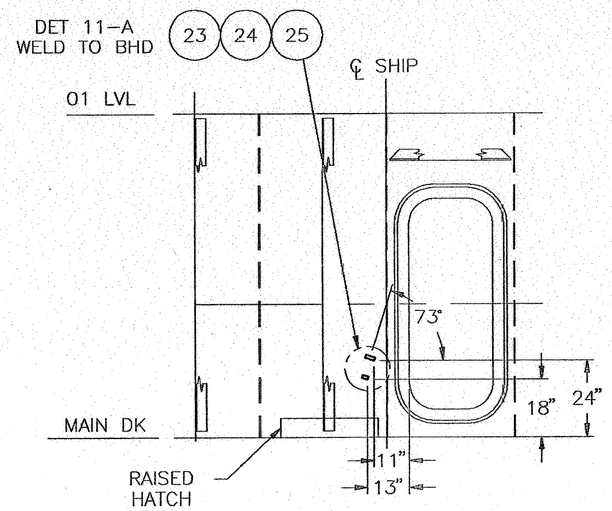


SECTION 11-B

BHD 52
LKG AFT
SCALE: 3/8"=1'-0"

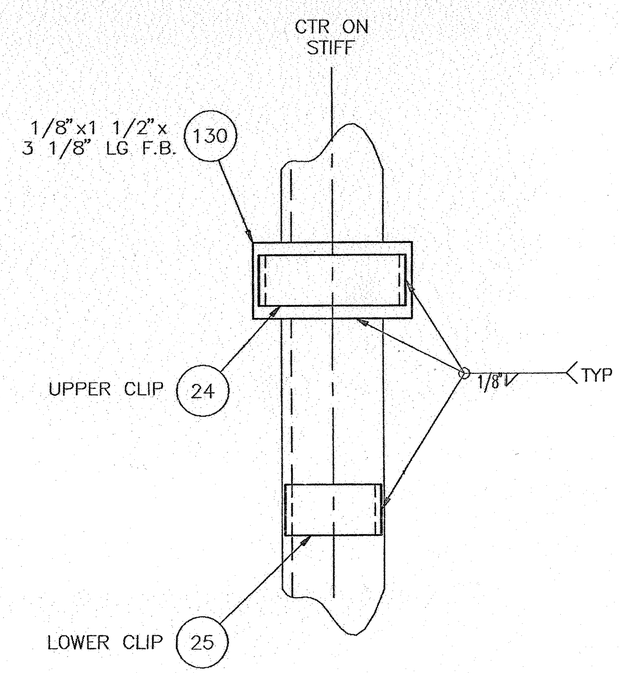


DETAIL 11-A

SCALE: 6"=1'-0"

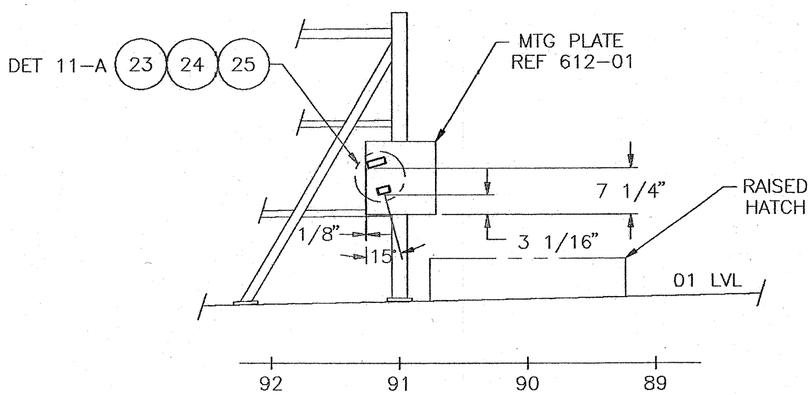


ELEV 11-E

PORT SIDE, LKG OUTBD
SCALE: 3/4"=1'-0"

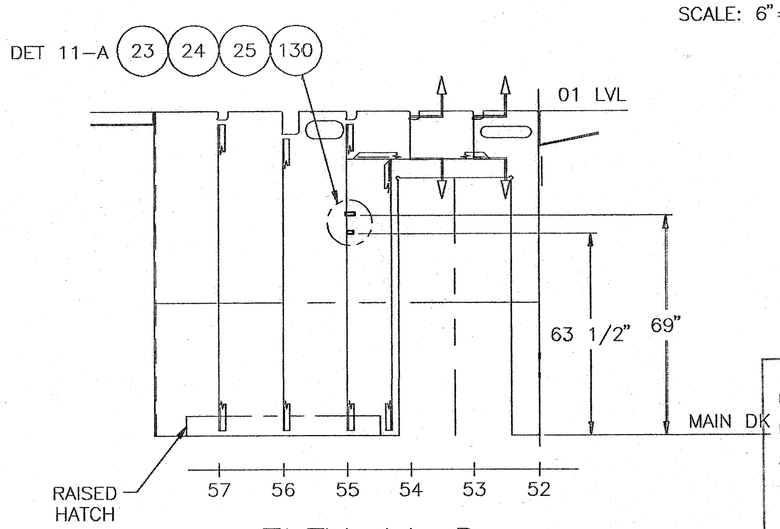


ELEV 11-D

CL BHD
LKG PORT
SCALE: 3/8"=1'-0"

IF THIS STAMP IS NOT PRINTED IN RED, THIS DRAWING IS NOT AN ORIGINAL. REVISIONS CAN ONLY BE MADE TO AN ORIGINAL

D 4

| | | | |
|---|---|---|---|
| MMC DWG NO: 0201-167-01 | | | |
| USCG APPRV: | DATE: | | |
| AES APPRV: | DATE: | | |
| SIZE C | FSCM 81340 | DRAWING NO. 175-WLM-167-001 | REV. E |
| SCALE AS NOTED | | SHEET 11 | |

DWG. NO. 175-WLM-167-001 SH 11 REV E

MLCA (V) LIBRARY COPY

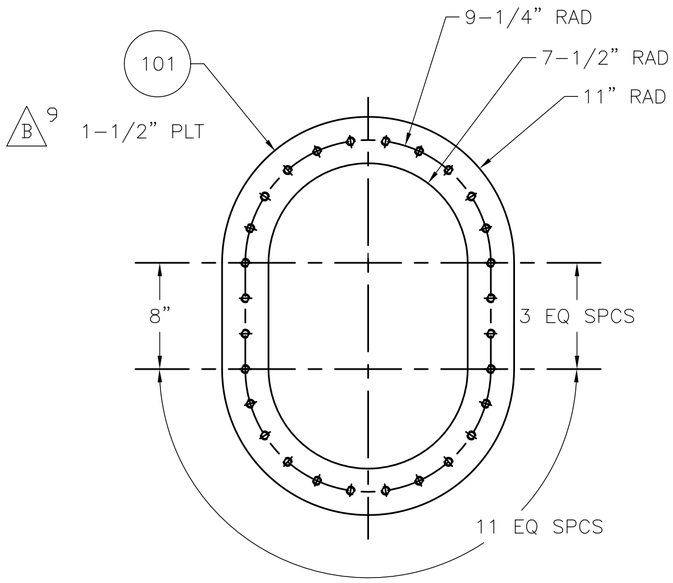


## 15" X 23" RING

SCALE: 1-1/2" = 1'-0"

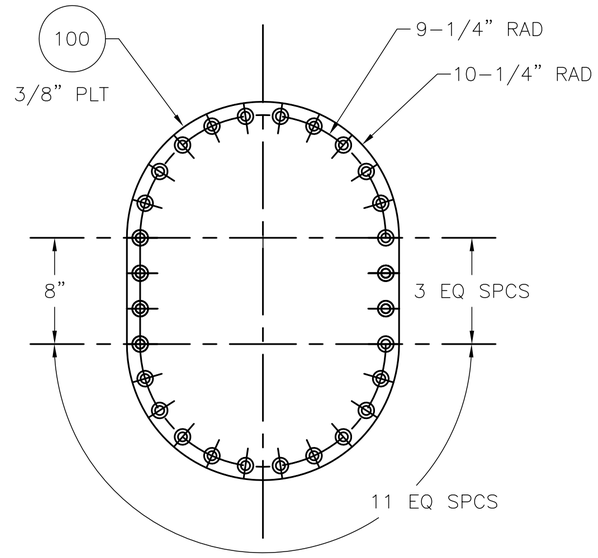


## 15" X 23" COVER

SCALE: 1-1/2" = 1'-0"

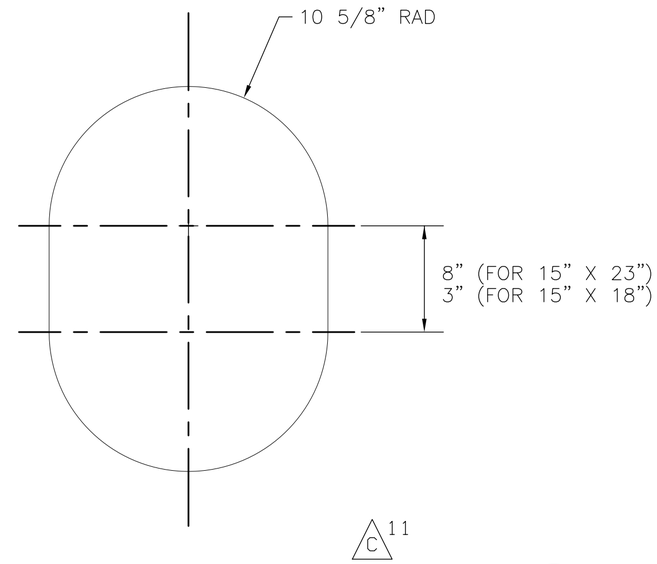


## DECK CUTS

SCALE: 1-1/2" = 1'-0"

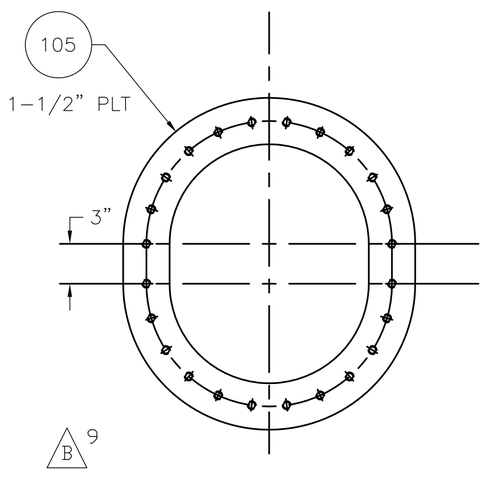


## 15" X 18" RING

SCALE: 1-1/2" = 1'-0"
FOR DETAILS NOT SHOWN
SEE 15" X 23" RING

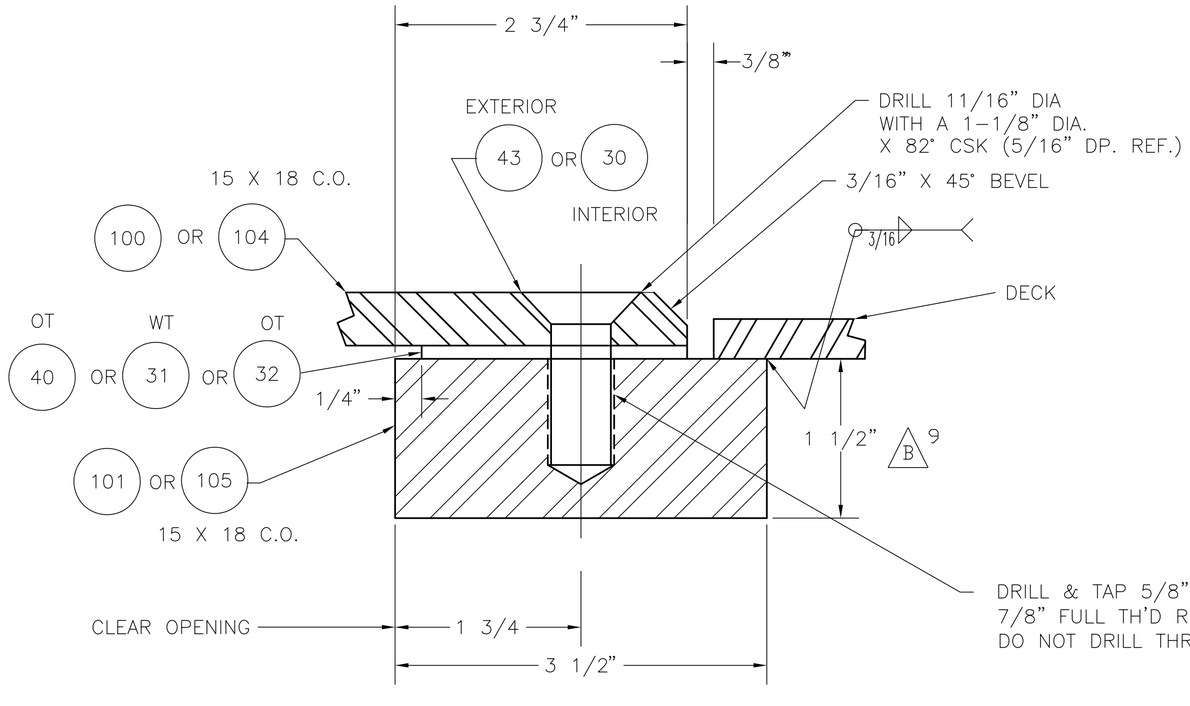


## DETAIL 12-A

TYPICAL FLUSH MANHOLE
SCALE: FULL SIZE

C 2

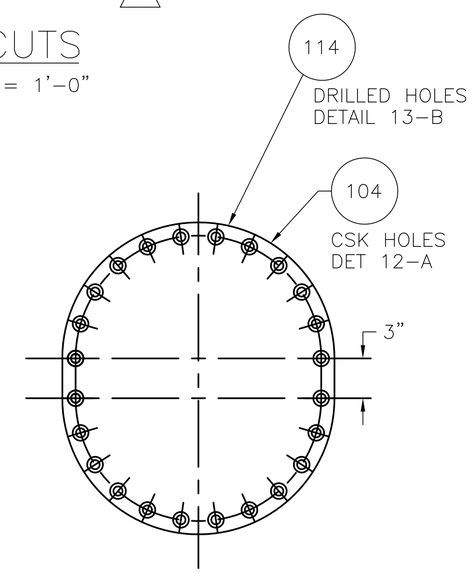


## 15" X 18" COVER

SCALE: 1-1/2" = 1'-0"
FOR DETAILS NOT SHOWN
SEE 15" X 23" COVER

| | | | | |
|---|---|---|---|---|
| MMC DWG NO: 0201-167-01 | | | | |
| USCG APPRV: | DATE: | SIZE C | FSCM 81340 | DRAWING NO. 175-WLM-167-001 REV E |
| ABS APPRV: | DATE: | SCALE AS NOTED | | 12 OF 17 |

DWG. NO. 175-WLM-167-001 SH 12 REV E

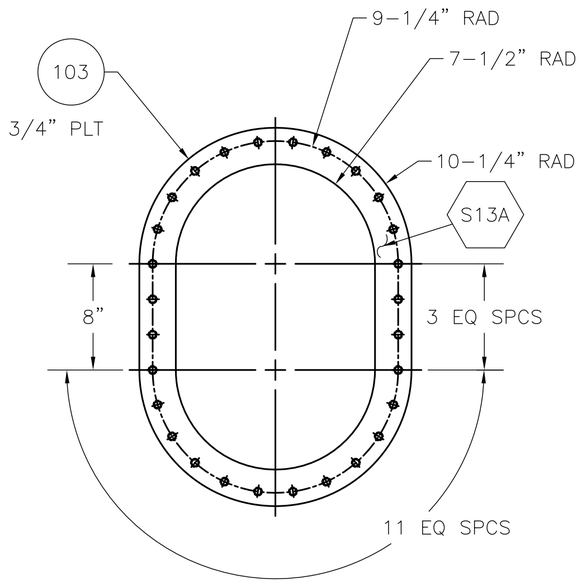


## 15" X 23" RING

SCALE: 1-1/2" = 1'-0"

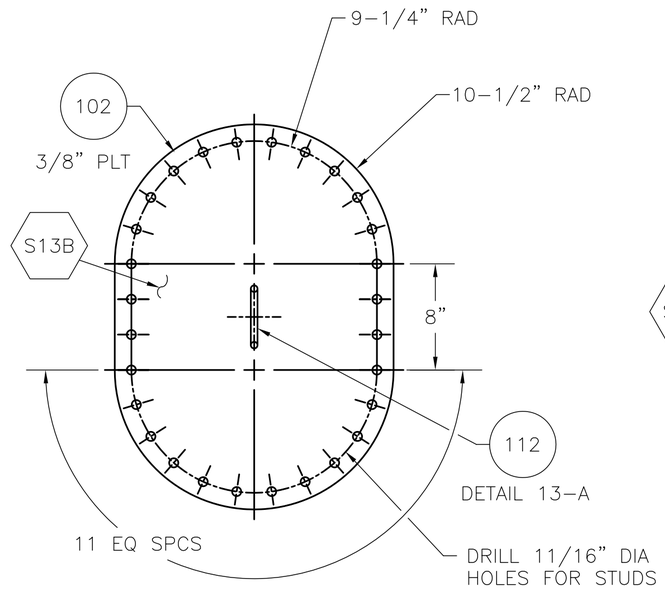


## 15" X 23" COVER

SCALE: 1-1/2" = 1'-0"

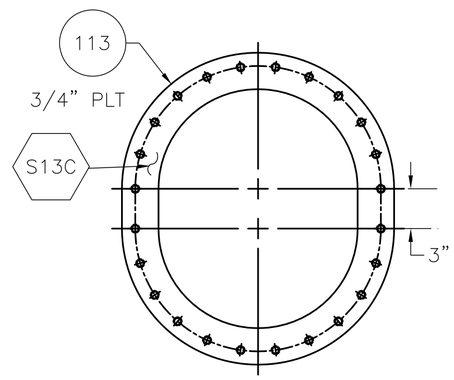


## 15" X 18" RING

FOR INFO NOT SHOWN, SEE 15"x23" RING
SCALE: 1-1/2" = 1'-0"

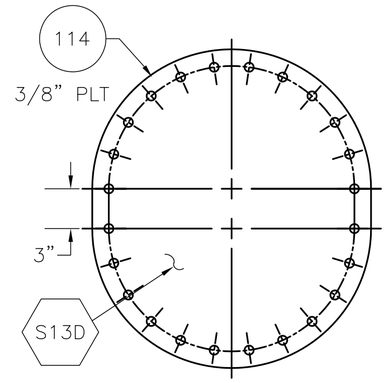


## 15" X 18" COVER

FOR INFO NOT SHOWN, SEE 15"x23" RING
SCALE: 1-1/2" = 1'-0"

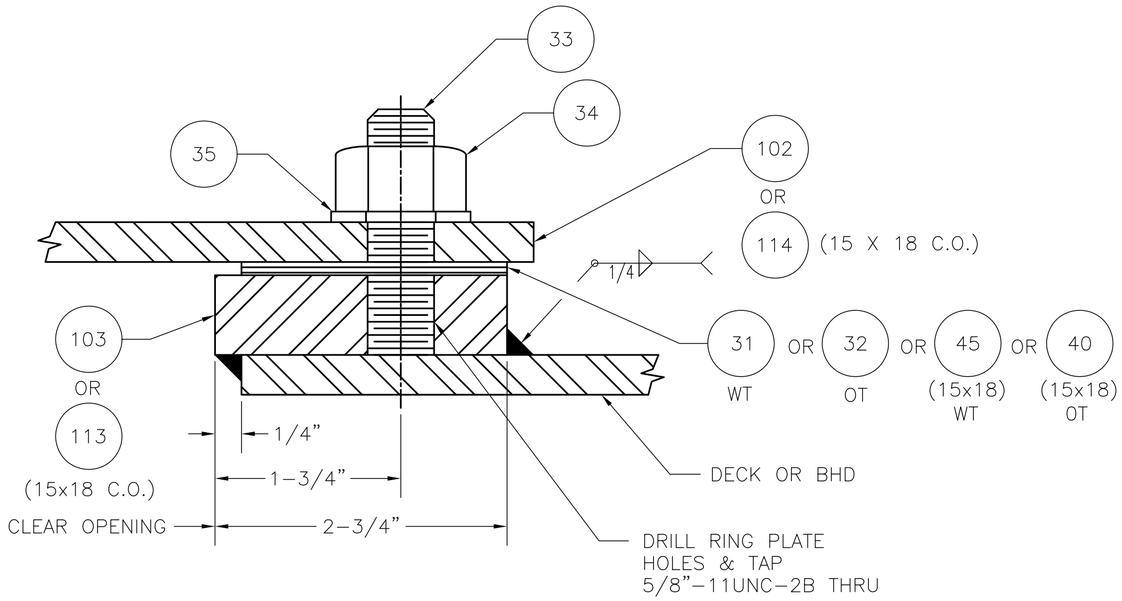


## DETAIL 13-B

TYPICAL RAISED MANHOLE
SCALE: FULL SIZE

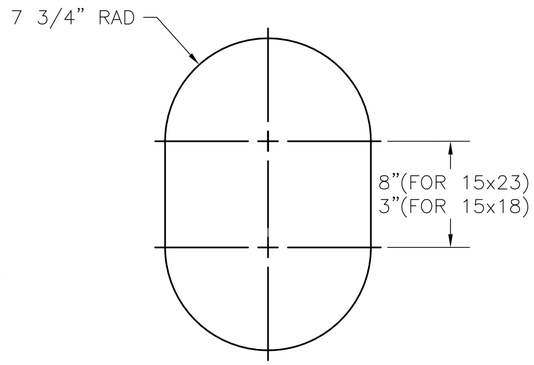


## CUTOUT

SCALE: 1-1/2" = 1'-0"

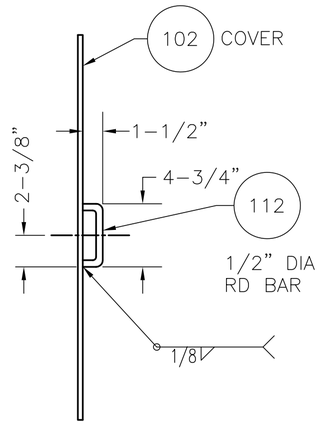


## DETAIL 13-A

TYPICAL HANDLE FOR 15" X 23"
RAISED MANHOLE - BHD MNT ONLY ("VERT")
SCALE 1-1/2" = 1'-0"

2,17
C

| | | | | |
|---|---|---|---|---|
| MMC DWG NO: 0201-167-01 | | | | |
| USCG APPRV: | DATE: | SIZE C | FSCM 81340 | DRAWING NO. 175-WLM-167-001 REV. E |
| ABS APPRV: | DATE: | SCALE AS NOTED | | 13 OF 17 |

DWG. NO. 175-WLM-167-001 SH 13 REV E

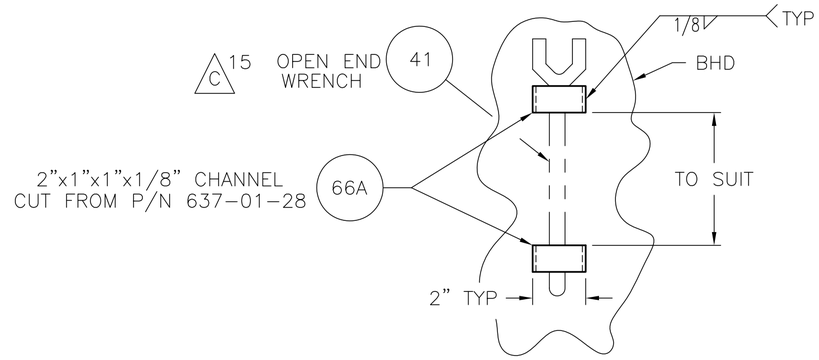


DETAIL 14-D
RAISED MANHOLE WRENCH STOWAGE
SCALE: 3"=1'-0"

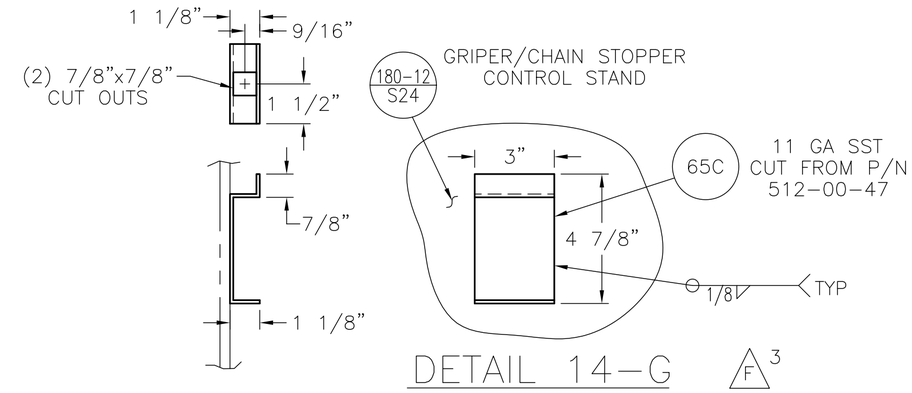


DETAIL 14-G 3 F
DECK SOCKET WRENCH STOWAGE
SCALE: 3"=1'-0"

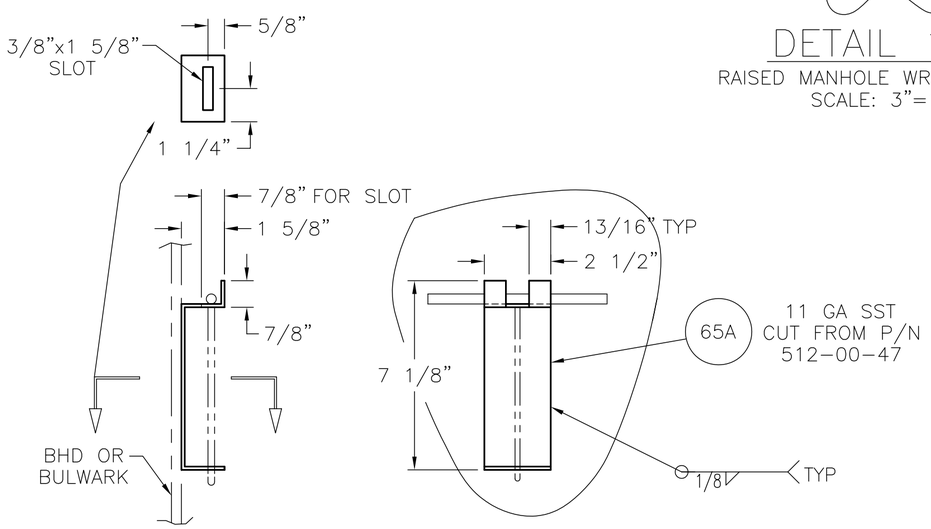


DETAIL 14-F
FLUSH SCUTTLE
T-WRENCH STOWAGE
SCALE: 3"=1'-0"

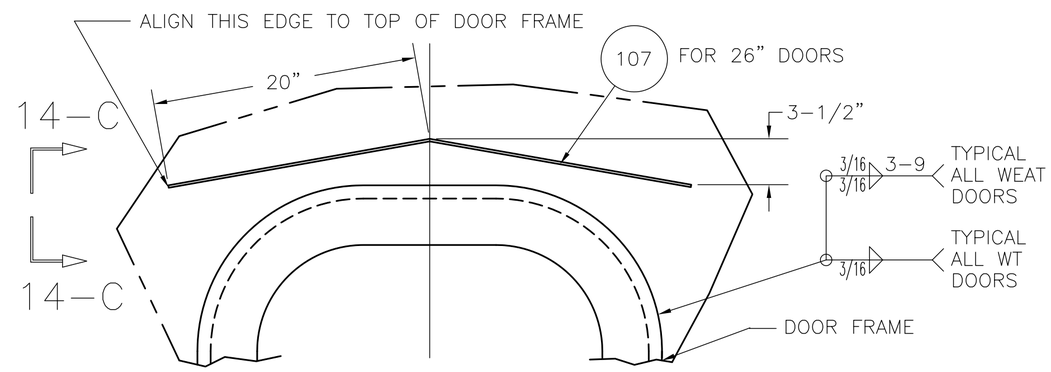


DETAIL 14-B
TYPICAL WATERSHED AND DOOR WELDING
SCALE: 1 1/2"=1'-0"

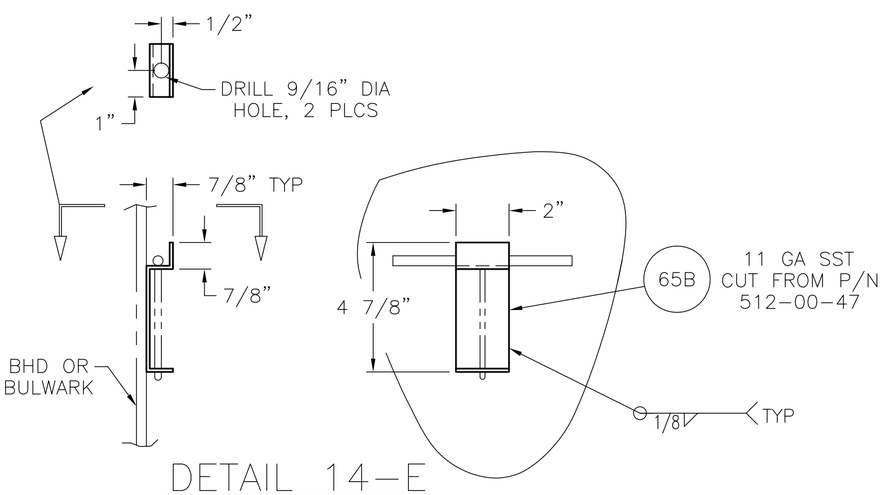


DETAIL 14-E
FLUSH MANHOLE
T-WRENCH STOWAGE
SCALE: 3"=1'-0"

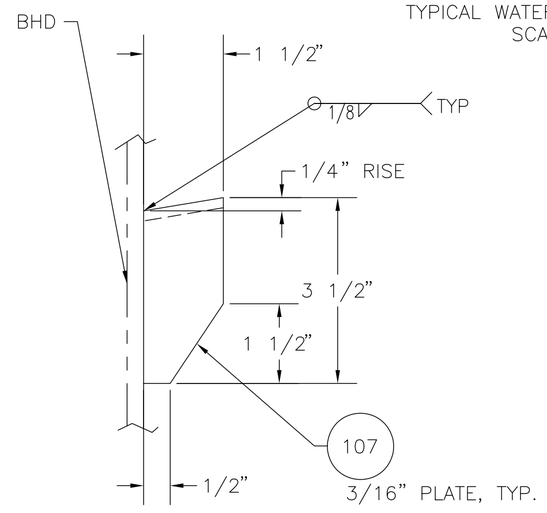


DETAIL 14-C
SCALE: 6"=1'-0"

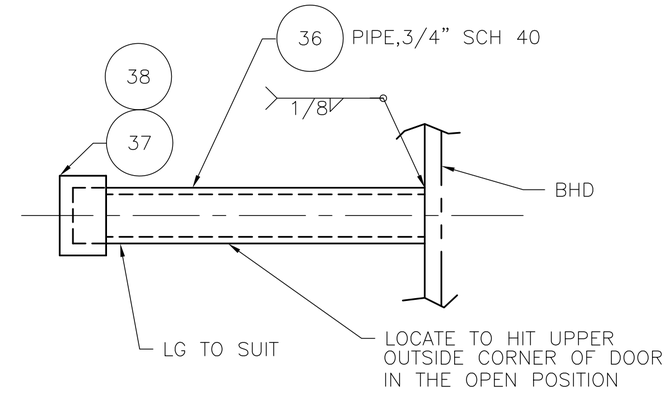


DETAIL 14-A
TYPICAL DOOR BUMPER
SCALE: 6"=1'-0"

D 2 C 2

| | | | | |
|---|---|---|---|---|
| MMC DWG NO: 0201-167-01 | | | | |
| USCG APPRV: | DATE: | SIZE C | FSCM 81340 | DRAWING NO. 175-WLM-167-001 REV. F |
| ABS APPRV: | DATE: | SCALE AS NOTED | | 14 OF 17 |

DWG. NO. 175-WLM-167-001 SH 14 REV F

| P/N | A | B | C |
|---|---|---|---|
| 5 | 30–1/2" | 60–1/2" | 9–1/4" |
| 6 | 30–1/2" | 30–1/2" | 7–3/4" |
| | | | |
| | | | |
| | | | |

C 12

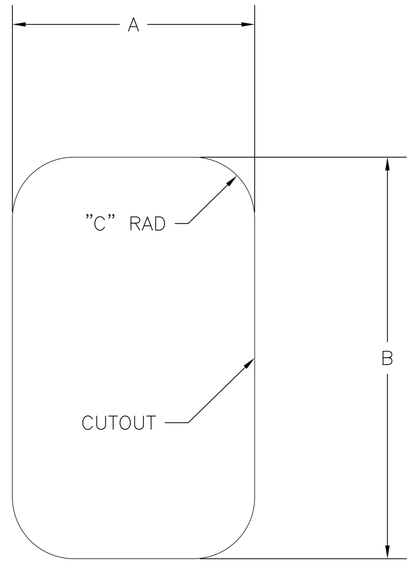


15 – B

RAISED HATCH CUTOUTS

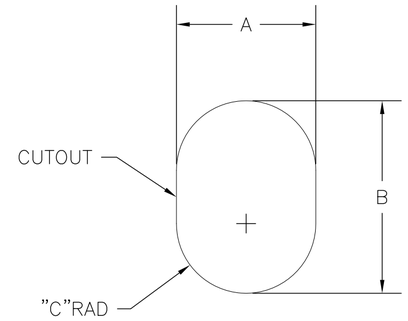


| P/N | A | B | C |
|---|---|---|---|
| 19 | 15–1/2" | 23–1/2" | 7–3/4" |
| | | | |

15 – C

HINGED MANHOLE CUTOUT

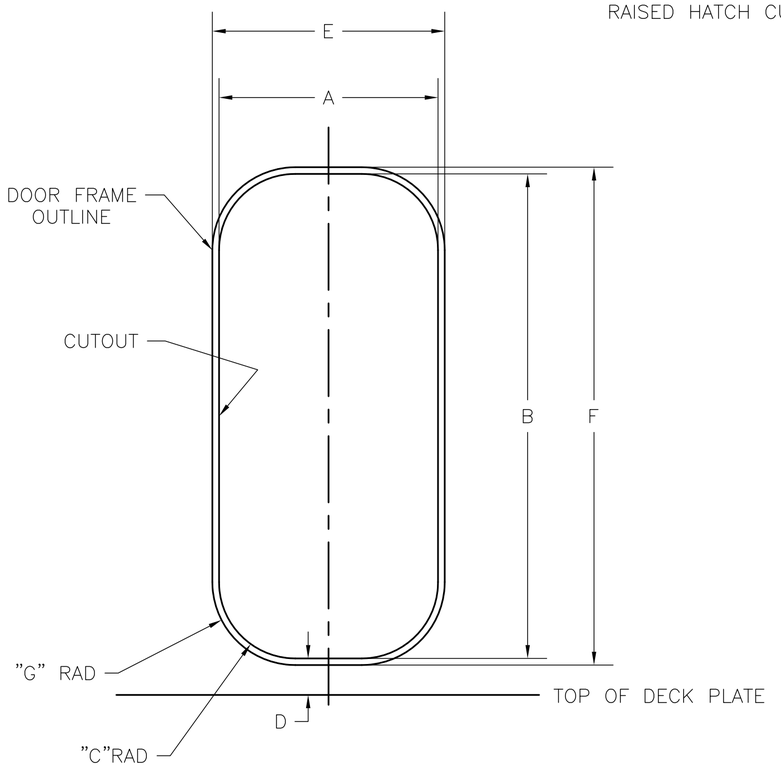


| P/N | A | B | C | D | E | F | G |
|---|---|---|---|---|---|---|---|
| 2, 3, 10, 11, 21 | 33" | 73" | 11–1/2" | 5–1/2" | 35" | 75" | 12–1/2" |
| 12, 13, 14, 15, 16, 17 | 33–1/8" | 73–1/8" | 8–11/16" | 5–1/2" | 35–1/8" | 75–1/8" | 9–11/16" |
| 4, 18, 20, 22 | 37" | 73" | 11–1/2" | 5–1/2" | 39" | 75" | 12–1/2" |
| | | | | | | | |

15 – A

DOOR FRAME ARRANGEMENTS

C 2

| | | | | |
|---|---|---|---|---|
| MMC DWG NO: 0201–167–01 | | | | |
| USCG APPRV: | DATE: | SIZE C | FSCM 81340 | DRAWING NO. 175–WLM–167–001 REV. E |
| ABS APPRV: | DATE: | SCALE AS NOTED | | 15 OF 17 |

DWG. NO. 175–WLM–167–001 SH 15 REV E

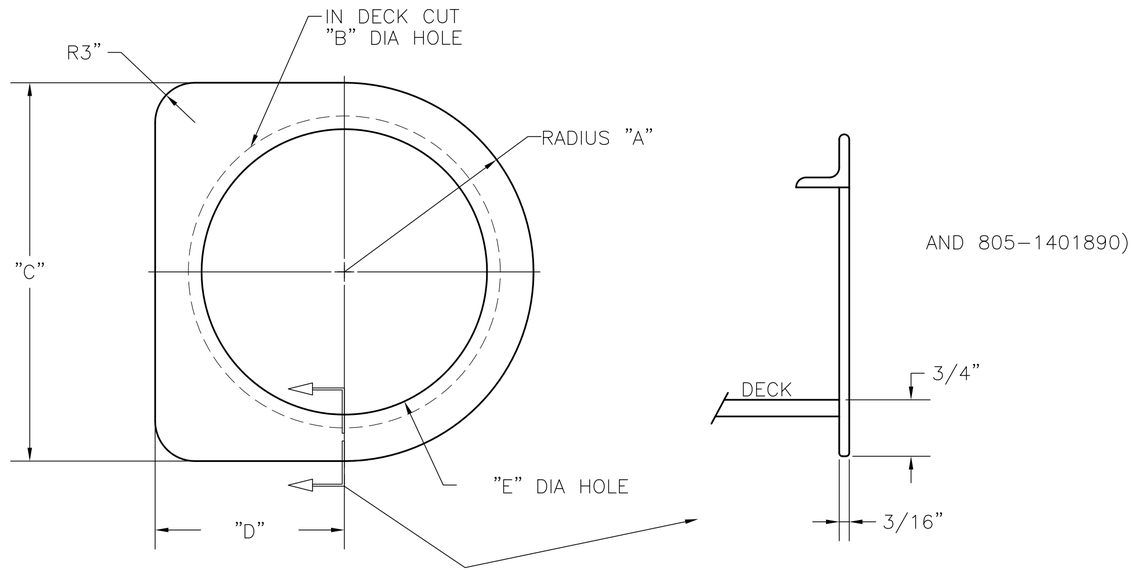


## DETAIL 16-C

RAISED SCUTTLE

| P/N | A | B | C | D | E |
|---|---|---|---|---|---|
| 7 | 14-1/2" | 21 3/8" | 28-1/2" | 14-1/4" | 21" |
| 9 | 12" | 18 3/8" | 24" | 12" | 18" |

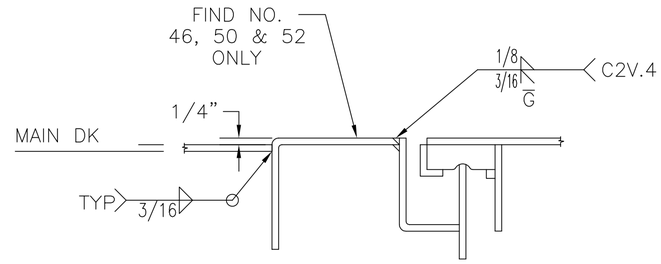


## DETAIL 16-D

TYP WELDING DETAIL FOR FLUSH SCUTTLE
FIND NOS. 46, 50 & 52 ONLY
FROM NAVSEA DWG 803-1623056(REF ONLY)
(N.T.S.)

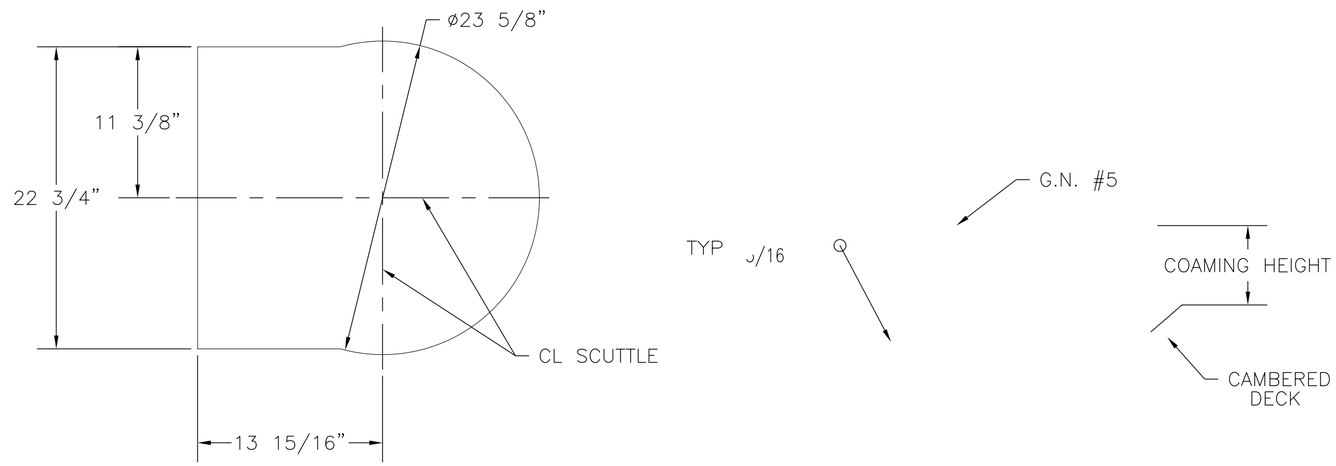


## DETAIL 16-A

21" FLUSH SCUTTLE, P/N 8
SCALE: 1 1/2"=1'-0"

| | | | | | |
|---|---|---|---|---|---|
| MMC DWG NO: 0201-167-01 | | | | | |
| USCG APPRV: | DATE: | SIZE C | FSCM 81340 | DRAWING NO. 175-WLM-167-001 | REV. |
| ABS APPRV: | DATE: | SCALE AS NOTED | | 1 | |

DWG. NO. 175-WLM-67-001 SH REV

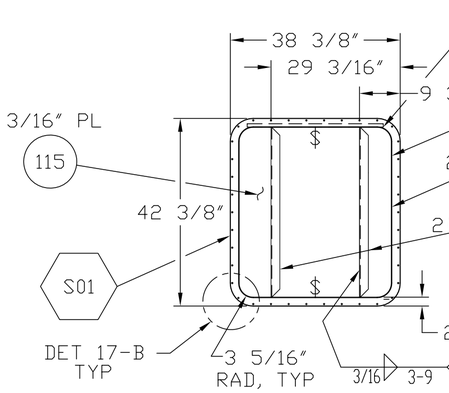


DETAIL 17-A D 5 E 4,6

MAIN DECK UPTAKE ACCESS CLOSURE PLATE
CL BHD FRS 71-72 LKG PORT
SEE DET 17-D FOR BOLT RING
SCALE 1/2" = 1'-0"

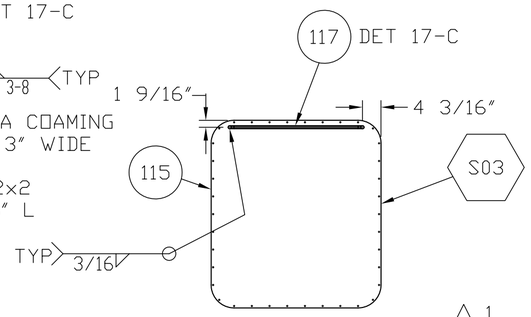


G 1

DETAIL 17-M D 5 E 4,6

MAIN DECK UPTAKE ACCESS CLOSURE PLATE
CL BHD FRS 71-72 LKG STBD
SCALE 1/2" = 1'-0"
(HULLS 552-564)

F 1

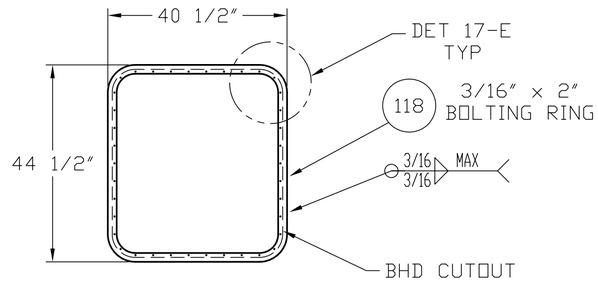


DETAIL 17-D

BOLTING RING FOR
MAIN DECK CLOSURE PLATE
SCALE 1/2" = 1'-0"

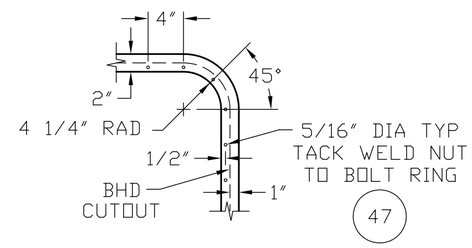


DETAIL 17-E D 3

SCALE 1" = 1'-0"

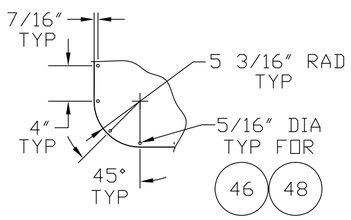


DETAIL 17-B

SCALE 1" = 1'-0"

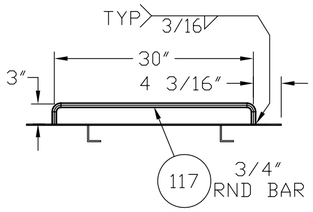


DETAIL 17-C

HANDLE, VIEWED LKG DOWN
SCALE 3/4" = 1'-0"

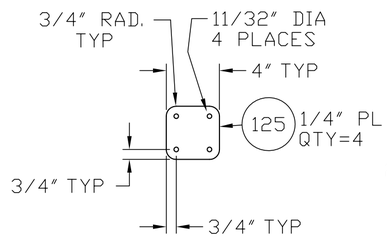


DETAIL 17-N

SCALE 1 1/2" = 1'-0" G 1
(HULL 551 ONLY)

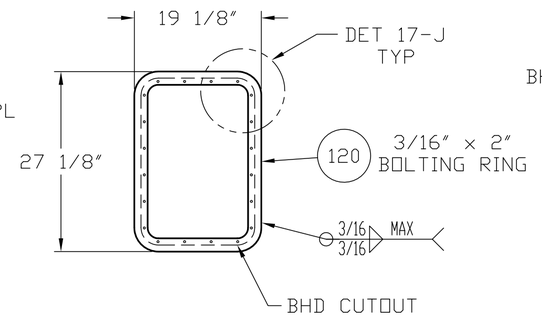


DETAIL 17-H

BOLTING RING FOR
01 LEVEL CLOSURE PLATE
SCALE 3/4" = 1'-0"

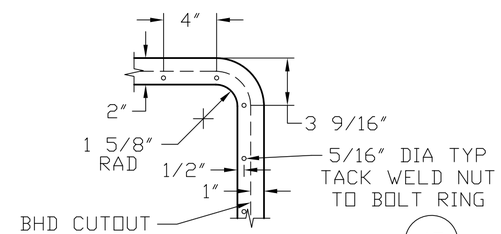


DETAIL 17-J D 3

SCALE 1 1/2" = 1'-0"

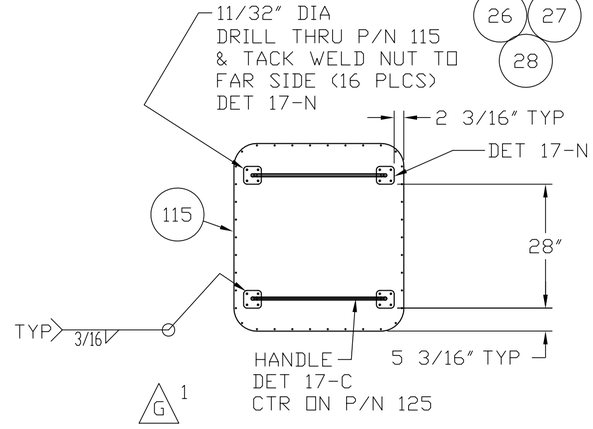


DETAIL 17-P

MAIN DECK UPTAKE ACCESS CLOSURE PLATE
CL BHD FRS 71-72 LKG STBD
SCALE 1/2" = 1'-0"
(HULL 551 ONLY)

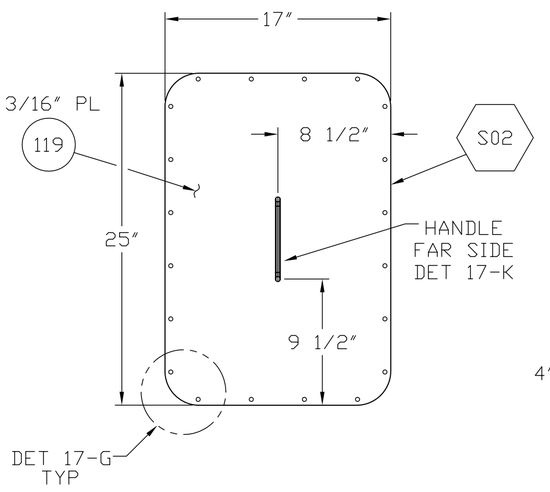


DETAIL 17-F

01 LEVEL CLOSURE PLATE
FR 76 LKG AFT
SEE DET 17-H FOR BOLT RING
SCALE 1 1/2" = 1'-0"

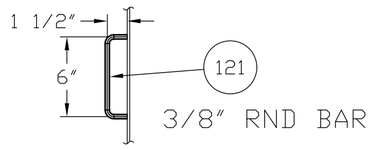


DETAIL 17-K

SCALE 1 1/2" = 1'-0"

F 1 D 5 E 6

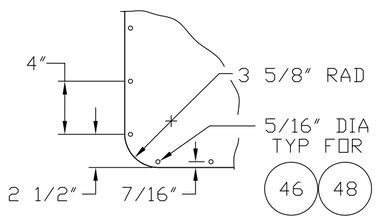


DETAIL 17-G

SCALE 1 1/2" = 1'-0"

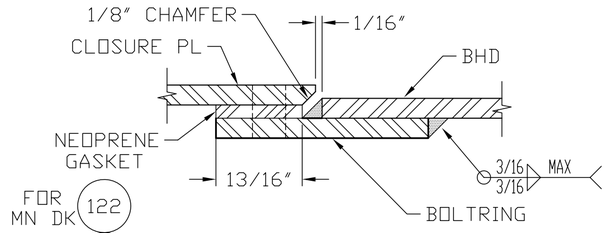


DETAIL 17-L

TYP CLOSURE
BOLTRING & CLOSURE PL
SCALE 1:1

C 2,14

## NOTES

1) MATCH DRILL CLOSURE PLATES AND BOLTING RINGS.
2) MAKE UP RING AND PLATE USING HARDWARE, THEN TACK NUTS TO RING.
3) USE CLOSURE PLATES TO TEMPLATE 13/16" WIDE GASKETS, P/Ns 122 & 123, FROM P/N 49.

| | | | |
|---|---|---|---|
| MMC DWG NO. 0201-167-001 | | | |
| USCG APPRV: | DATE: | SIZE C | FSCM 81340 | DRAWING NO. 175-WLM-167-001 | REV. G |
| ABS APPRV: | DATE: | SCALE AS NOTED | SH 17 OF 17 |

DWG. NO. 175-WLM-167-001 SH 17 REV G