DEPARTMENT OF HOMELAND SECURITY
UNITED STATES COAST GUARD
SHORE INFRASTRUCTURE LOGISTICS COMMAND

SPECIFICATIONS
for
NEW HOME PORT FOR USCG CUTTER EAGLE
Coast Guard Museum – USCGC EAGLE
at
CITY PIER
New London, CT

PSN 16190401

GLASS.DAVID.N.1273006709 Digitally signed by GLASS.DAVID.N.1273006709 Date: 2023.05.11 15:05:28 -04'00'

D. CASS
Design Project Manager

D. GLASS
Design Team Supervisor

STATE OF CONNECTICUT
CHARLES W. MARSHALL ROBERTS
32482
LICENSED
PROFESSIONAL ENGINEER
4/28/23

Digitally signed by CAROSOTTO.MICHAEL.P.1021033398 Date: 2023.05.11 14:54:40 -04'00'

Michael Carosotto, PE
Technical Director
(By Direction)

COMMANDING OFFICER
UNITED STATES COAST GUARD
CIVIL ENGINEERING UNIT PROVIDENCE
475 KILVERT STREET, SUITE 100
WARWICK, RHODE ISLAND 02886

PROJECT TABLE OF CONTENTS

-- End of Project Table of Contents --

DOCUMENT 00 01 15

LIST OF DRAWINGS

PART 1 GENERAL

1.1 SUMMARY

This section lists the drawings for the project which will be provided.

1.2 CONTRACT DRAWINGS

Contract drawings are as follows:

SHEET ID	SHEET NO.	SHEET TITLE
G-001	1	COVER SHEET
G-101	2	NOTES
C-101	3	SITE PLAN
C-102	4	CIVIL PLAN
C-103	5	PROPOSED DREDGE PLAN
C-301	6	PROPOSED DREDGE SECTIONS
S-101	7	EXISTING/DEMOLITION PIER PLAN AND SECTION
S-102	8	PROPOSED PIER PLAN AND SECTION
S-103	9	FENDER CUSHION PLANS
S-104	10	FORCE PROTECTION PLAN
S-501	11	DETAILS
S-502	12	DETAILS
P-101	13	PLUMBING SITE PLAN
P-501	14	PLUMBING DETAILS
P-502	15	RAILROAD DETAILS
E-001	16	ELECTRICAL LEGEND, NOTES, AND ABBREVIATIONS
E-101	17	ELECTRICAL SITE PLAN
E-401	18	ELECTRICAL PARTIAL PLAN
E-501	19	SP DETAILS

-- End of Document --

SECTION 01 11 00

SUMMARY OF WORK

PART 1 GENERAL

1.1 WORK COVERED BY CONTRACT DOCUMENTS

1.1.1 Project Description

The work includes but is not limited to berthing upgrades which include the installation of three sections of timber fender piles and associated wales, all located on the south side of City Pier. Three new sea cushions will be added to the south side of the pier, ten new 30 ton bollards with concrete pedestals, and shear plates at the expansion joints will be installed as indicated on the proposed work site plan. The existing bench on the south side of the pier will be modified and relocated to enable a heat traced water and sewer line to run out to the new berth location. A new sewer pump station and water vault will be located adjacent to the octagon building. The water will connect into the nearby City line. The existing berth on the south side will also be dredged to enable USCGC EAGLE to be berthed further inshore. The dredged material will be disposed of at an upland disposal facility. Based on initial samples the amended samples should be able to be used for beneficial reuse at a nearby site in Connecticut. Additional security features will also be installed including security barriers, additional lighting, CCTV cameras, and Internet.

Alternate Bid Items
The two alternate bid items below are two different routes for the sewer force main to take to get into a gravity sewer system from the proposed sewer pump station.

1. Sewer Pipe to Manhole: The sewer force main will run towards the under construction National Coast Guard Museum (NCGM) building and connect into the proposed NCGM gravity sewer manhole, as shown on the plans.

2. Sewer Pipe under Rail: The force main would use an abandoned 24" sewer pipe to run under the rail and connect into the City gravity system. There are currently two other force mains in the pipe that would also need to remain as separate lines.

See Sheets C-102 and P-101 for additional information.

1.1.1.1 Location

The work shall be located at City Pier, New London, CT, approximately as indicated. The exact location will be shown by the Contracting Officer.

1.1.1.2 EXISTING WORK

In addition to "FAR 52.236-9, Protection of Existing Vegetation, Structures, Equipment, Utilities, and Improvements":

a. Remove or alter existing work in such a manner as to prevent injury or damage to any portions of the existing work which remain.

b. Repair or replace portions of existing work which have been altered during construction operations to match existing or

adjoining work, as approved by the Contracting Officer. At the completion of operations, existing work shall be in a condition equal to or better than that which existed before new work started.

1.1.1.3 LOCATION OF UNDERGROUND UTILITIES

Obtain digging permits prior to start of excavation by contacting the Contracting Officer 15 calendar days in advance. Scan the construction site with electromagnetic or sonic equipment, and mark the surface of the ground, pier deck or paved surface where existing underground utilities or utilities encased in pier structures are discovered. Verify the elevations of existing piping, utilities,and any type of underground or encased obstruction not indicated to be specified or removed but indicated or discovered during scanning in locations to be traversed by piping, ducts, and other work to be conducted or installed. Verify elevations before installing new work closer than nearest manhole or other structure at which an adjustment in grade can be made.

1.1.1.3.1 Notification Prior to Excavation

Notify the Contracting Officer at least 48 hours prior to starting excavation work.

PART 2 PRODUCTS

Not used.

PART 3 EXECUTION

Not used.

-- End of Section --

SECTION 01 14 00

WORK RESTRICTIONS

PART 1 GENERAL

1.1 SPECIAL SCHEDULING REQUIREMENTS

a. Have materials, equipment, and personnel required to perform the work at the site prior to the commencement of the work.

b. City Pier may be closed by the contractor during the entire construction period. The Contractor shall conduct his operations so as to cause the least possible interference with normal operations of the marina. Access to the marina will be continuously maintained.

c. Permission to interrupt any Activity roads, parking areas, storage areas, access and/or utility service shall be requested in writing a minimum of 15 calendar days prior to the desired date of interruption.

d. The work under this contract requires special attention to the scheduling and conduct of the work in connection with existing operations of the adjacent National Coast Guard Museum (NCGM)Project. Identify on the construction schedule each factor which constitutes a potential interruption to operations.

e. The Contractor shall give proper notification to the contracting officer when operations shall interfere with the normal operations of City Pier, marina, or NCGM Project.

f. The pier load ratings shall be adhered to as determined by the Contracting Officer:

   Uniform Live Load = 250 psf

   Truck Load = AASHTO HS-20 Truck

1.2 CONTRACTOR ACCESS AND USE OF PREMISES

1.2.1 Station Regulations

1.2.1.1 Subcontractors and Personnel Contacts

Ensure that Contractor personnel employed on the Activity become familiar with and obey Activity regulations including safety, fire, traffic and security regulations. Keep within the limits of the work and avenues of ingress and egress. Do not enter any restricted areas unless required to do so and until cleared for such entry. The Contractor's equipment shall be conspicuously marked for identification.

1.2.2 Employee List

The Contractor shall provide to the Contracting Officer, in writing, the names of two designated representatives authorized to request personnel and vehicle passes for employees and subcontractor's employees prior to commencement of work under this contract.

1.2.3 Emergency Response Requirement

All personnel shall take shelter for personal safety in the event of certain emergencies. This policy includes Contractors, Subcontractors, and any person who is employed by the Contractor.

The most appropriate protective action for certain emergencies is to take shelter. Personnel shall immediately seek shelter while an assessment is made of the threat and determinations are being made regarding subsequent actions such as "all clear" or selected building evacuations.

1.2.4 Working Hours

Regular on-site working hours are 0630 to 1600, Monday through Friday, excluding Government holidays, or in accordance with City ordinances.

1.2.5 Work Outside Regular Hours

Work outside regular working hours requires Contracting Officer approval. Make application 7 calendar days prior to such work to allow arrangements to be made by the Government for inspecting the work in progress, giving the specific dates, hours, location, type of work to be performed, contract number and project title. Based on the justification provided, the Contracting Officer may approve work outside regular hours. During periods of darkness, the different parts of the work shall be lighted in a manner approved by the Contracting Officer.

1.2.6 Occupied and Existing Buildings

The Contractor shall be working around existing buildings which are occupied. Do not enter the buildings without prior approval of the Contracting Officer.

The Contractor shall relocate and reset temporary facilities to complete the work, as indicated or otherwise directed by the Contracting Officer.

PART 2 PRODUCTS

Not used.

PART 3 EXECUTION

Not used.

-- End of Section --

SECTION 01 32 00

CONSTRUCTION SCHEDULE/SCHEDULE OF VALUES

PART 1 GENERAL

1.1 SUBMITTALS

Government approval is required for submittals with a "G" designation; submittals not having a "G" designation are for Contractor Quality Control approval. Submit the following in accordance with Section 01 33 00 SUBMITTAL PROCEDURES:

SD-01 Preconstruction Submittals

Construction Schedule/Schedule of Values; G

1.2 CONSTRUCTION SCHEDULE

At the Pre-Construction Conference, submit a Construction Schedule and Schedule of Values in accordance with FAR Clause 52.236.15. The Schedule of Values shall be based on the actual breakdown of the bid price. The cost of insurance shall not be listed as a separate item but included as part of each item of work. The actual cost of bonds may be paid as the first progress payment when a receipt from the bonding company is presented to the Contracting Officer. For contracts under $25,000, a Schedule of Values is not required. In addition, keep the Government Inspector informed daily of the expected delivery dates for major pieces of equipment and materials.

The Contractor shall provide, to the Government representative, on a weekly basis, a construction schedule showing a two-week look ahead.

Construction Schedule/Schedule of Values form shall incorporate at a minimum the following activities:

a. Bonds

b. Mobilization

c. Demobilization

d. Pre-Construction Submittals

e. Work Activities

f. In-Progress Submittals

g. Final Government Inspection

h. Close-Out Submittals; i.e. Testing Balancing Reports, Warranties, Operation and Maintenance Manuals, Posted Instructions

i. As-Built Drawings

j. Factors which Constitute Potential Interruptions to Station Operations

Pre-Construction Submittals are those activities which encompass the obtaining, submission, review and approval of submittals necessary prior to the start of the related site work. Contractor shall annotate all such activities into the progress schedule with their forecasted time periods. These activity periods shall not be exclusive of the contract performance period. No site work shall commence until the respective submittals have been approved.

The value of all major work components within the project shall be identified on the Construction Schedule/Schedule of Values on a unit quantity and unit cost basis, e.g. number of squares and cost per square of roofing, number of lineal feet and cost per lineal foot of conduit, number of panels and cost per panel etc. Lump sum items shall only be paid for when 100% complete.

The Construction Schedule/Schedule of Values as approved by the Government is not a substitute for quantities conveyed by the specification and drawings and those required for a complete job. Omissions and errors on the Construction Schedule/Schedule of Values are the responsibility of the Contractor.

Payments will not be made until the schedule of prices has been submitted to and approved by the Contracting Officer.

1.3 UPDATED SCHEDULES

Update the construction schedule and equipment delivery schedule at monthly intervals or when schedule has been revised. Reflect any changes occurring since the last update. Submit copies of the purchase orders and confirmation of the delivery dates as directed.

PART 2 PRODUCTS

Not used.

PART 3 EXECUTION

3.1 PROGRESS UPDATES

3.1.1 General

A revised Construction Schedule/Schedule of Values shall be issued by the Contractor on a monthly basis. In addition, any revisions to the Construction Schedule/Schedule of Values such as modifications or delays shall be reflected by Contractor submission of an updated Construction Schedule/Schedule of Values.

3.1.2 Modifications

When a modification is issued by the Government, record the modification as the last activity of the Construction Schedule/Schedule of Values and include the value of the modification. Adjust the Schedule of Values to reflect the inclusion of the modification. Revise the Construction Schedule portion of the form to annotate the progress change. Enter all modifications in this manner in sequential order.

-- End of Section --

SECTION 01 33 00

SUBMITTAL PROCEDURES

PART 1 GENERAL

1.1 DEFINITIONS

1.1.1 Submittal(SD)

Shop drawings, product data, samples, and administrative submittals presented for review and approval. Contract Clauses "FAR 52.236-5, Material and Workmanship," paragraph (b) and "FAR 52.236-21, Specifications and Drawings for Construction," paragraphs (d), (e), and (f) apply to all "submittals."

1.1.2 Types of Submittals

All submittals are classified as indicated in paragraph "Submittal Descriptions (SD)". Submittals also are grouped as follows:

a. Shop drawings: As used in this section, drawings, schedules, diagrams, and other data prepared specifically for this contract, by contractor or through contractor by way of subcontractor, manufacturer, supplier, distributor, or other lower tier contractor, to illustrate portion of work.

b. Product data: Preprinted material such as illustrations, standard schedules, performance charts, instructions, brochures, diagrams, manufacturer's descriptive literature, catalog data, and other data to illustrate portion of work, but not prepared exclusively for this contract.

c. Samples: Physical examples of products, materials, equipment, assemblies, or workmanship that are physically identical to portion of work, illustrating portion of work or establishing standards for evaluating appearance of finished work or both.

d. Administrative submittals: Data presented for reviews and approval to ensure that administrative requirements of project are adequately met but not to ensure directly that work is in accordance with design concept and in compliance with contract documents.

1.1.3 Submittal Descriptions (SD)

SD-01 Preconstruction Submittals

Construction Progress Schedule
Submittal register
Schedule of values
Health and safety plan
Work plan
Quality control plan
Environmental protection plan

SD-02 Shop Drawings

Drawings, diagrams and schedules specifically prepared to

illustrate some portion of the work.

Diagrams and instructions from a manufacturer or fabricator for use in producing the product and as aids to the contractor for integrating the product or system into the project.

Drawings prepared by or for the contractor to show how multiple systems and interdisciplinary work will be coordinated.

SD-03 Product Data

Catalog cuts, illustrations, schedules, diagrams, performance charts, instructions and brochures illustrating size, physical appearance and other characteristics of materials or equipment for some portion of the work.

Samples of warranty language when the contract requires extended product warranties.

SD-04 Samples

Physical examples of materials, equipment or workmanship that illustrate functional and aesthetic characteristics of a material or product and establish standards by which the work can be judged.

Color samples from the manufacturer's standard line (or custom color samples if specified) to be used in selecting or approving colors for the project.

Field samples and mock-ups constructed on the project site establish standards by which the ensuring work can be judged. Includes assemblies or portions of assemblies which are to be incorporated into the project and those which will be removed at conclusion of the work.

SD-05 Design Data

Calculations, mix designs, analyses or other data pertaining to a part of work.

SD-06 Test Reports

Report signed by authorized official of testing laboratory that a material, product or system identical to the material, product or system to be provided has been tested in accord with specified requirements. (Testing must have been within three years of date of contract award for the project.)

Report which includes findings of a test required to be performed by the contractor on an actual portion of the work or prototype prepared for the project before shipment to job site.

Report which includes finding of a test made at the job site or on sample taken from the job site, on portion of work during or after installation.

Investigation reports

Daily checklists

Final acceptance test and operational test procedure

SD-07 Certificates

Statements signed by responsible officials of manufacturer of product, system or material attesting that product, system or material meets specification requirements. Must be dated after award of project contract and clearly name the project.

Document required of Contractor, or of a supplier, installer or subcontractor through Contractor, the purpose of which is to further quality of orderly progression of a portion of the work by documenting procedures, acceptability of methods or personnel qualifications.

Confined space entry permits.

SD-08 Manufacturer's Instructions

Preprinted material describing installation of a product, system or material, including special notices and Material Safety Data sheets concerning impedances, hazards and safety precautions.

SD-09 Manufacturer's Field Reports

Documentation of the testing and verification actions taken by manufacturer's representative to confirm compliance with manufacturer's standards or instructions.

Factory test reports.

SD-10 Operation and Maintenance Data

Data intended to be incorporated in operations and maintenance manuals.

SD-11 Closeout Submittals

Documentation to record compliance with technical or administrative requirements or to establish an administrative mechanism.

As-built drawings

Special warranties

Posted operating instructions

Training plan

1.1.4 Approving Authority

Person authorized to approve submittal.

1.1.5 Work

As used in this section, on- and off-site construction required by contract documents, including labor necessary to produce construction and

materials, products, equipment, and systems incorporated or to be incorporated in such construction.

1.2 SUBMITTALS

Submit the following in accordance with the requirements of this section.

SD-01 Preconstruction Submittals

Submittal Register; G

1.3 USE OF SUBMITTAL REGISTER

Prepare and maintain submittal register, as the work progresses. Do not change data in columns (c), (d), (e), and (f) as delivered by government.

1.3.1 Submittal Register

Submit submittal register. Do not change data in columns (c), (d), (e), and (f) as delivered by the government. Verify that all submittals required for project are listed and add missing submittals. Complete the following on the register:

Column (a) Activity Number: Activity number from the project schedule.

Column (b) Transmittal Number: Contractor assigned list of consecutive numbers.

Column (g) Contractor Submit Date: Scheduled date for approving authority to receive submittals.

Column (h) Contractor Approval Date: Date contractor needs approval of submittal.

Column (i) Contractor Material: Date that contractor needs material delivered to contractor control.

1.4 PROCEDURES FOR SUBMITTALS

1.4.1 Reviewing, Certifying, Approving Authority

Government organization shall be responsible for reviewing and certifying that submittals are in compliance with contract requirements. Approving authority on submittals is the Project Manager unless otherwise specified for specific submittal.

1.4.2 Constraints

a. Submittals listed or specified in this contract shall conform to provisions of this section, unless explicitly stated otherwise.

b. Submittals shall be complete for each definable feature of work; components of definable feature interrelated as a system shall be submitted at same time.

c. When acceptability of a submittal is dependent on conditions, items, or materials included in separate subsequent submittals, submittal will be returned without review.

d. Approval of a separate material, product, or component does not imply approval of assembly in which item functions.

1.4.3 Scheduling

a. Coordinate scheduling, sequencing, preparing and processing of submittals with performance of work so that work will not be delayed by submittal processing. Allow for potential requirements to resubmit.

b. Except as specified otherwise, allow review period, beginning with receipt by approving authority, that includes at least 10 working days. Period of review for each resubmittal is the same as for initial submittal.

1.4.4 Variations

Variations from contract requirements require Government approval pursuant to contract Clause entitled "FAR 52.236-21, Specifications and Drawings for Construction" and will be considered where advantageous to government.

1.4.4.1 Considering Variations

Discussion with contracting officer prior to submission, will help ensure functional and quality requirements are met and minimize rejections and resubmittals. When contemplating a variation which results in lower cost, consider submission of the variation as a Value Engineering Change Proposal (VECP).

1.4.4.2 Proposing Variations

When proposing variation, deliver written request to the contracting officer, with documentation of the nature and features of the variation and why the variation is desirable and beneficial to government. If lower cost is a benefit, also include an estimate of the cost saving. In addition to documentation required for variation, include the submittals required for the item. Clearly mark the proposed variation in all documentation.

1.4.4.3 Warranting That Variation are Compatible

When delivering a variation for approval, contractor warrants that this contract has been reviewed to establish that the variation, if incorporated, will be compatible with other elements of work.

1.4.4.4 Review Schedule is Modified

In addition to normal submittal review period, a period of 5 working days will be allowed for consideration by the Government of submittals with variations.

1.4.5 Contractor's Responsibilities

a. Determine and verify field measurements, materials, field construction criteria; review each submittal; and check and coordinate each submittal with requirements of the work and contract documents.

b. Transmit submittals to Contracting Officer in accordance with schedule on approved Submittal Register, and to prevent delays in the work,

delays to government, or delays to separate contractors.

c. Advise contracting officer of variation, as required by paragraph entitled "Variations."

d. Correct and resubmit submittal as directed by approving authority. When resubmitting disapproved transmittals or transmittals noted for resubmittal, the contractor shall provide copy of that previously submitted transmittal including all reviewer comments for use by approving authority. Direct specific attention in writing or on resubmitted submittal, to revisions not requested by approving authority on previous submissions.

e. Furnish additional copies of submittal when requested by contracting officer, to a limit of 20 copies per submittal.

f. Complete work which must be accomplished as basis of a submittal in time to allow submittal to occur as scheduled.

g. Ensure no work has begun until submittals for that work have been returned as "approved," except to the extent that a portion of work must be accomplished as basis of submittal.

1.4.6 Government Responsibilities

a. Note date on which submittal was received from contractor on each Contract Item Approval Request Form.

b. Review each submittal; and check and coordinate each submittal with requirements of work and contract documents.

c. Review submittals for conformance with project design concepts and compliance with contract documents.

d. Ensure that material is clearly legible.

e. Review submittals for approval within scheduling period specified and only for conformance with project design concepts and compliance with contract documents.

f. Identify returned submittals with one of the actions defined in paragraph entitled "Actions Possible" and with markings appropriate for action indicated.

1.4.7 Actions Possible

Submittals will be returned with one of the following notations:

a. Submittals marked "approved" "approved as submitted" authorize contractor to proceed with work covered.

b. Submittals marked "approved" "see below" authorize contractor to proceed with work as noted provided contractor takes no exception to the notations.

c. Submittals marked "disapproved" indicate submittal is incomplete or does not comply with design concept or requirements of the contract documents and shall be resubmitted with appropriate changes. No work shall proceed for this item until resubmittal is approved.

1.5 FORMAT OF SUBMITTALS

1.5.1 Transmittal Form

Transmit electronically each submittal, unless otherwise noted in the submittal register and/or where electronic submission is not feasible (i.e. samples), to office of approving authority. The maximum file size that may be emailed is 10 MB; anything larger must be submitted hard copy or on a CD. Transmit submittals with transmittal form prescribed by contracting officer and standard for project. The transmittal form shall identify contractor, indicate date of submittal, and include information prescribed by transmittal form and required in paragraph entitled "Identifying Submittals." Process transmittal forms to record actions regarding sample panels and sample installations. Note: Submittals requiring hard copy submission shall be provided with carbon copy transmittal form provided by the government.

1.5.2 Identifying Submittals

Identify submittals, except sample panel and sample installation, with the following information on each separate component of each submittal and transmittal form. The maximum file size for electronic submittals shall be no larger than 10 MB. Identify each copy of each submittal identically, with the following:

a. Project title and location.

b. Construction contract number.

c. Section number of the specification section by which submittal is required.

d. Submittal description (SD) number of each component of submittal.

e. When a resubmission, alphabetic suffix on submittal description, for example, SD-10A, to indicate resubmission.

f. Name, address, and telephone number of subcontractor, supplier, manufacturer and any other second tier contractor associated with submittal.

g. Product identification and location in project.

1.5.3 Format for Product Data

a. Present product data submittals for each section. Include table of contents, listing page and catalog item numbers for product data.

b. Indicate, by prominent notation, each product which is being submitted; indicate specification section number and paragraph number to which it pertains.

c. Supplement product data with material prepared for project to satisfy submittal requirements for which product data does not exist. Identify this material as developed specifically for project.

1.5.4 Format for Shop Drawings

a. Shop drawings shall not be less than 8 1/2 by 11 inches nor more than 30 by 42 inches.

b. Present 8 1/2 by 11 inches sized shop drawings as part of the submittals required by section. Present larger drawings in sets.

c. Include on each drawing the drawing title, number, date, and revision numbers and dates, in addition to information required in paragraph entitled "Identifying Submittals."

d. Dimension drawings, except diagrams and schematic drawings; prepare drawings demonstrating interface with other trades to scale. Shop drawing dimensions shall be the same unit of measure as indicated on the contract drawings. Identify materials and products for work shown.

1.5.5 Format of Samples

a. Furnish samples in sizes below, unless otherwise specified or unless the manufacturer has prepackaged samples of approximately same size as specified:

(1) Sample of Equipment or Device: Full size.

(2) Sample of Materials Less Than 2 by 3 inches: Built up to 8 1/2 by 11 inches.

(3) Sample of Materials Exceeding 8 1/2 by 11 inches: Cut down to 8 1/2 by 11 inches and adequate to indicate color, texture, and material variations.

(4) Sample of Linear Devices or Materials: 10 inch length or length to be supplied, if less than 10 inches. Examples of linear devices or materials are conduit and handrails.

(5) Sample of Non-Solid Materials: Pint. Examples of non-solid materials are sand and paint.

(6) Color Selection Samples: 2 by 4 inches.

(7) Sample Panel: 4 by 4 feet.

(8) Sample Installation: 100 square feet.

b. Samples Showing Range of Variation: Where variations are unavoidable due to nature of the materials, submit sets of samples of not less than three units showing extremes and middle of range.

c. Reusable Samples: Incorporate returned samples into work only if so specified or indicated. Incorporated samples shall be in undamaged condition at time of use.

d. Recording of Sample Installation: Note and preserve the notation of area constituting sample installation but remove notation at final clean up of project.

e. When color, texture or pattern is specified by naming a particular manufacturer and style, include one sample of that manufacturer and

style, for comparison.

1.5.6 Format of Administrative Submittals

a. When submittal includes a document which is to be used in project or become part of project record, other than as a submittal, do not apply contractor's approval stamp to document, but to a separate sheet accompanying document.

b. Operation and Maintenance Manual Data: Submit in accordance with Section 01781, "Operation and Maintenance Data." Include components required in that section and the various technical sections.

1.6 QUANTITY OF SUBMITTALS

1.6.1 Number of Copies of Product Data

a. When hard copy submission is required, submit four copies of submittals of product data.

1.6.2 Number of Copies of Shop Drawings

Submit shop drawings in compliance with quantity requirements specified for product data.

1.6.3 Number of Samples

a. Submit two samples, or two sets of samples showing range of variation, of each required item. One approved sample or set of samples will be retained by approving authority and one will be returned to contractor.

b. Submit one sample panel. Include components listed in technical section or as directed.

c. Submit one sample installation, where directed.

d. Submit one sample of non-solid materials.

1.6.4 Number of Copies of Administrative Submittals

a. Unless otherwise specified, submit administrative submittals compliance with quantity requirements specified for product data.

b. Submit administrative submittals required under "SD-19 Operation and Maintenance Manuals" to conform to Section 01 78 23, "Operation and Maintenance Data."

PART 2 PRODUCTS

Not used.

PART 3 EXECUTION

Not used.

-- End of Section --

SUBMITTAL REGISTER

CONTRACT NO.

TITLE AND LOCATION
New Home Port For USCG Cutter EAGLE, New London, CT

CONTRACTOR

ACTIVITY NO	TRANSMITTAL NO	SPEC SECT	DESCRIPTION ITEM SUBMITTED	PARAG # RAPH	CLASSIFICATION	GOVT OR A/E REVWR	CONTRACTOR: SCHEDULE DATES			CONTRACTOR ACTION			APPROVING AUTHORITY				MAILED TO CONTR/ DATE RCD FRM APPR AUTH	REMARKS
							SUBMIT	APPROVAL NEEDED BY	MATERIAL NEEDED BY	ACTION CODE	DATE OF ACTION	DATE FWD TO APPR AUTH/ DATE RCD FROM CONTR	DATE FWD TO OTHER REVIEWER	DATE RCD FROM OTH REVIEWER	ACTION CODE	DATE OF ACTION		
(a)	(b)	(c)	(d)	(e)	(f)		(g)	(h)	(i)	(j)	(k)	(l)	(m)	(n)	(o)	(p)	(q)	(r)
		01 32 00	SD-01 Preconstruction Submittals															
			Construction Schedule/Schedule	3.1.1	G													
			of Values															
		01 33 00	SD-01 Preconstruction Submittals															
			Submittal Register		G													
		01 35 26	SD-01 Preconstruction Submittals															
			Accident Prevention Plan (APP)	1.7	G													
			Activity Hazard Analysis (AHA)	1.8	G													
			Crane Critical Lift Plan	1.7.1	G													
			Crane Operators	1.6.1.2	G													
			SD-06 Test Reports															
			Notifications and Reports	1.12	G													
			Accident Reports	1.12.2	G													
			Crane Reports	1.12.3	G													
			SD-07 Certificates															
			Confined Space Entry Permit	1.9	G													
			Hot Work Permit	1.9	G													
			License Certificates	1.14	G													
			Contractor Safety Self-Evaluation	1.4	G													
			Checklist															
			Contractor Safety Self-Evaluation	1.4	G													
			Checklist															
			Third Party Certification of	1.12.5	G													
			Barge-Mounted Mobile Cranes															
			Certificate of Compliance (Crane)	1.6.1.2	G													

SUBMITTAL REGISTER

CONTRACT NO.

TITLE AND LOCATION
New Home Port For USCG Cutter EAGLE, New London, CT

CONTRACTOR

ACTIVITY NO	TRANSMITTAL NO	SPEC SECT	DESCRIPTION ITEM SUBMITTED	PARAGRAPH #	CLASSIFICATION	GOVT OR A/E REVWR	CONTRACTOR: SCHEDULE DATES			CONTRACTOR ACTION			APPROVING AUTHORITY				MAILED TO CONTR/ DATE RCD FRM APPR AUTH	REMARKS
							SUBMIT	APPROVAL NEEDED BY	MATERIAL NEEDED BY	ACTION CODE	DATE OF ACTION	DATE FWD TO APPR AUTH/ DATE RCD FROM CONTR	DATE FWD TO OTHER REVIEWER	DATE RCD FROM OTH REVIEWER	ACTION CODE	DATE OF ACTION		
(a)	(b)	(c)	(d)	(e)	(f)		(g)	(h)	(i)	(j)	(k)	(l)	(m)	(n)	(o)	(p)	(q)	(r)
		01 35 26	Machinery & Mechanized	3.6.3	G													
			Equipment Certification Form															
		01 50 00	SD-01 Preconstruction Submittals															
			Construction site plan		G													
			Traffic control plan	3.3.1	G													
		01 57 19	SD-01 Preconstruction Submittals															
			Preconstruction Survey	1.6.1	G													
			Solid Waste Management Permit	1.10	G													
			Regulatory Notifications	1.6.2	G													
			Environmental Protection Plan	1.7	G													
			Dirt and Dust Control Plan		G													
			Employee Training Records	1.6.5	G													
			Environmental Manager	1.6.4	G													
			Qualifications															
			SD-06 Test Reports															
			Laboratory Analysis	3.6.1.1.2	G													
			Inspection Reports		G													
			Solid Waste Management Report	3.6.2.1	G													
			SD-07 Certificates															
			Employee Training Records	1.6.5	G													
			Erosion and Sediment Control	1.6.5	G													
			Inspector															
			SD-11 Closeout Submittals															
			Stormwater Pollution Prevention		G													
			Plan Compliance Notebook															
			Stormwater Notice of Termination		G													

SUBMITTAL REGISTER

CONTRACT NO.

TITLE AND LOCATION
New Home Port For USCG Cutter EAGLE, New London, CT

CONTRACTOR

ACTIVITY NO	TRANSMITTAL NO	SPEC SECT	DESCRIPTION ITEM SUBMITTED	PARAGRAPH #	CLASSIFICATION	GOVT OR A/E REVWR	CONTRACTOR: SCHEDULE DATES			CONTRACTOR ACTION			APPROVING AUTHORITY				MAILED TO CONTR/ DATE RCD FRM APPR AUTH	REMARKS
							SUBMIT	APPROVAL NEEDED BY	MATERIAL NEEDED BY	ACTION CODE	DATE OF ACTION	DATE FWD TO APPR AUTH/ DATE RCD FROM CONTR	DATE FWD TO OTHER REVIEWER	DATE RCD FROM OTH REVIEWER	ACTION CODE	DATE OF ACTION		
(a)	(b)	(c)	(d)	(e)	(f)		(g)	(h)	(i)	(j)	(k)	(l)	(m)	(n)	(o)	(p)	(q)	(r)
		01 57 19	Waste Determination	3.6.1	G													
			Documentation															
			Disposal Documentation for	3.6.3.5	G													
			Hazardous and Regulated Waste															
			Assembled Employee Training	1.6.5	G													
			Records															
			Solid Waste Management Permit	1.10	G													
			Solid Waste Management Report	3.6.2.1	G													
			Hazardous Waste/Debris	3.6.3.1	G													
			Management															
			Regulatory Notifications	1.6.2	G													
			Sales Documentation	3.6.2.1	G													
			Contractor Certification		G													
		01 78 00	SD-03 Product Data															
			As-Built Record of Equipment		G													
			and Materials															
			Warranty Management Plan		G													
			Final Cleaning		G													
			SD-08 Manufacturer's Instructions															
			Preventative Maintenance		G													
			Condition Monitoring (Predictive		G													
			Testing)															
			Inspection		G													
			Instructions		G													
			SD-11 Closeout Submittals															
			Record Drawings	1.2	G													

SUBMITTAL REGISTER

CONTRACT NO.

TITLE AND LOCATION
New Home Port For USCG Cutter EAGLE, New London, CT

CONTRACTOR

ACTIVITY NO	TRANSMITTAL NO	SPEC SECT	DESCRIPTION ITEM SUBMITTED	PARAGRAPH #	CLASSIFICATION	GOVT OR A/E REVWR	CONTRACTOR: SCHEDULE DATES			CONTRACTOR ACTION			APPROVING AUTHORITY				MAILED TO CONTR/ DATE RCD FRM APPR AUTH	REMARKS
							SUBMIT	APPROVAL NEEDED BY	MATERIAL NEEDED BY	ACTION CODE	DATE OF ACTION	DATE FWD TO APPR AUTH/ DATE RCD FROM CONTR	DATE FWD TO OTHER REVIEWER	DATE RCD FROM OTH REVIEWER	ACTION CODE	DATE OF ACTION		
(a)	(b)	(c)	(d)	(e)	(f)		(g)	(h)	(i)	(j)	(k)	(l)	(m)	(n)	(o)	(p)	(q)	(r)
		01 78 00	Interim Form DD1354		G													
			Checklist for Form DD1354		G													
			Certificate of Coating Compliance		G													
		02 41 00	SD-01 Preconstruction Submittals															
			Demolition Plan	1.2.1	G													
			SD-07 Certificates															
			Demolition Plan	1.2.1	G													
			SD-11 Closeout Submittals															
			Receipts of Approved Disposal		G													
		02 41 01	SD-03 Product Data															
			Submit manufacturer's		G													
			description, design (including															
			calculations) and specifications of															
			siltation curtain material;															
			Submit manufacturer's		G													
			description, design (including															
			calculations) and specifications of															
			debris boom material;															
		03 20 00	SD-02 Shop Drawings															
			Reinforcement	3.1	G													
			SD-03 Product Data															
			Welding	1.3.1	G													
			Material		G													
			SD-04 Samples															
			Epoxy-Coated Bars	2.1.1	G													
			SD-07 Certificates															

SUBMITTAL REGISTER

CONTRACT NO.

TITLE AND LOCATION
New Home Port For USCG Cutter EAGLE, New London, CT

CONTRACTOR

ACTIVITY NO	TRANSMITTAL NO	SPEC SECT	DESCRIPTION ITEM SUBMITTED	PARAGRAPH #	CLASSIFICATION	GOVT OR A/E REVWR	CONTRACTOR: SCHEDULE DATES			CONTRACTOR ACTION			APPROVING AUTHORITY				MAILED TO CONTR/ DATE RCD FRM APPR AUTH	REMARKS
							SUBMIT	APPROVAL NEEDED BY	MATERIAL NEEDED BY	ACTION CODE	DATE OF ACTION	DATE FWD TO APPR AUTH/ DATE RCD FROM CONTR	DATE FWD TO OTHER REVIEWER	DATE RCD FROM OTH REVIEWER	ACTION CODE	DATE OF ACTION		
(a)	(b)	(c)	(d)	(e)	(f)		(g)	(h)	(i)	(j)	(k)	(l)	(m)	(n)	(o)	(p)	(q)	(r)
		03 20 00	Reinforcing Steel	2.1	G													
		03 30 53	SD-02 Shop Drawings															
			Installation Drawings	1.4	G													
			SD-03 Product Data															
			Air-Entraining Admixture	2.2.3.1	G													
			Accelerating Admixture	2.2.3.2	G													
			Water-Reducing or Retarding	2.2.3.3	G													
			Admixture															
			Curing Materials	2.2.10	G													
			Expansion Joint Filler Strips,	2.2.6	G													
			Premolded															
			Joint Sealants - Field Molded	2.2.7	G													
			Sealants															
			Waterstops	2.4.1	G													
			Chemical Floor Hardener	2.4.2	G													
			Batching and Mixing Equipment	3.1.3.3	G													
			Conveying and Placing Concrete	3.2	G													
			Formwork	2.2.8	G													
			Mix Design Data	2.3	G													
			Ready-Mix Concrete	2.3	G													
			Curing Compound	2.4.3	G													
			Mechanical Reinforcing Bar		G													
			Connectors															
			SD-06 Test Reports															
			Aggregates	2.2.2	G													
			Concrete Mixture Proportions	2.1.3	G													

SUBMITTAL REGISTER

CONTRACT NO.

TITLE AND LOCATION
New Home Port For USCG Cutter EAGLE, New London, CT

CONTRACTOR

ACTIVITY NO	TRANSMITTAL NO	SPEC SECT	DESCRIPTION ITEM SUBMITTED	PARAGRAPH #	CLASSIFICATION	GOVT OR A/E REVWR	CONTRACTOR: SCHEDULE DATES			CONTRACTOR ACTION			APPROVING AUTHORITY				MAILED TO CONTR/ DATE RCD FRM APPR AUTH	REMARKS
							SUBMIT	APPROVAL NEEDED BY	MATERIAL NEEDED BY	ACTION CODE	DATE OF ACTION	DATE FWD TO APPR AUTH/ DATE RCD FROM CONTR	DATE FWD TO OTHER REVIEWER	DATE RCD FROM OTH REVIEWER	ACTION CODE	DATE OF ACTION		
(a)	(b)	(c)	(d)	(e)	(f)		(g)	(h)	(i)	(j)	(k)	(l)	(m)	(n)	(o)	(p)	(q)	(r)
		03 30 53	Measurement of Floor Tolerances		G													
			Compressive Strength Testing	3.8.3	G													
			Slump	3.8.3	G													
			Air Content	3.8.3	G													
			Water	2.2.4	G													
			SD-07 Certificates															
			Cementitious Materials	2.2.1	G													
			Pozzolan	2.2.1.2	G													
			CPG for recycled materials or	1.4.1	G													
			appropriate Waiver Form															
			Aggregates	2.2.2	G													
			Delivery Tickets	2.3	G													
			SD-08 Manufacturer's Instructions															
			Chemical Floor Hardener	2.4.2	G													
			Curing Compound	2.4.3	G													
		05 30 00.01	SD-03 Product Data															
			Cleats		G													
			Threaded Rods	3.1.1	G													
			Plates	2.1.2	G													
			Nuts and Washers	2.1.2	G													
			Grout	2.1.3	G													
			Elastomeric Sealants	2.1.4	G													
			Coating System Data Sheets	2.1.5	G													
			SD-05 Design Data															
			Design Calculations	2.1.1	G													
			SD-07 Certificates															

SUBMITTAL REGISTER

CONTRACT NO.

TITLE AND LOCATION
New Home Port For USCG Cutter EAGLE, New London, CT

CONTRACTOR

ACTIVITY NO	TRANSMITTAL NO	SPEC SECT	DESCRIPTION ITEM SUBMITTED	PARAG # RAPH	CLASSIFICATION	GOVT OR A/E REVWR	CONTRACTOR: SCHEDULE DATES			CONTRACTOR ACTION			APPROVING AUTHORITY				MAILED TO CONTR/ DATE RCD FRM APPR AUTH	REMARKS
							SUBMIT	APPROVAL NEEDED BY	MATERIAL NEEDED BY	ACTION CODE	DATE OF ACTION	DATE FWD TO APPR AUTH/ DATE RCD FROM CONTR	DATE FWD TO OTHER REVIEWER	DATE RCD FROM OTH REVIEWER	ACTION CODE	DATE OF ACTION		
(a)	(b)	(c)	(d)	(e)	(f)		(g)	(h)	(i)	(j)	(k)	(l)	(m)	(n)	(o)	(p)	(q)	(r)
		05 30 00.01	Bollards		G													
			Threaded Rods	3.1.1	G													
			Plates	2.1.2	G													
			Nuts and Washers	2.1.2	G													
			Grout	2.1.3	G													
			Elastomeric Sealants	2.1.4	G													
		05 50 13	SD-02 Shop Drawings															
			structural steel		G													
		06 13 33	SD-02 Shop Drawings															
			timberwork	3.2.1	G													
			SD-06 Test Reports															
			Timber preservative inspection	1.4.2	G													
			Delivery inspection list	1.4.3	G													
			SD-07 Certificates															
			MSDS and CIS	1.4.1	G													
		26 05 33	SD-02 Shop Drawings															
			Shore-Tie Station	2.1	G													
			SD-03 Product Data															
			Electrical Shore Tie Power and		G													
			Mound Enclosure															
			Power Receptacle w/ Interlock		G													
			module															
			Time Delay Relay		G													
			Phase Loss Relay		G													
			Communications Receptacle		G													

SUBMITTAL REGISTER

CONTRACT NO.

TITLE AND LOCATION
New Home Port For USCG Cutter EAGLE, New London, CT

CONTRACTOR

ACTIVITY NO	TRANSMITTAL NO	SPEC SECT	DESCRIPTION ITEM SUBMITTED	PARAGRAPH #	CLASSIFICATION	GOVT OR A/E REVWR	CONTRACTOR: SCHEDULE DATES			CONTRACTOR ACTION			APPROVING AUTHORITY				MAILED TO CONTR/ DATE RCD FRM APPR AUTH	REMARKS
							SUBMIT	APPROVAL NEEDED BY	MATERIAL NEEDED BY	ACTION CODE	DATE OF ACTION	DATE FWD TO APPR AUTH/ DATE RCD FROM CONTR	DATE FWD TO OTHER REVIEWER	DATE RCD FROM OTH REVIEWER	ACTION CODE	DATE OF ACTION		
(a)	(b)	(c)	(d)	(e)	(f)		(g)	(h)	(i)	(j)	(k)	(l)	(m)	(n)	(o)	(p)	(q)	(r)
		26 05 33	Circuit Breaker Assembly		G													
			Isolation Transformer		G													
			Cabling		G													
			Raceway		G													
			Line Insulation Monitor		G													
			Surge Protection Device		G													
			SD-06 Test Reports															
			Power Receptacle and Plug		G													
			Assembly Tests															
			Acceptance Checks and Tests		G													
			SD-10 Operation and Maintenance															
			Data															
			Shore Tie Station	2.1	G													
		26 20 00	SD-03 Product Data															
			Receptacles	2.8	G													
			Circuit Breakers	2.9	G													
		26 27 29	SD-03 Product Data															
			Conduit and Fittings	2.2														
			Grounding and Bonding	2.9														
			Equipment															
			Wires and Cables	2.5														
			Outlet Boxes and Covers	2.3														
			Splice and Termination	2.5.5														
			Components															
			Cabinets, Junction Boxes and	2.4														
			Pull Boxes															

SUBMITTAL REGISTER

CONTRACT NO.

TITLE AND LOCATION
New Home Port For USCG Cutter EAGLE, New London, CT

CONTRACTOR

ACTIVITY NO	TRANSMITTAL NO	SPEC SECT	DESCRIPTION ITEM SUBMITTED	PARAGRAPH #	CLASSIFICATION	GOVT OR A/E REVWR	CONTRACTOR: SCHEDULE DATES			CONTRACTOR ACTION			APPROVING AUTHORITY				MAILED TO CONTR/ DATE RCD FRM APPR AUTH	REMARKS
							SUBMIT	APPROVAL NEEDED BY	MATERIAL NEEDED BY	ACTION CODE	DATE OF ACTION	DATE FWD TO APPR AUTH/ DATE RCD FROM CONTR	DATE FWD TO OTHER REVIEWER	DATE RCD FROM OTH REVIEWER	ACTION CODE	DATE OF ACTION		
(a)	(b)	(c)	(d)	(e)	(f)		(g)	(h)	(i)	(j)	(k)	(l)	(m)	(n)	(o)	(p)	(q)	(r)
		26 27 29	Conduit Support	3.1.2.1														
			600-volt Wiring Test	3.3.3	G													
			Grounding System Test	3.3.4	G													
		26 56 00	SD-02 Shop Drawings															
			Luminaire Drawings	1.4.1.1	G													
			Pole Drawings	1.4.1.2	G													
			SD-03 Product Data															
			Luminaires	2.2	G													
			Light Sources	2.3	G													
			LED Drivers	2.4	G													
			Luminaire Warranty	1.6.1	G													
			Lighting Controls Warranty	1.6.2	G													
			Pole Warranty	1.6.3	G													
			Photosensors	2.5.1.1	G													
			Poles	2.6	G													
			Brackets	2.6.2														
			SD-06 Test Reports															
			ANSI/IES LM-79 Test Report	1.4.3	G													
			ANSI/IES LM-80 Test Report	1.4.4	G													
			ANSI/IES TM-21 Test Report	1.4.5	G													
			SD-08 Manufacturer's Instructions															
			Poles	2.6														
			SD-10 Operation and Maintenance															
			Data															
			Lighting System	1.7.1	G													
		27 10 00	SD-02 Shop Drawings															

SUBMITTAL REGISTER

CONTRACT NO.

TITLE AND LOCATION
New Home Port For USCG Cutter EAGLE, New London, CT

CONTRACTOR

ACTIVITY NO	TRANSMITTAL NO	SPEC SECT	DESCRIPTION ITEM SUBMITTED	PARAGRAPH #	CLASSIFICATION	GOVT OR A/E REVWR	CONTRACTOR: SCHEDULE DATES			CONTRACTOR ACTION			APPROVING AUTHORITY				MAILED TO CONTR/	
							SUBMIT	APPROVAL NEEDED BY	MATERIAL NEEDED BY	ACTION CODE	DATE OF ACTION	DATE FWD TO APPR AUTH/ DATE RCD FROM CONTR	DATE FWD TO OTHER REVIEWER	DATE RCD FROM OTH REVIEWER	ACTION CODE	DATE OF ACTION	DATE RCD FRM APPR AUTH	REMARKS
(a)	(b)	(c)	(d)	(e)	(f)		(g)	(h)	(i)	(j)	(k)	(l)	(m)	(n)	(o)	(p)	(q)	(r)
		27 10 00	Telecommunications Drawings	1.6.1.1	G													
			Telecommunications Space	1.6.1.2	G													
			Drawings															
			SD-03 Product Data															
			Telecommunications Cabling	2.3	G													
			Patch Panels	2.4.4	G													
			Equipment Support Frame	2.4.2	G													
			Connector Blocks	2.4.3	G													
			Building protector assemblies		G													
			Protector modules		G													
			IT Distribution Box		G													
			Shore Tie Receptacle Enclosure		G													
			SD-06 Test Reports															
			Telecommunications Cabling	3.4.1	G													
			Testing															
			SD-07 Certificates															
			Telecommunications Contractor	1.6.2.1	G													
			Key Personnel	1.6.2.2	G													
			Manufacturer Qualifications	1.6.2.3	G													
			Test Plan	1.6.3	G													
			SD-08 Manufacturer’s Instructions															
			Building protector assembly		G													
			installation															
			SD-09 Manufacturer’s Field															
			Reports															
			Factory Reel Tests	2.11.1	G													

SUBMITTAL REGISTER

CONTRACT NO.

TITLE AND LOCATION
New Home Port For USCG Cutter EAGLE, New London, CT

CONTRACTOR

ACTIVITY NO	TRANSMITTAL NO	SPEC SECT	DESCRIPTION ITEM SUBMITTED	PARAGRAPH #	CLASSIFICATION	GOVT OR A/E REVWR	CONTRACTOR: SCHEDULE DATES			CONTRACTOR ACTION			APPROVING AUTHORITY				MAILED TO CONTR/ DATE RCD FRM APPR AUTH	REMARKS
							SUBMIT	APPROVAL NEEDED BY	MATERIAL NEEDED BY	ACTION CODE	DATE OF ACTION	DATE FWD TO APPR AUTH/ DATE RCD FROM CONTR	DATE FWD TO OTHER REVIEWER	DATE RCD FROM OTH REVIEWER	ACTION CODE	DATE OF ACTION		
(a)	(b)	(c)	(d)	(e)	(f)		(g)	(h)	(i)	(j)	(k)	(l)	(m)	(n)	(o)	(p)	(q)	(r)
		27 10 00	SD-10 Operation and Maintenance															
			Data															
			Telecommunications Cabling and	1.10.1	G													
			Pathway System															
			SD-11 Closeout Submittals															
			Record Documentation	1.10.2	G													
		31 23 00.00 20	SD-01 Preconstruction Submittals															
			Shoring and Sheeting Plan	1.6.1	G													
			Dewatering work plan	1.6.2	G													
			SD-06 Test Reports															
			Borrow Site Testing		G													
			Fill and backfill	3.11.2.1	G													
			Select material		G													
			Porous fill		G													
			Density tests		G													
			Moisture Content Tests		G													
		31 62 19.13	SD-03 Product Data															
			Piles	2.1.1	G													
			Pile driving equipment	3.1.1	G													
			Hardware		G													
			SD-06 Test Reports															
			Preservative treated piles	1.3.1	G													
			SD-07 Certificates															
			MSDS and CIS	1.3.2	G													
			Preservative Treatment		G													

SUBMITTAL REGISTER

CONTRACT NO.

TITLE AND LOCATION
New Home Port For USCG Cutter EAGLE, New London, CT

CONTRACTOR

ACTIVITY NO	TRANSMITTAL NO	SPEC SECT	DESCRIPTION ITEM SUBMITTED	PARAGRAPH #	CLASSIFICATION	GOVT OR A/E REVWR	CONTRACTOR: SCHEDULE DATES			CONTRACTOR ACTION			APPROVING AUTHORITY				MAILED TO CONTR/ DATE RCD FRM APPR AUTH	REMARKS
							SUBMIT	APPROVAL NEEDED BY	MATERIAL NEEDED BY	ACTION CODE	DATE OF ACTION	DATE FWD TO APPR AUTH/ DATE RCD FROM CONTR	DATE FWD TO OTHER REVIEWER	DATE RCD FROM OTH REVIEWER	ACTION CODE	DATE OF ACTION		
(a)	(b)	(c)	(d)	(e)	(f)		(g)	(h)	(i)	(j)	(k)	(l)	(m)	(n)	(o)	(p)	(q)	(r)
		31 62 19.13	Best Management Practices	1.3.3	G													
			(BMPs)															
		33 11 00	SD-03 Product Data															
			Pipe, Fittings, Joints and	2.1.1	G													
			Couplings															
			Valves	2.1.2	G													
			Valve Boxes	2.1.2.3	G													
			Pipe Restraint	2.2.1	G													
			SD-06 Test Reports															
			Bacteriological Samples	3.3.1.2	G													
			Hydrostatic Test	3.3.1.1														
		33 30 00	SD-03 Product Data															
			Pressure Pipe	2.1.1	G													
			SD-06 Test Reports															
			Tests For Pressure Lines	3.2.1.1	G													
		33 32 16	SD-02 Shop Drawings															
			Fabrication Drawings	2.1														
			Erection/Installation Drawings	2.1														
			SD-03 Product Data															
			Submersible Sewage Grinder	2.2	G													
			nonclog Pumps															
			Pump Performance Curve	2.3	G													
			Pump Motor	2.3	G													
			Pump Control System	2.4	G													
			Wet Well		G													
			Valves	2.7	G													

SUBMITTAL REGISTER

CONTRACT NO.

TITLE AND LOCATION
New Home Port For USCG Cutter EAGLE, New London, CT

CONTRACTOR

ACTIVITY NO	TRANSMITTAL NO	SPEC SECT	DESCRIPTION ITEM SUBMITTED	PARAG # RAPH	CLASSIFICATION	GOVT OR A/E REVWR	CONTRACTOR: SCHEDULE DATES			CONTRACTOR ACTION			APPROVING AUTHORITY				MAILED TO CONTR/	REMARKS
							SUBMIT	APPROVAL NEEDED BY	MATERIAL NEEDED BY	ACTION CODE	DATE OF ACTION	DATE FWD TO APPR AUTH/ DATE RCD FROM CONTR	DATE FWD TO OTHER REVIEWER	DATE RCD FROM OTH REVIEWER	ACTION CODE	DATE OF ACTION	DATE RCD FRM APPR AUTH	
(a)	(b)	(c)	(d)	(e)	(f)		(g)	(h)	(i)	(j)	(k)	(l)	(m)	(n)	(o)	(p)	(q)	(r)
		33 32 16	Access Hatch Covers	2.5.2														
			Pump Test	3.2.1	G													
			SD-10 Operation and Maintenance															
			Data															
			Operation And Maintenance	3.3.1														
			Manuals															
		33 82 00	SD-02 Shop Drawings															
			Telecommunications Outside	1.6.1.1	G													
			Plant															
			Telecommunications Entrance	1.6.1.2	G													
			Facility Drawings															
			SD-03 Product Data															
			Wire and Cable	2.5	G													
			SD-06 Test Reports															
			Acceptance Tests	3.4.1	G													
			Outside Plant Test Plan	1.6.3	G													
			SD-07 Certificates															
			Telecommunications Contractor	1.6.2.1	G													
			Key Personnel	1.6.2.2	G													
			Manufacturer's Qualifications	1.6.2.3	G													
			SD-09 Manufacturer’s Field															
			Reports															
			Factory Reel Test Data	2.10.1	G													
			SD-10 Operation and Maintenance															
			Data															

SUBMITTAL REGISTER

CONTRACT NO.

TITLE AND LOCATION
New Home Port For USCG Cutter EAGLE, New London, CT

CONTRACTOR

ACTIVITY NO	TRANSMITTAL NO	SPEC SECT	DESCRIPTION ITEM SUBMITTED	PARAG # RAPH	CLASSIFICATION	GOVT OR A/E REVWR	CONTRACTOR: SCHEDULE DATES			CONTRACTOR ACTION			APPROVING AUTHORITY				MAILED TO CONTR/ DATE RCD FRM APPR AUTH	REMARKS
							SUBMIT	APPROVAL NEEDED BY	MATERIAL NEEDED BY	ACTION CODE	DATE OF ACTION	DATE FWD TO APPR AUTH/ DATE RCD FROM CONTR	DATE FWD TO OTHER REVIEWER	DATE RCD FROM OTH REVIEWER	ACTION CODE	DATE OF ACTION		
(a)	(b)	(c)	(d)	(e)	(f)		(g)	(h)	(i)	(j)	(k)	(l)	(m)	(n)	(o)	(p)	(q)	(r)
		33 82 00	Telecommunications Outside	1.6.1.1	G													
			Plant (OSP)															
			SD-11 Closeout Submittals															
			Record Documentation	1.8.1	G													
		35 20 23	SD-01 Preconstruction Submittals															
			Construction Operations Plan	1.11	G													
			Pre-dredge Hydrographic Survey	1.13	G													
			Letter of Acceptance of	1.13	G													
			Government's Pre-Dredge															
			Hydrographic Survey and															
			associated dredge volumes															
			SD-11 Closeout Submittals															
			Post Dredge Hydrographic	1.15	G													
			Survey															
			Approved Manifest	1.16	G													
			SD-07 Certificates															
			Notice to Fishermen and Mariners	1.7	G													
		35 59 13.16	SD-02 Shop Drawings															
			Foam Filled Fender		G													
			SD-03 Product Data															
			Galvanized Steel Hardware		G													
			Restraint Chains		G													
			SD-05 Design Data															
			Submit calculations															
			SD-06 Test Reports															
			Fender compression test		G													

SUBMITTAL REGISTER

CONTRACT NO.

TITLE AND LOCATION
New Home Port For USCG Cutter EAGLE, New London, CT

CONTRACTOR

ACTIVITY NO	TRANSMITTAL NO	SPEC SECT	DESCRIPTION ITEM SUBMITTED	PARAG # RAPH	CLASSIFICATION	GOVT OR A/E REVWR	CONTRACTOR: SCHEDULE DATES			CONTRACTOR ACTION			APPROVING AUTHORITY				MAILED TO CONTR/ DATE RCD FRM APPR AUTH	REMARKS
							SUBMIT	APPROVAL NEEDED BY	MATERIAL NEEDED BY	ACTION CODE	DATE OF ACTION	DATE FWD TO APPR AUTH/ DATE RCD FROM CONTR	DATE FWD TO OTHER REVIEWER	DATE RCD FROM OTH REVIEWER	ACTION CODE	DATE OF ACTION		
(a)	(b)	(c)	(d)	(e)	(f)		(g)	(h)	(i)	(j)	(k)	(l)	(m)	(n)	(o)	(p)	(q)	(r)
		35 59 13.16	Fender cyclic-compression test	2.1.6.2	G													
			Fender sustained-load test	2.1.6.3	G													
			Fender pull-through test	2.1.6.4	G													
			Skin thickness core test	2.1.6.5	G													
			Foam Core Density Test		G													
			SD-07 Certificates															
			Galvanized Steel Hardware		G													
			SD-08 Manufacturer's Instructions															
			Installation Instructions	1.4.3	G													
			SD-10 Operation and Maintenance															
			Data															
			Fender Manual	1.4.3	G													

SECTION 01 35 26

GOVERNMENTAL SAFETY REQUIREMENTS

PART 1 GENERAL

1.1 REFERENCES

The publications listed below form a part of this specification to the extent referenced. The publications are referred to within the text by the basic designation only.

AMERICAN SOCIETY OF MECHANICAL ENGINEERS (ASME)

ASME B30.22	(2016) Articulating Boom Cranes
ASME B30.3	(2020) Tower Cranes
ASME B30.5	(2018) Mobile and Locomotive Cranes
ASME B30.8	(2015) Floating Cranes and Floating Derricks

AMERICAN SOCIETY OF SAFETY ENGINEERS (ASSE/SAFE)

ASSE/SAFE A10.32	(2012) Fall Protection
ASSE/SAFE A10.34	(2001; R 2012) Protection of the Public on or Adjacent to Construction Sites
ASSE/SAFE Z359.1	(2016) The Fall Protection Code

NATIONAL FIRE PROTECTION ASSOCIATION (NFPA)

NFPA 10	(2018; ERTA 1-2 2018) Standard for Portable Fire Extinguishers
NFPA 241	(2019) Standard for Safeguarding Construction, Alteration, and Demolition Operations
NFPA 51B	(2019; TIA 20-1) Standard for Fire Prevention During Welding, Cutting, and Other Hot Work
NFPA 70	(2020; ERTA 20-1 2020; ERTA 20-2 2020; TIA 20-1; TIA 20-2; TIA 20-3; TIA 20-4) National Electrical Code
NFPA 70E	(2021) Standard for Electrical Safety in the Workplace

U.S. ARMY CORPS OF ENGINEERS (USACE)

EM 385-1-1	(2014) Safety and Health Requirements Manual

U.S. NATIONAL ARCHIVES AND RECORDS ADMINISTRATION (NARA)

10 CFR 20	Standards for Protection Against Radiation
29 CFR 1910	Occupational Safety and Health Standards
29 CFR 1910.146	Permit-required Confined Spaces
29 CFR 1915	Confined and Enclosed Spaces and Other Dangerous Atmospheres in Shipyard Employment
29 CFR 1919	Gear Certification
29 CFR 1926	Safety and Health Regulations for Construction
29 CFR 1926.1400	Cranes and Derricks in Construction
29 CFR 1926.16	Rules of Construction
29 CFR 1926.500	Fall Protection
CPL 2.100	(1995) Application of the Permit-Required Confined Spaces (PRCS) Standards, 29 CFR 1910.146

1.2 DEFINITIONS

a. Competent Person for Fall Protection. A person who is capable of identifying hazardous or dangerous conditions in the personal fall arrest system or any component thereof, as well as their application and use with related equipment, and has the authority to take prompt corrective measures to eliminate the hazards of falling.

b. High Visibility Accident. Any mishap which may generate publicity or high visibility.

c. Medical Treatment. Treatment administered by a physician or by registered professional personnel under the standing orders of a physician. Medical treatment does not include first aid treatment even through provided by a physician or registered personnel.

d. Operating Envelope. The area surrounding any crane. Inside this "envelope" is the crane, the operator, riggers and crane walkers, rigging gear between the hook and the load, the load and the crane's supporting structure (ground, rail, etc.).

e. Recordable Injuries or Illnesses. Any work-related injury or illness that results in:

(1) Death, regardless of the time between the injury and death, or the length of the illness;

(2) Days away from work (any time lost after day of injury/illness onset);

(3) Restricted work;

(4) Transfer to another job;

(5) Medical treatment beyond first aid;

(6) Loss of consciousness; or

(7) A significant injury or illness diagnosed by a physician or other licensed health care professional, even if it did not result in (1) through (6) above.

f. "USACE" property and equipment specified in USACE EM 385-1-1 should be interpreted as Government property and equipment.

1.3 SUBMITTALS

Government approval is required for submittals with a "G" designation; submittals not having a "G" designation are for Contractor Quality Control approval. Submit the following in accordance with Section 01 33 00 SUBMITTAL PROCEDURES:

SD-01 Preconstruction Submittals

Accident Prevention Plan (APP); G

Activity Hazard Analysis (AHA); G

Crane Critical Lift Plan; G

Proof of qualification for Crane Operators; G

SD-06 Test Reports

Notifications and Reports; G

Submit reports as their incidence occurs, in accordance with the requirements of the paragraph, "Notifications and Reports."

Accident Reports; G

Crane Reports; G

SD-07 Certificates

Confined Space Entry Permit; G

Hot Work Permit; G

License Certificates; G

Contractor Safety Self-Evaluation Checklist; G

Third Party Certification of Barge-Mounted Mobile Cranes; G

Certificate of Compliance (Crane); G

Submit one copy of each permit/certificate attached to each Daily Quality Control Report.

Machinery & Mechanized Equipment Certification Form; G

1.4 CONTRACTOR SAFETY SELF-EVALUATION CHECKLIST

Contracting Officer will provide a "Contractor Safety Self-Evaluation Checklist" to the Contractor at the pre-construction conference. Complete the checklist monthly and submit with each request for payment voucher. An acceptable score of 90 or greater is required. Failure to submit the completed safety self-evaluation checklist or achieve a score of at least 90 may result in retention of up to 10 percent of the voucher. Additionally, provide a Monthly Exposure Report and attach to the monthly billing request. This report is a compilation of employee-hours worked each month for all site workers, both prime and subcontractor. Failure to submit the report may result in retention of up to 10 percent of the voucher. The Contracting Officer will submit a copy of the Contractor Safety Self-Evaluation and Monthly Exposure Report to the local safety and occupational health office.

1.5 REGULATORY REQUIREMENTS

In addition to the detailed requirements included in the provisions of this contract, comply with the most recent edition of USACE EM 385-1-1, and the federal, state, and local laws, ordinances, criteria, rules and regulations. Submit matters of interpretation of standards to the appropriate administrative agency for resolution before starting work. Where the requirements of this specification, applicable laws, criteria, ordinances, regulations, and referenced documents vary, the most stringent requirements govern.

1.6 SITE QUALIFICATIONS, DUTIES AND MEETINGS

1.6.1 Personnel Qualifications

1.6.1.1 Site Safety and Health Officer (SSHO)

The SSHO must meet the requirements of EM 385-1-1 section 1 and ensure that the requirements of 29 CFR 1926.16 are met for the project. Provide a Safety oversight team that includes a minimum of one (1) person at each project site to function as the Site Safety and Health Officer (SSHO). The SSHO or an equally-qualified Designated Representative/alternate shall be at the work site at all times to implement and administer the Contractor's safety program and government-accepted Accident Prevention Plan. The SSHO's training, experience, and qualifications shall be as required by EM 385-1-1 paragraph 01.A.17, entitled SITE SAFETY AND HEALTH OFFICER (SSHO), and all associated sub-paragraphs.

A Competent Person shall be provided for all of the hazards identified in the Contractor's Safety and Health Program in accordance with the accepted Accident Prevention Plan, and shall be on-site at all times when the work that presents the hazards associated with their professional expertise is being performed. Provide the credentials of the Competent Persons(s) to the the Contracting Officer for acceptance in consultation with the Safety Office.

1.6.1.1.1 Contractor Quality Control (QC) Person:

The Contractor Quality Control Person can be the SSHO on this project.

1.6.1.2 Crane Operators

Meet the crane operators requirements in USACE EM 385-1-1, Section 16 and Appendix I. In addition, for mobile cranes with Original Equipment Manufacturer (OEM) rated capacitates of 50,000 pounds or greater, designate crane operators as qualified by a source that qualifies crane operators (i.e., union, a government agency, or an organization that tests and qualifies crane operators). Provide proof of current Certificate of Compliance (Crane) qualification.

1.6.2 Personnel Duties

1.6.2.1 Site Safety and Health Officer (SSHO)

The SSHO shall:

a. Conduct daily safety and health inspections and maintain a written log which includes area/operation inspected, date of inspection, identified hazards, recommended corrective actions, estimated and actual dates of corrections. Attach safety inspection logs to the Contractors' daily report.

b. Conduct mishap investigations and complete required reports. Maintain the OSHA Form 300 and Daily Production reports for prime and sub-contractors.

c. Maintain applicable safety reference material on the job site.

d. Attend the pre-construction conference, pre-work meetings including preparatory inspection meeting, and periodic in-progress meetings.

e. Implement and enforce accepted APPS and AHAs.

f. Maintain a safety and health deficiency tracking system that monitors outstanding deficiencies until resolution. Post a list of unresolved safety and health deficiencies on the safety bulletin board.

g. Ensure sub-contractor compliance with safety and health requirements.

h. Maintain a list of hazardous chemicals on site and their material safety data sheets.

Failure to perform the above duties will result in dismissal of the superintendent, QC Manager, and/or SSHO, and a project work stoppage. The project work stoppage will remain in effect pending approval of a suitable replacement.

1.6.3 Meetings

1.6.3.1 Preconstruction Conference

a. Contractor representatives who have a responsibility or significant role in accident prevention on the project shall attend the preconstruction conference. This includes the project superintendent, site safety and health officer, quality control supervisor, or any other assigned safety and health professionals who participated in the development of the APP (including the Activity Hazard Analyses (AHAs) and special plans, program and procedures associated with it).

b. Discuss the details of the submitted APP to include incorporated plans, programs, procedures and a listing of anticipated AHAs that will be developed and implemented during the performance of the contract. This list of proposed AHAs will be reviewed at the conference and an agreement will be reached between the Contractor and the Contracting Officer's representative as to which phases will require an analysis. In addition, establish a schedule for the preparation, submittal, review, and acceptance of AHAs to preclude project delays.

c. Deficiencies in the submitted APP will be brought to the attention of the Contractor at the preconstruction conference, and the Contractor shall revise the plan to correct deficiencies and re-submit it for acceptance. Do not begin work until there is an accepted APP.

1.6.3.2 Safety Meetings

Conduct and document meetings as required by EM 385-1-1. Attach minutes showing contract title, signatures of attendees and a list of topics discussed to the Contractors' daily report.

1.7 ACCIDENT PREVENTION PLAN (APP)

Use a qualified person to prepare the written site-specific APP. The qualified person should be the SSHO described in 1.6.2.1 or a designee approved by the contracting officer. Prepare the APP in accordance with the format and requirements of USACE EM 385-1-1 and as supplemented herein. Cover all paragraph and subparagraph elements in USACE EM 385-1-1, Appendix A, "Minimum Basic Outline for Accident Prevention Plan". Specific requirements for some of the APP elements are described below. The APP shall be job-specific and address any unusual or unique aspects of the project or activity for which it is written. The APP shall interface with the Contractor's overall safety and health program. Include any portions of the Contractor's overall safety and health program referenced in the APP in the applicable APP element and made site-specific. The Government considers the Prime Contractor to be the "controlling authority" for all work site safety and health of the subcontractors. Contractors are responsible for informing their subcontractors of the safety provisions under the terms of the contract and the penalties for noncompliance, coordinating the work to prevent one craft from interfering with or creating hazardous working conditions for other crafts, and inspecting subcontractor operations to ensure that accident prevention responsibilities are being carried out. The APP shall be signed by the person and firm (senior person) preparing the APP, the Contractor, the on-site superintendent, the designated site safety and health officer, the Contractor Quality control Manager, and any designated CSP or CIH.

Submit the APP to the Contracting Officer 15 calendar days prior to the date of the preconstruction conference for acceptance. Work cannot proceed without an accepted APP.

Once accepted by the Contracting Officer, the APP and attachments will be enforced as part of the contract. Disregarding the provisions of this contract or the accepted APP will be cause for stopping of work, at the discretion of the Contracting Officer, until the matter has been rectified.

Once work begins, changes to the accepted APP shall be made with the knowledge and concurrence of the Contracting Officer, project superintendent, SSHO and quality control manager. Should any severe

hazard exposure, i.e. imminent danger, become evident, stop work in the area, secure the area, and develop a plan to remove the exposure and control the hazard. Notify the Contracting Officer within 24 hours of discovery. Eliminate/remove the hazard. In the interim, take all necessary action to restore and maintain safe working conditions in order to safeguard onsite personnel, visitors, the public (as defined by ASSE/SAFE A10.34,) and the environment.

Copies of the accepted plan will be maintained at the Contracting Officer's office and at the job site.
Continuously review and amend the APP, as necessary, throughout the life of the contract. Incorporate unusual or high-hazard activities not identified in the original APP as they are discovered.

1.7.1 EM 385-1-1 Contents

In addition to the requirements outlined in Appendix A of USACE EM 385-1-1, the following is required:

a. Names and qualifications (resumes including education, training, experience and certifications) of all site safety and health personnel designated to perform work on this project to include the designated site safety and health officer and other competent and qualified personnel to be used such as CSPs, CIHs, STSs, CHSTs. Specify the duties of each position.

b. Qualifications of competent and of qualified persons. As a minimum, designate and submit qualifications of competent persons for each of the following major areas: excavation; scaffolding; fall protection; hazardous energy; confined space; health hazard recognition, evaluation and control of chemical, physical and biological agents; personal protective equipment and clothing to include selection, use and maintenance.

c. Confined Space Entry Plan. Develop a confined and/or enclosed space entry plan in accordance with USACE EM 385-1-1, applicable OSHA standards 29 CFR 1910, 29 CFR 1915, and 29 CFR 1926, OSHA Directive CPL 2.100, and any other federal, state and local regulatory requirements identified in this contract. Identify the qualified person's name and qualifications, training, and experience. Delineate the qualified person's authority to direct work stoppage in the event of hazardous conditions. Include procedure for rescue by contractor personnel and the coordination with emergency responders. (If there is no confined space work, include a statement that no confined space work exists and none will be created.)

d. Crane Critical Lift Plan. Prepare and sign weight handling critical lift plans for lifts over 75 percent of the capacity of the crane or hoist (or lifts over 50 percent of the capacity of a barge mounted mobile crane's hoists) at any radius of lift; lifts involving more than one crane or hoist; lifts of personnel; and lifts involving non-routine rigging or operation, sensitive equipment, or unusual safety risks. Submit 15 calendar days prior to on-site work and include the requirements of USACE EM 385-1-1, paragraph 16.H. and the following:

(1) For lifts of personnel, demonstrate compliance with the requirements of 29 CFR 1926.1400.

(2) For barge mounted mobile cranes, barge stability calculations identifying barge list and trim based on anticipated loading; and load charts based on calculated list and trim. The amount of list and trim shall be within the crane manufacturer's requirements.

e. Fall Protection and Prevention (FP&P) Program Documentation. The program documentation shall be site specific and address all fall hazards in the work place and during different phases of construction. Address how to protect and prevent workers from falling to lower levels when they are exposed to fall hazards above 6 feet. A qualified person for fall protection shall prepare and sign the program documentation. Include fall protection and prevention systems, equipment and methods employed for every phase of work, responsibilities, assisted rescue, self-rescue and evacuation procedures, training requirements, and monitoring methods. Revise the Fall Protection and Prevention Program documentation for lengthy projects, reflecting any changes during the course of construction due to changes in personnel, equipment, systems or work habits. Keep and maintain the accepted Fall Protection and Prevention Program documentation at the job site for the duration of the project. Include the Fall Protection and Prevention Program documentation in the Accident Prevention Plan (APP).

The FP&P Plan shall include a Rescue and Evacuation Plan in accordance with USACE EM 385-1-1, Section 21.M. The plan shall include a detailed discussion of the following: methods of rescue; methods of self-rescue; equipment used; training requirement; specialized training for the rescuers; procedures for requesting rescue and medical assistance; and transportation routes to a medical facility. Include the Rescue and Evacuation Plan in the Fall Protection and Prevention (FP&P) Plan, and as part of the Accident Prevention Plan (APP).

f. Site Demolition Plan. The safety and health aspects prepared in accordance with Section 02 41 00 DEMOLITION and referenced sources. Include engineering survey as applicable.

1.8 ACTIVITY HAZARD ANALYSIS (AHA)

The Activity Hazard Analysis (AHA) format shall be in accordance with USACE EM 385-1-1, Section 1. Submit the AHA for review at least 15 calendar days prior to the start of each phase. Format subsequent AHAs as amendments to the APP. The analysis should be used during daily inspections to ensure the implementation and effectiveness of the activity's safety and health controls.

The AHA list will be reviewed periodically (at least monthly) at the Contractor supervisory safety meeting and updated as necessary when procedures, scheduling, or hazards change.

Develop the activity hazard analyses using the project schedule as the basis for the activities performed. Any activities listed on the project schedule will require an AHA. The AHAs will be developed by the contractor, supplier or subcontractor and provided to the prime contractor for submittal to the Contracting Officer.

1.9 DISPLAY OF SAFETY INFORMATION

Within one calendar day(s) after commencement of work, erect a safety

bulletin board at the job site. Where size, duration, or logistics of project do not facilitate a bulletin board, an alternative method, acceptable to the Contracting Officer, that is accessible and includes all mandatory information for employee and visitor review, shall be deemed as meeting the requirement for a bulletin board. Include and maintain information on safety bulletin board as required by EM 385-1-1, section 01.A.06. Additional items required to be posted include:

a. Confined Space Entry Permit.

b. Hot Work Permit.

1.10 SITE SAFETY REFERENCE MATERIALS

Maintain safety-related references applicable to the project, including those listed in the article "References." Maintain applicable equipment manufacturer's manuals.

1.11 EMERGENCY MEDICAL TREATMENT

Contractors will arrange for their own emergency medical treatment. Government has no responsibility to provide emergency medical treatment.

1.12 NOTIFICATIONS and REPORTS

1.12.1 Accident Notification

Notify the Contracting Officer as soon as practical, but no more than four hours after any accident meeting the definition of Recordable Injuries or Illnesses or High Visibility Accidents, property damage equal to or greater than $2,000, or any weight handling equipment accident. Within notification include contractor name; contract title; type of contract; name of activity, installation or location where accident occurred; date and time of accident; names of personnel injured; extent of property damage, if any; extent of injury, if known, and brief description of accident (to include type of construction equipment used, PPE used, etc.). Preserve the conditions and evidence on the accident site until the Government investigation team arrives on-site and Government investigation is conducted.

1.12.2 Accident Reports

a. Conduct an accident investigation for recordable injuries and illnesses, for Medical Treatment defined in paragraph DEFINITIONS, property damage accidents resulting in at least $20,000 in damages, and near misses as defined in EM 385-1-1, to establish the root cause(s) of the accident. Complete the applicable USACE Accident Report Form 3394, and provide the report to the Contracting Officer within 5 calendar day(s) of the accident. The Contracting Officer will provide copies of any required or special forms.

b. Conduct an accident investigation for any weight handling equipment accident (including rigging gear accidents) to establish the root cause(s) of the accident, complete the WHE Accident Report (Crane and Rigging Gear) form and provide the report to the Contracting Officer within 30 calendar days of the accident. Do not proceed with crane operations until cause is determined and corrective actions have been implemented to the satisfaction of the contracting officer. The Contracting Officer will provide a blank copy of the accident report

form.

1.12.3 Crane Reports

Submit crane inspection reports required in accordance with USACE EM 385-1-1, Appendix I and as specified herein with Daily Reports of Inspections.

1.12.4 Certificate of Compliance

Provide a Certificate of Compliance for each crane entering an activity under this contract (see Contracting Officer for a blank certificate). State within the certificate that the crane and rigging gear meet applicable OSHA regulations (with the Contractor citing which OSHA regulations are applicable, e.g., cranes used in construction, demolition, or maintenance comply with 29 CFR 1926 and USACE EM 385-1-1 Section 16 and Appendix I. Certify on the Certificate of Compliance that the crane operator(s) is qualified and trained in the operation of the crane to be used. Also certify that all of its crane operators working on the DOD activity have been trained in the proper use of all safety devices (e.g., anti-two block devices). Post certifications on the crane.

1.12.5 Third Party Certification of Barge-Mounted Mobile Cranes

Certify barge-mounted mobile cranes in accordance with 29 CFR 1919 by an OSHA accredited person.

1.13 HOT WORK

Submit and obtain a written permit prior to performing "Hot Work" (welding, cutting, etc.) or operating other flame-producing/spark producing devices, from the Contracting Officer. A permit is required from the Explosives Safety Office for work in and around where explosives are processed, stored, or handled. CONTRACTORS ARE REQUIRED TO MEET ALL CRITERIA BEFORE A PERMIT IS ISSUED. Provide at least two (2) twenty (20) pound 4A:20 BC rated extinguishers for normal "Hot Work". All extinguishers shall be current inspection tagged, approved safety pin and tamper resistant seal. It is also mandatory to have a designated FIRE WATCH for any "Hot Work" done at this activity. The Fire Watch shall be trained in accordance with NFPA 51B and remain on-site for a minimum of 30 minutes after completion of the task or as specified on the hot work permit.

When starting work in the facility, require personnel to familiarize themselves with the location of the nearest fire alarm boxes and place in memory the emergency Fire Division phone number. ANY FIRE, NO MATTER HOW SMALL, SHALL BE REPORTED TO THE RESPONSIBLE FIRE DIVISION IMMEDIATELY.

1.14 RADIATION SAFETY REQUIREMENTS

License Certificates for radiation materials and equipment shall be submitted to the Contracting Officer and Radiation Safety Office (RSO) for all specialized and licensed material and equipment that could cause fatal harm to construction personnel or to the construction project.

Workers shall be protected from radiation exposure in accordance with 10 CFR 20. Standards for Protection Against Radiation

Loss of radioactive material shall be reported immediately to the

Contracting Officer.

Actual exposure of the radiographic film or unshielding the source shall not be initiated until after 5 p.m. on weekdays.

In instances where radiography is scheduled near or adjacent to buildings or areas having limited access or one-way doors, no assumptions shall be made as to building occupancy. Where necessary, the Contracting Officer will direct the Contractor to conduct an actual building entry, search, and alert. Where removal of personnel from such a building cannot be accomplished and it is otherwise safe to proceed with the radiography, a fully instructed employee shall be positioned inside such building or area to prevent exiting while external radiographic operations are in process. Transportation of Regulated Amounts of Radioactive Material will comply with 49 CFR, Subchapter C, Hazardous Material Regulations. Local Fire authorities and the site Radiation Safety officer (RSO) shall be notified of any Radioactive Material use.

Transmitter Requirements: The base policy concerning the use of transmitters such as radios, cell phones, etc., must be adhered to by all contractor personnel. They must also obey Emissions control (EMCON) restrictions.

1.15 FACILITY OCCUPANCY CLOSURE

Streets, walks, and other facilities occupied and used by the Government shall not be closed or obstructed without written permission from the Contracting Officer.

1.16 GAS PROTECTION

Contractor shall have one or more employees properly trained and experienced in operation and calibration of gas testing equipment and formally qualified as gas inspectors who shall be on duty during times workers are in confined spaces. Their primary functions shall be to test for gas and operate testing equipment. Unless equipment of constant supervisory type with automatic alarm is employed, gas tests shall be made at least every 2 hours or more often when character of ground or experience indicates gas may be encountered. A gas test shall be made before workmen are permitted to enter the excavation after an idle period exceeding one-half hour.

Readings shall be permanently recorded daily, indicating the concentration of gas, point of test, and time of test. Submit copies of the gas test readings to the Contracting Officer at the end of each work day.

Special requirements, coordination, and precautions will apply to areas that contain a hazardous atmosphere or, by virtue of their use or physical character, may be oxygen deficient. A check by Government is required prior to entering confined space. Surveillance and monitoring shall be required in these types of work spaces by both Contractor and Government personnel.

1.17 HIGH NOISE LEVEL PROTECTION

Operations performed by the Contractor that involve the use of equipment with output of high noise levels (jackhammers, air compressors, and explosive-actuated devices) shall be scheduled during the hours 0800 at 1600. Use of any such equipment shall be approved in writing by the

Contracting Officer prior to commencement of work.

1.18 SEVERE STORM PLAN

In the event of a severe storm warning, the Contractor must:

a. Secure outside equipment and materials and place materials that could be damaged in protected areas.

b. Check surrounding area, including roof, for loose material, equipment, debris, and other objects that could be blown away or against existing facilities.

c. Ensure that temporary erosion controls are adequate.

1.19 CONFINED SPACE ENTRY REQUIREMENTS.

Contractors entering and working in confined spaces while performing general industry work are required to follow the requirements of OSHA 29 CFR 1926 and comply with the requirements in Section 34 of EM 385-1-1, OSHA 29 CFR 1910, and OSHA 29 CFR 1910.146.Contractors entering and working in confined spaces while performing shipyard industry work are required to follow the requirements of OSHA 29 CFR 1915 Subpart B.

PART 2 PRODUCTS

2.1 CONFINED SPACE SIGNAGE

Provide permanent signs integral to or securely attached to access covers for new permit-required confined spaces. Signs wording: "DANGER--PERMIT-REQUIRED CONFINED SPACE - DO NOT ENTER -" in bold letters a minimum of one inch in height and constructed to be clearly legible with all paint removed. The signal word "DANGER" shall be red and readable from 5 feet.

PART 3 EXECUTION

3.1 CONSTRUCTION AND OTHER WORK

Comply with USACE EM 385-1-1, NFPA 70, NFPA 70E, NFPA 241, the APP, the AHA, Federal and State OSHA regulations, and other related submittals and activity fire and safety regulations. The most stringent standard prevails.

PPE is governed in all areas by the nature of the work the employee is performing. Use personal hearing protection at all times in designated noise hazardous areas or when performing noise hazardous tasks. Safety glasses must be carried/available on each person.

Mandatory PPE includes:

a. Hard Hat

b. Appropriate Safety Shoes

c. Reflective Vests

3.1.1 Hazardous Material Use

Each hazardous material must receive approval from the Contracting Office or their designated representative prior to being brought onto the job site or prior to any other use in connection with this contract. Allow a minimum of 10 working days for processing of the request for use of a hazardous material.

3.1.2 Hazardous Material Exclusions

Notwithstanding any other hazardous material used in this contract, radioactive materials or instruments capable of producing ionizing/non-ionizing radiation (with the exception of radioactive material and devices used in accordance with USACE EM 385-1-1 such as nuclear density meters for compaction testing and laboratory equipment with radioactive sources) as well as materials which contain asbestos, mercury or polychlorinated biphenyls, di-isocynates, lead-based paint are prohibited. The Contracting Officer, upon written request by the Contractor, may consider exceptions to the use of any of the above excluded materials. Low mercury lamps used within fluorescent lighting fixtures are allowed as an exception without further Contracting Officer approval. Notify the Radiation Safety Officer (RSO) prior to excepted items of radioactive material and devices being brought on base.

3.1.3 Unforeseen Hazardous Material

The design should have identified materials such as PCB, lead paint, and friable and non-friable asbestos and other OSHA regulated chemicals (i.e. 29 CFR Part 1910.1000). If material, not indicated, that may be hazardous to human health upon disturbance during construction operations is encountered, stop that portion of work and notify the Contracting Officer immediately. Within 14 calendar days the Government will determine if the material is hazardous. If material is not hazardous or poses no danger, the Government will direct the Contractor to proceed without change. If material is hazardous and handling of the material is necessary to accomplish the work, the Government will issue a modification pursuant to "FAR 52.243-4, Changes" and "FAR 52.236-2, Differing Site Conditions."

3.2 PRE-OUTAGE COORDINATION MEETING

Apply for utility outages at least 10 days in advance. As a minimum, the request should include the location of the outage, utilities being affected, duration of outage and any necessary sketches. Special requirements for electrical outage requests are contained elsewhere in this specification section. Once approved, and prior to beginning work on the utility system requiring shut down, attend a pre-outage coordination meeting with the Contracting Officer and the Installation representative to review the scope of work and the lock-out/tag-out procedures for worker protection. No work will be performed on energized electrical circuits unless proof is provided that no other means exist.

3.3 CONTROL OF HAZARDOUS ENERGY (LOCKOUT/TAGOUT)

Ensure that each employee is familiar with and complies with these procedures and USACE EM 385-1-1, Section 12, Control of Hazardous Energy.

3.4 FALL HAZARD PROTECTION AND PREVENTION PROGRAM

Establish a fall protection and prevention program, for the protection of

all employees exposed to fall hazards. Within the program include company policy, identify responsibilities, education and training requirements, fall hazard identification, prevention and control measures, inspection, storage, care and maintenance of fall protection equipment and rescue and evacuation procedures in accordance with ASSE/SAFE Z359.1.

3.4.1 Training

Institute a fall protection training program. As part of the Fall Hazard Protection and Prevention Program, provide training for each employee who might be exposed to fall hazards. Provide training by a competent person for fall protection in accordance with USACE EM 385-1-1, Section 21.B.

3.4.2 Fall Protection Equipment and Systems

Enforce use of the fall protection equipment and systems designated for each specific work activity in the Fall Protection and Prevention Plan and/or AHA at all times when an employee is exposed to a fall hazard. Protect employees from fall hazards as specified in EM 385-1-1, Section 21. In addition to the required fall protection systems, safety skiff, personal floatation devices, life rings etc., are required when working above or next to water in accordance with USACE EM 385-1-1, Paragraphs 21.N through 21.N.04. Personal fall arrest systems are required when working from an articulating or extendible boom, swing stages, or suspended platform. In addition, personal fall arrest systems are required when operating other equipment such as scissor lifts if the work platform is capable of being positioned outside the wheelbase. The need for tying-off in such equipment is to prevent ejection of the employee from the equipment during raising, lowering, or travel. Fall protection must comply with 29 CFR 1926.500, Subpart M, USACE EM 385-1-1 and ASSE/SAFE A10.32.

3.4.2.1 Personal Fall Arrest Equipment

Personal fall arrest equipment, systems, subsystems, and components shall meet ASSE/SAFE Z359.1. Only a full-body harness with a shock-absorbing lanyard or self-retracting lanyard is an acceptable personal fall arrest body support device. Body belts may only be used as a positioning device system (for uses such as steel reinforcing assembly and in addition to an approved fall arrest system). Harnesses shall have a fall arrest attachment affixed to the body support (usually a Dorsal D-ring) and specifically designated for attachment to the rest of the system. Only locking snap hooks and carabiners shall be used. Webbing, straps, and ropes shall be made of synthetic fiber. The maximum free fall distance when using fall arrest equipment shall not exceed 6 feet. The total fall distance and any swinging of the worker (pendulum-like motion) that can occur during a fall shall always be taken into consideration when attaching a person to a fall arrest system.

3.4.3 Horizontal Lifelines

Design, install, certify and use under the supervision of a qualified person horizontal lifelines for fall protection as part of a complete fall arrest system which maintains a safety factor of 2 (29 CFR 1926.500).

3.4.4 Guardrails and Safety Nets

Design, install and use guardrails and safety nets in accordance with EM 385-1-1 and 29 CFR 1926 Subpart M.

3.4.5 Rescue and Evacuation Procedures

When personal fall arrest systems are used, ensure that the mishap victim can self-rescue or can be rescued promptly should a fall occur. Prepare a Rescue and Evacuation Plan and include a detailed discussion of the following: methods of rescue; methods of self-rescue; equipment used; training requirement; specialized training for the rescuers; procedures for requesting rescue and medical assistance; and transportation routes to a medical facility. Include the Rescue and Evacuation Plan within the Activity Hazard Analysis (AHA) for the phase of work, in the Fall Protection and Prevention (FP&P) Plan, and the Accident Prevention Plan (APP).

3.5 SCAFFOLDING

Provide employees with a safe means of access to the work area on the scaffold. Climbing of any scaffold braces or supports not specifically designed for access is prohibited. Access scaffold platforms greater than 20 feet maximum in height by use of a scaffold stair system. Do not use vertical ladders commonly provided by scaffold system manufacturers for accessing scaffold platforms greater than 20 feet maximum in height. The use of an adequate gate is required. Ensure that employees are qualified to perform scaffold erection and dismantling. Do not use scaffold without the capability of supporting at least four times the maximum intended load or without appropriate fall protection as delineated in the accepted fall protection and prevention plan. Stationary scaffolds must be attached to structural building components to safeguard against tipping forward or backward. Give special care to ensure scaffold systems are not overloaded. Side brackets used to extend scaffold platforms on self-supported scaffold systems for the storage of material is prohibited. The first tie-in shall be at the height equal to 4 times the width of the smallest dimension of the scaffold base. Place work platforms on mud sills. Scaffold or work platform erectors shall have fall protection during the erection and dismantling of scaffolding or work platforms that are more than six feet. Delineate fall protection requirements when working above six feet or above dangerous operations in the Fall Protection and Prevention (FP&P) Plan and Activity Hazard Analysis (AHA) for the phase of work.

3.6 EQUIPMENT

3.6.1 Material Handling Equipment

a. Material handling equipment such as forklifts shall not be modified with work platform attachments for supporting employees unless specifically delineated in the manufacturer's printed operating instructions.

b. The use of hooks on equipment for lifting of material must be in accordance with manufacturer's printed instructions.

c. Operators of forklifts or power industrial trucks shall be licensed in accordance with OSHA.

3.6.2 Weight Handling Equipment

a. Equip cranes and derricks as specified in EM 385-1-1, Section 16.

b. Notify the Contracting Officer 15 days in advance of any cranes entering the activity so that necessary quality assurance spot checks can be coordinated. Contractor's operator shall remain with the crane during the spot check.

c. Comply with the crane manufacturer's specifications and limitations for erection and operation of cranes and hoists used in support of the work. Perform erection under the supervision of a designated person (as defined in ASME B30.5). Perform all testing in accordance with the manufacturer's recommended procedures.

d. Comply with ASME B30.5 for mobile and locomotive cranes, ASME B30.22 for articulating boom cranes, ASME B30.3 for construction tower cranes, and ASME B30.8 for floating cranes and floating derricks.

e. Under no circumstance shall a Contractor make a lift at or above 90 percent of the cranes rated capacity in any configuration.

f. When operating in the vicinity of overhead transmission lines, operators and riggers shall be alert to this special hazard and follow the requirements of USACE EM 385-1-1 Section 11 and ASME B30.5 or ASME B30.22 as applicable.

g. Do not crane suspended personnel work platforms (baskets) unless the Contractor proves that using any other access to the work location would provide a greater hazard to the workers or is impossible. Do not lift personnel with a line hoist or friction crane.

h. Inspect, maintain, and recharge portable fire extinguishers as specified in NFPA 10, Standard for Portable Fire Extinguishers.

i. All employees must keep clear of loads about to be lifted and of suspended loads.

j. Use cribbing when performing lifts on outriggers.

k. The crane hook/block must be positioned directly over the load. Side loading of the crane is prohibited.

l. A physical barricade must be positioned to prevent personnel from entering the counterweight swing (tail swing) area of the crane.

m. Certification records which include the date of inspection, signature of the person performing the inspection, and the serial number or other identifier of the crane that was inspected shall always be available for review by Contracting Officer personnel.

n. Written reports listing the load test procedures used along with any repairs or alterations performed on the crane shall be available for review by Contracting Officer personnel.

o. Certify that all crane operators have been trained in proper use of all safety devices (e.g. anti-two block devices).

p. Take steps to ensure that wind speed does not contribute to loss of control of the load during lifting operations. Prior to conducting lifting operations set a maximum wind speed at which a crane can be safely operated based on the equipment being used, the load being lifted, experience of operators and riggers, and hazards on the work

site. This maximum wind speed determination shall be included as part of the activity hazard analysis plan for that operation.

3.6.3 Equipment and Mechanized Equipment

a. Proof of qualifications for operator shall be kept on the project site for review.

b. Manufacture specifications or owner's manual for the equipment shall be on-site and reviewed for additional safety precautions or requirements that are sometimes not identified by OSHA or USACE EM 385-1-1. Incorporate such additional safety precautions or requirements into the AHAs.

c. Submit a Machinery & Mechanized Equipment Certification Form for acceptance by the Contracting Officer prior to being placed into use. A copy of the certification form will be provided during the Pre-construction Conference.

3.6.4 USE OF EXPLOSIVES

Explosives shall not be used or brought to the project site without prior written approval from the Contracting Officer. Such approval shall not relieve the Contractor of responsibility for injury to persons or for damage to property due to blasting operations.

Storage of explosives, when permitted on Government property, shall be only where directed and in approved storage facilities. These facilities shall be kept locked at all times except for inspection, delivery, and withdrawal of explosives.

3.7 EXCAVATIONS

Soil classification must be performed by a competent person in accordance with 29 CFR 1926 and EM 385-1-1.

3.7.1 Utility Locations

All underground utilities in the work area must be positively identified by a third party, independent, private utility locating company in addition to any station locating service and coordinated with the station utility department.

3.7.2 Utility Location Verification

Physically verify underground utility locations, including utility depth, by hand digging using wood or fiberglass handled tools when any adjacent construction work is expected to come within three feet of the underground system.

3.7.3 Utilities Within and Under Concrete, Bituminous Asphalt, and Other Impervious Surfaces

Utilities located within and under concrete slabs or pier structures, bridges, parking areas, and the like, are extremely difficult to identify. Whenever contract work involves chipping, saw cutting, or core drilling through concrete, bituminous asphalt or other impervious surfaces, the existing utility location must be coordinated with station utility departments in addition to location and depth verification by a third

party, independent, private locating company. The third party, independent, private locating company shall locate utility depth by use of Ground Penetrating Radar (GPR), X-ray, bore scope, or ultrasound prior to the start of demolition and construction. Outages to isolate utility systems must be used in circumstances where utilities are unable to be positively identified. The use of historical drawings does not alleviate the contractor from meeting this requirement.

3.8 ELECTRICAL

3.8.1 Portable Extension Cords

Size portable extension cords in accordance with manufacturer ratings for the tool to be powered and protected from damage. Immediately removed from service all damaged extension cords. Portable extension cords shall meet the requirements of EM 385-1-1, NFPA 70E, and OSHA electrical standards.

3.9 WORK IN CONFINED SPACES

Comply with the requirements in Section 34 of USACE EM 385-1-1, OSHA 29 CFR 1910, OSHA 29 CFR 1910.146, OSHA Directive CPL 2.100 and OSHA 29 CFR 1926. Any potential for a hazard in the confined space requires a permit system to be used.

a. Entry Procedures. Prohibit entry into a confined space by personnel for any purpose, including hot work, until the qualified person has conducted appropriate tests to ensure the confined or enclosed space is safe for the work intended and that all potential hazards are controlled or eliminated and documented. (See Section 34 of USACE EM 385-1-1 for entry procedures.) All hazards pertaining to the space shall be reviewed with each employee during review of the AHA.

b. Forced air ventilation is required for all confined space entry operations and the minimum air exchange requirements must be maintained to ensure exposure to any hazardous atmosphere is kept below its' action level.

c. Sewer wet wells require continuous atmosphere monitoring with audible alarm for toxic gas detection.

-- End of Section --

SECTION 01 42 00

SOURCES FOR REFERENCE PUBLICATIONS

PART 1 GENERAL

1.1 REFERENCES

Various publications are referenced in other sections of the specifications to establish requirements for the work. These references are identified in each section by document number, date and title. The document number used in the citation is the number assigned by the standards producing organization (e.g. ASTM B564 Standard Specification for Nickel Alloy Forgings). However, when the standards producing organization has not assigned a number to a document, an identifying number has been assigned for reference purposes.

1.2 ORDERING INFORMATION

The addresses of the standards publishing organizations whose documents are referenced in other sections of these specifications are listed below, and if the source of the publications is different from the address of the sponsoring organization, that information is also provided. Documents listed in the specifications with numbers which were not assigned by the standards producing organization should be ordered from the source by title rather than by number.

AMERICAN ASSOCIATION OF STATE HIGHWAY AND TRANSPORTATION OFFICIALS (AASHTO)
444 North Capital Street, NW, Suite 249
Washington, DC 20001
Ph: 202-624-5800
Fax: 202-624-5806
E-Mail: info@aashto.org
Internet: http://www.aashto.org

AMERICAN INSTITUTE OF STEEL CONSTRUCTION (AISC)
One East Wacker Drive, Suite 700
Chicago, IL 60601-1802
Ph: 312-670-2400
Fax: 312-670-5403
Bookstore: 800-644-2400
E-mail: aisc@ware-pak.com
Internet: http://www.aisc.org

AMERICAN SOCIETY OF CIVIL ENGINEERS (ASCE)
1801 Alexander Bell Drive
Reston, VA 20191
Ph: 703-295-6300; 800-548-2723
E-mail: member@asce.org
Internet: http://www.asce.org

AMERICAN SOCIETY OF SAFETY ENGINEERS (ASSE/SAFE)
1800 East Oakton Street
Des Plaines, IL 60018
Ph: 847-699-2929
Internet: http://www.asse.org

AMERICAN WATER WORKS ASSOCIATION (AWWA)
6666 West Quincy Avenue
Denver, CO 80235-3098
Ph: 303-794-7711
E-mail: distribution@awwa.org
Internet: http://www.awwa.org

AMERICAN WELDING SOCIETY (AWS)
13301 NW 47 Ave
Miami, FL 33054

Ph: 888-WELDING, 305-824-1177, 305-826-6192
Fax: 305-826-6195
E-mail: customer.service@awspubs.com
Internet: http://www.aws.org

AMERICAN WOOD PROTECTION ASSOCIATION (AWPA)
P.O. Box 361784
Birmingham, AL 35236-1784
Ph: 205-733-4077
Fax: 205-733-4075
Internet: http://www.awpa.com

ASTM INTERNATIONAL (ASTM)
100 Barr Harbor Drive, P.O. Box C700
West Conshohocken, PA 19428-2959
Ph: 877-909-2786
Internet: http://www.astm.org

ELECTRONIC COMPONENTS INDUSTRY ASSOCIATION (ECIA)
2214 Rock Hill Rd., Suite 170
Herndon, VA 20170
Ph: 571-323-0294
Fax: 571-323-0245
E-mail: emikoski@ecaus.org
Internet: http://www.ecianow.org/

ILLUMINATING ENGINEERING SOCIETY (IES)
120 Wall Street, 17th Floor
New York, NY 10005-4001
Ph: 212-248-5000
Fax: 212-248-5018
E-mail: IES@IES.org
Internet: http://www.IES.org

INSTITUTE OF ELECTRICAL AND ELECTRONICS ENGINEERS (IEEE)
445 and 501 Hoes Lane
Piscataway, NJ 08854-4141
Ph: 732-981-0060 or 800-701-4333
Fax: 732-562-9667
E-mail: onlinesupport@ieee.org
Internet: http://www.ieee.org

INSULATED CABLE ENGINEERS ASSOCIATION (ICEA)
P.O. Box 1568
Carrollton, GA 30112
E-mail:
http://www.icea.net/Public_Pages/Contact/Email_Contact.html

Internet: http://www.icea.net

MANUFACTURERS STANDARDIZATION SOCIETY OF THE VALVE AND FITTINGS INDUSTRY (MSS)
127 Park Street, NE
Vienna, VA 22180-4602
Ph: 703-281-6613
E-mail: info@mss-hq.com
Internet: http://mss-hq.org/Store/index.cfm

NATIONAL ELECTRICAL CONTRACTORS ASSOCIATION (NECA)
3 Bethesda Metro Center, Suite 1100
Bethesda, MD 20814
Ph: 301-657-3110
Fax: 301-215-4500
Internet: http://www.necanet.org/

NATIONAL ELECTRICAL MANUFACTURERS ASSOCIATION (NEMA)
1300 North 17th Street, Suite 900
Arlington, VA 22209
Ph: 703-841-3200
Internet: http://www.nema.org/

NATIONAL FIRE PROTECTION ASSOCIATION (NFPA)
1 Batterymarch Park
Quincy, MA 02169-7471
Ph: 617-770-3000
Fax: 617-770-0700
Internet: http://www.nfpa.org

NSF INTERNATIONAL (NSF)
789 North Dixboro Road
P.O. Box 130140
Ann Arbor, MI 48105
Ph: 734-769-8010 or 800-NSF-MARK
Fax: 734-769-0109
E-mail: info@nsf.org
Internet: http://www.nsf.org

SOCIETY FOR PROTECTIVE COATINGS (SSPC)
40 24th Street, 6th Floor
Pittsburgh, PA 15222
Ph: 412-281-2331
Fax: 412-281-9992
E-mail: info@sspc.org
Internet: http://www.sspc.org

TELECOMMUNICATIONS INDUSTRY ASSOCIATION (TIA)
1320 N. Courthouse Rd., Suite 200
Arlington, VA 22201
Ph: 703-907-7700
Fax: 703-907-7727
Internet: http://www.tiaonline.org

U.S. ARMY CORPS OF ENGINEERS (USACE)
CRD-C DOCUMENTS available on Internet:
http://www.wbdg.org/ccb/browse_cat.php?c=68
Order Other Documents from:
USACE Publications Depot

Attn: CEHEC-IM-PD
2803 52nd Avenue
Hyattsville, MD 20781-1102
Ph: 301-394-0081
Fax: 301-394-0084
E-mail: pubs-army@usace.army.mil
Internet: http://www.publications.usace.army.mil/
or
http://www.hnc.usace.army.mil/Missions/Engineering/TECHINFO.aspx

U.S. DEPARTMENT OF AGRICULTURE (USDA)
Order AMS Publications from:
AGRICULTURAL MARKETING SERVICE (AMS)
Seed Regulatory and Testing Branch
801 Summit Crossing Place, Suite C
Gastonia, NC 28054-2193
Ph: 704-810-8871
Fax: 704-852-4189
E-mail: seed.ams@usda.gov
Internet: http://www.ams.usda.gov/lsg/seed.htm
Order Other Publications from:
U.S. Department of Agriculture, Rural Utilities Program
USDA Rural Development, Room 4051-S
Mail Stop 1510
1400 Independence Avenue SW
Washington, DC 20250-1510
Phone: (202) 720-9540
TTY: (800) 877-8339 (Federal Relay Service)
Fax: (202) 720-1725
Internet: http://www.rurdev.usda.gov/utilities_lp.html

U.S. DEPARTMENT OF DEFENSE (DOD)
Order DOD Documents from:
Room 3A750-The Pentagon
1400 Defense Pentagon
Washington, DC 20301-1400
Ph: 703-571-3343
FAX: 215-697-1462
E-mail: customerservice@ntis.gov
Internet: http://www.ntis.gov
Obtain Military Specifications, Standards and Related Publications from:
Acquisition Streamlining and Standardization Information System (ASSIST)
Department of Defense Single Stock Point (DODSSP)
Document Automation and Production Service (DAPS)
Building 4/D
700 Robbins Avenue
Philadelphia, PA 19111-5094
Ph: 215-697-6396 - for account/password issues
Internet: http://assist.daps.dla.mil/online/start/; account registration required
Obtain Unified Facilities Criteria (UFC) from:
Whole Building Design Guide (WBDG)
National Institute of Building Sciences (NIBS)
1090 Vermont Avenue NW, Suite 700
Washington, CD 20005
Ph: 202-289-7800
Fax: 202-289-1092

Internet: http://www.wbdg.org/references/docs_refs.php

U.S. ENVIRONMENTAL PROTECTION AGENCY (EPA)
Ariel Rios Building
1200 Pennsylvania Avenue, N.W.
Washington, DC 20004
Ph: 202-272-0167
Internet: http://www2.epa.gov/libraries
--- Some EPA documents are available only from:
National Technical Information Service (NTIS)
5301 Shawnee Road
Alexandria, VA 22312
Ph: 703-605-6050 or 1-688-584-8332
Fax: 703-605-6900
E-mail: info@ntis.gov
Internet: http://www.ntis.gov

U.S. FEDERAL AVIATION ADMINISTRATION (FAA)
Order for sale documents from:
Superintendent of Documents
U.S. Government Printing Office (GPO)
710 North Capitol Street, NW
Washington, DC 20401
Ph: 202-512-1800
Fax: 202-512-2104
E-mail: contactcenter@gpo.gov
Internet: http://www.gpoaccess.gov
Order free documents from:
Federal Aviation Administration
Department of Transportation
800 Independence Avenue, SW
Washington, DC 20591
Ph: 1-866-835-5322
Internet: http://www.faa.gov

U.S. FEDERAL COMMUNICATIONS COMMISSION (FCC)
445 12th Street SW
Washington, DC 20554
Ph: 888-225-5322
TTY: 888-835-5322
Fax: 866-418-0232
Internet: http://www.fcc.gov
Order Publications From:
Superintendent of Documents
U.S. Government Printing Office (GPO)
710 North Capitol Street, NW
Washington, DC 20401-0001
Ph: 202-512-1800
Fax: 866-418-0232
E-mail: gpoweb@gpo.gov
Internet: http://www.gpoaccess.gov/

U.S. FEDERAL HIGHWAY ADMINISTRATION (FHWA)
FHWA, Office of Safety
1200 New Jersey Ave., SE
Washington, DC 20590
Ph: 202-366-4000
Internet: http://www.fhwa.dot.gov
Order from:

Superintendent of Documents
U. S. Government Printing Office (GPO)
710 North Capitol Street, NW
Washington, DC 20401
Ph: 202-512-1800
Fax: 202-512-2104
E-mail: contactcenter@gpo.gov
Internet: http://www.gpoaccess.gov

U.S. GENERAL SERVICES ADMINISTRATION (GSA)
General Services Administration
1275 First St. NE
Washington, DC 20417
Ph: 202-501-1231
Internet: http://www.gsaelibrary.gsa.gov/ElibMain/home.do
Obtain documents from:
Acquisition Streamlining and Standardization Information System (ASSIST)
Internet: https://assist.dla.mil/online/start/; account registration required

U.S. NATIONAL ARCHIVES AND RECORDS ADMINISTRATION (NARA)
8601 Adelphi Road
College Park, MD 20740-6001
Ph: 866-272-6272
Fax: 301-837-0483
Internet: http://www.archives.gov
Order documents from:
Superintendent of Documents
U.S.Government Printing Office (GPO)
710 North Capitol Street, NW
Washington, DC 20401
Ph: 202-512-1800
Fax: 202-512-2104
E-mail: contactcenter@gpo.gov
Internet: http://www.gpoaccess.gov

UNDERWRITERS LABORATORIES (UL)
2600 N.W. Lake Road
Camas, WA 98607-8542
Ph: 877-854-3577
E-mail: CEC.us@us.ul.com
Internet: http://www.ul.com/
UL Directories available through IHS at http://www.ihs.com

WESTERN WOOD PRESERVERS INSTITUTE (WWPI)
12503 SE Mill Plain Blvd, Ste 205
Vancouver, WA 98684
Ph: 360-693-9958
E-mail: info@wwpinstitute.org
Internet: http://www.wwpinstitute.org

PART 2 PRODUCTS

Not used.

PART 3 EXECUTION

Not used.

-- End of Section --

SECTION 01 50 00

TEMPORARY CONSTRUCTION FACILITIES AND CONTROLS

PART 1 GENERAL

1.1 SUMMARY

Requirements of this Section apply to, and are a component of, each section of the specifications.

1.2 REFERENCES

The publications listed below form a part of this specification to the extent referenced. The publications are referred to within the text by the basic designation only.

NATIONAL FIRE PROTECTION ASSOCIATION (NFPA)

NFPA 241	(2019) Standard for Safeguarding Construction, Alteration, and Demolition Operations
NFPA 70	(2020; ERTA 20-1 2020; ERTA 20-2 2020; TIA 20-1; TIA 20-2; TIA 20-3; TIA 20-4) National Electrical Code

U.S. FEDERAL AVIATION ADMINISTRATION (FAA)

FAA AC 70/7460-1	(2016; Rev L; Change 2) Obstruction Marking and Lighting

U.S. FEDERAL HIGHWAY ADMINISTRATION (FHWA)

MUTCD	(2009; Rev 2012) Manual on Uniform Traffic Control Devices

1.3 SUBMITTALS

Government approval is required for submittals with a "G" designation; submittals not having a "G" designation are for Contractor Quality Control approval. Submit the following in accordance with Section 01 33 00 SUBMITTAL PROCEDURES:

SD-01 Preconstruction Submittals

Construction site plan; G

Traffic control plan; G

PART 2 PRODUCTS

2.1 TEMPORARY SIGNAGE

2.1.1 Bulletin Board

Immediately upon beginning of work, provide a weatherproof glass-covered

bulletin board not less than 36 by 48 inches in size for displaying the Equal Employment Opportunity poster, a copy of the wage decision contained in the contract, Wage Rate Information poster, and other information approved by the Owner. Locate the bulletin board at the project site in a conspicuous place easily accessible to all employees, as approved by the Contracting Officer.

2.1.2 Project and Safety Signs

The requirements for the signs, their content, and location are as required. Erect signs within 15 days after receipt of the notice to proceed. Correct the data required by the safety sign daily, with light colored metallic or non-metallic numerals.

2.2 TEMPORARY TRAFFIC CONTROL

2.2.1 Barricades

Erect and maintain temporary barricades to limit public access to hazardous areas. Whenever safe public access to paved areas such as roads, parking areas or sidewalks is prevented by construction activities or as otherwise necessary to ensure the safety of both pedestrian and vehicular traffic barricades will be required. Securely place barricades clearly visible with adequate illumination to provide sufficient visual warning of the hazard during both day and night.

2.2.2 Fencing

a. Provide fencing along the construction site at all open excavations and tunnels to control access by unauthorized people. Fencing must be installed to be able to restrain a force of at least 250 pounds against it.

2.2.3 Temporary Wiring

Provide temporary wiring in accordance with NFPA 241 and NFPA 70. Include frequent inspection of all equipment and apparatus.

PART 3 EXECUTION

3.1 EMPLOYEE PARKING

Contractor employees will be limited to two vehicles parked on-site. This area will be within reasonable walking distance of the construction site. Contractor employee parking must not interfere with existing and established parking requirements of the government installation.

3.2 AVAILABILITY AND USE OF UTILITY SERVICES

3.2.1 Temporary Utilities

Provide temporary utilities required for construction. Materials may be new or used, must be adequate for the required usage, not create unsafe conditions, and not violate applicable codes and standards. No utilities such as electric/sewer/internet/water or building will be made available to the Contractor.

3.2.2 Sanitation

Provide and maintain within the construction area minimum field-type sanitary facilities approved by the Contracting Officer and periodically empty wastes into a municipal sanitary sewage system, or remove waste to a commercial facility. Obtain approval from the system Contracting Officer prior to discharge into any municipal, district, or commercial sanitary sewer system. Any penalties and / or fines associated with improper discharge will be the responsibility of the Contractor. Coordinate with the Contracting Officer and follow station regulations and procedures when discharging into the station sanitary sewer system. Maintain these conveniences at all times without nuisance. Include provisions for pest control and elimination of odors. Government toilet facilities will not be available to Contractor's personnel.

3.2.3 Telephone

Make arrangements and pay all costs for telephone facilities desired.

3.2.4 Obstruction Lighting of Cranes

Provide a minimum of 2 aviation red or high intensity white obstruction lights on temporary structures (including cranes) over 100 feet above ground level. Light construction and installation must comply with FAA AC 70/7460-1. Lights must be operational during periods of reduced visibility, darkness, and as directed by the Contracting Officer.

3.2.5 Fire Protection

Provide temporary fire protection equipment for the protection of personnel and property during construction. Remove debris and flammable materials weekly to minimize potential hazards.

3.3 TRAFFIC PROVISIONS

3.3.1 Maintenance of Traffic

a. Conduct operations in a manner that will not close any thoroughfare or interfere in any way with traffic on railways or highways except with written permission of the Contracting Officer at least 15 calendar days prior to the proposed modification date, and provide a Traffic Control Plan detailing the proposed controls to traffic movement for approval. The plan must be in accordance with State and local regulations and the MUTCD, Part VI. Contractor may move oversized and slow-moving vehicles to the worksite provided requirements of the highway authority have been met.

b. Conduct work so as to minimize obstruction of traffic, and maintain traffic on at least half of the roadway width at all times. Obtain approval from the Contracting Officer prior to starting any activity that will obstruct traffic.

c. Provide, erect, and maintain, at contractors expense, lights, barriers, signals, passageways, detours, and other items, that may be required by the Life Safety Signage, overhead protection authority having jurisdiction.

d. Provide traffic protection for areas of the site that remain open for operations or parking in accordance with MUTCD requirements.

3.3.2 Protection of Traffic

Maintain and protect traffic on all affected roads during the construction period except as otherwise specifically directed by the Contracting Officer. Measures for the protection and diversion of traffic, including the provision of watchmen and flagmen, erection of barricades, placing of lights around and in front of equipment the work, and the erection and maintenance of adequate warning, danger, and direction signs, will be as required by the State and local authorities having jurisdiction. Protect the traveling public from damage to person and property. Minimize the interference with public traffic on roads selected for hauling material to and from the site. Investigate the adequacy of existing roads and their allowable load limit. Contractor is responsible for the repair of any damage to roads caused by construction operations.

3.3.3 Dust Control

Dust control methods and procedures must be approved by the Contracting Officer. Treat dust abatement on access roads with applications of calcium chloride, water sprinklers, or similar methods or treatment.

3.4 CONTRACTOR'S TEMPORARY FACILITIES

3.4.1 Safety

Protect the integrity of any installed safety systems or personnel safety devices. If entrance into systems serving safety devices is required, the Contractor must obtain prior approval from the Contracting Officer. If it is temporarily necessary to remove or disable personnel safety devices in order to accomplish contract requirements, provide alternative means of protection prior to removing or disabling any permanently installed safety devices or equipment and obtain approval from the Contracting Officer.

3.4.2 Administrative Field Offices

Provide and maintain administrative field office facilities within the construction area at the designated site. Government office and warehouse facilities will not be available to the Contractor's personnel.

3.4.3 Storage Area

Construct a temporary 6 foot high chain link fence around trailers and materials. Include plastic strip inserts, colored, so that visibility through the fence is obstructed. Fence posts may be driven, in lieu of concrete bases, where soil conditions permit (except in paved areas). Do not place or store Trailers, materials, or equipment outside the fenced area unless such trailers, materials, or equipment are assigned a separate and distinct storage area by the Contracting Officer away from the vicinity of the construction site but within the installation boundaries. Trailers, equipment, or materials must not be open to public view with the exception of those items which are in support of ongoing work on any given day. Do not stockpile materials outside the fence in preparation for the next day's work. Park mobile equipment, such as tractors, wheeled lifting equipment, cranes, trucks, and like equipment within the fenced area at the end of each work day.

3.4.4 Supplemental Storage Area

Upon Contractor's request, the Contracting Officer will designate another or supplemental area for the Contractor's use and storage of trailers, equipment, and materials. This area may not be in close proximity of the construction site but will be within the installation boundaries. Fencing of materials or equipment will not be required at this site; however, the Contractor is responsible for cleanliness and orderliness of the area used and for the security of any material or equipment stored in this area. Utilities will not be provided to this area by the Government.

3.4.5 Appearance of Trailers

a. Trailers utilized by the Contractor for administrative or material storage purposes must present a clean and neat exterior appearance and be in a state of good repair. Trailers which, in the opinion of the Contracting Officer, require exterior painting or maintenance will not be allowed on installation property.

3.4.6 Maintenance of Storage Area

a. Keep fencing in a state of good repair and proper alignment. Grassed or unpaved areas, which are not established roadways, will be covered with a layer of gravel as necessary to prevent rutting and the tracking of mud onto paved or established roadways, should the Contractor elect to traverse them with construction equipment or other vehicles; gravel gradation will be at the Contractor's discretion. Mow and maintain grass located within the boundaries of the construction site for the duration of the project. Grass and vegetation along fences, buildings, under trailers, and in areas not accessible to mowers will be edged or trimmed neatly.

3.4.7 Security Provisions

Provide adequate outside security lighting at the Contractor's temporary facilities. The Contractor will be responsible for the security of its own equipment; in addition, the Contractor will notify the appropriate law enforcement agency requesting periodic security checks of the temporary project field office.

3.4.8 Weather Protection of Temporary Facilities and Stored Materials

Take necessary precautions to ensure that roof openings and other critical openings in the building are monitored carefully. Take immediate actions required to seal off such openings when rain or other detrimental weather is imminent, and at the end of each workday. Ensure that the openings are completely sealed off to protect materials and equipment in the building from damage.

3.4.8.1 Building and Site Storm Protection

When a warning of gale force winds (or higher) is issued, take precautions to minimize danger to persons, and protect the work and nearby Government property. Precautions must include, but are not limited to, closing openings; removing loose materials, tools and equipment from exposed locations; and removing or securing scaffolding and other temporary work. Close openings in the work when storms of lesser intensity pose a threat to the work or any nearby Government property.

3.5 PLANT COMMUNICATION

Whenever the Contractor has the individual elements of its plant so located that operation by normal voice between these elements is not satisfactory, the Contractor must install a satisfactory means of communication, such as telephone or other suitable devices and made available for use by Government personnel.

3.6 TEMPORARY PROJECT SAFETY FENCING

As soon as practicable, but not later than 15 days after the date established for commencement of work, furnish and erect temporary project safety fencing at the work site. The safety fencing must be a high visibility orange colored, high density polyethylene grid or approved equal, a minimum of 42 inches high, supported and tightly secured to steel posts located on maximum 10 foot centers, constructed at the approved location. Maintain the safety fencing during the life of the contract and, upon completion and acceptance of the work, will become the property of the Contractor and be removed from the work site.

3.7 CLEANUP

Remove construction debris, waste materials, packaging material and the like from the work site daily. Any dirt or mud which is tracked onto paved or surfaced roadways must be cleaned away. Store within the fenced area described above or at the supplemental storage area any materials resulting from demolition activities which are salvageable. Neatly stacked stored materials not in trailers, whether new or salvaged.

3.8 RESTORATION OF STORAGE AREA

Upon completion of the project remove the bulletinboard, signs, barricades, haulroads, and any other temporary products from the site. After removal of trailers, materials, and equipment from within the fenced area, remove the fence that will become the property of the Contractor. Restore to the original or better condition, areas used by the Contractor for the storage of equipment or material, or other use. Gravel used to traverse grassed areas must be removed and the area restored to its original condition, including top soil and seeding as necessary.

-- End of Section --

SECTION 01 57 19

TEMPORARY ENVIRONMENTAL CONTROLS

PART 1 GENERAL

1.1 REFERENCES

The publications listed below form a part of this specification to the extent referenced. The publications are referred to within the text by the basic designation only.

U.S. ENVIRONMENTAL PROTECTION AGENCY (EPA)

EPA SW-846	(Third Edition; Update IV) Test Methods for Evaluating Solid Waste: Physical/Chemical Methods

U.S. NATIONAL ARCHIVES AND RECORDS ADMINISTRATION (NARA)

29 CFR 1910.120	Hazardous Waste Operations and Emergency Response
40 CFR 112	Oil Pollution Prevention
40 CFR 122.26	Storm Water Discharges (Applicable to State NPDES Programs, see section 123.25)
40 CFR 241	Guidelines for Disposal of Solid Waste
40 CFR 243	Guidelines for the Storage and Collection of Residential, Commercial, and Institutional Solid Waste
40 CFR 258	Subtitle D Landfill Requirements
40 CFR 260	Hazardous Waste Management System: General
40 CFR 261	Identification and Listing of Hazardous Waste
40 CFR 261.7	Residues of Hazardous Waste in Empty Containers
40 CFR 262	Standards Applicable to Generators of Hazardous Waste
40 CFR 262.31	Standards Applicable to Generators of Hazardous Waste-Labeling
40 CFR 262.34	Standards Applicable to Generators of Hazardous Waste-Accumulation Time
40 CFR 263	Standards Applicable to Transporters of Hazardous Waste
40 CFR 264	Standards for Owners and Operators of Hazardous Waste Treatment, Storage, and

	Disposal Facilities
40 CFR 265	Interim Status Standards for Owners and Operators of Hazardous Waste Treatment, Storage, and Disposal Facilities
40 CFR 266	Standards for the Management of Specific Hazardous Wastes and Specific Types of Hazardous Waste Management Facilities
40 CFR 268	Land Disposal Restrictions
40 CFR 273	Standards for Universal Waste Management
40 CFR 273.2	Standards for Universal Waste Management - Batteries
40 CFR 273.4	Standards for Universal Waste Management - Mercury Containing Equipment
40 CFR 273.5	Standards for Universal Waste Management - Lamps
40 CFR 279	Standards for the Management of Used Oil
40 CFR 300	National Oil and Hazardous Substances Pollution Contingency Plan
40 CFR 300.125	National Oil and Hazardous Substances Pollution Contingency Plan - Notification and Communications
40 CFR 355	Emergency Planning and Notification
40 CFR 403	General Pretreatment Regulations for Existing and New Sources of Pollution
40 CFR 50	National Primary and Secondary Ambient Air Quality Standards
40 CFR 60	Standards of Performance for New Stationary Sources
40 CFR 61	National Emission Standards for Hazardous Air Pollutants
40 CFR 63	National Emission Standards for Hazardous Air Pollutants for Source Categories
40 CFR 64	Compliance Assurance Monitoring
40 CFR 745	Lead-Based Paint Poisoning Prevention in Certain Residential Structures
40 CFR 761	Polychlorinated Biphenyls (PCBs) Manufacturing, Processing, Distribution in Commerce, and Use Prohibitions
49 CFR 171	General Information, Regulations, and

	Definitions
49 CFR 172	Hazardous Materials Table, Special Provisions, Hazardous Materials Communications, Emergency Response Information, and Training Requirements
49 CFR 172.101	Hazardous Material Regulation-Purpose and Use of Hazardous Material Table
49 CFR 173	Shippers - General Requirements for Shipments and Packagings
49 CFR 178	Specifications for Packagings

1.2 DEFINITIONS

1.2.1 Contractor Generated Hazardous Waste

Contractor generated hazardous waste is materials that, if abandoned or disposed of, may meet the definition of a hazardous waste. These waste streams would typically consist of material brought on site by the Contractor to execute work, but are not fully consumed during the course of construction. Examples include, but are not limited to, excess paint thinners (i.e. methyl ethyl ketone, toluene), waste thinners, excess paints, excess solvents, waste solvents, excess pesticides, and contaminated pesticide equipment rinse water.

1.2.2 Electronics Waste

Electronics waste is discarded electronic devices intended for salvage, recycling, or disposal.

1.2.3 Environmental Pollution and Damage

Environmental pollution and damage is the presence of chemical, physical, or biological elements or agents which adversely affect human health or welfare; unfavorably alter ecological balances of importance to human life; affect other species of importance to humankind; or degrade the environment aesthetically, culturally or historically.

1.2.4 Environmental Protection

Environmental protection is the prevention/control of pollution and habitat disruption that may occur to the environment during construction. The control of environmental pollution and damage requires consideration of land, water, and air; biological and cultural resources; and includes management of visual aesthetics; noise; solid, chemical, gaseous, and liquid waste; radiant energy and radioactive material as well as other pollutants.

1.2.5 Hazardous Debris

As defined in paragraph SOLID WASTE, debris that contains listed hazardous waste (either on the debris surface, or in its interstices, such as pore structure) in accordance with 40 CFR 261. Hazardous debris also includes debris that exhibits a characteristic of hazardous waste in accordance with 40 CFR 261.

1.2.6 Hazardous Materials

Hazardous materials as defined in 49 CFR 171 and listed in 49 CFR 172.

Hazardous material is any material that: Is regulated as a hazardous material in accordance with 49 CFR 173; or requires a Safety Data Sheet (SDS) in accordance with 29 CFR 1910.120; or during end use, treatment, handling, packaging, storage, transportation, or disposal meets or has components that meet or have potential to meet the definition of a hazardous waste as defined by 40 CFR 261 Subparts A, B, C, or D. Designation of a material by this definition, when separately regulated or controlled by other sections or directives, does not eliminate the need for adherence to that hazard-specific guidance which takes precedence over this section for "control" purposes. Such material includes ammunition, weapons, explosive actuated devices, propellants, pyrotechnics, chemical and biological warfare materials, medical and pharmaceutical supplies, medical waste and infectious materials, bulk fuels, radioactive materials, and other materials such as asbestos, mercury, and polychlorinated biphenyls (PCBs).

1.2.7 Hazardous Waste

Hazardous Waste is any material that meets the definition of a solid waste and exhibit a hazardous characteristic (ignitability, corrosivity, reactivity, or toxicity) as specified in 40 CFR 261, Subpart C, or contains a listed hazardous waste as identified in 40 CFR 261, Subpart D.

1.2.8 Land Application

Land Application means spreading or spraying discharge water at a rate that allows the water to percolate into the soil. No sheeting action, soil erosion, discharge into storm sewers, discharge into defined drainage areas, or discharge into the "waters of the United States" must occur. Comply with federal, state, and local laws and regulations.

1.2.9 Municipal Separate Storm Sewer System (MS4) Permit

MS4 permits are those held by installations to obtain NPDES permit coverage for their stormwater discharges.

1.2.10 National Pollutant Discharge Elimination System (NPDES)

The NPDES permit program controls water pollution by regulating point sources that discharge pollutants into waters of the United States.

1.2.11 Oily Waste

Oily waste are those materials that are, or were, mixed with Petroleum, Oils, and Lubricants (POLs) and have become separated from that POLs. Oily wastes also means materials, including wastewaters, centrifuge solids, filter residues or sludges, bottom sediments, tank bottoms, and sorbents which have come into contact with and have been contaminated by, POLs and may be appropriately tested and discarded in a manner which is in compliance with other state and local requirements.

This definition includes materials such as oily rags, "kitty litter" sorbent clay and organic sorbent material. These materials may be land filled provided that: It is not prohibited in other state regulations or local ordinances; the amount generated is "de minimus" (a small amount);

it is the result of minor leaks or spills resulting from normal process operations; and free-flowing oil has been removed to the practicable extent possible. Large quantities of this material, generated as a result of a major spill or in lieu of proper maintenance of the processing equipment, are a solid waste. As a solid waste, perform a hazardous waste determination prior to disposal. As this can be an expensive process, it is recommended that this type of waste be minimized through good housekeeping practices and employee education.

1.2.12 Regulated Waste

Regulated waste are solid wastes that have specific additional federal, state, or local controls for handling, storage, or disposal.

1.2.13 Sediment

Sediment is soil and other debris that have eroded and have been transported by runoff water or wind.

1.2.14 Solid Waste

Solid waste is a solid, liquid, semi-solid or contained gaseous waste. A solid waste can be a hazardous waste, non-hazardous waste, or non-Resource Conservation and Recovery Act (RCRA) regulated waste. Types of solid waste typically generated at construction sites may include:

1.2.14.1 Debris

Debris is non-hazardous solid material generated during the construction, demolition, or renovation of a structure that exceeds 2.5-inch particle size that is: a manufactured object; plant or animal matter; or natural geologic material (for example, cobbles and boulders), broken or removed concrete, masonry, and rock asphalt paving; ceramics; roofing paper and shingles. Inert materials may be reinforced with or contain ferrous wire, rods, accessories and weldments. A mixture of debris and other material such as soil or sludge is also subject to regulation as debris if the mixture is comprised primarily of debris by volume, based on visual inspection.

1.2.14.2 Material not regulated as solid waste

Material not regulated as solid waste is nuclear source or byproduct materials regulated under the Federal Atomic Energy Act of 1954 as amended; suspended or dissolved materials in domestic sewage effluent or irrigation return flows, or other regulated point source discharges; regulated air emissions; and fluids or wastes associated with natural gas or crude oil exploration or production.

1.2.14.3 Non-Hazardous Waste

Non-hazardous waste is waste that is excluded from, or does not meet, hazardous waste criteria in accordance with 40 CFR 263.

1.2.14.4 Recyclables

Recyclables are materials, equipment and assemblies such as doors, windows, door and window frames, plumbing fixtures, glazing and mirrors that are recovered and sold as recyclable, wiring, insulated/non-insulated copper wire cable, wire rope, and structural components. It also includes

commercial-grade refrigeration equipment with Freon removed, household appliances where the basic material content is metal, clean polyethylene terephthalate bottles, cooking oil, used fuel oil, textiles, high-grade paper products and corrugated cardboard, stackable pallets in good condition, clean crating material, and clean rubber/vehicle tires. Metal meeting the definition of lead contaminated or lead based paint contaminated may not be included as recyclable if sold to a scrap metal company. Paint cans that meet the definition of empty containers in accordance with 40 CFR 261.7 may be included as recyclable if sold to a scrap metal company.

1.2.14.5 Surplus Soil

Surplus soil is existing soil that is in excess of what is required for this work, including aggregates intended, but not used, for on-site mixing of concrete, mortars, and paving. Contaminated soil meeting the definition of hazardous material or hazardous waste is not included and must be managed in accordance with paragraph HAZARDOUS MATERIAL MANAGEMENT.

1.2.14.6 Scrap Metal

This includes scrap and excess ferrous and non-ferrous metals such as reinforcing steel, structural shapes, pipe, and wire that are recovered or collected and disposed of as scrap. Scrap metal meeting the definition of hazardous material or hazardous waste is not included.

1.2.14.7 Wood

Wood is dimension and non-dimension lumber, plywood, chipboard, hardboard. Treated or painted wood that meets the definition of lead contaminated or lead based contaminated paint is not included. Treated wood includes, but is not limited to, lumber, utility poles, crossties, and other wood products with chemical treatment.

1.2.15 Surface Discharge

Surface discharge means discharge of water into drainage ditches, storm sewers, creeks or "waters of the United States". Surface discharges are discrete, identifiable sources and require a permit from the governing agency. Comply with federal, state, and local laws and regulations.

1.2.16 Wastewater

Wastewater is the used water and solids from a community that flow to a treatment plant.

1.2.16.1 Stormwater

Stormwater is any precipitation in an urban or suburban area that does not evaporate or soak into the ground, but instead collects and flows into storm drains, rivers, and streams.

1.2.17 Waters of the United States

Waters of the United States means Federally jurisdictional waters, including wetlands, that are subject to regulation under Section 404 of the Clean Water Act or navigable waters, as defined under the Rivers and Harbors Act.

1.2.18 Wetlands

Wetlands are those areas that are inundated or saturated by surface or groundwater at a frequency and duration sufficient to support, and that under normal circumstances do support, a prevalence of vegetation typically adapted for life in saturated soil conditions.

1.2.19 Universal Waste

The universal waste regulations streamline collection requirements for certain hazardous wastes in the following categories: batteries, pesticides, mercury-containing equipment (for example, thermostats), and lamps (for example, fluorescent bulbs). The rule is designed to reduce hazardous waste in the municipal solid waste (MSW) stream by making it easier for universal waste handlers to collect these items and send them for recycling or proper disposal. These regulations can be found at 40 CFR 273.

1.3 SUBMITTALS

Government approval is required for submittals with a "G" designation; submittals not having a "G" designation are for Contractor Quality Control approval. Submit the following in accordance with Section 01 33 00 SUBMITTAL PROCEDURES:

SD-01 Preconstruction Submittals

Preconstruction Survey; G

Solid Waste Management Permit; G

Regulatory Notifications; G

Environmental Protection Plan; G

Dirt and Dust Control Plan; G

Employee Training Records; G

Environmental Manager Qualifications; G

SD-06 Test Reports

Laboratory Analysis; G

Inspection Reports; G

Solid Waste Management Report; G

SD-07 Certificates

Employee Training Records; G

Erosion and Sediment Control Inspector Qualifications; G

SD-11 Closeout Submittals

Stormwater Pollution Prevention Plan Compliance Notebook; G

Stormwater Notice of Termination (for NPDES coverage under the general permit for construction activities); G

Waste Determination Documentation; G

Disposal Documentation for Hazardous and Regulated Waste; G

Assembled Employee Training Records; G

Solid Waste Management Permit; G

Solid Waste Management Report; G

Hazardous Waste/Debris Management; G

Regulatory Notifications; G

Sales Documentation; G

Contractor Certification; G

1.4 ENVIRONMENTAL PROTECTION REQUIREMENTS

Provide and maintain, during the life of the contract, environmental protection as defined. Plan for and provide environmental protective measures to control pollution that develops during construction practice. Plan for and provide environmental protective measures required to correct conditions that develop during the construction of permanent or temporary environmental features associated with the project. Protect the environmental resources within the project boundaries and those affected outside the limits of permanent work during the entire duration of this Contract. Comply with federal, state, and local regulations pertaining to the environment, including water, air, solid waste, hazardous waste and substances, oily substances, and noise pollution.

Tests and procedures assessing whether construction operations comply with Applicable Environmental Laws may be required. Analytical work must be performed by qualified laboratories; and where required by law, the laboratories must be certified.

1.5 SPECIAL ENVIRONMENTAL REQUIREMENTS

Comply with the special environmental requirements listed in Appendix C.

1.6 QUALITY ASSURANCE

1.6.1 Preconstruction Survey and Protection of Features

This paragraph supplements the Contract Clause PROTECTION OF EXISTING VEGETATION, STRUCTURES, EQUIPMENT, UTILITIES, AND IMPROVEMENTS. Prior to start of any onsite construction activities, perform a Preconstruction Survey of the project site with the Contracting Officer, and take photographs showing existing environmental conditions in and adjacent to the site. Submit a report for the record. Include in the report a plan describing the features requiring protection under the provisions of the Contract Clauses, which are not specifically identified on the drawings as environmental features requiring protection along with the condition of trees, shrubs and grassed areas immediately adjacent to the site of work and adjacent to the Contractor's assigned storage area and access

route(s), as applicable. The Contractor and the Contracting Officer will sign this survey report upon mutual agreement regarding its accuracy and completeness. Protect those environmental features included in the survey report and any indicated on the drawings, regardless of interference that their preservation may cause to the work under the Contract.

1.6.2 Regulatory Notifications

Provide regulatory notification requirements in accordance with federal, state and local regulations. In cases where the Government will also provide public notification (such as stormwater permitting), coordinate with the Contracting Officer. Submit copies of regulatory notifications to the Contracting Officer at least 10 days prior to commencement of work activities. Typically, regulatory notifications must be provided for the following (this listing is not all-inclusive): demolition, renovation, NPDES defined site work, construction, removal or use of a permitted air emissions source, and remediation of controlled substances (asbestos, hazardous waste, lead paint).

1.6.3 Environmental Brief

Attend an environmental brief to be included in the preconstruction meeting. Provide the following information: types, quantities, and use of hazardous materials that will be brought onto the installation; and types and quantities of wastes/wastewater that may be generated during the Contract. Discuss the results of the Preconstruction Survey at this time.

Prior to initiating any work on site, meet with the Contracting Officer and installation Environmental Office to discuss the proposed Environmental Protection Plan (EPP). Develop a mutual understanding relative to the details of environmental protection, including measures for protecting natural and cultural resources, required reports, required permits, permit requirements (such as mitigation measures), and other measures to be taken.

1.6.4 Environmental Manager

Appoint in writing an Environmental Manager for the project site. The Environmental Manager is directly responsible for coordinating contractor compliance with federal, state, local, and installation requirements. The Environmental Manager must ensure compliance with Hazardous Waste Program requirements (including hazardous waste handling, storage, manifesting, and disposal); implement the EPP; ensure environmental permits are obtained, maintained, and closed out; ensure compliance with Stormwater Program requirements; ensure compliance with Hazardous Materials (storage, handling, and reporting) requirements; and coordinate any remediation of regulated substances (lead, asbestos, PCB transformers). This can be a collateral position; however, the person in this position must be trained to adequately accomplish the following duties: ensure waste segregation and storage compatibility requirements are met; inspect and manage Satellite Accumulation areas; ensure only authorized personnel add wastes to containers; ensure Contractor personnel are trained in 40 CFR requirements in accordance with their position requirements; coordinate removal of waste containers; and maintain the Environmental Records binder and required documentation, including environmental permits compliance and close-out. Submit Environmental Manager Qualifications to the Contracting Officer.

1.6.5 Employee Training Records

Prepare and maintain Employee Training Records throughout the term of the contract meeting applicable 40 CFR requirements. Provide Employee Training Records in the Environmental Records Binder. Submit these Assembled Employee Training Records to the Contracting Officer at the conclusion of the project, unless otherwise directed.

Train personnel to meet EPA and state requirements. Conduct environmental protection/pollution control meetings for personnel prior to commencing construction activities. Contact additional meetings for new personnel and when site conditions change. Include in the training and meeting agenda: methods of detecting and avoiding pollution; familiarization with statutory and contractual pollution standards; installation and care of devices, vegetative covers, and instruments required for monitoring purposes to ensure adequate and continuous environmental protection/pollution control; anticipated hazardous or toxic chemicals or wastes, and other regulated contaminants; recognition and protection of archaeological sites, artifacts, waters of the United States, and endangered species and their habitat that are known to be in the area. Provide copy of the Erosion and Sediment Control Inspector. Certification as required by state.

1.6.6 Non-Compliance Notifications

The Contracting Officer will notify the Contractor in writing of any observed noncompliance with federal, state or local environmental laws or regulations, permits, and other elements of the Contractor's EPP. After receipt of such notice, inform the Contracting Officer of the proposed corrective action and take such action when approved by the Contracting Officer. The Contracting Officer may issue an order stopping all or part of the work until satisfactory corrective action has been taken. No time extensions will be granted or equitable adjustments allowed for any such suspensions. This is in addition to any other actions the Contracting Officer may take under the contract, or in accordance with the Federal Acquisition Regulation or Federal Law.

1.7 ENVIRONMENTAL PROTECTION PLAN

The purpose of the EPP is to present an overview of known or potential environmental issues that must be considered and addressed during construction. Incorporate construction related objectives and targets from the installation's EMS into the EPP. Include in the EPP measures for protecting natural and cultural resources, required reports, and other measures to be taken. Meet with the Contracting Officer or Contracting Officer Representative to discuss the EPP and develop a mutual understanding relative to the details for environmental protection including measures for protecting natural resources, required reports, and other measures to be taken. Submit the EPP within 15 days after Contract award and not less than 10 days before the preconstruction meeting. Revise the EPP throughout the project to include any reporting requirements, changes in site conditions, or contract modifications that change the project scope of work in a way that could have an environmental impact. No requirement in this section will relieve the Contractor of any applicable federal, state, and local environmental protection laws and regulations. During Construction, identify, implement, and submit for approval any additional requirements to be included in the EPP. Maintain the current version onsite.

The EPP includes, but is not limited to, the following elements:

1.7.1 General Overview and Purpose

1.7.1.1 Descriptions

A brief description of each specific plan required by environmental permit or elsewhere in this Contract such as stormwater pollution prevention plan, spill control plan, solid waste management plan, wastewater management plan, air pollution control plan, contaminant prevention plan, biological resources and wetlands plan, traffic control plan, Hazardous and Toxic and Waste (HTW) Plan, and Non-Hazardous Solid Waste Disposal Plan.

1.7.1.2 Duties

The duties and level of authority assigned to the person(s) on the job site who oversee environmental compliance, such as who is responsible for adherence to the EPP, who is responsible for spill cleanup and training personnel on spill response procedures, who is responsible for manifesting hazardous waste to be removed from the site (if applicable), and who is responsible for training the Contractor's environmental protection personnel.

1.7.1.3 Procedures

A copy of any standard or project-specific operating procedures that will be used to effectively manage and protect the environment on the project site.

1.7.1.4 Communications

Communication and training procedures that will be used to convey environmental management requirements to Contractor employees and subcontractors.

1.7.1.5 Contact Information

Emergency contact information contact information (office phone number, cell phone number, and e-mail address).

1.7.2 General Site Information

1.7.2.1 Drawings

Drawings showing locations of proposed temporary excavations, jurisdictional wetlands, material storage areas, structures, sanitary facilities, storm drains and conveyances, and stockpiles of excess soil.

1.7.2.2 Work Area

Work area plan showing the proposed activity in each portion of the area and identify the areas of limited use or nonuse. Include measures for marking the limits of use areas, including methods for protection of features to be preserved within authorized work areas and methods to control runoff and to contain materials on site, and a traffic control plan.

1.7.2.3 Documentation

A letter signed by an officer of the firm appointing the Environmental Manager and stating that person is responsible for managing and implementing the Environmental Program as described in this contract. Include in this letter the Environmental Manager's authority to direct the removal and replacement of non-conforming work.

1.7.3 Management of Natural Resources

a. Land resources

b. Fish and wildlife resources

c. Wetland areas

1.7.4 Protection of Historical and Archaeological Resources

a. Objectives

b. Methods

1.7.5 Stormwater Management and Control

a. Ground cover

b. Erodible soils

c. Temporary measures

(1) Structural Practices

(2) Temporary and permanent stabilization

d. Effective selection, implementation and maintenance of Best Management Practices (BMPs).

1.7.6 Protection of the Environment from Waste Derived from Contractor Operations

Control and disposal of solid and sanitary waste. Control and disposal of hazardous waste.

This item consists of the management procedures for hazardous waste to be generated. The elements of those procedures will coincide with the Installation Hazardous Waste Management Plan. The Contracting Officer will provide a copy of the Installation Hazardous Waste Management Plan. As a minimum, include the following:

a. List of the types of hazardous wastes expected to be generated

b. Procedures to ensure a written waste determination is made for appropriate wastes that are to be generated

c. Sampling/analysis plan, including laboratory method(s) that will be used for waste determinations and copies of relevant laboratory certifications

d. Methods and proposed locations for hazardous waste

accumulation/storage (that is, in tanks or containers)

e. Management procedures for storage, labeling, transportation, and disposal of waste (treatment of waste is not allowed unless specifically noted)

f. Management procedures and regulatory documentation ensuring disposal of hazardous waste complies with Land Disposal Restrictions (40 CFR 268)

g. Management procedures for recyclable hazardous materials such as lead-acid batteries, used oil, and similar

h. Used oil management procedures in accordance with 40 CFR 279; Hazardous waste minimization procedures

i. Plans for the disposal of hazardous waste by permitted facilities; and Procedures to be employed to ensure required employee training records are maintained.

j. Plan for containment, collection, and disposal of paint chips and corrosion by-product generated in the recoating process.

1.7.7 Prevention of Releases to the Environment

Procedures to prevent releases to the environment

Notifications in the event of a release to the environment

1.7.8 Regulatory Notification and Permits

List what notifications and permit applications must be made. Some permits require up to 180 days to obtain. Demonstrate that those permits have been obtained or applied for by including copies of applicable environmental permits. The EPP will not be approved until the permits have been obtained.

1.7.9 Clean Air Act Compliance

1.7.9.1 Pollution Generating Equipment

Identify air pollution generating equipment or processes that may require federal, state, or local permits under the Clean Air Act. Determine requirements based on any current installation permits and the impacts of the project. Provide a list of all fixed or mobile equipment, machinery or operations that could generate air emissions during the project to the Installation Environmental Office (Air Program Manager).

1.7.9.2 Stationary Internal Combustion Engines

Identify portable and stationary internal combustion engines that will be supplied, used or serviced. Comply with 40 CFR 60 Subpart IIII, 40 CFR 60 Subpart JJJJ, 40 CFR 63 Subpart ZZZZ, and local regulations as applicable. At minimum, include the make, model, serial number, manufacture date, size (engine brake horsepower), and EPA emission certification status of each engine. Maintain applicable records and log hours of operation and fuel use. Logs must include reasons for operation and delineate between emergency and non-emergency operation.

1.7.9.3 Air Pollution-engineering Processes

Identify planned air pollution-generating processes and management control measures (including, but not limited to, spray painting, abrasive blasting, demolition, material handling, fugitive dust, and fugitive emissions). Log hours of operations and track quantities of materials used.

1.7.9.4 Compliant Materials

Provide the Government a list of and SDSs for all hazardous materials proposed for use on site. Materials must be compliant with all Clean Air Act regulations for emissions including solvent and volatile organic compound contents, and applicable National Emission Standards for Hazardous Air Pollutants requirements. The Government may alter or limit use of specific materials as needed to meet installation permit requirements for emissions.

1.8 LICENSES AND PERMITS

Obtain licenses and permits required for the construction of the project and in accordance with FAR 52.236-7. Notify the Government of all general use permitted equipment the Contractor plans to use on site. This paragraph supplements the Contractor's responsibility under FAR 52.236-7.

a. The following permits have been obtained by the Government:

CT DEEP Federal Consistency Review

1.9 ENVIRONMENTAL RECORDS BINDER

Maintain on-site a separate three-ring Environmental Records Binder and submit at the completion of the project. Make separate parts within the binder that correspond to each submittal listed under paragraph CLOSEOUT SUBMITTALS in this section.

1.10 SOLID WASTE MANAGEMENT PERMIT

Provide the Contracting Officer with written notification of the quantity of anticipated solid waste or debris that is anticipated or estimated to be generated by construction. Include in the report the locations where various types of waste will be disposed or recycled. Include letters of acceptance from the receiving location or as applicable; submit one copy of the receiving location state and local Solid Waste Management Permit or license showing such agency's approval of the disposal plan before transporting wastes off Government property.

1.10.1 Solid Waste Management Report

Monthly, submit a solid waste disposal report to the Contracting Officer. For each waste, the report will state the classification (using the definitions provided in this section), amount, location, and name of the business receiving the solid waste.

1.11 FACILITY HAZARDOUS WASTE GENERATOR STATUS

Station New London is designated as a Small Quantity Generator. Meet the regulatory requirements of this generator designation for any work conducted within the boundaries of this Installation. Comply with

provisions of federal, state, and local regulatory requirements applicable to this generator status regarding training and storage, handling, and disposal of construction derived wastes.

PART 2 PRODUCTS

Not used.

PART 3 EXECUTION

3.1 PROTECTION OF NATURAL RESOURCES

Minimize interference with, disturbance to, and damage to fish, wildlife, and plants, including their habitats. Prior to the commencement of activities, consult with the Installation Environmental Office, regarding rare species or sensitive habitats that need to be protected. The protection of rare, threatened, and endangered animal and plant species identified, including their habitats, is the Contractor's responsibility.

Preserve the natural resources within the project boundaries and outside the limits of permanent work. Restore to an equivalent or improved condition upon completion of work that is consistent with the requirements of the Installation Environmental Office or as otherwise specified. Confine construction activities to within the limits of the work indicated or specified.

3.1.1 Flow Ways

Do not alter water flows or otherwise significantly disturb the native habitat adjacent to the project and critical to the survival of fish and wildlife, except as specified and permitted.

3.1.2 Vegetation

Except in areas to be cleared, do not remove, cut, deface, injure, or destroy trees or shrubs without the Contracting Officer's permission. Do not fasten or attach ropes, cables, or guys to existing nearby trees for anchorages unless authorized by the Contracting Officer. Where such use of attached ropes, cables, or guys is authorized, the Contractor is responsible for any resultant damage.

Protect existing trees that are to remain to ensure they are not injured, bruised, defaced, or otherwise damaged by construction operations. Remove displaced rocks from uncleared areas. Coordinate with the Contracting Officer and Installation Environmental Office to determine appropriate action for trees and other landscape features scarred or damaged by equipment operations.

3.2 STORMWATER

Do not discharge stormwater from construction sites to the sanitary sewer. If the water is noted or suspected of being contaminated, it may only be released to the storm drain system if the discharge is specifically permitted. Obtain authorization in advance from the Installation Environmental Office for any release of contaminated water.

3.2.1 Stormwater Pollution Prevention Plan

Submit a project-specific Stormwater Pollution Prevention Plan (SWPPP) to

the Contracting Officer for approval, prior to the commencement of work. The SWPPP must meet the requirements of 40 CFR 122.26 and Maine State General Permit for stormwater discharges from construction sites.

Include the following:

a. Comply with terms of the state general permit for stormwater discharges from construction activities. Prepare SWPPP in accordance with state requirements. Use state guide Developing your Stormwater Pollution Prevention Plan.

b. Select applicable BMPs from EPA Fact Sheets located at http://water.epa.gov/polwaste/npdes/swbmp/Construction-Site-StormWater-Run-Off-Control.cfm or in accordance with applicable state or local requirements.

3.2.2 Erosion and Sediment Control Measures

Provide erosion and sediment control measures in accordance with state and local laws and regulations. Preserve vegetation to the maximum extent practicable.

Erosion control inspection reports may be compiled as part of a stormwater pollution prevention plan inspection reports.

3.2.2.1 Sediment Control Practices

Implement sediment control practices to divert flows from exposed soils, temporarily store flows, or otherwise limit runoff and the discharge of pollutants from exposed areas of the site. Implement sediment control practices prior to soil disturbance and prior to creating areas with concentrated flow, during the construction process to minimize erosion and sediment laden runoff. Include the following devices: silt fence, storm drain inlet protection.

3.2.3 Work Area Limits

Mark the areas that need not be disturbed under this Contract prior to commencing construction activities. Mark or fence isolated areas within the general work area that are not to be disturbed. Protect monuments and markers before construction operations commence. Where construction operations are to be conducted during darkness, any markers must be visible in the dark. Personnel must be knowledgeable of the purpose for marking and protecting particular objects.

3.2.4 Contractor Facilities and Work Areas

Place field offices, staging areas, stockpile storage, and temporary buildings in areas designated on the drawings or as directed by the Contracting Officer. Move or relocate the Contractor facilities only when approved by the Government. Provide erosion and sediment controls for onsite borrow and spoil areas to prevent sediment from entering nearby waters. Control temporary excavation and embankments for plant or work areas to protect adjacent areas.

3.3 SURFACE AND GROUNDWATER

3.3.1 Waters of the United States

Do not enter, disturb, destroy, or allow discharge of contaminants into waters of the United States.

3.4 AIR RESOURCES

Equipment operation, activities, or processes will be in accordance with 40 CFR 64 and state air emission and performance laws and standards.

3.4.1 Burning

Burning is prohibited on the Government premises.

3.4.2 Dust Control

Keep dust down at all times, including during nonworking periods. Sprinkle or treat, with dust suppressants, the soil at the site, haul roads, and other areas disturbed by operations. Dry power brooming will not be permitted. Instead, use vacuuming, wet mopping, wet sweeping, or wet power brooming. Air blowing will be permitted only for cleaning nonparticulate debris such as steel reinforcing bars. Only wet cutting will be permitted for cutting concrete blocks, concrete, and bituminous concrete. Do not unnecessarily shake bags of cement, concrete mortar, or plaster.

3.4.2.1 Particulates

Dust particles, aerosols and gaseous by-products from construction activities, and processing and preparation of materials (such as from asphaltic batch plants) must be controlled at all times, including weekends, holidays, and hours when work is not in progress. Maintain excavations, stockpiles, haul roads, permanent and temporary access roads, plant sites, spoil areas, borrow areas, and other work areas within or outside the project boundaries free from particulates that would exceed 40 CFR 50, state, and local air pollution standards or that would cause a hazard or a nuisance. Sprinkling, chemical treatment of an approved type, baghouse, scrubbers, electrostatic precipitators, or other methods will be permitted to control particulates in the work area. Sprinkling, to be efficient, must be repeated to keep the disturbed area damp. Provide sufficient, competent equipment available to accomplish these tasks. Perform particulate control as the work proceeds and whenever a particulate nuisance or hazard occurs. Comply with state and local visibility regulations.

3.4.2.2 Abrasive Blasting

Blasting operations cannot be performed without prior approval of the Installation Air Program Manager. The use of silica sand is prohibited in sandblasting.

Provide tarpaulin drop cloths and windscreens to enclose abrasive blasting operations to confine and collect dust, abrasive agent, paint chips, and other debris. Perform work involving removal of hazardous material in accordance with 29 CFR 1910.

3.4.3 Odors

Control odors from construction activities. The odors must be in compliance with state regulations and local ordinances and may not constitute a health hazard.

3.5 WASTE MINIMIZATION

Minimize the use of hazardous materials and the generation of waste. Include procedures for pollution prevention/ hazardous waste minimization in the Hazardous Waste Management Section of the EPP. Obtain a copy of the installation's Pollution Prevention/Hazardous Waste Minimization Plan for reference material when preparing this part of the EPP. If no written plan exists, obtain information by contacting the Contracting Officer. Describe the anticipated types of the hazardous materials to be used in the construction when requesting information.

3.5.1 Salvage, Reuse and Recycle

Identify anticipated materials and waste for salvage, reuse, and recycling. Describe actions to promote material reuse, resale or recycling. To the extent practicable, all scrap metal must be sent for reuse or recycling and will not be disposed of in a landfill.

Include the name, physical address, and telephone number of the hauler, if transported by a franchised solid waste hauler. Include the destination and, unless exempted, provide a copy of the state or local permit (cover) or license for recycling.

3.5.2 Nonhazardous Solid Waste Diversion Report

Maintain an inventory of nonhazardous solid waste diversion and disposal of construction and demolition debris. Submit a report to the Contracting Officer on the first working day after each fiscal year quarter, starting the first quarter that nonhazardous solid waste has been generated. Include the following in the report:

Construction and Demolition (C&D) Debris Disposed	[_____] tons, as appropriate
C&D Debris Recycled	[_____] tons, as appropriate
Total C&D Debris Generated	[_____] tons, as appropriate
Waste Sent to Waste-To-Energy Incineration Plant (This amount should not be included in the recycled amount)	[_____] tons, as appropriate

3.6 WASTE MANAGEMENT AND DISPOSAL

3.6.1 Waste Determination Documentation

Complete a Waste Determination form (provided at the pre-construction

conference) for Contractor-derived wastes to be generated. All potentially hazardous solid waste streams that are not subject to a specific exclusion or exemption from the hazardous waste regulations (e.g. scrap metal, domestic sewage) or subject to special rules, (lead-acid batteries and precious metals) must be characterized in accordance with the requirements of 40 CFR 261 or corresponding applicable state or local regulations. Base waste determination on user knowledge of the processes and materials used, and analytical data when necessary. Consult with the Installation environmental staff for guidance on specific requirements. Attach support documentation to the Waste Determination form. As a minimum, provide a Waste Determination form for the following waste (this listing is not inclusive): abrasive blast media, paint chips, oil- and latex -based painting and caulking products, solvents, adhesives, aerosols, petroleum products, and containers of the original materials.

3.6.1.1 Sampling and Analysis of Waste

3.6.1.1.1 Waste Sampling

Sample waste in accordance with EPA SW-846. Clearly mark each sampled drum or container with the Contractor's identification number, and cross reference to the chemical analysis performed.

3.6.1.1.2 Laboratory Analysis

Follow the analytical procedure and methods in accordance with the 40 CFR 261. Provide analytical results and reports performed to the Contracting Officer.

3.6.1.1.3 Analysis Type

Identify hazardous waste by analyzing for the following characteristics: toxicity based on TCLP results.

3.6.2 Solid Waste Management

3.6.2.1 Solid Waste Management Report

Provide copies of the waste handling facilities' weight tickets, receipts, bills of sale, and other sales documentation. In lieu of sales documentation, a statement indicating the disposal location for the solid waste that is signed by an employee authorized to legally obligate or bind the firm may be submitted. The sales documentation must include the receiver's tax identification number and business, EPA or state registration number, along with the receiver's delivery and business addresses and telephone numbers. For each solid waste retained for the Contractor's own use, submit the information previously described in this paragraph on the solid waste disposal report. Prices paid or received do not have to be reported to the Contracting Officer unless required by other provisions or specifications of this Contract or public law.

3.6.2.2 Control and Management of Solid Wastes

Pick up solid wastes, and place in covered containers that are regularly emptied. Do not prepare or cook food on the project site. Prevent contamination of the site or other areas when handling and disposing of wastes. At project completion, leave the areas clean. Employ segregation measures so that no hazardous or toxic waste will become co-mingled with non-hazardous solid waste. Transport solid waste off Government property

and dispose of it in compliance with 40 CFR 260, state, and local requirements for solid waste disposal. A Subtitle D RCRA permitted landfill is the minimum acceptable offsite solid waste disposal option. Verify that the selected transporters and disposal facilities have the necessary permits and licenses to operate. Segregate and separate treated wood components disposed at a lined landfill approved to accept this waste in accordance with local and state regulations. Solid waste disposal offsite must comply with most stringent local, state, and federal requirements, including 40 CFR 241, 40 CFR 243, and 40 CFR 258.

Manage hazardous material used in construction, including but not limited to, aerosol cans, waste paint, cleaning solvents, contaminated brushes, and used rags, in accordance with 49 CFR 173.

3.6.3 Control and Management of Hazardous Waste

Do not dispose of hazardous waste on Government property. Do not discharge any waste to a sanitary sewer, storm drain, or to surface waters or conduct waste treatment or disposal on Government property without written approval of the Contracting Officer.

3.6.3.1 Hazardous Waste/Debris Management

Identify construction activities that will generate hazardous waste or debris. Provide a documented waste determination for resultant waste streams. Identify, label, handle, store, and dispose of hazardous waste or debris in accordance with federal, state, and local regulations, including 40 CFR 261, 40 CFR 262, 40 CFR 263, 40 CFR 264, 40 CFR 265, 40 CFR 266, and 40 CFR 268.

Manage hazardous waste in accordance with the approved Hazardous Waste Management Section of the EPP. Store hazardous wastes in approved containers in accordance with 49 CFR 173 and 49 CFR 178. Hazardous waste generated within the confines of Government facilities is identified as being generated by the Government. Prior to removal of any hazardous waste from Government property, hazardous waste manifests must be signed by personnel from the Installation Environmental Office. Do not bring hazardous waste onto Government property. Provide the Contracting Officer with a copy of waste determination documentation for any solid waste streams that have any potential to be hazardous waste or contain any chemical constituents listed in 40 CFR 372-SUBPART D.

3.6.3.2 Waste Storage/Satellite Accumulation/90 Day Storage Areas

Accumulate hazardous waste at satellite accumulation points and in compliance with 40 CFR 262.34 and applicable state or local regulations. Individual waste streams will be limited to 55 gallons of accumulation (or 1 quart for acutely hazardous wastes). If the Contractor expects to generate hazardous waste at a rate and quantity that makes satellite accumulation impractical, the Contractor may request a temporary 90 day accumulation point be established. Submit a request in writing to the Contracting Officer and provide the following information (Attach Site Plan to the Request):

Contract Number	[_____]
Contractor	[_____]

Contract Number	[_____]
Haz/Waste or Regulated Waste POC	[_____]
Phone Number	[_____]
Type of Waste	[_____]
Source of Waste	[_____]
Emergency POC	[_____]
Phone Number	[_____]
Location of the Site	[_____]

Attach a Waste Determination form for the expected waste streams. Allow 10 working days for processing this request. Additional compliance requirements (e.g. training and contingency planning) that may be required are the responsibility of the Contractor. Barricade the designated area where waste is being stored and post a sign identifying as follows:

"DANGER - UNAUTHORIZED PERSONNEL KEEP OUT"

3.6.3.3 Hazardous Waste Disposal

3.6.3.3.1 Responsibilities for Contractor's Disposal

Provide hazardous waste manifest to the Installations Environmental Office for review, approval, and signature prior to shipping waste off Government property.

3.6.3.3.1.1 Services

Provide service necessary for the final treatment or disposal of the hazardous material or waste in accordance with 40 CFR 260, local, and state, laws and regulations, and the terms and conditions of the Contract within 60 days after the materials have been generated. These services include necessary personnel, labor, transportation, packaging, detailed analysis (if required for disposal or transportation, include manifesting or complete waste profile sheets, equipment, and compile documentation).

3.6.3.3.1.2 Samples

Obtain a representative sample of the material generated for each job done to provide waste stream determination.

3.6.3.3.1.3 Analysis

Analyze each sample taken and provide analytical results to the Contracting Officer. See paragraph WASTE DETERMINATION DOCUMENTATION.

3.6.3.3.1.4 Labeling

Determine the Department of Transportation's (DOT's) proper shipping names for waste (each container requiring disposal) and demonstrate to the Contracting Officer how this determination is developed and supported by the sampling and analysis requirements contained herein. Label all

containers of hazardous waste with the words "Hazardous Waste" or other words to describe the contents of the container in accordance with 40 CFR 262.31 and applicable state or local regulations.

3.6.3.3.2 Contractor Disposal Turn-In Requirements

Hazardous waste generated must be disposed of in accordance with the following conditions to meet installation requirements:

a. Drums must be compatible with waste contents and drums must meet DOT requirements for 49 CFR 173 for transportation of materials.

b. Band drums to wooden pallets.

c. No more than three 55 gallon drums or two 85 gallon over packs are to be banded to a pallet.

d. Band using 1-1/4 inch minimum band on upper third of drum.

e. Provide label in accordance with 49 CFR 172.101.

f. Leave 3 to 5 inches of empty space above volume of material.

3.6.3.4 Universal Waste Management

Manage the following categories of universal waste in accordance with federal, state, and local requirements and installation instructions:

a. Batteries as described in 40 CFR 273.2

b. Lamps as described in 40 CFR 273.5

c. Mercury-containing equipment as described in 40 CFR 273.4

Mercury is prohibited in the construction of this facility, unless specified otherwise, and with the exception of mercury vapor lamps and fluorescent lamps. Dumping of mercury-containing materials and devices such as mercury vapor lamps, fluorescent lamps, and mercury switches, in rubbish containers is prohibited. Remove without breaking, pack to prevent breakage, and transport out of the activity in an unbroken condition for disposal as directed.

3.6.3.5 Disposal Documentation for Hazardous and Regulated Waste

Contact the Contracting Officer for the facility RCRA identification number that is to be used on each manifest.

3.6.4 Releases/Spills of Oil and Hazardous Substances

3.6.4.1 Response and Notifications

Exercise due diligence to prevent, contain, and respond to spills of hazardous material, hazardous substances, hazardous waste, sewage, regulated gas, petroleum, lubrication oil, and other substances regulated in accordance with 40 CFR 300. Maintain spill cleanup equipment and materials at the work site. In the event of a spill, take prompt, effective action to stop, contain, curtail, or otherwise limit the amount, duration, and severity of the spill/release. In the event of any releases of oil and hazardous substances, chemicals, or gases; immediately (within

15 minutes) notify the Installation Fire Department, the Installation Command Duty Officer, the Installation Environmental Office, the Contracting Officer and the state or local authority.

Submit verbal and written notifications as required by the federal (40 CFR 300.125 and 40 CFR 355), state, local regulations and instructions. Provide copies of the written notification and documentation that a verbal notification was made within 20 days. Spill response must be in accordance with 40 CFR 300 and applicable state and local regulations. Contain and clean up these spills without cost to the Government.

3.6.4.2 Clean Up

Clean up hazardous and non-hazardous waste spills. Reimburse the Government for costs incurred including sample analysis materials, clothing, equipment, and labor if the Government will initiate its own spill cleanup procedures, for Contractor- responsible spills, when: Spill cleanup procedures have not begun within one hour of spill discovery/occurrence; or, in the Government's judgment, spill cleanup is inadequate and the spill remains a threat to human health or the environment.

3.6.5 Mercury Materials

Immediately report to the Environmental Office and the Contracting Officer instances of breakage or mercury spillage. Clean mercury spill area to the satisfaction of the Contracting Officer.

Do not recycle a mercury spill cleanup; manage it as a hazardous waste for disposal.

3.6.6 Wastewater

Disposal of wastewater must be as specified below.

3.6.6.1 Treatment

Do not allow wastewater from construction activities, such as onsite material processing, drilling, concrete curing, foundation and concrete clean-up, water used in concrete trucks, and forms to enter water ways or to be discharged prior to being treated to remove pollutants. Dispose of the construction- related waste water off-Government property in accordance with 40 CFR 403, state, regional, and local laws and regulations.

3.6.6.2 Surface Discharge

For discharge of ground water, obtain a state or federal permit specific for pumping and discharging ground water prior to surface discharging. Surface discharge in accordance with federal, state, and local laws and regulations.

3.7 HAZARDOUS MATERIAL MANAGEMENT

Include hazardous material control procedures in the Safety Plan, in accordance with Section 01 35 26 GOVERNMENTAL SAFETY REQUIREMENTS. Address procedures and proper handling of hazardous materials, including the appropriate transportation requirements. Do not bring hazardous

material onto Government property that does not directly relate to requirements for the performance of this contract. Submit an SDS and estimated quantities to be used for each hazardous material to the Contracting Officer prior to bringing the material on the installation. Typical materials requiring SDS and quantity reporting include, but are not limited to, oil and latex based painting and caulking products, solvents, adhesives, aerosol, and petroleum products. Use hazardous materials in a manner that minimizes the amount of hazardous waste generated. Containers of hazardous materials must have National Fire Protection Association labels or their equivalent. Certify that hazardous materials removed from the site are hazardous materials and do not meet the definition of hazardous waste, in accordance with 40 CFR 261.

3.8 PREVIOUSLY USED EQUIPMENT

Clean previously used construction equipment prior to bringing it onto the project site. Equipment must be free from soil residuals, egg deposits from plant pests, noxious weeds, and plant seeds. Consult with the U.S. Department of Agriculture jurisdictional office for additional cleaning requirements.

3.9 CONTROL AND MANAGEMENT OF ASBESTOS-CONTAINING MATERIAL (ACM)

Manage and dispose of asbestos- containing waste in accordance with 40 CFR 61. Manifest asbestos-containing waste and provide the manifest to the Contracting Officer. Notifications to the state and Installation Air Program Manager are required before starting any asbestos work.

3.10 CONTROL AND MANAGEMENT OF LEAD-BASED PAINT (LBP)

Manage and dispose of lead-contaminated waste in accordance with 40 CFR 745. Manifest any lead-contaminated waste and provide the manifest to the Contracting Officer.

3.11 CONTROL AND MANAGEMENT OF POLYCHLORINATED BIPHENYLS (PCBS)

Manage and dispose of PCB-contaminated waste in accordance with 40 CFR 761.

3.12 CONTROL AND MANAGEMENT OF LIGHTING BALLAST AND LAMPS CONTAINING PCBS

Manage and dispose of contaminated waste in accordance with 40 CFR 761.

3.13 PETROLEUM, OIL, LUBRICANT (POL) STORAGE AND FUELING

POL products include flammable or combustible liquids, such as gasoline, diesel, lubricating oil, used engine oil, hydraulic oil, mineral oil, and cooking oil. Store POL products and fuel equipment and motor vehicles in a manner that affords the maximum protection against spills into the environment. Manage and store POL products in accordance with EPA 40 CFR 112, and other federal, state, regional, and local laws and regulations. Use secondary containments, dikes, curbs, and other barriers, to prevent POL products from spilling and entering the ground, storm or sewer drains, stormwater ditches or canals, or navigable waters of the United States. Describe in the EPP (see paragraph ENVIRONMENTAL PROTECTION PLAN) how POL tanks and containers must be stored, managed, and inspected and what protections must be provided. Storage of oil, including fuel, on the project site is not allowed.

3.13.1 Used Oil Management

Manage used oil generated on site in accordance with 40 CFR 279. Determine if any used oil generated while onsite exhibits a characteristic of hazardous waste. Used oil containing 1,000 parts per million of solvents is considered a hazardous waste and disposed of at the Contractor's expense. Used oil mixed with a hazardous waste is also considered a hazardous waste. Dispose in accordance with paragraph HAZARDOUS WASTE DISPOSAL.

3.14 INADVERTENT DISCOVERY OF PETROLEUM-CONTAMINATED SOIL OR HAZARDOUS WASTES

If petroleum-contaminated soil, or suspected hazardous waste is found during construction that was not identified in the Contract documents, immediately notify the Contracting Officer. Do not disturb this material until authorized by the Contracting Officer.

3.15 SOUND INTRUSION

Make the maximum use of low-noise emission products, as certified by the EPA. Blasting or use of explosives are not permitted. Confine pile-driving operations to the period between 8 a.m. and 4 p.m., Monday through Friday, exclusive of holidays, unless otherwise specified.

Keep construction activities under surveillance and control to minimize environment damage by noise. Comply with the provisions of the State of Maine rules.

3.16 POST CONSTRUCTION CLEANUP

Clean up areas used for construction in accordance with Contract Clause: "Cleaning Up". Unless otherwise instructed in writing by the Contracting Officer, remove traces of temporary construction facilities such as haul roads, work area, structures, foundations of temporary structures, stockpiles of excess or waste materials, and other vestiges of construction prior to final acceptance of the work. Grade parking area and similar temporarily used areas to conform with surrounding contours.

-- End of Section --

SECTION 01 78 00

CLOSEOUT SUBMITTALS

PART 1 GENERAL

1.1 SUBMITTALS

Government approval is required for submittals with a "G" designation; submittals not having a "G" designation are for Contractor Quality Control approval. Submit the following in accordance with Section 01 33 00 SUBMITTAL PROCEDURES:

SD-03 Product Data

As-Built Record of Equipment and Materials; G

Warranty Management Plan; G

Final Cleaning; G

SD-08 Manufacturer's Instructions

Preventative Maintenance; G

Condition Monitoring (Predictive Testing); G

Inspection; G

Posted Instructions; G

SD-11 Closeout Submittals

Record Drawings; G

Interim Form DD1354; G

Checklist for Form DD1354; G

Certificate of Coating Compliance; G

PROJECT RECORD DOCUMENTS

1.2 Record Drawings; G

Drawings showing final as-built conditions of the project. This paragraph covers record drawings complete, as a requirement of the contract. The terms "drawings," "contract drawings," "drawing files," "working record drawings" and "final record drawings" refer to contract drawings which are revised to be used for final record drawings showing as-built conditions. The final CAD record drawings must consist of one set of electronic CAD drawing files in the specified format, 2 sets of prints, and one set of the approved working Record drawings.

1.2.1 Government Furnished Materials

One set of electronic CADD files in the specified software and format

revised to reflect all bid amendments will be provided by the Government at the preconstruction conference for projects requiring CADD file record drawings.

1.2.2 Working Record and Final Record Drawings

Revise 2 sets of paper drawings by red-line process to show the as-built conditions during the prosecution of the project. Keep these working as-built marked drawings current on a weekly basis and at least one set available on the jobsite at all times. Changes from the contract plans which are made in the work or additional information which might be uncovered in the course of construction must be accurately and neatly recorded as they occur by means of details and notes. Prepare final record (as-built) drawings after the completion of each definable feature of work as listed in the Contractor Quality Control Plan (Foundations, Utilities, Structural Steel, etc., as appropriate for the project). The working as-built marked prints and final record (as-built) drawings will be jointly reviewed for accuracy and completeness by the Contracting Officer and the Contractor prior to submission of each monthly pay estimate. If the Contractor fails to maintain the working and final record drawings as specified herein, the Contracting Officer will deduct from the monthly progress payment an amount representing the estimated cost of maintaining the record drawings. This monthly deduction will continue until an agreement can be reached between the Contracting Officer and the Contractor regarding the accuracy and completeness of updated drawings. Show on the working and final record drawings , but not limited to, the following information:

a. The actual location, kinds and sizes of all sub-surface utility lines. In order that the location of these lines and appurtenances may be determined in the event the surface openings or indicators become covered over or obscured, show by offset dimensions to two permanently fixed surface features the end of each run including each change in direction on the record drawings. Locate valves, splice boxes and similar appurtenances by dimensioning along the utility run from a reference point. Also record the average depth below the surface of each run.

b. The location and dimensions of any changes within the building structure.

c. Correct grade, elevations, cross section, or alignment of roads, earthwork, structures or utilities if any changes were made from contract plans.

d. Changes in details of design or additional information obtained from working drawings specified to be prepared and/or furnished by the Contractor; including but not limited to fabrication, erection, installation plans and placing details, pipe sizes, insulation material, dimensions of equipment foundations, etc.

e. The topography, invert elevations and grades of drainage installed or affected as part of the project construction.

f. Changes or modifications which result from the final inspection.

g. Where contract drawings or specifications present options, show only the option selected for construction on the final as-built prints.

h. If borrow material for this project is from sources on Government property, or if Government property is used as a spoil area, furnish a contour map of the final borrow pit/spoil area elevations.

i. Systems designed or enhanced by the Contractor, such as HVAC controls, fire alarm, fire sprinkler, and irrigation systems.

j. Modifications (include within change order price the cost to change working and final record drawings to reflect modifications) and compliance with the following procedures.

(1) Follow directions in the modification for posting descriptive changes.

(2) Place a Modification Delta at the location of each deletion.

(3) For new details or sections which are added to a drawing, place a Modification Delta by the detail or section title.

(4) For minor changes, place a Modification Delta by the area changed on the drawing (each location).

(5) For major changes to a drawing, place a Modification Delta by the title of the affected plan, section, or detail at each location.

(6) For changes to schedules or drawings, place a Modification Delta either by the schedule heading or by the change in the schedule.

(7) The Modification Delta size shall be 1/2 inch diameter unless the area where the circle is to be placed is crowded. Smaller size circle shall be used for crowded areas.

1.2.3 Drawing Preparation

Modify the record drawings as may be necessary to correctly show the features of the project as it has been constructed by bringing the contract set into agreement with approved working as-built prints, and adding such additional drawings as may be necessary. These working as-built marked prints must be neat, legible and accurate. These drawings are part of the permanent records of this project and must be returned to the Contracting Officer after approval by the Government. Any drawings damaged or lost by the Contractor must be satisfactorily replaced by the Contractor at no expense to the Government.

1.2.4 Payment

No separate payment will be made for record drawings required under this contract, and all costs accrued in connection with such drawings are considered a subsidiary obligation of the Contractor.

1.2.5 Certification of Coating Compliance

Provide certification from coating inspection company that all coatings have been installed (including surface preparation) according to the manufacturer's recommendations.

1.3 CERTIFICATION OF EPA DESIGNATED ITEMS

Submit the Certification of EPA Designated Items as required by FAR

52.223-9, "Certification and Estimate of Percentage of Recovered Material Content for EPA Designated Items". Include on the certification form the following information: project name, project number, Contractor name, license number, Contractor address, and certification. The certification will read as follows and be signed and dated by the Contractor. "I hereby certify the information provided herein is accurate and that the requisition/procurement of all materials listed on this form comply with current EPA standards for recycled/recovered materials content. The following exemptions may apply to the non-procurement of recycled/recovered content materials: 1) The product does not meet appropriate performance standards; 2) The product is not available within a reasonable time frame; 3) The product is not available competitively (from two or more sources); 4) The product is only available at an unreasonable price (compared with a comparable non-recycled content product)." Record each product used in the project that has a requirement or option of containing recycled content, noting total price, total value of post-industrial recycled content, total value of post-consumer recycled content, exemptions (1, 2, 3, or 4, as indicated), and comments. Recycled content values may be determined by weight or volume percent, but must be consistent throughout.

1.4 WARRANTY MANAGEMENT

1.4.1 Performance Bond

The Contractor's Performance Bond must remain effective throughout the construction period.

a. In the event the Contractor fails to commence and diligently pursue any construction warranty work required, the Contracting Officer will have the work performed by others, and after completion of the work, will charge the remaining construction warranty funds of expenses incurred by the Government while performing the work, including, but not limited to administrative expenses.

b. In the event sufficient funds are not available to cover the construction warranty work performed by the Government at the Contractor's expense, the Contracting Officer will have the right to recoup expenses from the bonding company.

c. Following oral or written notification of required construction warranty repair work, respond in a timely manner. Written verification will follow oral instructions. Failure of the Contractor to respond will be cause for the Contracting Officer to proceed against the Contractor.

1.5 CLEANUP

Leave premises "broom clean." Clean debris from roofs, gutters, downspouts and drainage systems. Sweep paved areas and rake clean landscaped areas. Remove waste and surplus materials, rubbish and construction facilities from the site.

PART 2 PRODUCTS

Not used.

PART 3 EXECUTION

Not used. -- End of Section --

SECTION 01 78 23

OPERATION AND MAINTENANCE DATA

PART 1 GENERAL

1.1 OPERATION AND MAINTENANCE DATA

Submit Operation and Maintenance (O&M) Data for the provided equipment, product, or system, defining the importance of system interactions, troubleshooting, and long-term preventive operation and maintenance. Compile, prepare, and aggregate O&M data to include clarifying and updating the original sequences of operation to as-built conditions. Organize and present information in sufficient detail to clearly explain O&M requirements at the system, equipment, component, and subassembly level. Include an index preceding each submittal. Submit in accordance with this section and Section 01 33 00 SUBMITTAL PROCEDURES.

1.1.1 Package Quality

Documents must be fully legible. Operation and Maintenance data must be consistent with the manufacturer's standard brochures, schematics, printed instructions, general operating procedures, and safety precautions.

1.1.2 Package Content

Provide data package content in accordance with paragraph SCHEDULE OF OPERATION AND MAINTENANCE DATA PACKAGES. Comply with the data package requirements specified in the individual technical sections, including the content of the packages and addressing each product, component, and system designated for data package submission.

1.1.3 Changes to Submittals

Provide manufacturer-originated changes or revisions to submitted data if a component of an item is so affected subsequent to acceptance of the O&M Data. Submit changes, additions, or revisions required by the Contracting Officer for final acceptance of submitted data within 30 calendar days of the notification of this change requirement.

1.2 OPERATION AND MAINTENANCE MANUAL FILE FORMAT

Assemble data packages into electronic Operation and Maintenance Manuals. Assemble each manual into a composite electronically indexed file using the most current version of Adobe Acrobat or similar software capable of producing PDF file format. Provide compact disks (CD) or data digital versatile disk (DVD) as appropriate, so that each one contains operation, maintenance and record files, project record documents, and training videos. Include a complete electronically linked operation and maintenance directory.

1.2.1 Organization

Bookmark Product and Drawing Information documents using the current version of CSI MasterFormat numbering system, and arrange submittals using the specification sections as a structure. Use CSI MasterFormat and UFGS numbers along with descriptive bookmarked titles that explain the content

of the information that is being bookmarked.

1.2.2 CD or DVD Label and Disk Holder or Case

Provide the following information on the disk label and disk holder or case:

a. Building Number

b. Project Title

c. Activity and Location

d. Construction Contract Number

e. Prepared For: (Contracting Agency)

f. Prepared By: (Name, title, phone number and email address)

g. Include the disk content on the disk label

h. Date

i. Virus scanning program used

1.3 TYPES OF INFORMATION REQUIRED IN O&M DATA PACKAGES

The following are a detailed description of the data package items listed in paragraph SCHEDULE OF OPERATION AND MAINTENANCE DATA PACKAGES.

1.3.1 Operating Instructions

Provide specific instructions, procedures, and illustrations for the following phases of operation for the installed model and features of each system:

1.3.1.1 Safety Precautions and Hazards

List personnel hazards and equipment or product safety precautions for operating conditions. List all residual hazards identified in the Activity Hazard Analysis provided under Section 01 35 26 GOVERNMENT SAFETY REQUIREMENTS. Provide recommended safeguards for each identified hazard.

1.3.1.2 Operator Service Requirements

Provide instructions for services to be performed by the operator such as lubrication, adjustment, inspection, and recording gauge readings.

1.3.1.3 Environmental Conditions

Provide a list of Environmental Conditions (temperature, humidity, and other relevant data) that are best suited for the operation of each product, component or system. Describe conditions under which the item equipment should not be allowed to run.

1.3.2 Repair

Provide manufacturer's recommended procedures and instructions for correcting problems and making repairs for the installed model and

features of each system.

1.3.2.1 Troubleshooting Guides and Diagnostic Techniques

Provide step-by-step procedures to promptly isolate the cause of typical malfunctions. Describe clearly why the checkout is performed and what conditions are to be sought. Identify tests or inspections and test equipment required to determine whether parts and equipment may be reused or require replacement.

1.3.2.2 Wiring Diagrams and Control Diagrams

Provide point-to-point drawings of wiring and control circuits including factory-field interfaces. Provide a complete and accurate depiction of the actual job specific wiring and control work. On diagrams, number electrical and electronic wiring and pneumatic control tubing and the terminals for each type, identically to actual installation configuration and numbering.

1.3.2.3 Repair Procedures

Provide instructions and a list of tools required to repair or restore the product or equipment to proper condition or operating standards.

1.3.2.4 Removal and Replacement Instructions

Provide step-by-step procedures and a list of required tools and supplies for removal, replacement, disassembly, and assembly of components, assemblies, subassemblies, accessories, and attachments. Provide tolerances, dimensions, settings and adjustments required. Use a combination of text and illustrations.

1.3.2.5 Spare Parts and Supply Lists

Provide lists of spare parts and supplies required for repair to ensure continued service or operation without unreasonable delays. Special consideration is required for facilities at remote locations. List spare parts and supplies that have a long lead-time to obtain.

1.3.3 Appendices

Provide information required below and information not specified in the preceding paragraphs but pertinent to the maintenance or operation of the product or equipment. Include the following:

1.3.3.1 Product Submittal Data

Provide a copy of SD-03 Product Data submittals documented with the required approval.

1.3.3.2 Certificates

Provide a copy of SD-07 Certificates submittals documented with the required approval.

1.3.3.3 Manufacturer's Instructions

Provide a copy of SD-08 Manufacturer's Instructions submittals documented with the required approval.

1.3.3.4 O&M Submittal Data

Provide a copy of SD-10 Operation and Maintenance Data submittals documented with the required approval.

1.3.3.5 Parts Identification

Provide identification and coverage for the parts of each component, assembly, subassembly, and accessory of the end items subject to replacement. Include special hardware requirements, such as requirement to use high-strength bolts and nuts. Identify parts by make, model, serial number, and source of supply to allow reordering without further identification. Provide clear and legible illustrations, drawings, and exploded views to enable easy identification of the items. When illustrations omit the part numbers and description, both the illustrations and separate listing must show the index, reference, or key number that will cross-reference the illustrated part to the listed part. Group the parts shown in the listings by components, assemblies, and subassemblies in accordance with the manufacturer's standard practice. Parts data may cover more than one model or series of equipment, components, assemblies, subassemblies, attachments, or accessories, such as typically shown in a master parts catalog.

1.3.3.6 Warranty Information

List and explain the various warranties and clearly identify the servicing and technical precautions prescribed by the manufacturers or contract documents in order to keep warranties in force. Include warranty information for primary components of the system. Provide copies of warranties required by Section 01 78 00 CLOSEOUT SUBMITTALS.

1.3.3.7 Extended Warranty Information

List all warranties for products, equipment, components, and sub-components whose duration exceeds one year. For each warranty listed, indicate the applicable specification section, duration, start date, end date, and the point of contact for warranty fulfillment. Also, list or reference the specific operation and maintenance procedures that must be performed to keep the warranty valid. Provide copies of warranties required by Section 01 78 00 CLOSEOUT SUBMITTALS.

1.3.3.8 Field Test Reports and Manufacturer's Field Reports

Provide a copy of Field Test Reports (SD-06) and Manufacturer's Field Reports (SD-09) submittals documented with the required approval.

1.3.3.9 Contractor Information

Provide a list that includes the name, address, and telephone number of the General Contractor and each Subcontractor who installed the product or equipment, or system. For each item, also provide the name address and telephone number of the manufacturer's representative and service organization that can provide replacements most convenient to the project site. Provide the name, address, and telephone number of the product, equipment, and system manufacturers.

1.4 SCHEDULE OF OPERATION AND MAINTENANCE DATA PACKAGES

Provide the O&M data packages specified in individual technical sections. The information required in each type of data package follows:

1.4.1 Data Package 1

a. Safety precautions and hazards

b. Cleaning recommendations

c. Maintenance and repair procedures

d. Warranty information

e. Extended warranty information

f. Contractor information

g. Spare parts and supply list

PART 2 PRODUCTS

Not Used.

PART 3 EXECUTION

Not Used.

-- End of Section --

SECTION 01 80 00

FACILITIES PREVENTATIVE MAINTENANCE PROGRAM

PART 1 GENERAL

1.1 GENERAL

The intent of this section is for the Contractor to complete the Equipment Enrollment Form spreadsheet (Attachment #1) for systems that have been installed or demolished under this project and are listed in the USCG Approved Equipment Enrollment Catalog to assist the Coast Guard's Facilities Preventative Maintenance Program (FPMP).

At a minimum, the following items require UNIFORMAT II Level 4 designations:

a. Plumbing Systems.
b. Electrical Systems.
c. Water Systems.
d. Any Machinery or Equipment installed as part of this contract.

Spec Attachments:

a. USCG Approved Equipment Enrollment Catalog (Attachment #3, Provided electronically by USCG COR within 14-days of requesting).
b. Sample Job Plan (Attachment #2, Provided Electronically by USCG COR within 14-days of requesting).
c. Coast Guard Maintained Equipment Enrollment Form (Attachment #1, Provided Electronically by USCG COR within 14-days of requesting).

1.2 OVERVIEW

This section describes the requirements for:

a. Facilities Preventative Maintenance Program.

Refer to Section 01 78 23 OPERATION AND MAINTENANCE DATA for operation and maintenance data requirements.

1.3 REFERENCES

The publications listed below form a part of this specification to the extent referenced. The publications are referred to within the text by the basic designation only.

ASTM INTERNATIONAL (ASTM)

ASTM E1557	(2020) Standard Classification for Building Elements and Related Sitework - UNIFORMAT II

1.4 SUBMITTALS

Submit the following in accordance with Section 01 33 00 SUBMITTAL PROCEDURES:

SD-12 Submittals

Facilities Preventative Maintenance Program (FPMP)

(a) Draft Equipment Enrollment Form (EEF) of equipment inventory and PM procedures.
(b) Corrected Equipment Enrollment Form of equipment inventory and PM procedures.
(c) Final Equipment Enrollment Form of equipment inventory and PM procedures.
(d) Draft O&M items requiring new SAM's Job Plan data input.
(e) Corrected O&M items requiring new SAM's Job Plan data input.
(f) Final O&M items requiring new SAM's Job Plan data input.

Submissions

(a) Submit two (2) Draft copies of EEF, PM procedures, and SAM's Job Plan for review by the COR and USCG SAM POC.
(b) Submit two (2) Corrected copies of EEF, PM procedures, and SAM's Job Plan for review by the COR and USCG SAM POC.
(c) Submit two (2) Final copies of EEF, PM procedures, and SAM's Job Plan for review by the COR and USCG SAM POC.

PART 2 PRODUCTS

2.1 FACILITIES PREVENTATIVE MAINTENANCE PROGRAM (FPMP)

The Contractor shall develop and submit an FPMP for all newly constructed or installed infrastructure that accurately identifies the preventive maintenance required to professionally maintain each system or piece of equipment provided in this contract. Work includes, but is not limited to: identifying and documenting all facilities items, systems, equipment, and components requiring maintenance and/or special operation; identifying and documenting the preventative maintenance requirement; and supplying this information on a government provided Excel Spreadsheet. Contractor shall also list equipment that has been demolished or removed due to the project. The Government will take the Contractor supplied information and input it into the Coast Guard Shore Asset Management (SAM) system.

2.1.1 USCG Approved Equipment Enrollment Catalog

The Catalog provided is the most current list of equipment that is maintained by the Coast Guard in SAM. The items that shall be listed on the Equipment Enrollment Form are identified in attachment 3 and highlighted in yellow within the catalog electronic spreadsheet. For each piece of equipment provided or installed as part of this contract, complete the "Equipment Enrollment Form". The purpose of the USCG Approved Equipment Enrollment Catalog is as follows:

a. Lists the equipment that the Coast Guard performs preventive maintenance per standard scheduling and job plans.
b. Catalogs the equipment according ASTM E1557 "Standard Classification for Building Elements and Related Site work - UNIFORMAT II, level 4.
c. Assigns Preventive Maintenance Procedures to the equipment per the "Maintenance & Repair" tab and "Preventive Maintenance Tab" of the RS MEANS Company, "FACILITIES MAINTENANCE AND REPAIR COST DATA" publication (not provided); and
d. Assigns the SAM "Job Plan" to the respective RS Means Preventative Maintenance Procedure in a one-to-one database context.

2.1.2 "Equipment Enrollment Form" Requirements

2.1.2.1 Form Fields

The following fields are listed on the form and shall be completely filled out except where otherwise noted on the Equipment Enrollment Form. The actual equipment attribute list below may change slightly prior to the actual start of this enrollment task. Column references identified refer back to the Equipment Enrollment Catalog spreadsheet.

a. UNIFORMAT II Level IV Classification (column K).
b. Equipment Description (column AC).
c. Physical Location, broken down by Bldg Number, Floor, and Room #.
d. Manufacturer Name.
e. Model Number.
f. Serial #.
g. Installation Date.
h. Purchase Price (Cost of equipment, labor, shipping).
i. Replacement Costs (Cost of equipment only).
j. Warranty Expiration Date.
k. Equipment Attributes (Name Plate information typically indicating Size, Flow, Volume, Pressure, etc.). Reference columns AJ through AV.
l. Standard Coast Guard SAM "Job Plan" Number (column U).
m. PM Job Plan Frequency (column V).

2.1.2.2 SAM Building Numbers

Only equipment from a single SAM Location/Building # is allowed per "Equipment Enrollment Form". Allow the Coast Guard 14 days to provide a listing of all applicable SAM Location/Building #'s.

2.1.2.3 Equipment Identified for Maintenance

Equipment identified for maintenance by O&M manuals but not listed on the USCG Equipment Enrollment Catalog shall be cataloged per ASTM E1557 and listed on the equipment enrollment form. If the equipment is not listed in ASTM E1557, consult the Coast Guard for the proper naming convention.

2.1.2.3.1 RS Means Maintenance Procedures

Contractor shall review RS Means Maintenance procedures, contained within the RS MEANS FACILITIES MAINTENANCE AND REPAIR COST DATA publication, for each piece of equipment that it lists on the "Equipment Enrollment Form" but not found in the USCG Equipment Enrollment Catalog and provide new "Job Plan" in a separate document for Coast Guard modification of the SAM database. Attachment #2 provides a sample/template job plan.

As part of providing a new "job plan", the Contractor shall furnish the labor-hours, equipment cost, material cost, total in-house field, and total with overhead and profit (O&P) fields for each PM activity similar to what is provided by the RS MEANS Company's, "FACILITIES MAINTENANCE AND REPAIR COST DATA" publication.

2.1.2.3.2 Job Plan

If RS MEANS does not have a preventative maintenance plan for a specific piece of equipment, provide a detailed Job Plan using manufacturer's recommendations and sound engineering practice using template job plan.

Show associated frequencies when job plan is to be performed and include detailed preventative maintenance procedures such as inspections, tests, and adjustments, required to ensure proper and economical operation and minimize corrective maintenance. Detailed job plans include the following:

a. Safety instruction and precautions.
b. Including lock out/tag out precautions.
c. Required skill level.
d. Number of personnel needed.
e. Frequency of performing the job plan.
f. Special tools needed.
g. Parts needed.
h. Estimated time required to complete the task.
i. Lubrication schedules indicating types, grades, and capacities.

2.1.2.4 Deliverables include:

a. Electronic Excel files and formatted hard copy print-out of completed Equipment Enrollment Form (Coast Guard will complete data entry into SAM).
b. Electronic files and formatted hard copy print out of any newly created "Job Plan" for equipment applicable under paragraph entitled "Equipment Identified for Maintenance."

2.1.2.5 Number of Copies

Contractor shall submit three (3) deliverables to include a DRAFT, Corrected, and FINAL of the FPMP to the Coast Guard for review, comment, and acceptance.

2.1.2.6 Submissions

Submit the DRAFT FPMP four (4) months prior to construction completion date (CCD). Government review of the DRAFT will be 2 weeks. Submit the Corrected FPMP no later than 1 month after receiving the Government's comments on the Draft submission. Submit the FINAL FPMP no later than 2 weeks after receiving the Government's comments on the Corrected submission.

2.1.3 Qualifications

The FPMP Preparer shall have the following qualifications:

a. Possess multi-discipline technical knowledge of the operations and maintenance of building systems.
b. Experience with the type of systems that are identified in the project specification and capable of augmenting manufacturer's information to clarify operations instructions.
c. Experience preparing detailed operations and maintenance manuals for facilities of equal size and complexity as required by this contract.
d. Ability to prepare spreadsheets to be manually loaded into the Coast Guard's SAM database.
e. Experience in presenting training classes and coordinating a team of manufacturer's representatives to provide training for facility users and maintenance personnel.

PART 3 EXECUTION

Contractor shall provide all the requirements listed above.

-- End of Section --

Coast Guard Maintained Equipment with Corresponding Means PM Plan

Equipment Enrollment Form

To be filled out by Government (shaded blocks)

Landlord/Unit Name	Landlord OPFAC	SAM Site #	SAM Location/Bldg #	SAM Location Description
			SAM Location # 4542342 = Bldg 3159	Bldg 3159

To be filled out by Contractor (white blocks)

Uniformat II Level 4	Equipment Description	Physical Location			Manufacturer Name	Model #	Serial #	Installation Date	Purchase Price[1]	Replacement Cost[2]	Warranty Expiration Date	Equipment Attributes[3] (Identification/Name Plate Information)	CG SAM "JOB PLAN" Number: (Correlates with a RS Means Preventative Maintenance Ref number - See Appendix O&M Parts 1&3)	PM Job Plan(s) w/ Frequency (i.e. 1921-M, 1920-Q, 1919-A)
		Bldg #	Floor	Room #										
D304008	*e.g. Air Handling Unit*	*3159*	*1st*	*Boiler Rm*	*Carrier*	*YE3666OER21*	*7112LO3306*	*10/1/2004*	*$ 1,200.00*	*$ 500.00*	*10/1/2005*	*300 CFM, 480V, Phase 3, 5 ton*	*1780-Q, 1778-A*	*Q/A*
D202002	*e g. Backflow Preventer*	*3159*	*1st*	*Mech Rm*	*Watts*	*900*	*112112*	*1/1/2000*	*$ 4,500.00*	*$ 1,200.00*	*1/1/2001*	*2.5 IN*	*1972-A*	*A*
D303002	*e.g. Condensing Unit*	*3159*	*Roof*	*N/A*	*Trane*	*TTTR025C10*	*L204P9GAF*	*5/15/1996*	*$ 2,500.00*	*$ 1,000.00*	*5/15/1997*	*R-22, 4.2lbs, 300/300 PSI*	*1826Q, 1825A*	*Q/A*
D302002	*e.g. Hot Water Boiler*	*3159*	*1st*	*Mech Rm*	*Cleaver Brooks*	*MCF*	*MB586*	*6/30/2012*	*$ 1,500.00*	*$ 700.00*	*6/30/2013*	*900 MBH*	*1914-M, 1913-Q, 1912-A*	*M/Q/A*
D302003	*e.g. Package Unit Forced Air, Gas*	*3159*	*N/A*	*N/A*	*York*	*D2NX04D09*	*N1D0784403*	*9/15/2008*	*$ 3,000.00*	*$ 1,500.00*	*9/15/2009*	*250 MBH, R-22, 6.3lbs, 278/144*	*1937Q, 1936A*	*Q/A*
B301099	*e.g. Roof*	*3159*	*Roof*	*N/A*	*N/A*	*N/A*	*N/A*	*1/1/1990*	*$ 25,000.00*	*$ 10,000.00*	*1/1/2015*	*10700 SF, Shingles*	*9069-A*	*A*

General Instructions:

1. Purchase Price: Total cost of installation to include cost of equipment, labor, shipping, etc…
2. Replacement Cost: Cost of equipment only.
3. Equipment Attributes: To include sizes (i.e. motor HP, SF, LF, etc…), capacities (other than size), and ratings.

SECTION 02 41 00

DEMOLITION

PART 1 GENERAL

1.1 REFERENCES

The publications listed below form a part of this specification to the extent referenced. The publications are referred to within the text by the basic designation only.

AMERICAN SOCIETY OF SAFETY PROFESSIONALS (ASSP)

ASSP A10.6	(2006) Safety & Health Program Requirements for Demolition Operations - American National Standard for Construction and Demolition Operations

U.S. ARMY CORPS OF ENGINEERS (USACE)

EM 385-1-1	(2014) Safety and Health Requirements Manual

U.S. NATIONAL ARCHIVES AND RECORDS ADMINISTRATION (NARA)

40 CFR 61	National Emission Standards for Hazardous Air Pollutants

1.2 PROJECT DESCRIPTION

1.2.1 Demolition Plan

Prepare a Demolition Plan and submit proposed demolition and removal procedures for approval before work is started. Include in the plan procedures for careful removal and disposition of materials specified to be salvaged, coordination with other work in progress, a disconnection schedule of utility services, and a detailed description of methods and equipment to be used for each operation and of the sequence of operations. Coordinate with Waste Management Plan. Provide procedures for safe conduct of the work in accordance with EM 385-1-1. Plan shall be approved by Contracting Officer prior to work beginning.

1.2.2 General Requirements

Do not begin demolition or deconstruction until authorization is received from the Contracting Officer. Remove rubbish and debris from the project site; do not allow accumulations. The work includes demolition, salvage of identified items and materials, and removal of resulting rubbish and debris. Remove rubbish and debris from Government property daily, unless otherwise directed. Store materials that cannot be removed daily in areas specified by the Contracting Officer. In the interest of occupational safety and health, perform the work in accordance with EM 385-1-1, Section 23, Demolition, and other applicable Sections.

1.3 ITEMS TO REMAIN IN PLACE

Take necessary precautions to avoid damage to existing items to remain in place, to be reused, or to remain the property of the Government. Repair or replace damaged items as approved by the Contracting Officer. Coordinate the work of this section with all other work indicated. Construct and maintain shoring, bracing, and supports as required. Ensure that structural elements are not overloaded. Repairs, reinforcement, or structural replacement require approval by the Contracting Officer prior to performing such work.

1.3.1 Existing Construction Limits and Protection

Do not disturb existing construction beyond the extent indicated or necessary for installation of new construction. Provide protective measures to control accumulation and migration of dust and dirt in all work areas. Remove dust, dirt, and debris from work areas daily.

1.3.2 Utility Service

Maintain existing utilities indicated to stay in service and protect against damage during demolition and deconstruction operations.

1.3.3 Facilities

Protect electrical and mechanical services and utilities. Where removal of existing utilities and pavement is specified or indicated, provide approved barricades, temporary covering of exposed areas, and temporary services or connections for electrical and mechanical utilities. Ensure that no elements determined to be unstable are left unsupported and place and secure bracing, shoring, or lateral supports as may be required as a result of any cutting, removal, deconstruction, or demolition work performed under this contract.

1.4 BURNING

The use of burning at the project site for the disposal of refuse and debris will not be permitted.

1.5 AVAILABILITY OF WORK AREAS

Areas in which the work is to be accomplished will be available in accordance with the Demolition/Repair Plan. The Contractor must provide public access to the gloating dock at the required times.

1.6 SUBMITTALS

Government approval is required for submittals with a "G" designation; submittals not having a "G" designation are for Contractor Quality Control approval. Submit the following in accordance with Section 01 33 00 SUBMITTAL PROCEDURES:

SD-01 Preconstruction Submittals

Demolition Plan; G

SD-07 Certificates

Demolition Plan; G

SD-11 Closeout Submittals

Receipts of Approved Disposal; G

1.7 QUALITY ASSURANCE

Submit timely notification of demolition projects to Federal, State, regional, and local authorities in accordance with 40 CFR 61, Subpart M. Notify the Regional Office of the United States Environmental Protection Agency (USEPA) and the Contracting Officer in writing 10 working days prior to the commencement of work in accordance with 40 CFR 61, Subpart M. Comply with federal, state, and local hauling and disposal regulations. In addition to the requirements of the "Contract Clauses," conform to the safety requirements contained in ASSP A10.6. Comply with the Environmental Protection Agency requirements specified. Use of explosives will not be permitted.

1.7.1 Dust and Debris Control

Prevent the spread of dust and debris and avoid the creation of a nuisance in the surrounding area. Do not use water if it results in hazardous or objectionable conditions such as, but not limited to, ice, flooding, or pollution.

1.8 PROTECTION

1.8.1 Traffic Control Signs

a. Where pedestrian and driver safety is endangered in the area of removal work, use traffic barricades with flashing lights. Anchor barricades in a manner to prevent displacement by wind. Notify the Contracting Officer prior to beginning such work.

1.8.2 Protection of Personnel

Before, during and after the demolition work continuously evaluate the condition of the structure being demolished and take immediate action to protect all personnel working in and around the project site. No area, section, or component of floors, roofs, walls, columns, pilasters, or other structural element will be allowed to be left standing without sufficient bracing, shoring, or lateral support to prevent collapse or failure while workmen remove debris or perform other work in the immediate area.

1.9 RELOCATIONS

Perform the removal and reinstallation of relocated items as indicated with workmen skilled in the trades involved. Repair or replace items to be relocated which are damaged by the Contractor with new undamaged items as approved by the Contracting Officer.

PART 2 PRODUCTS

Not used.

PART 3 EXECUTION

3.1 EXISTING FACILITIES TO BE REMOVED

Inspect and evaluate existing structures onsite for reuse. Existing construction scheduled to be removed for reuse shall be disassembled. Dismantled and removed materials are to be separated, set aside, and prepared as specified, and stored or delivered to a collection point for reuse, remanufacture, recycling, or other disposal, as specified. Materials shall be designated for reuse onsite whenever possible.

3.1.1 Structures

a. Remove existing structures indicated.

b. Demolish structures in a systematic manner from the top of the structure to the base Complete demolition work above each section before members on lower sections are disturbed.

3.1.2 Utilities and Related Equipment

3.1.2.1 General Requirements

Do not interrupt existing utilities serving occupied or used facilities, except when authorized in writing by the Contracting Officer. Do not interrupt existing utilities serving facilities occupied and used by the Government except when approved in writing and then only after temporary utility services have been approved and provided. Do not begin demolition or deconstruction work until all utility disconnections have been made.

3.1.2.2 Existing Utilities

When utility lines are encountered but are not indicated on the drawings, notify the Contracting Officer prior to further work in that area.

3.1.3 Paving and Slabs

Provide neat sawcuts at limits of pavement removal as indicated. Pavement and slabs designated to be recycled and utilized in this project shall be moved, ground and stored as directed by the Contracting Officer. Pavement and slabs not to be used in this project shall be removed from the Installation at Contractor's expense.

3.1.4 Patching

Where removals leave holes and damaged surfaces exposed in the finished work, patch and repair these holes and damaged surfaces to match adjacent finished surfaces, using on-site materials when available. Where new work is to be applied to existing surfaces, perform removals and patching in a manner to produce surfaces suitable for receiving new work. Finished surfaces of patched area shall be flush with the adjacent existing surface and shall match the existing adjacent surface as closely as possible as to texture and finish.

3.2 DISPOSITION OF MATERIAL

3.2.1 Title to Materials

Except for salvaged items specified in related Sections, and for materials

or equipment scheduled for salvage, all materials and equipment removed and not reused or salvaged, shall become the property of the Contractor and shall be removed from Government property. Title to materials resulting from demolition and deconstruction, and materials and equipment to be removed, is vested in the Contractor upon approval by the Contracting Officer of the Contractor's demolition, deconstruction, and removal procedures, and authorization by the Contracting Officer to begin demolition and deconstruction. The Government will not be responsible for the condition or loss of, or damage to, such property after contract award. Showing for sale or selling materials and equipment on site is prohibited. Submit disposal receipts.

3.2.2 Reuse of Materials and Equipment

Remove and store materials and equipment indicated on the Drawings to be reused or relocated to prevent damage, and reinstall as the work progresses.

3.3 CLEANUP

Remove debris and rubbish from work areas. Remove and transport the debris in a manner that prevents spillage on streets or adjacent areas. Apply local regulations regarding hauling and disposal.

3.4 DISPOSAL OF REMOVED MATERIALS

3.4.1 Regulation of Removed Materials

Dispose of debris, rubbish, scrap, and other nonsalvageable materials resulting from removal operations with all applicable federal, state and local regulations as contractually specified in the Waste Management Plan.

-- End of Section --

SECTION 02 41 01

SILTATION CURTAINS/DEBRIS BOOMS

PART 1 GENERAL

1.1 DESCRIPTION

Provide all labor, materials, equipment and supervision necessary to complete the work specified in this Section.

1.2 SCOPE OF WORK

The scope of the work, without limiting the generality thereof, consists of furnishing all labor, materials and equipment for the following items of work and all work incidental thereto as shown on the Drawings and as herein specified.

a. Siltation curtain/debris boom shall be installed around the work barge, material handling barge, and work area to be dredged.

b. Installation of floating siltation curtain to prevent the dispersion of sediments disturbed by dredging activities.

c. Installation of floating debris boom to prevent the dispersion of construction materials from dredging activities.

1.3 RELATED WORK

Related work specified in other sections:

a. Demolition under DEMOLITION, SECTION 02 41 00.

1.4 SUBMITTALS

Government approval is required for submittals with a "G" designation; submittals not having a "G" designation are for Contractor Quality Control approval. Submit the following in accordance with Section 01 33 00 SUBMITTAL PROCEDURES:

SD-03 Product Data

Submit manufacturer's description, design (including calculations) and specifications of siltation curtain material; G

Submit manufacturer's description, design (including calculations) and specifications of debris boom material; G

PART 2 MATERIALS

2.1 SILTATION CURTAIN AND DEBRIS BOOM

Siltation curtain and debris boom shall be comprised of nonporous material and have sufficient tensile and puncture strength to perform continuously during the construction period.

PART 3 EXECUTION

3.1 ASSEMBLY

3.1.1 Siltation Curtain

a. The siltation curtain shall be continuously attached to the float over its entire length.

b. The siltation curtain shall extend from the waterline, through the water column, and terminate at the mudline for all tide cycles. The bottom shall be weighted to ensure that it remains on the mudline at all times, taking into account waves, current, and tide cycle.

c. The siltation curtain shall be secured such that it prevents the dispersion of sediments disturbed by demolition and construction activities without being a hazard to navigation.

3.1.2 Debris Boom

a. The debris boom skirt shall be continuously attached to the float over its entire length.

b. The debris boom shall extend a minimum of 2 feet below the waterline. The bottom shall be sufficiently weighted to ensure stability, taking into account waves, current, and tidal cycle.

c. The debris boom shall be secured such that it prevents the dispersion of construction materials from demolition and construction activities without being a hazard to navigation.

3.2 MAINTENANCE

The contractor shall be responsible for continuous maintenance of both the siltation curtains and debris booms to ensure performance.

Construction materials retained by both the siltation curtain and debris boom shall be removed and disposed of daily.

The siltation curtain and debris booms shall be removed at the end of the construction period and remain the property of the Contractor.

-- End of Section --

SECTION 03 20 00

CONCRETE REINFORCING

PART 1 GENERAL

1.1 REFERENCES

The publications listed below form a part of this specification to the extent referenced. The publications are referred to within the text by the basic designation only.

AMERICAN CONCRETE INSTITUTE (ACI)

ACI SP-66	(2004) ACI Detailing Manual

AMERICAN WELDING SOCIETY (AWS)

AWS D1.4/D1.4M	(2011) Structural Welding Code - Reinforcing Steel

ASTM INTERNATIONAL (ASTM)

ASTM A1035/A1035M	(2020) Standard Specification for Deformed and Plain, Low-carbon, Chromium, Steel Bars for Concrete Reinforcement
ASTM A615/A615M	(2020) Standard Specification for Deformed and Plain Carbon-Steel Bars for Concrete Reinforcement
ASTM A706/A706M	(2016) Standard Specification for Low-Alloy Steel Deformed and Plain Bars for Concrete Reinforcement
ASTM A767/A767M	(2016) Standard Specification for Zinc-Coated (Galvanized) Steel Bars for Concrete Reinforcement
ASTM A775/A775M	(2017) Standard Specification for Epoxy-Coated Steel Reinforcing Bars
ASTM A82/A82M	(2007) Standard Specification for Steel Wire, Plain, for Concrete Reinforcement
ASTM A934/A934M	(2016) Standard Specification for Epoxy-Coated Prefabricated Steel Reinforcing Bars

1.2 SUBMITTALS

Government approval is required for submittals with a "G" designation; submittals not having a "G" designation are for Contractor Quality Control approval. Submit the following in accordance with Section 01 33 00 SUBMITTAL PROCEDURES:

SD-02 Shop Drawings

Reinforcement; G

SD-03 Product Data

Welding; G

Material; G

SD-04 Samples

Epoxy-Coated Bars; G

SD-07 Certificates

Reinforcing Steel; G

1.3 QUALITY ASSURANCE

1.3.1 Welding Qualifications

Welders shall be qualified in accordance with AWS D1.4/D1.4M. Qualification test shall be performed at the worksite and notify the Contracting Officer 24 hours prior to conducting tests. Special welding procedures and welders qualified by others may be accepted as permitted by AWS D1.4/D1.4M. Submit a list of qualified welders names.

1.4 DELIVERY, STORAGE, AND HANDLING

Reinforcement and accessories shall be stored off the ground on platforms, skids, or other supports.

PART 2 PRODUCTS

2.1 REINFORCING STEEL

Reinforcing steel shall be deformed bars conforming to ASTM A615/A615M, ASTM A706/A706M, or ASTM A1035/A1035M grades and sizes as indicated. Cold drawn wire used for spiral reinforcement shall conform to ASTM A82/A82M. In highly corrosive environments or when directed by the Contracting Officer, reinforcing steel shall conform to ASTM A767/A767M, ASTM A775/A775M, ASTM A1035/A1035M or ASTM A934/A934M as appropriate.

Submit certified copies of mill reports attesting that the reinforcing steel furnished contains no less than 25 percent recycled scrap steel and meets the requirements specified herein, prior to the installation of reinforcing steel. All reinforcing steel shall be epoxy-coated.

2.1.1 Epoxy-Coated Bars

Epoxy-coated steel bars shall comply with the requirements of ASTM A775/A775M, including written certifications for coating material and coated bars, sample of coating material, and 1.5 pounds of patching material.

2.2 WIRE TIES

Wire ties shall be 16 gauge or heavier black annealed steel wire. Ties for epoxy-coated bars shall be vinyl-coated or epoxy-coated.

PART 3 EXECUTION

3.1 REINFORCEMENT

Reinforcement steel and accessories shall be fabricated and placed as specified and shown and approved shop drawings. Fabrication and placement details of steel and accessories not specified or shown shall be in accordance with ACI SP-66 and ACI 318. Reinforcement shall be cold bent unless otherwise authorized. Bending may be accomplished in the field or at the mill. Epoxy-coated bars shall be mill-bent prior to coating. Bars shall not be bent after embedment in concrete. Safety caps shall be placed on all exposed ends of vertical concrete reinforcement bars that pose a danger to life safety. Wire tie ends shall face away from the forms. Submit detail drawings showing reinforcing steel placement, schedules, sizes, grades, and splicing and bending details. Drawings shall show support details including types, sizes and spacing.

3.1.1 Placement

Reinforcement shall be free from loose rust and scale, dirt, oil, or other deleterious coating that could reduce bond with the concrete. Reinforcement shall be placed in accordance with ACI 318 at locations shown plus or minus one bar diameter. Concrete coverage shall be as indicated or as required by ACI 318. If bars are moved more than one bar diameter to avoid interference with other reinforcement, the resulting arrangement of bars, including additional bars required to meet structural requirements, shall be approved before concrete is placed.

3.1.2 Splicing

Splices of reinforcement shall conform to ACI 318 and shall be made only as required or indicated. Splicing shall be by lapping or by mechanical or welded butt connection; except that lap splices shall not be used for bars larger than No. 11 unless otherwise indicated. Welding shall conform to AWS D1.4/D1.4M. Welded butt splices shall be full penetration butt welds. Lapped bars shall be placed in contact and securely tied or spaced transversely apart to permit the embedment of the entire surface of each bar in concrete. Lapped bars shall not be spaced farther apart than one-fifth the required length of lap or 6 inches. Mechanical butt splices shall be in accordance with the recommendation of the manufacturer of the mechanical splicing device. Butt splices shall develop 125 percent of the specified minimum yield tensile strength of the spliced bars or of the smaller bar in transition splices. Bars shall be flame dried before butt splicing. Adequate jigs and clamps or other devices shall be provided to support, align, and hold the longitudinal centerline of the bars to be butt spliced in a straight line.

3.1.3 Placing Tolerances

3.1.3.1 Spacing

The spacing between adjacent bars and the distance between layers of bars may not vary from the indicated position by more than one bar diameter nor more than 1 inch.

3.1.3.2 Concrete Cover

The minimum concrete cover of main reinforcement steel bars shall be as

shown. The allowable variation for minimum cover shall be as shown on the project drawings. The minimum reinforcing cover shall be 3 inches.

Text -- End of Section --

SECTION 03 30 53

MISCELLANEOUS CAST-IN-PLACE CONCRETE

PART 1 GENERAL

1.1 SUMMARY

Perform all work in accordance withACI 318.

1.2 REFERENCES

The publications listed below form a part of this specification to the extent referenced. The publications are referred to within the text by the basic designation only.

AMERICAN CONCRETE INSTITUTE (ACI)

ACI 117	(2010; Errata 2011) Specifications for Tolerances for Concrete Construction and Materials and Commentary
ACI 301	(2016) Specifications for Structural Concrete
ACI 304R	(2000; R 2009) Guide for Measuring, Mixing, Transporting, and Placing Concrete
ACI 305R	(2010) Guide to Hot Weather Concreting
ACI 306R	(2016) Guide to Cold Weather Concreting
ACI 318	(2014; Errata 1-2 2014; Errata 3-5 2015; Errata 6 2016; Errata 7-9 2017) Building Code Requirements for Structural Concrete (ACI 318-14) and Commentary (ACI 318R-14)
ACI 347	(2004; Errata 2008; Errata 2012) Guide to Formwork for Concrete
ACI SP-66	(2004) ACI Detailing Manual

ASTM INTERNATIONAL (ASTM)

ASTM C1064/C1064M	(2017) Standard Test Method for Temperature of Freshly Mixed Hydraulic-Cement Concrete
ASTM C1157/C1157M	(2017) Standard Performance Specification for Hydraulic Cement
ASTM C1260	(2014) Standard Test Method for Potential Alkali Reactivity of Aggregates (Mortar-Bar Method)
ASTM C143/C143M	(2015) Standard Test Method for Slump of Hydraulic-Cement Concrete

ASTM C150/C150M	(2018) Standard Specification for Portland Cement
ASTM C1567	(2013) Standard Test Method for Potential Alkali-Silica Reactivity of Combinations of Cementitious Materials and Aggregate (Accelerated Mortar-Bar Method)
ASTM C1602/C1602M	(2012) Standard Specification for Mixing Water Used in Production of Hydraulic Cement Concrete
ASTM C172/C172M	(2017) Standard Practice for Sampling Freshly Mixed Concrete
ASTM C173/C173M	(2016) Standard Test Method for Air Content of Freshly Mixed Concrete by the Volumetric Method
ASTM C231/C231M	(2017a) Standard Test Method for Air Content of Freshly Mixed Concrete by the Pressure Method
ASTM C260/C260M	(2010a; R 2016) Standard Specification for Air-Entraining Admixtures for Concrete
ASTM C309	(2011) Standard Specification for Liquid Membrane-Forming Compounds for Curing Concrete
ASTM C31/C31M	(2018b) Standard Practice for Making and Curing Concrete Test Specimens in the Field
ASTM C33/C33M	(2018) Standard Specification for Concrete Aggregates
ASTM C39/C39M	(2018) Standard Test Method for Compressive Strength of Cylindrical Concrete Specimens
ASTM C494/C494M	(2017) Standard Specification for Chemical Admixtures for Concrete
ASTM C595/C595M	(2018) Standard Specification for Blended Hydraulic Cements
ASTM C618	(2017a) Standard Specification for Coal Fly Ash and Raw or Calcined Natural Pozzolan for Use in Concrete
ASTM C685/C685M	(2017) Standard Specification for Concrete Made by Volumetric Batching and Continuous Mixing
ASTM C920	(2018) Standard Specification for Elastomeric Joint Sealants
ASTM C94/C94M	(2017a) Standard Specification for

	Ready-Mixed Concrete
ASTM C989/C989M	(2018) Standard Specification for Slag Cement for Use in Concrete and Mortars
ASTM D1752	(2018) Standard Specification for Preformed Sponge Rubber, Cork and Recycled PVC Expansion Joint Fillers for Concrete Paving and Structural Construction
ASTM D412	(2016) Standard Test Methods for Vulcanized Rubber and Thermoplastic Elastomers - Tension
ASTM D471	(2016a) Standard Test Method for Rubber Property - Effect of Liquids
ASTM D75/D75M	(2019) Standard Practice for Sampling Aggregates
ASTM D98	(2015) Calcium Chloride

U.S. ARMY CORPS OF ENGINEERS (USACE)

COE CRD-C 513	(1974) Corps of Engineers Specifications for Rubber Waterstops
COE CRD-C 572	(1974) Corps of Engineers Specifications for Polyvinylchloride Waterstops

U.S. NATIONAL ARCHIVES AND RECORDS ADMINISTRATION (NARA)

40 CFR 247	Comprehensive Procurement Guideline for Products Containing Recovered Materials

1.3 SUBMITTALS

Government approval is required for submittals with a "G" designation; submittals not having a "G" designation are for Contractor Quality Control approval. Submit the following in accordance with Section 01 33 00 SUBMITTAL PROCEDURES:

SD-02 Shop Drawings

Installation Drawings; G

SD-03 Product Data

Air-Entraining Admixture; G
Accelerating Admixture; G
Water-Reducing or Retarding Admixture; G
Curing Materials; G
Expansion Joint Filler Strips, Premolded; G
Joint Sealants - Field Molded Sealants; G
Waterstops; G
Chemical Floor Hardener; G
Batching and Mixing Equipment; G
Conveying and Placing Concrete; G
Formwork; G

Mix Design Data; G
Ready-Mix Concrete; G
Curing Compound; G
Mechanical Reinforcing Bar Connectors; G

SD-06 Test Reports

Aggregates; G
Concrete Mixture Proportions; G
Measurement of Floor Tolerances; G
Compressive Strength Testing; G
Slump; G
Air Content; G
Water; G

SD-07 Certificates

Cementitious Materials; G
Pozzolan; G
CPG for recycled materials or appropriate Waiver Form; G
Aggregates; G
Delivery Tickets; G

SD-08 Manufacturer's Instructions

Chemical Floor Hardener; G
Curing Compound; G

1.4 QUALITY ASSURANCE

Indicate specific locations of Concrete Placement, Forms, Steel Reinforcement, Accessories, Expansion Joints, Construction Joints, Contraction Joints, Control Joints on installation drawings and include, but not be limited to, square feet of concrete placements, thicknesses and widths, plan dimensions, and arrangement of cast-in-place concrete section.

1.4.1 Regulatory Requirements

The state statutory and regulatory requirements form a part of this specification to the extent referenced. Submit CPG for recycled materials or appropriate Waiver Form.

PART 2 PRODUCTS

2.1 SYSTEM DESCRIPTION

The Government retains the option to sample and test aggregates and concrete to determine compliance with the specifications. Provide facilities and labor as may be necessary to assist the Government in procurement of representative test samples. Obtain samples of aggregates at the point of batching in accordance with ASTM D75/D75M. Sample concrete in accordance with ASTM C172/C172M. Determine slump and air content in accordance with ASTM C143/C143M and ASTM C231/C231M, respectively, when cylinders are molded. Prepare, cure, and transport compression test specimens in accordance with ASTM C31/C31M. Test compression test specimens in accordance with ASTM C39/C39M. Take samples for strength tests not less than once each shift in which concrete is produced. Provide a minimum of five specimens from each sample; two to be tested at 28 days (90 days if pozzolan is used) for acceptance, two will

be tested at 7 days for information and one held in reserve.

2.1.1 Strength

Acceptance test results are the average strengths of two specimens tested at 28 days (90 days if pozzolan is used). The strength of the concrete is considered satisfactory so long as the average of three consecutive acceptance test results equal or exceed the specified compressive strength, f'c, but not more than 20 percent, and no individual acceptance test result falls below f'c by more than 500 psi.

2.1.2 Construction Tolerances

Apply a Class "C" finish to all surfaces except those specified to receive a Class "D" finish. Apply a Class "D" finish to all post-construction surfaces which will be permanently concealed. Surface requirements for the classes of finish required are as specified in ACI 117.

2.1.3 Concrete Mixture Proportions

Concrete mixture proportions are the responsibility of the Contractor. Mixture proportions must include the dry weights of cementitious material(s); the nominal maximum size of the coarse aggregate; the specific gravities, absorptions, and saturated surface-dry weights of fine and coarse aggregates; the quantities, types, and names of admixtures; and quantity of water per yard of concrete. Provide materials included in the mixture proportions of the same type and from the same source as will be used on the project. The specified compressive strength f'c is 5,000 psi at 28 days (90 days if pozzolan is used). The maximum nominal size coarse aggregate is 3/4 inch, in accordance with ACI 304R. The air content must be between 6.0 and 8.0 percent with a slump between 2 and 5 inches. The maximum water-cementitious material ratio is 0.40. Submit the applicable test reports and mixture proportions that will produce concrete of the quality required, ten days prior to placement of concrete.

2.2 MATERIALS

Submit manufacturer's literature from suppliers which demonstrates compliance with applicable specifications for the specified materials.

2.2.1 Cementitious Materials

Submit Manufacturer's certificates of compliance, accompanied by mill test reports, attesting that the concrete materials meet the requirements of the specifications in accordance with the Special Clause "CERTIFICATES OF COMPLIANCE". Also, certificates for all material conforming to EPA's Comprehensive Procurement Guidelines (CPG), in accordance with 40 CFR 247. Provide cementitious materials that conform to the appropriate specifications listed:

2.2.1.1 Portland Cement

ASTM C150/C150M, Type II, with tri-calcium aluminates (C3A) content less than 10 percent and a maximum cement-alkali content of 0.80 percent Na2Oe (sodium oxide) equivalent.

2.2.1.2 Blended Hydraulic Cement

Provide blended cement conforming to ASTM C595/C595M and ASTM C1157/C1157M,

Type IP or IS, including the optional requirement for mortar expansion [and sulfate soundness] and consist of a mixture of ASTM C150/C150M Type I, or Type II cement and a complementary cementing material. The slag added to the Type IS blend must be ASTM C989/C989M ground granulated blast-furnace slag. The pozzolan added to the Type IP blend must be ASTM C618 Class F, interground with the cement clinker. Provide the manufacturer's written statement that the amount of pozzolan in the finished cement will not vary more than plus or minus 5 mass percent of the finished cement from lot-to-lot or within a lot. Do not change the percentage and type of mineral admixture used in the blend from that submitted for the aggregate evaluation and mixture proportioning.

2.2.1.3 Pozzolan

Provide pozzolan that conforms to ASTM C618, Class F, including requirements of Tables 1A and 2A.

2.2.2 Aggregates

For fine and coarse aggregates meet the quality and grading requirements of ASTM C33/C33M and test and evaluate for alkali-aggregate reactivity in accordance with ASTM C1260. Perform evaluation of fine and coarse aggregates separately and in combination, matching the proposed mix design proportioning. All results of the separate and combination testing must have a measured expansion less than 0.08 percent at 28 days after casting. If the test data indicates an expansion of 0.08 percent or greater, reject the aggregate(s) or perform additional testing using ASTM C1260 and ASTM C1567. Perform the additional testing using ASTM C1260 and ASTM C1567 using the low alkali portland cement in combination with ground granulated blast furnace (GGBF) slag, or Class F fly ash. Use GGBF slag in the range of 40 to 50 percent of the total cementitious material by mass. Use Class F fly ash in the range of 25 to 40 percent of the total cementitious material by mass]. Submit certificates of compliance and test reports for aggregates showing the material(s) meets the quality and grading requirements of the specifications under which it is furnished.

2.2.3 Admixtures

Provide admixtures, when required or approved, in compliance with the appropriate specification listed. Provide a corrosion inhibitor of 4 gal/CY or as recommended by manufacturer. Retest chemical admixtures that have been in storage at the project site, for longer than 6 months or that have been subjected to freezing, at the expense of the Contractor at the request of the Contracting Officer and will be rejected if test results are not satisfactory.

2.2.3.1 Air-Entraining Admixture

Provide air-entraining admixture that meets the requirements of ASTM C260/C260M.

2.2.3.2 Accelerating Admixture

Provide calcium chloride meeting the requirements of ASTM D98. Other accelerators must meet the requirements of ASTM C494/C494M, Type C or E.

2.2.3.3 Water-Reducing or Retarding Admixture

Provide water-reducing or retarding admixture meeting the requirements of

ASTM C494/C494M, Type A, B, or D. High-range water reducing admixture Type F may be used only when approved, approval being contingent upon particular placement requirements as described in the Contractor's Quality Control Plan.

2.2.4 Water

Mixing and curing water in compliance with the requirements of ASTM C1602/C1602M; potable, and free of injurious amounts of oil, acid, salt, or alkali. Submit test report showing water complies with ASTM C1602/C1602M.

2.2.5 Reinforcing Steel

See specification 03 20 00 CONCRETE REINFORCING.

2.2.6 Expansion Joint Filler Strips, Premolded

Expansion joint filler strips, premolded of sponge rubber conforming to ASTM D1752, Type I.

2.2.7 Joint Sealants - Field Molded Sealants

Conform to ASTM C920, Type M, Grade NS, Class 25, use NT for vertical joints and Type M, Grade P, Class 25, use T for horizontal joints. Provide polyethylene tape, coated paper, metal foil, or similar type bond breaker materials. The backup material needs to be compressible, nonshrink, nonreactive with the sealant, and a nonabsorptive material such as extruded butyl or polychloroprene foam rubber. Immediately prior to installation of field-molded sealants, clean the joint of all debris and further cleaned using water, chemical solvents, or other means as recommended by the sealant manufacturer or directed.

2.2.8 Formwork

Design and engineer the formwork as well as its construction in accordance with ACI 301 Section 2 and 5 and ACI 347. Fabricate of wood, steel, or other approved material. Submit formwork design prior to the first concrete placement.

2.2.9 Form Coatings

Provide form coating in accordance with ACI 301.

2.2.10 Curing Materials

Provide curing materials in accordance with ACI 301, Section 5.

2.3 READY-MIX CONCRETE

Provide ready-mix concrete with mix design data conforming to ACI 301 Part 2. Submit delivery tickets in accordance with ASTM C94/C94M for each ready-mix concrete delivery, include the following additional information: .

a. Type and brand cement

b. Cement content in 94-pound bags per cubic yard of concrete

c. Maximum size of aggregate

d. Amount and brand name of admixture

e. Total water content expressed by water cementitious material ratio

2.4 ACCESSORIES

2.4.1 Waterstops

2.4.1.1 PVC Waterstop

Polyvinylchloride waterstops conforming to COE CRD-C 572.

2.4.1.2 Rubber Waterstop

Rubber waterstops conforming to COE CRD-C 513.

2.4.1.3 Thermoplastic Elastomeric Rubber Waterstop

Thermoplastic elastomeric rubber waterstops conforming to ASTM D471.

2.4.1.4 Hydrophilic Waterstop

Swellable strip type compound of polymer modified chloroprene rubber that swells upon contact with water conforming to ASTM D412 as follows: Tensile strength 420 psi minimum; ultimate elongation 600 percent minimum. Minimum hardness of 50 on the type A durometer and the volumetric expansion ratio in distilled water at 70 degrees F; 3 to 1 minimum.

2.4.2 Chemical Floor Hardener

Provide hardener which is a colorless aqueous solution containing a blend of inorganic silicate or siliconate material and proprietary components combined with a wetting agent; that penetrates, hardens, and densifies concrete surfaces. Submit manufactures instructions for placement of liquid chemical floor hardener.

2.4.3 Curing Compound

Provide curing compound conforming to ASTM C309. Submit manufactures instructions for placing curing compound.

2.4.4 Epoxy for Post-installed Anchoring Systems

Provide ultimate performance injectable epoxy mortar with ICC-ES approvals for heavy duty anchoring.

PART 3 EXECUTION

3.1 PREPARATION

Prepare construction joints to expose coarse aggregate. The surface must be clean, damp, and free of laitance. Construct ramps and walkways, as necessary, to allow safe and expeditious access for concrete and workmen. Remove snow, ice, standing or flowing water, loose particles, debris, and foreign matter. Satisfactorily compact earth foundations. Make spare vibrators available. Placement cannot begin until the entire preparation has been accepted by the Government.

3.1.1 Embedded Items

Secure reinforcement in place after joints, anchors, and other embedded items have been positioned. Arrange internal ties so that when the forms are removed the metal part of the tie is not less than 2 inches from concrete surfaces permanently exposed to view or exposed to water on the finished structures. Prepare embedded items so they are be free of oil and other foreign matters such as loose coatings or rust, paint, and scale. The embedding of wood in concrete is permitted only when specifically authorized or directed. Provide all equipment needed to place, consolidate, protect, and cure the concrete at the placement site and in good operating condition.

3.1.2 Formwork Installation

Forms must be properly aligned, adequately supported, and mortar-tight. Provide smooth form surfaces, free from irregularities, dents, sags, or holes when used for permanently exposed faces. Chamfer all exposed joints and edges , unless otherwise indicated.

3.1.3 Production of Concrete

3.1.3.1 Ready-Mixed Concrete

Provide ready-mixed concrete conforming to ASTM C94/C94M except as otherwise specified.

3.1.3.2 Concrete Made by Volumetric Batching and Continuous Mixing

Conform to ASTM C685/C685M.

3.1.3.3 Batching and Mixing Equipment

The option of using an on-site batching and mixing facility is available. The facility must provide sufficient batching and mixing equipment capacity to prevent cold joints. Submit the method of measuring materials, batching operation, and mixer for review, and manufacturer's data for batching and mixing equipment demonstrating compliance with the applicable specifications.

3.1.4 Waterstops

Install and splice waterstops as directed by the manufacturer.

3.2 CONVEYING AND PLACING CONCRETE

Convey and place concrete in accordance with ACI 301, Section 5.

3.2.1 Cold-Weather Requirements

Place concrete in cold weather in accordance with ACI 306R

3.2.2 Hot-Weather Requirements

Place concrete in hot weather in accordance with ACI 305R

3.3 FINISHING

3.3.1 Temperature Requirement

Do not finish or repair concrete when either the concrete or the ambient temperature is below 50 degrees F.

3.3.2 Expansion and Contraction Joints

Make expansion and contraction joints in accordance with the details shown or as otherwise specified.

3.4 CURING AND PROTECTION

Cure and protect in accordance with ACI 301, Section 5.

3.5 FORM WORK

Provide form work in accordance with ACI 301, Section 2 and Section 5.

3.5.1 Removal of Forms

Remove forms in accordance with ACI 301, Section 2.

3.6 STEEL REINFORCING

Reinforcement must be free from loose, flaky rust and scale, and free from oil, grease, or other coating which might destroy or reduce the reinforcement's bond with the concrete.

3.6.1 Fabrication

Shop fabricate steel reinforcement in accordance with ACI 318 and ACI SP-66. Provide shop details and bending in accordance with ACI 318 and ACI SP-66.

3.6.2 Splicing

Perform splices in accordance with ACI 318 and ACI SP-66.

3.6.3 Supports

Secure reinforcement in place by the use of metal or concrete supports, spacers, or ties.

3.7 EMBEDDED ITEMS

Before placing concrete, take care to determine that all embedded items are firmly and securely fastened in place. Provide embedded items free of oil and other foreign matter, such as loose coatings of rust, paint and scale. Embedding of wood in concrete is permitted only when specifically authorized or directed.

3.8 TESTING AND INSPECTING

Report the results of all tests and inspections conducted at the project site informally at the end of each shift. Submit written reports weekly. Deliver within three days after the end of each weekly reporting period.

3.8.1 Field Testing Technicians

The individuals who sample and test concrete must have demonstrated a knowledge and ability to perform the necessary test procedures equivalent to the ACI minimum guidelines for certification of Concrete Field Testing Technicians, Grade I.

3.8.2 Preparations for Placing

Inspect foundation or construction joints, forms, and embedded items in sufficient time prior to each concrete placement to certify that it is ready to receive concrete.

3.8.3 Sampling and Testing

a. Obtain samples and test concrete for quality control during placement. Sample fresh concrete for testing in accordance with ASTM C172/C172M. Make six test cylinders.

b. Test concrete for compressive strength at 7 and 28 days for each design mix and for every 100 cubic yards of concrete. Test two cylinders at 7 days; two cylinders at 28 days; and hold two cylinders in reserve. Conform test specimens to ASTM C31/C31M. Perform compressive strength testing conforming to ASTM C39/C39M.

c. Test slump at the site for each design mix in accordance with ASTM C143/C143M.

d. Test air content for air-entrained concrete in accordance with ASTM C231/C231M. Test concrete using lightweight or extremely porous aggregates in accordance with ASTM C173/C173M. Check air content during each shift that concrete is placed.

e. Determine temperature of concrete at time of placement in accordance with ASTM C1064/C1064M.

3.8.4 Action Required

3.8.4.1 Placing

Do not begin placement until the availability of an adequate number of acceptable vibrators, which are in working order and have competent operators, has been verified. Discontinue placing if any lift is inadequately consolidated.

3.8.4.2 Air Content

Whenever an air content test result is outside the specification limits, adjust the dosage of the air-entrainment admixture prior to delivery of concrete to forms.

3.8.4.3 Slump

Whenever a slump test result is outside the specification limits, adjust the batch weights of water and fine aggregate prior to delivery of concrete to the forms. Make the adjustments so that the water-cementitious material ratio does not exceed that specified in the submitted concrete mixture proportion and the required concrete strength is still met.

-- End of Section --

SECTION 05 30 00.01

MOORING HARDWARE

PART 1 GENERAL

This specification consists of supply and installation of the cast steel cleat as shown on the drawings. Installation includes bolting of mooring hardware, grouting of base, filling hardware with grout and filling of bolt holes.

1.1 REFERENCES

The publications listed below form a part of this specification to the extent referenced. The publications are referred to within the text by the basic designation only.

SOCIETY FOR PROTECTIVE COATINGS (SSPC)

SSPC SP 6/NACE No.3	(2007) Commercial Blast Cleaning

ASTM INTERNATIONAL (ASTM)

ASTM A27/A27M	(2020) Standard Specification for Steel Castings, Carbon, for General Application
ASTM A123/A123M	(2017) Standard Specification for Zinc (Hot-Dip Galvanized) Coatings on Iron and Steel Products
ASTM A36/A36M	(2019) Standard Specification for Carbon Structural Steel
ASTM A563M	(2007; R 2013) Standard Specification for Carbon and Alloy Steel Nuts (Metric)
ASTM C1107/C1107M	(2020) Standard Specification for Packaged Dry, Hydraulic-Cement Grout (Nonshrink)
ASTM C920	(2018) Standard Specification for Elastomeric Joint Sealants
ASTM F436	(2011) Hardened Steel Washers

1.2 SUBMITTALS

Government approval is required for submittals with a "G" designation; submittals not having a "G" designation are for Contractor Quality Control approval. When used, a designation following the "G" designation identifies the office that will review the submittal for the Government. Submit the following in accordance with Section 01 33 00 SUBMITTAL PROCEDURES:

SD-02 Shop Drawings

Bollards; G

SD-03 Product Data

Cleats; G

Threaded Rods; G

Plates; G

Nuts and Washers; G

Grout; G

Elastomeric Sealants; G

Coating System Data Sheets; G

SD-05 Design Data

Design Calculations; G

Detailed design calculations demonstrating proposed mooring hardware meets the loading requirements with the required factor of safety of Section 2.1.1. Calculations must be stamped by a registered Professional Engineer.

SD-07 Certificates

Bollards; G

Threaded Rods; G

Plates; G

Nuts and Washers; G

Grout; G

Elastomeric Sealants; G

PART 2 PRODUCTS

2.1 MOORING FITTINGS

2.1.1 Bollards

Bollards shall be new cast steel as shown on the drawings. Bollard material shall be stress-relieved cast steel conforming to ASTM A27/A27M, Grade 65-35. Bollards shall have a minimum working capacity of 30 tons in the direction of 0 degrees to 30 degrees relative to horizontal and 0 degrees to 180 degrees relative to the face of the pier. The factor of safety against yielding shall be 2.0 and the factor of safety against breaking shall be 3.0. Submit detailed design calculations for the bollard showing conformance to the above performance criteria. Bollards shall have a tip to tip horn dimension of approximately 16 inches.

2.1.2 Anchorage Hardware

The proposed mooring hardware shall be anchored to the pier utilizing ASTM A490 galvanized anchor bolts, as recommended by the manufacturer or shown on the drawings. Nuts shall conform to ASTM A563M, hardened washers

shall conform to ASTM F436 and plates shall conform to ASTM A36/A36M. Plates, nuts and washers and threaded rods shall be hot dipped galvanized according to ASTM A123/A123M.

2.1.3 Grout

Grout for annulus of mooring hardware and bedding shall be non-shrink, non-metallic high performance cementitious grout having a minimum 28 day compressive strength of 7500 psi. Grout shall conform to ASTM C1107/C1107M, Grade C.

2.1.4 Elastomeric Sealants

ASTM C920, Type S, one component, Grade P pourable or self-leveling type sealant.

2.1.5 Finish

Mooring Hardware shall be cleaned of any grease or other foreign matter with suitable degreaser and any corrosion and loose material shall be removed to SSPC SP 6/NACE No.3 Commercial Blast Cleaning before applying coating system. Mooring hardware shall be finished with a 3-coat paint system, paint shall be black.

Submit Coating System Data Sheets. Products that are considered meeting these requirements include, but are not limited to the following products:

Carboline Protective Coating
Primer, 2.0 to 3.0 mils D.F.T. Carbozinc 11 Inorganic Zinc
Intermediate Coat, 3.0 mils D.F.T. Carboguard
Top Coat, 2.0-2.5 mils D.F.T. Carbothane 134 HG Aliphatic Acrylic Polyurethane

Devoe High Performance Coatings
Primer - Cath-coat 302H
Intermediate Coat - Bar-Rust 231
Top Coat - Devthane 379

PART 3 EXECUTION

3.1 MOORING HARDWARE INSTALLATION

3.1.1 Threaded Rods

Threaded rod and/or bolts shall be held in place with templates that match the mooring hardware bolt pattern.

3.1.2 Mooring Hardware

Place mooring hardware as shown and install bolts. Fully grout the annulus around and under the mooring hardware. Nuts shall be hand tightened before grouting of base. After grout has cured for seven days, nuts shall be torqued to 5,000 in-lbs. Seal bolt pockets with elastomeric sealant after tightening.

-- End of Section --

SECTION 05 50 13

MISCELLANEOUS METAL FABRICATIONS

PART 1 GENERAL

1.1 REFERENCES

The publications listed below form a part of this specification to the extent referenced. The publications are referred to within the text by the basic designation only.

AMERICAN INSTITUTE OF STEEL CONSTRUCTION (AISC)

AISC 303	(2016) Code of Standard Practice for Steel Buildings and Bridges

AMERICAN SOCIETY OF MECHANICAL ENGINEERS (ASME)

ASME B18.2.1	(2012; Errata 2013) Square and Hex Bolts and Screws (Inch Series)
ASME B18.21.1	(2009; R 2016) Washers: Helical Spring-Lock, Tooth Lock, and Plain Washers (Inch Series)
ASME B18.6.2	(2020) Square Head Set Screws and Slotted Headless Set Screws (Inch Series)
ASME B18.6.3	(2013; R 2017) Machine Screws, Tapping Screws, and Machine Drive Screws (Inch Series)

ASTM INTERNATIONAL (ASTM)

ASTM A123/A123M	(2017) Standard Specification for Zinc (Hot-Dip Galvanized) Coatings on Iron and Steel Products
ASTM A153/A153M	(2016a) Standard Specification for Zinc Coating (Hot-Dip) on Iron and Steel Hardware
ASTM A193/A193M	(2020) Standard Specification for Alloy-Steel and Stainless Steel Bolting Materials for High-Temperature Service and Other Special Purpose Applications
ASTM A36/A36M	(2019) Standard Specification for Carbon Structural Steel
ASTM A307 HDG	(2014; E 2017) Standard Specification for Carbon Steel Bolts, Studs, and Threaded Rod 60 000 PSI Tensile Strength
ASTM A500/A500M	(2021) Standard Specification for Cold-Formed Welded and Seamless Carbon

	Steel Structural Tubing in Rounds and Shapes
ASTM A653/A653M	(2020) Standard Specification for Steel Sheet, Zinc-Coated (Galvanized) or Zinc-Iron Alloy-Coated (Galvannealed) by the Hot-Dip Process
ASTM A924/A924M	(2020) Standard Specification for General Requirements for Steel Sheet, Metallic-Coated by the Hot-Dip Process
ASTM A992/A992M	(2020) Standard Specification for Structural Steel Shapes
ASTM C1513	(2018) Standard Specification for Steel Tapping Screws for Cold-Formed Steel Framing Connections

1.2 SUBMITTALS

Government approval is required for submittals with a "G" designation; submittals not having a "G" designation are for Contractor Quality Control approval. Submit the following in accordance with Section 01 33 00 SUBMITTAL PROCEDURES:

SD-02 Shop Drawings

Fabrication drawings of structural steel; G

Submit fabrication drawings showing layout(s), connections to structural system, and anchoring details as specified in AISC 303.

Submit templates, erection and installation drawings indicating thickness, type, grade, class of metal, and dimensions. Show construction details, reinforcement, anchorage, and installation with relation to the pier construction.

Including but not limited to:

- Sea cushion padeye connections to existing deck edge beam..
- Shear plate connections to existing sides of cap beams and underside of deck.
- Fixed and collapsible single post traffic bollards.

1.3 DELIVERY, STORAGE, AND PROTECTION

Protect from corrosion, deformation, and other types of damage. Store items in an enclosed area free from contact with soil and weather. Remove and replace damaged items with new items.

PART 2 PRODUCTS

2.1 MATERIALS

2.1.1 Structural Carbon Steel

Steel grades for fabrication shall be:
MISCELLANEOUS CHANNELS: ASTM A36/A36M

W SECTIONS: ASTM A992/A992M
PLATES: ASTM A36/A36M
ANGLE SECTIONS: ASTM A992/A992M
WT SECTIONS: ASTM A992/A992M
STEEL BAR: ASTM A36/A36M
TUBE SECTIONS INCLUDING TRAFFIC BOLLARDS: ASTM A500/A500M GRADE B, FY=46 KSI.

2.1.2 Anchor Bolts

ASTM A307 HDG, unless noted on drawings. Where exposed, shall be of the same material, color, and finish as the metal to which applied.

Post-installed concrete anchors for padeyes or anchor rods, ASTM A193/A193M Grade B7.

2.1.2.1 Lag Screws and Bolts

ASME B18.2.1, type and grade best suited for the purpose.

2.1.2.2 Bolts, Nuts, Studs, Pins, and Rivets

ASTM A307 HDG
Bollard Pins: 18-8 Stainless Steal

2.1.2.3 Screws

ASME B18.2.1, ASME B18.6.2, ASME B18.6.3 and ASTM C1513.

2.1.2.4 Washers

Provide plain washers to conform to ASME B18.21.1. Provide beveled washers for American Standard beams and channels, square or rectangular, tapered in thickness, and smooth. Provide lock washers to conform to ASME B18.21.1. See appropriate specification for marine fender and marine piles.

2.2 FABRICATION FINISHES

2.2.1 Galvanizing

Hot-dip galvanize items specified to be zinc-coated, after fabrication where practicable. Galvanizing: ASTM A123/A123M, ASTM A153/A153M, ASTM A653/A653M or ASTM A924/A924M, G90, as applicable.

2.2.2 Galvanize

All metals including but not limited to: anchor bolts, grating fasteners, washers, and parts or devices necessary for proper installation, unless indicated otherwise.

2.2.3 Traffic Bollards

All surfaces shall be primed with rust and corrosion resistant zinc rich primer W/5000 hour salt spray performance.

2.2.3.1 Standard Finish, TGIC Polyestor outdoor finish RAL1028 Yellow

TGIC Polyestor powder shall meet decorative and fuctional requirements

for gloss retention, phyical properties, chemical resistance and weatherability.

PART 3 EXECUTION

3.1 GENERAL INSTALLATION REQUIREMENTS

Install items at locations indicated, according to manufacturer's instructions. Verify all measurements and take all field measurements necessary before fabrication. Include materials and parts necessary to complete each item, even though such work is not definitely shown or specified. Poor matching of holes for fasteners shall be cause for rejection. Conceal fastenings where practicable. Thickness of metal and details of assembly and supports shall provide strength and stiffness. Form joints exposed to the weather shall be formed to exclude water. Items listed below require additional procedures.

3.2 WORKMANSHIP

Provide miscellaneous metalwork that is well formed to shape and size, with sharp lines and angles and true curves. Drilling and punching shall produce clean true lines and surfaces. Provide continuous welding along the entire area of contact except where tack welding is permitted. Do not tack weld exposed connections of work in place and ground smooth. Provide a smooth finish on exposed surfaces of work in place and unless otherwise approved, flush exposed riveting. Mill joints where tight fits are required. Corner joints shall be coped or mitered, well formed, and in true alignment. Accurately set work to established lines and elevations and securely fastened in place. Install in accordance with manufacturer's installation instructions and approved drawings, cuts, and details.

3.3 ANCHORAGE, FASTENINGS, AND CONNECTIONS

Provide anchorage where necessary for fastening miscellaneous metal items securely in place. Include for anchorage not otherwise specified or indicated through bolts, lag bolts, and screws for wood. Do not use wood plugs in any material.

-- End of Section --

SECTION 06 13 33

PIER TIMBERWORK

PART 1 GENERAL

1.1 REFERENCES

The publications listed below form a part of this specification to the extent referenced. The publications are referred to within the text by the basic designation only.

AMERICAN WOOD PROTECTION ASSOCIATION (AWPA)

AWPA C2	(2003) Lumber, Timber, Bridge Ties and Mine Ties - Preservative Treatment by Pressure Processes
AWPA M4	(2015) Standard for the Care of Preservative-Treated Wood Products
AWPA M6	(2013) Brands Used on Preservative Treated Materials

ASTM INTERNATIONAL (ASTM)

ASTM A123/A123M	(2017) Standard Specification for Zinc (Hot-Dip Galvanized) Coatings on Iron and Steel Products
ASTM A153/A153M	(2016a) Standard Specification for Zinc Coating (Hot-Dip) on Iron and Steel Hardware
ASTM A354	(2017; E 2017; E 2018) Standard Specification for Quenched and Tempered Alloy Steel Bolts, Studs, and Other Externally Threaded Fasteners
ASTM A563	(2015) Standard Specification for Carbon and Alloy Steel Nuts
ASTM F436	(2011) Hardened Steel Washers

U.S. DEPARTMENT OF DEFENSE (DOD)

MIL-P-21035	(1991; Rev B; Notice 2 2003; Notice 3 2021) Paint, High Zinc Dust Content, Galvanizing Repair (Metric)

1.2 SUBMITTALS

Government approval is required for submittals with a "G" designation; submittals not having a "G" designation are for Contractor Quality Control approval. Submit the following in accordance with Section 01 33 00 SUBMITTAL PROCEDURES:

SD-02 Shop Drawings

Pier timberwork; G

Submit drawings of treated timber showing dimensions of cut, framed, or bored timbers.

SD-06 Test Reports

Timber preservative inspection; G

Delivery inspection list; G

SD-07 Certificates

MSDS and CIS; G

1.3 DELIVERY AND STORAGE

Close-stack treated timber and lumber material in a manner that will prevent long timbers or preframed material from sagging or becoming crooked. Keep ground under and within 5 feet of such piles free of weeds, rubbish, and combustible materials. Protect materials from weather. Handle treated timber with ropes or chain slings without dropping, breaking outer fibers, bruising, or penetrating surface with tools. Do not use cant dogs, peaveys, hooks, or pike poles. Protect timber and hardware from damage.

1.4 QUALITY ASSURANCE

1.4.1 MSDS and CIS

Provide Material Safety Data Sheets (MSDS) and Consumer Information Sheets (CIS) associated with timber pile preservative treatment. Contractor shall comply with all safety precautions indicated on MSDS and CIS.

1.4.2 Timber Preservative Inspection

Submit the inspection report of an independent inspection agency, for approval by the Contracting Officer, that offered products complying with applicable AWPA Standards. Identify treatment on each piece by the quality mark of an agency accredited by the Board of Review of the American Lumber Standard Committee.

1.4.3 Delivery Inspection List

Field inspect and submit a verification list of each treated timber member and each strapped bundle of treated lumber indicating the wording and lettering of the quality control markings, the species and the condition of the wood. Do not incorporate materials damaged in transport from plant to site. Inspect all preservative-treated wood, visually to ensure there are no excessive residual materials or preservative deposits. Material shall be clean and dry or it will be rejected due to environmental concerns.

PART 2 PRODUCTS

2.1 MATERIALS

2.1.1 Lumber and Timbers

2.1.1.1 Solid Sawn

Provide solid sawn lumber and timbers of stress-rated Southern Pine or Douglas Fir-Larch, with a stress rating as indicated, and identified by the grade mark of a recognized association or independent inspection agency using the specific grading requirements of an association recognized as covering the species used. The association or independent inspection agency shall be certified by the Board of Review, American Lumber Standards Committee, to grade the species used. Use commercial grade lumber for secondary members such as decking, joists and railings.

2.1.1.2 Preservative Treatment

Fabricate lumber and timbers before preservative treatment. Each piece of treated lumber or timber shall be branded, by the producer, in accordance with AWPA M6. Treat wood to be used in contact with salt water or salt water splash in accordance with AWPA C2 (Material Subject to Marine Borer Exposure) with water-borne preservative. The Contractor shall be responsible for the quality of treated wood products.

2.1.2 Hardware

Bolts with necessary nuts and washers, timber connectors, drift pins, dowels, nails, screws, spikes, and other fastenings. Bolts and nuts shall conform to ASTM A325 HDG. Provide cast-iron ogee, malleable iron washers, or plate or cut washers where indicated. Provide bolts with washers under nut and head. Provide timber connectors and other metal fastenings of type and size shown. Hot-dip galvanize hardware. Threaded rods shall be ASTM A354, Grade B5. Nuts shall be ASTM A563, Grade A heavy hex. Washers shall be ASTM F436.

2.1.2.1 Zinc-Coating

Galvanize steel specified or indicated by the hot-dip process in accordance with ASTM A123/A123M or ASTM A153/A153M, as applicable.

PART 3 EXECUTION

3.1 CONSTRUCTION

In addition to the contract clause entitled "Accident Prevention" provide protective equipment for personnel fabricating, field treating, or handling materials treated with water-borne salts. Refer to paragraph entitled "MSDS and CIS."

3.1.1 Fastening

Vertical bolts shall have nuts on the lower end. Where bolts are used to fasten timber to timber, timber to concrete, or timber to steel, bolt members together when they are installed and retighten immediately prior to final acceptance of contract. Provide bolts having sufficient additional threading to provide at least 3/8 inch per foot thickness of timber for future retightening. Provide timber connectors of types

indicated.

3.2 FIELD TREATMENT

3.2.1 Timberwork

Field treat cuts, bevels, notches, refacing and abrasions made in the field in treated piles or timbers in accordance with AWPA M4, MSDS and CIS. Wood preservatives are restricted use pesticides and shall be applied according to applicable standards. Trim cuts and abrasions before field treatment. Paint depressions or openings around bolt holes, joints, or gaps including recesses formed by counterboring, with preservative treatment used for piles or timber; and after bolt or screw is in place, fill with hot pitch or a bitumastic compound.

3.2.2 Piling and Post Protection

In accordance with AWPA M4, immediately after pile or post tops are cut off and prior to placement of pile cap, protect pile or post top with several heavy applications of the same preservative used to treat the pile or post, or else copper naphthenate solutions containing a minimum of 2 percent copper metal may be used with treated products. Seal ends with a heavy application of coal-tar pitch or other appropriate sealer.

3.2.3 Galvanized Surfaces

Repair and recoat zinc coating which has been field or shop cut, burned by welding, abraded, or otherwise damaged to such an extent as to expose the base metal. Thoroughly clean the damaged area by wire brushing and remove traces of welding flux and loose or cracked zinc coating prior to painting. Paint cleaned area with two coats of zinc oxide-zinc dust paint conforming to MIL-P-21035. Compound paint with a suitable vehicle in a ratio of one part zinc oxide to four parts zinc dust by weight.

-- End of Section --

SECTION 26 05 33

DOCKSIDE POWER CONNECTION STATIONS

PART 1 GENERAL

1.1 REFERENCES

The publications listed below form a part of this specification to the extent referenced. The publications are referred to within the text by the basic designation only.

INSTITUTE OF ELECTRICAL AND ELECTRONICS ENGINEERS (IEEE)

IEEE 100	(2000; Archived) The Authoritative Dictionary of IEEE Standards Terms
IEEE C2	(2023) National Electrical Safety Code

NATIONAL FIRE PROTECTION ASSOCIATION (NFPA)

NFPA 70	(2023) National Electrical Code

1.2 DEFINITIONS

Unless otherwise specified or indicated, electrical and electronics terms used in these specifications, and on the drawings, shall be as defined in IEEE 100.

1.3 SUBMITTALS

Government approval is required for submittals with a "G" or "S" classification. Submittals not having a "G" or "S" classification are for information only. When used, a code following the "G" classification identifies the office that will review the submittal for the Government. Submit the following in accordance with Section 01 33 00 SUBMITTAL PROCEDURES:

SD-02 Shop Drawings

Shore-Tie Station ; G

Include wiring diagrams and installation details of equipment indicating layout and arrangement, control panels, accessories, and other items that must be shown to ensure a coordinated installation. Wiring diagrams shall identify circuit terminals and indicate the internal wiring for each item of equipment and the interconnection between each item of equipment. Drawings shall indicate adequate clearance for operation, maintenance, and replacement of operating equipment devices. Submittals shall include the nameplate data, size, and capacity. Submittals shall also include applicable federal, military, industry, and technical society publication references.

SD-03 Product Data

Electrical Shore Tie Power and Mound Enclosure; G

Power Receptacle w/ Interlock module; G

Time Delay Relay; G

Phase Loss Relay; G

Communications Receptacle; G

Circuit Breaker Assembly; G

Isolation Transformer; G

Cabling; G

Raceway; G

Line Insulation Monitor; G

Surge Protection Device; G

SD-06 Test Reports

Power Receptacle and Plug Assembly Tests; G

Acceptance Checks and Tests; G

SD-10 Operation and Maintenance Data

Shore Tie Station; G

1.4 QUALITY ASSURANCE

1.4.1 Drawings

Furnish drawings that include, but are not limited to, the following:

a. One-line diagram including breakers, fuses, current transformers, and meters.

b. Outline drawings including front elevation, section views, footprint, and overall dimensions.

c. Markings and NEMA nameplate data, including fuse information (manufacturer's name, catalog number, and ratings).

d. Circuit breaker type, interrupting rating, and trip devices, including available settings.

e. Three-line diagrams and elementary diagrams and wiring diagrams with terminals identified, and indicating prewired interconnections between items of equipment and the interconnection between the items.

f. Manufacturer's instruction manuals and published time-current curves (on full size logarithmic paper) of the main secondary breaker and largest secondary feeder device. These shall be used by the designer of record to provide breaker settings that will insure protection and coordination are achieved.

1.4.2 Regulatory Requirements

In each of the publications referred to herein, consider the advisory provisions to be mandatory, as though the word, "shall" had been substituted for "should" wherever it appears. Interpret references in these publications to the "authority having jurisdiction," or words of similar meaning, to mean the Contracting Officer. Equipment, materials, installation, and workmanship shall be in accordance with the mandatory and advisory provisions of NFPA 70 unless more stringent requirements are specified or indicated.

1.4.3 Standard Products

Provide materials and equipment that are products of manufacturers regularly engaged in the production of such products which are of equal material, design and workmanship. Products shall have been in satisfactory commercial or industrial use for 2 years prior to bid opening. The 2-year period shall include applications of equipment and materials under similar circumstances and of similar size. The product shall have been on sale on the commercial market through advertisements, manufacturers' catalogs, or brochures during the 2-year period. Where two or more items of the same class of equipment are required, these items shall be products of a single manufacturer and the component parts of the item shall be the products of the same manufacturer.

1.4.3.1 Alternative Qualifications

Products having less than a 2-year field service record will be acceptable if a certified record of satisfactory field operation for not less than 6000 hours, exclusive of the manufacturers' factory or laboratory tests, is furnished.

1.4.3.2 Material and Equipment Manufacturing Date

Products manufactured more than 3 years prior to date of delivery to site shall not be used, unless specified otherwise.

1.5 WARRANTY

The equipment items shall be supported by service organizations which are reasonably convenient to the equipment installation in order to render satisfactory service to the equipment on a regular and emergency basis during the warranty period of the contract.

1.6 MAINTENANCE

1.6.1 Operation and Maintenance Data

Submit Operation and Maintenance Manuals in accordance with Section 01 78 23 OPERATION AND MAINTENANCE DATA.

1.7 DESIGN-BUILD CONCRETE EQUIPMENT PADS

1.7.1 CONCRETE EQUIPMENT PADSCurrently there are no equipment pads for the new pad mounted transformer or shore-tie power mound; both located on a concrete pier. Contractor shall submit for approval a concrete equipment pad detail for the transformer and power mound; taking into consideration for the transformer and power mound; taking into consideration surrounding

obstructions. Contractor shall perform the following:

(1) Obtain manufacturer cut sheets on each piece of equipment detailing the equipment's physical dimensions.

(2) Perform a detailed site visit and obtain:

(a) Required measurements to carefully coordinate the location of the pad relative to new equipment and any surrounding obstructions.

(b) Coordinate existing and future conduit installation to assure new conduit enter the equipment thru the pad beneath the new equipment's wire access.

(c) Identify proposed coring of holes with the pier structure to avoid conflicts with reinforcing bars as much as possible.

(3) Dimensions new concrete foundations to meet the length x width dimensions of the equipment, PLUS/ADD three (3) inches to each dimension. The height of the new pad shall be 3-inches above the deck.

(4) ½" chamfer all edges.

(5) 3/8" diameter reinforcing bar studs shall be installed at 12" o.c. each way. Use 4" long, 2" into deck.

(6) Submit a sketch for approval on a minimum 8-1/2" X 11" sheet detailing each new concrete pad. Provide one sheet per foundation. Show dimensions, meshing, and a detail on how you propose to properly adhere the new foundation to the concrete deck.

(7) Concrete shall be 3000 psi strength.

PART 2 PRODUCTS

2.1 SHORE TIE STATION

Ship service and industrial service power connection station assemblies shall include enclosure with all associated access panels and mounting hardware, power and communications receptacles, control and indication circuit breakers, instrumentation transformers, auxiliary devices, metering accessories, and related wiring. Each power connection station shall have the number of circuits indicated and each circuit shall provide three-phase, three-wire service.

2.1.1 Shore Tie Enclosure

Enclosure shall be UL 50 listed, type NEMA 3RX, fabricated entirely of ASTM A167 type 316 or 316L stainless steel. All interior and exterior covers and doors shall be minimum 12 gauge stainless steel sheets. Unit shall have fixed top and open bottom. Side covers shall be bolt-on and removable. Rear covers shall be hinged. Optional doors shall have full height continuous hinge and door stop to allow door to be secured open at 90 degrees. Ventilating or similar openings in equipment shall be designed so that foreign objects inserted through these openings are deflected from energized parts. Paint enclosure ASTM D1535 Coast Guard White. Paint coating system shall comply with IEEE C57.12.28.

2.1.2 Power Receptacle

Rated for 600 VAC, amperage as indicated on Drawings, 60 hertz, three-pole, continuous duty operation. Receptacle assembly with factory potted cable pigtails and interlock shall be provided and shipped to the Contractor by the government and at no cost to the Contractor. Cable pigtails shall be a minimum of 4 feet in length and 3-1/c Type THOF-400 cables. Contractor shall assure the Government Furnished receptacle with provisions for interlocking the receptacle is installed and coordinated with its respective feeder circuit breaker so that breaker will trip automatically if an attempt is made to remove the plug from the receptacle and when the receptacle cover is opened. Government Furnished Receptacle shall be as follows based on the style cutter intended to serve:

295' WIX: MIL-C-24368/2, 400A

2.1.3 600 V Power Receptacle

Communications receptacle shall be a Russellstoll model SKWR12XG and are Government Furnished Equipment. Contractor shall install in a Contractor provided NEMA 4X enclosure for wiring termination and mounting to shore tie enclosure. Refer to Drawing Sheet TD101, TS101, and Specification Section 33 82 00 TELECOMMUNICATIONS.

2.1.4 Communications Receptacle

Communications receptacle shall be a Russellstoll model SKWR12XG and are Government Furnished Equipment. Contractor shall install in a Contractor provided NEMA 4X enclosure for wiring termination and mounting to shore tie enclosure. Refer to Drawings and Specification Section 27 10 00 BUILDING TELECOMMUNICATIONS CABLING SYSTEM.

2.1.5 Circuit Breaker Assembly

Refer to Drawings. Circuit breaker assembly for shore tie receptacles shall include the following characteristics and meet the operational intention listed herein.

Each shore tie breaker assembly shall be housed in one enclosure to include motor-operated circuit breaker with associated electronic control unit; phase loss relay; insulation resistance monitor; and surge protection device.

Breaker position shall be controlled manually via external pushbutton operators. Additionally, breaker shall trip upon phase-loss detection, and shall be interlocked with shore tie receptacle cover to prevent energizing exposed parts when cover is opened.

2.1.5.1 Enclosure

Assembly enclosure shall be NEMA 4X rated, type 316/316L stainless steel, hinged and gasketed cover, bolted fasteners, and epoxy-coated seams for complete weather integrity. Conduit stuffing tubes shall be NEMA 6P. Coordinate enclosure dimensions and mounting location with internal components and shore tie station fabrication.

2.1.5.2 Circuit Breaker

UL 489. Molded case circuit breaker, 400-amp frame with adjustable thermal

magnetic overcurrent trip and auxiliary shunt trip; 100 percent rated, non-fused, current limiting, 3-pole, and 200 KAic short circuit current interrupting rating. Electronic control unit shall have 120-volt control operation with inputs and outputs as noted herein and on Drawings.

2.1.5.3 Circuit Breaker Control & Indication

Provide momentary contact pushbuttons for each "OPEN" and "CLOSE" breaker position operation. Provide associated LED indication lights for breaker positioning: green in color for "OPEN" and red in color for "CLOSED". Pushbuttons and indication lights shall be 120-volt operation, weatherproof, and form a separate device assembly operated from the exterior of the shore tie enclosure.

2.1.5.4 Phase Loss Relay

Solid state device rated to monitor 480-volt, 3-phase systems. Undervoltage adjustable from 75%-100%. Output contacts for circuit breaker control and LED indication.

2.1.6 Line Insulation Monitor

Basis of Design: Bender IRDH375 for monitoring 3-phase ungrounded AC systems. Provide with all associated meters, operational pushbuttons, amber warning light, red alarm light, and audible alarm horn. Monitor shall automatically disconnect from the system when a cutter is connected to the shore-tie receptacle to prevent simultaneous operation with shipboard monitor system.

a. Warning (amber strobe): insulation resistance leakage current exceeds 13 kilo-ohm or 35 mA. This alarm is visual only.

b. Alarm (red strobe and horn): insulation resistance leakage current exceeds 9 kilo-ohm or 50mA. Mount adjacent to the warning strobe. Provide horn with "silence" pushbutton.

2.1.6.1 Surge Protection Device

Externally mounted unit rated for 480-volt, 3-phase AC systems. Provide for 320kA surge current with 200kA short circuit protection. Include output contacts for LED indication.

2.1.6.2 Transformers

White epoxy-coated stainless steel NEMA 4X rated for marine duty, dry-type, 115-degree C epoxy encapsulated. Equipped with copper windings with 220-degree C insulation and 150-degree C average temperature rise at full load in a 40-degree C environment. Voltage adjusting taps on the primary shall be capable of supporting a range adjustment for (2) at 2.5% above normal (FCAN) and four (4) at 2.5% below normal (FCBN). Taps shall be adjusted to deliver the required nominal voltage at the dockside receptacle when tested at 50% of the rated load. Dual electrostatic shields shall be installed between the primary and secondary windings, as well as between the windings and the core. All shields shall be joined together and bonded to earth ground.

2.1.6.3 Isolation Transformer

480-volt, 3-phase, delta primary; ungrounded 450-volt, 3-phase, delta

secondary. Refer to Drawings for kVA ratings. Tap transformer secondary such that 450-volts AC, 3-phase is observed at associated power receptacle.

2.1.7 Enclosure Configurations

a. Enclosures for ship service stations shall be configured as indicated. Receptacles of the same type shall be mounted on a common plate. Each plate shall have handles on both ends and shall be bolted to the front cover so that it can be removed from the front without disconnecting the cables. Each section shall include a full width ground bus. Each section shall have a hinged pad lockable door. Provide nameplates to identify each with circuit number and/or purpose.

2.2 MANUFACTURER'S NAMEPLATE

Each item of equipment shall have a nameplate bearing the manufacturer's name, address, model number, and serial number securely affixed in a conspicuous place; the nameplate of the distributing agent will not be acceptable.

2.3 MANUFACTURER'S NAMEPLATE

2.3.1 FIELD FABRICATED NAMEPLATES

ASTM D709. Provide laminated plastic nameplates for each equipment enclosure, relay, switch, and device; as specified or as indicated on the drawings. Each nameplate inscription shall identify the function and, when applicable, the position. Nameplates shall be melamine plastic, 0.125 inch thick, white with black center core. Surface shall be matte finish. Corners shall be square. Accurately align lettering and engrave into the core. Minimum size of nameplates shall be one by 2.5 inches. Lettering shall be a minimum of 0.25 inch high normal block style.

2.4 WARNING SIGNS

a. When the enclosure integrity of such equipment is specified to be in accordance with IEEE C57.12.28, provide self-adhesive warning signs on the outside of the high voltage compartment door(s). Sign shall be a decal and shall have nominal dimensions of 7 by 10 inches with the legend "DANGER HIGH VOLTAGE" printed in two lines of nominal 2 inch high letters. The world "DANGER" shall be in white letters on a red background and the words "HIGH VOLTAGE" shall be in black letters on a white background. Decal shall be Panduit No. PPSO710D72 or approved equal.
b. Provide warning sign indicating shore-tie enclosure is supplied ungrounded power (Delta).
c. Provide arc flash warning labels in accordance with NFPA 70E.

2.5 SOURCE QUALITY CONTROL

2.5.1 Power Receptacle and Plug Assembly Tests

Conduct design, production, and quality assurance tests, as required by MIL-C-24368/1 and MIL-C-24368/2, at the manufacturer's plant during fabrication and assembly of power receptacle and plug assemblies. After completion of tests, inspect assemblies. There shall be no evidence of damage to the receptacle or plug assembly. Assemblies shall be satisfactory for immediate return to service at full ratings without maintenance or repair. Contracting Officer or his designated

representative will witness the tests.

2.6 WIRING METHODS

2.6.1 Conductors

All conductor material shall be copper. Minimum conductor size shall be #12 AWG.

2.6.1.1 Cabling

Shore tie feeder cabling shall be multi-conductor Type TC-ER cable with XHHW-2 insulation and CPE jacket.

2.6.2 Raceway

Note that "raceway" shall refer to a complete system consisting of straight lengths of conduit, fittings, couplings and pull/junction boxes.

2.6.2.1 Exterior Raceway

Exterior raceway shall be epoxy fiberglass, Type RTRC (reinforced thermosetting resin conduit), minimum 1/4" wall thickness, and minimum 1" trade size.

PART 3 EXECUTION

3.1 INSTALLATION

Electrical installations shall conform to IEEE C2, NFPA 70, and to the requirements specified herein.

3.2 POWER CONNECTION STATION GROUNDING

Ground in accordance with NFPA 70. Maximum resistance from assembly to ground shall be 3 ohms.

3.3 FIELD FABRICATED NAMEPLATE MOUNTING

Provide number, location, and letter designation of nameplates as indicated. Fasten nameplates to the device with a minimum of two sheet-metal screws or two rivets.

3.4 WARNING SIGN MOUNTING

Provide the number of signs required to be readable from each accessible side, but space the signs a maximum of 30 feet apart.

3.5 FIELD QUALITY CONTROL

3.5.1 Performance of Acceptance Checks and Tests

Perform in accordance with the manufacturer's recommendations and include the following visual and mechanical inspections and electrical tests, performed in accordance with NETA ATS and Section A.3.2 - Acceptance Testing of USCG CSTO "Electrical Shore Ties" document.

3.5.1.1 Power Connection Stations and Control Panels

a. Visual and mechanical inspection in accordance with inspection and

test procedures for Instrument Transformers.

b. Electrical tests in accordance with inspection and test procedures for Instrument Transformers.

3.5.1.2 Current Transformers

a. Visual and mechanical inspection in accordance with inspection and test procedures for Instrument Transformers.

b. Electrical tests in accordance with inspection and test procedures for Instrument Transformers.

3.5.1.3 Circuit Breakers

a. Visual and mechanical inspection in accordance with inspection and test procedures for Circuit Breakers, Air, Insulated-Case/Molded-Case.

b. Perform Electrical tests in accordance with inspection and test procedures for Circuit Breakers, Air, Insulated-Case/Molded-Case.

3.5.1.4 Phase Rotation

Phase rotation for shore power AC systems shall follow the NEC arrangement; for bus and cable connections, A-B-C, from front to back, top to bottom, left to right as viewed from the front of enclosure and for shore-tie receptacle phase rotation, "clockwise", as viewed from the front of the receptacle. During final testing with Cutter connected to shore power, if incorrect phase rotation is sense aboard the vessel, this shall be corrected aboard the vessel and not within the power mound.

3.5.1.5 Time Delay Relays

Adjust time delay settings of shunt trip controller from factory shipped settings to match settings of manufacturer's wiring diagrams.

3.6 DEMONSTRATION

Upon completion of the work and at a time approved by the Contracting Officer, the Contractor shall provide instructions by a qualified instructor to the Government personnel in the proper operation and maintenance of the equipment. Government personnel shall receive training comparable to the equipment manufacturer's factory training. The duration of instruction shall be for not less than one 8 hour working day for instruction of operating and maintenance personnel.

-- End of Section --

SECTION 26 20 00

INTERIOR DISTRIBUTION SYSTEM

PART 1 GENERAL

1.1 REFERENCES

The publications listed below form a part of this specification to the extent referenced. The publications are referred to within the text by the basic designation only.

ASTM INTERNATIONAL (ASTM)

ASTM B1	(2013) Standard Specification for Hard-Drawn Copper Wire
ASTM B8	(2011; R 2017) Standard Specification for Concentric-Lay-Stranded Copper Conductors, Hard, Medium-Hard, or Soft

INSTITUTE OF ELECTRICAL AND ELECTRONICS ENGINEERS (IEEE)

IEEE 100	(2000; Archived) The Authoritative Dictionary of IEEE Standards Terms

NATIONAL ELECTRICAL CONTRACTORS ASSOCIATION (NECA)

NECA NEIS 1	(2015) Standard for Good Workmanship in Electrical Construction

NATIONAL ELECTRICAL MANUFACTURERS ASSOCIATION (NEMA)

ANSI C80.1	(2020) American National Standard for Electrical Rigid Steel Conduit (ERSC)
ANSI C80.3	(2020) American National Standard for Electrical Metallic Tubing (EMT)
NEMA WD 1	(1999; R 2020) Standard for General Color Requirements for Wiring Devices
NEMA WD 6	(2016) Wiring Devices Dimensions Specifications

NATIONAL FIRE PROTECTION ASSOCIATION (NFPA)

NFPA 70	(2020; ERTA 20-1 2020; ERTA 20-2 2020; TIA 20-1; TIA 20-2; TIA 20-3; TIA 20-4) National Electrical Code

TELECOMMUNICATIONS INDUSTRY ASSOCIATION (TIA)

TIA-569	(2019e) Telecommunications Pathways and Spaces
TIA-607	(2019d) Generic Telecommunications Bonding

	and Grounding (Earthing) for Customer Premises

UNDERWRITERS LABORATORIES (UL)

UL 6	(2007; Reprint Sep 2019) UL Standard for Safety Electrical Rigid Metal Conduit-Steel
UL 44	(2018; Reprint May 2021) UL Standard for Safety Thermoset-Insulated Wires and Cables
UL 50	(2015) UL Standard for Safety Enclosures for Electrical Equipment, Non-Environmental Considerations
UL 83	(2017; Reprint Mar 2020) UL Standard for Safety Thermoplastic-Insulated Wires and Cables
UL 486A-486B	(2018; Reprint May 2021) UL Standard for Safety Wire Connectors
UL 486C	(2018; Reprint May 2021) UL Standard for Safety Splicing Wire Connectors
UL 489	(2016; Rev 2019) UL Standard for Safety Molded-Case Circuit Breakers, Molded-Case Switches and Circuit-Breaker Enclosures
UL 498	(2017; Reprint Sep 2021) UL Standard for Safety Attachment Plugs and Receptacles
UL 510	(2020) UL Standard for Safety Polyvinyl Chloride, Polyethylene and Rubber Insulating Tape
UL 514A	(2013; Reprint Aug 2017) UL Standard for Safety Metallic Outlet Boxes
UL 514B	(2012; Reprint May 2020) Conduit, Tubing and Cable Fittings
UL 797	(2007; Reprint Mar 2021) UL Standard for Safety Electrical Metallic Tubing -- Steel
UL 943	(2016; Reprint Feb 2018) UL Standard for Safety Ground-Fault Circuit-Interrupters

1.2 DEFINITIONS

Unless otherwise specified or indicated, electrical and electronics terms used in these specifications, and on the drawings, are as defined in IEEE 100.

1.3 RELATED REQUIREMENTS

For work on piers, docks, marinas, etc., 26 27 29 MARINA ELECTRICAL WORK applies. Additions and modifications within that section supersede this section.

1.4 SUBMITTALS

Government approval is required for submittals with a "G" or "S" classification. Submittals not having a "G" or "S" classification are for Contractor Quality Control approval. Submit the following in accordance with Section 01 33 00 SUBMITTAL PROCEDURES:

SD-03 Product Data

Receptacles; G

Circuit Breakers; G

1.5 QUALITY ASSURANCE

1.5.1 Regulatory Requirements

In each of the publications referred to herein, consider the advisory provisions to be mandatory, as though the word, "must" had been substituted for "should" wherever it appears. Interpret references in these publications to the "authority having jurisdiction," or words of similar meaning, to mean the Contracting Officer. Provide equipment, materials, installation, and workmanship in accordance with NFPA 70 unless more stringent requirements are specified or indicated. NECA NEIS 1 shall be considered the minimum standard for workmanship.

1.5.2 Standard Products

Provide materials and equipment that are products of manufacturers regularly engaged in the production of such products which are of equal material, design and workmanship and:

a. Have been in satisfactory commercial or industrial use for 2 years prior to bid opening including applications of equipment and materials under similar circumstances and of similar size.

b. Have been on sale on the commercial market through advertisements, manufacturers' catalogs, or brochures during the 2-year period.

c. Where two or more items of the same class of equipment are required, provide products of a single manufacturer; however, the component parts of the item need not be the products of the same manufacturer unless stated in this section.

1.5.2.1 Alternative Qualifications

Products having less than a 2-year field service record will be acceptable if a certified record of satisfactory field operation for not less than 6000 hours, exclusive of the manufacturers' factory or laboratory tests, is furnished.

1.5.2.2 Material and Equipment Manufacturing Date

Products manufactured more than 3 years prior to date of delivery to site are not acceptable.

1.6 WARRANTY

Provide equipment items supported by service organizations that are reasonably convenient to the equipment installation in order to render satisfactory service to the equipment on a regular and emergency basis during the warranty period of the contract.

PART 2 PRODUCTS

2.1 MATERIALS AND EQUIPMENT

As a minimum, meet requirements of UL, where UL standards are established for those items, and requirements of NFPA 70 for all materials, equipment, and devices.

2.2 CONDUIT AND FITTINGS

Conform to the following:

2.2.1 Rigid Metallic Conduit

2.2.1.1 Rigid, Threaded Zinc-Coated Steel Conduit

ANSI C80.1, UL 6.

2.2.2 Electrical, Zinc-Coated Steel Metallic Tubing (EMT)

UL 797, ANSI C80.3.

2.2.3 Fittings for Metal Conduit and EMT

UL 514B. Ferrous fittings: cadmium- or zinc-coated in accordance with UL 514B.

2.2.3.1 Fittings for Rigid Metal Conduit

Threaded-type. Split couplings unacceptable.

2.2.3.2 Fittings for EMT

Steel compression type.

2.3 OUTLET BOXES AND COVERS

UL 514A, cadmium- or zinc-coated, if ferrous metal.

2.4 JUNCTION BOXES AND PULL BOXES

UL 50; volume greater than 100 cubic inches, NEMA Type 1 enclosure; sheet steel, hot-dip, zinc-coated. Where exposed to wet, damp, or corrosive environments, NEMA Type 4X.

2.5 WIRES AND CABLES

Provide wires and cables in accordance applicable requirements of NFPA 70 and UL for type of insulation, jacket, and conductor specified or indicated. Do not use wires and cables manufactured more than 12 months prior to date of delivery to site.

2.5.1 Conductors

Provide the following:

a. Conductor sizes and capacities shown are based on copper, unless indicated otherwise.

b. Conductors No. 8 AWG and larger diameter: stranded.

c. Conductors No. 10 AWG and smaller diameter: solid.

d. Conductors for remote control, alarm, and signal circuits, classes 1, 2, and 3: stranded unless specifically indicated otherwise.

e. All conductors: copper.

2.5.1.1 Minimum Conductor Sizes

Provide minimum conductor size in accordance with the following:

a. Branch circuits: No. 12 AWG.

b. Class 1 remote-control and signal circuits: No. 14 AWG.

c. Class 2 low-energy, remote-control and signal circuits: No. 16 AWG.

d. Class 3 low-energy, remote-control, alarm and signal circuits: No. 22 AWG.

2.5.2 Color Coding

Provide color coding for service, feeder, branch, control, and signaling circuit conductors.

2.5.2.1 Ground and Neutral Conductors

Provide color coding of ground and neutral conductors as follows:

a. Grounding conductors: Green.

b. Neutral conductors: White.

c. Exception, where neutrals of more than one system are installed in same raceway or box, other neutrals color coding: white with a different colored (not green) stripe for each.

2.5.2.2 Ungrounded Conductors

Provide color coding of ungrounded conductors in different voltage systems as follows:

a. 208/120 volt, three-phase

(1) Phase A - black

(2) Phase B - red

(3) Phase C - blue

2.5.3 Insulation

Unless specified or indicated otherwise or required by NFPA 70, provide power and lighting wires rated for 600-volts, Type THWN/THHN conforming to UL 83 conforming to UL 44, except that grounding wire may be type TW conforming to UL 83; remote-control and signal circuits: Type TW or TF, conforming to UL 83. Where equipment or devices require 90-degree Centigrade (C) conductors, provide only conductors with 90-degree C insulation or better.

2.5.4 Bonding Conductors

ASTM B1, solid bare copper wire for sizes No. 8 AWG and smaller diameter; ASTM B8, Class B, stranded bare copper wire for sizes No. 6 AWG and larger diameter.

2.5.4.1 Bonding Conductor for Telecommunications

Provide a copper conductor Bonding Conductor for Telecommunications between the telecommunications main grounding busbar (PBB) and the electrical service ground in accordance with TIA-607 with No. 6 AWG as the minimum size and size 2 kcmil per linear foot of conductor length up to a maximum size of 750 kcmil.

2.6 SPLICES AND TERMINATION COMPONENTS

UL 486A-486B for wire connectors and UL 510 for insulating tapes. Connectors for No. 10 AWG and smaller diameter wires: insulated, pressure-type in accordance with UL 486A-486B or UL 486C (twist-on splicing connector). Provide solderless terminal lugs on stranded conductors.

2.7 DEVICE PLATES

Provide the following:

a. UL listed, one-piece device plates for outlets to suit the devices installed.

b. For metal outlet boxes, plates on unfinished walls: zinc-coated sheet steel or cast metal having round or beveled edges.

c. Screws: machine-type with countersunk heads in color to match finish of plate.

d. Sectional type device plates are not be permitted.

e. Plates installed in wet locations: gasketed and UL listed for "wet locations."

2.8 RECEPTACLES

Provide the following:

a. UL 498, general purpose specification grade. Residential grade receptacles are not acceptable.

b. Ratings and configurations: as indicated.

c. Bodies: white as per NEMA WD 1.

d. Face and body: thermoplastic supported on a metal mounting strap.

e. Dimensional requirements: per NEMA WD 6.

f. Screw-type, side-wired wiring terminals or of the solderless pressure type having suitable conductor-release arrangement.

g. Grounding pole connected to mounting strap.

h. The receptacle: containing triple-wipe power contacts and double or triple-wipe ground contacts.

2.9 Circuit Breakers

UL 489, thermal magnetic-type having a minimum short-circuit current rating equal to the short-circuit current rating of the panelboard in which the circuit breaker will be mounted. Breaker terminals: UL listed as suitable for type of conductor provided. Circuit breakers must be listed for use in the panelboard where it will be installed.

2.9.1 Multipole Breakers

Provide common trip-type with single operating handle. Design breaker such that overload in one pole automatically causes all poles to open. Maintain phase sequence throughout each panel so that any three adjacent breaker poles are connected to Phases A, B, and C, respectively.

Circuit Breaker With Ground-Fault Circuit Interrupter

UL 943 and NFPA 70. Provide with auto-monitoring (self-test) and lockout features, "push-to-test" button, visible indication of tripped condition, and ability to detect and trip when current imbalance is 6 milliamperes or higher per requirements of UL 943 for Class A ground-fault circuit interrupter devices. Provide 30 milliamperes interrupting current for GFEP type circuit breakers for equipment protection.

2.10 TELECOMMUNICATIONS SYSTEM

Provide system of telecommunications wire-supporting structures (pathway), including: conduits with pull wires and other accessories for telecommunications pathway in accordance with TIA-569 and as specified herein. Additional telecommunications requirements are specified in Section 27 10 00 BUILDING TELECOMMUNICATIONS CABLING SYSTEM.

2.11 GROUNDING AND BONDING EQUIPMENT

2.11.1 Primary Bonding Busbar

Provide corrosion-resistant grounding busbar suitable for indoor installation in accordance with TIA-607. Busbars: plated for reduced contact resistance. If not plated, clean the busbar prior to fastening the conductors to the busbar and apply an anti-oxidant to the contact area to control corrosion and reduce contact resistance. Provide a Primary bonding busbar (PBB) in the telecommunications entrance facility. The Primary bonding busbar (PBB): sized in accordance with the immediate application requirements and with consideration of future growth. Provide Primary bonding busbars with the following:

a. Predrilled copper busbar provided with holes for use with standard sized lugs;

b. Minimum dimensions of 0.25 in thick by 4 in wide for the PBB with length as indicated;

c. Listed by a nationally recognized testing laboratory.

2.12 MANUFACTURER'S NAMEPLATE

Provide on each item of equipment a nameplate bearing the manufacturer's name, address, model number, and serial number securely affixed in a conspicuous place; the nameplate of the distributing agent will not be acceptable.

PART 3 EXECUTION

3.1 INSTALLATION

Electrical installations, including weatherproof and hazardous locations and ducts, plenums and other air-handling spaces: conform to requirements of NFPA 70 and to requirements specified herein.

3.1.1 Wiring Methods

Provide insulated conductors installed in rigid steel conduit or EMT, except where specifically indicated or specified otherwise or required by NFPA 70 to be installed otherwise. Grounding conductor: separate from electrical system neutral conductor. Provide insulated green equipment grounding conductor for circuit(s) installed in conduit and raceways. Minimum conduit size: 1/2 inch in diameter for low voltage lighting and power circuits. Vertical distribution in multiple story buildings: made with metal conduit in fire-rated shafts, with metal conduit extending through shafts for minimum distance of 6 inches. Firestop conduit which penetrates fire-rated walls, fire-rated partitions, or fire-rated floors in accordance with Section 07 84 00 FIRESTOPPING.

3.1.2 Conduit Installation

Install conduit parallel with or at right angles to ceilings, walls, and structural members where conduit will be visible after completion of project.

3.1.2.1 Restrictions Applicable to EMT

a. Do not install underground.

b. Do not encase in concrete, mortar, grout, or other cementitious materials.

c. Do not use in areas subject to physical damage including but not limited to equipment rooms where moving or replacing equipment could physically damage the EMT.

d. Do not use in hazardous areas.

e. Do not use outdoors.

f. Do not use in fire pump rooms.

g. Do not use when the enclosed conductors must be shielded from the effects of High-altitude Electromagnetic Pulse (HEMP).

3.1.2.2 Conduit Support

Support conduit by wall brackets. Plastic cable ties are not acceptable. Fasten by wood screws to wood; by toggle bolts on hollow masonry units; by concrete inserts or expansion bolts on concrete or brick; and by machine screws, welded threaded studs, or spring-tension clamps on steel work. Threaded C-clamps may be used on rigid steel conduit only. Do not weld conduits or pipe straps to steel structures. Do not exceed one-fourth proof test load for load applied to fasteners. Provide vibration resistant and shock-resistant fasteners attached to concrete ceiling. Do not cut main reinforcing bars for any holes cut to depth of more than 1 1/2 inches in reinforced concrete beams or to depth of more than 3/4 inch in concrete joints. Fill unused holes. In partitions of light steel construction, use sheet metal screws. Do not share supporting means between electrical raceways and mechanical piping or ducts.

3.1.2.3 Directional Changes in Conduit Runs

Make changes in direction of runs with symmetrical bends or cast-metal fittings. Make field-made bends and offsets with hickey or conduit-bending machine. Do not install crushed or deformed conduits. Avoid trapped conduits. Prevent plaster, dirt, or trash from lodging in conduits, boxes, fittings, and equipment during construction. Free clogged conduits of obstructions.

3.1.2.4 Locknuts and Bushings

Fasten conduits to sheet metal boxes and cabinets with two locknuts where required by NFPA 70, where insulated bushings are used, and where bushings cannot be brought into firm contact with the box; otherwise, use at least minimum single locknut and bushing. Provide locknuts with sharp edges for digging into wall of metal enclosures. Install bushings on ends of conduits, and provide insulating type where required by NFPA 70.

3.1.3 Boxes, Outlets, and Supports

Provide boxes in wiring and raceway systems wherever required for pulling of wires, making connections, and mounting of devices or fixtures. Boxes for metallic raceways: cast-metal, hub-type when located in wet locations, when surface mounted on outside of exterior surfaces, or when surface mounted on interior walls exposed up to 7 feet above floors and walkways, and when specifically indicated. Boxes in other locations: sheet steel. Provide each box with volume required by NFPA 70 for number of conductors enclosed in box. Provide gaskets for cast-metal boxes installed in wet locations. Fasten boxes and supports with wood screws on wood, with bolts and expansion shields on concrete or brick, with toggle bolts on hollow masonry units, and with machine screws or welded studs on steel. In open overhead spaces, cast boxes threaded to raceways need not be separately supported except where used for fixture support; support sheet metal boxes directly from building structure or by bar hangers. Where bar hangers are used, attach bar to raceways on opposite sides of box, and support raceway with approved-type fastener maximum 24 inches from box. When penetrating reinforced concrete members, avoid cutting reinforcing steel.

3.1.3.1 Boxes

Boxes for use with raceway systems: minimum 1 1/2 inches deep, except where shallower boxes required by structural conditions are approved. Boxes for other than lighting fixture outlets: minimum 4 inches square, except that 4 by 2 inch boxes may be used where only one raceway enters outlet.

3.1.3.2 Pull Boxes

Provide boxes with screw-fastened covers. Where several feeders pass through common pull box, tag feeders to indicate clearly electrical characteristics, circuit number, and panel designation.

3.1.4 Conductor Identification

Provide conductor identification within each enclosure where tap, splice, or termination is made. For conductors No. 6 AWG and smaller diameter, provide color coding by factory-applied, color-impregnated insulation. For conductors No. 4 AWG and larger diameter, provide color coding by plastic-coated, self-sticking markers; colored nylon cable ties and plates; or heat shrink-type sleeves. Provide telecommunications system conductor identification as specified in Section 27 10 00 BUILDING TELECOMMUNICATIONS CABLING SYSTEMS.

3.1.5 Splices

Make splices in accessible locations. Make splices in conductors No. 10 AWG and smaller diameter with insulated, pressure-type connector. Make splices in conductors No. 8 AWG and larger diameter with solderless connector, and cover with insulation material equivalent to conductor insulation.

3.1.6 Covers and Device Plates

Install with edges in continuous contact with finished wall surfaces without use of mats or similar devices. Plaster fillings are not permitted. Install plates with alignment tolerance of 1/16 inch. Use of sectional-type device plates are not permitted. Provide gasket for plates installed in wet locations.

3.1.7 Grounding and Bonding

Provide in accordance with NFPA 70. Ground exposed, non-current-carrying metallic parts of electrical equipment, metallic raceway systems, grounding conductor in metallic raceways, and telecommunications system grounds. In addition to the requirements specified herein, provide telecommunications grounding in accordance with TIA-607.

3.1.7.1 Telecommunications System

Provide telecommunications grounding in accordance with the following:

a. Telecommunications Grounding Busbars: Provide a Primary bonding busbar (PBB) in the telecommunications entrance facility. Install the PBB as close to the electrical service entrance grounding connection as practicable. Maintain a minimum of 2 inches separation from the wall is recommended to allow access to the rear of the busbar and

adjust the mounting height to accommodate overhead or underfloor cable routing.

b. Telecommunications Bonding Conductors: Provide main telecommunications service equipment ground consisting of separate bonding conductor for telecommunications, between the PBB and readily accessible grounding connection of the electrical service. Grounding and bonding conductors should not be placed in ferrous metallic conduit. If it is necessary to place grounding and bonding conductors in ferrous metallic conduit that exceeds 3 feet in length, bond the conductors to each end of the conduit using a grounding bushing or a No. 6 AWG conductor, minimum.

c. Telecommunications Grounding Connections: Telecommunications grounding connections to the PBB: utilize listed compression two-hole lugs, exothermic welding, suitable and equivalent one hole non-twisting lugs, or other irreversible compression type connections. Bond all metallic pathways, cabinets, and racks for telecommunications cabling and interconnecting hardware located within the same room or space as the PBB to the PBB. In a metal frame (structural steel) building, where the steel framework is readily accessible within the room; bond each PBB to the vertical steel metal frame using a minimum No. 6 AWG conductor. Where the metal frame is external to the room and readily accessible, bond the metal frame to the SBB or PBB with a minimum No. 6 AWG conductor. When practicable because of shorter distances and, where horizontal steel members are permanently electrically bonded to vertical column members, the PBB may be bonded to these horizontal members in lieu of the vertical column members. All connectors used for bonding to the metal frame of a building must be listed for the intended purpose.

3.1.8 Repair of Existing Work

Perform repair of existing work as follows:

3.1.8.1 Workmanship

Lay out work in advance. Exercise care where cutting, channeling, chasing, or drilling of floors, walls, partitions, ceilings, or other surfaces is necessary for proper installation, support, or anchorage of conduit, raceways, or other electrical work. Repair damage to buildings, piping, and equipment using skilled craftsmen of trades involved.

3.1.8.2 Continuation of Service

Maintain continuity of existing circuits of equipment to remain. Maintain existing circuits of equipment energized. Restore circuits wiring and power which are to remain but were disturbed during demolition back to original condition.

-- End of Section --

SECTION 26 27 29

MARINA ELECTRICAL WORK

PART 1 GENERAL

1.1 REFERENCES

The publications listed below form a part of this specification to the extent referenced. The publications are referred to within the text by the basic designation only.

ASTM INTERNATIONAL (ASTM)

ASTM B1	(2013) Standard Specification for Hard-Drawn Copper Wire
ASTM B8	(2011; R 2017) Standard Specification for Concentric-Lay-Stranded Copper Conductors, Hard, Medium-Hard, or Soft
ASTM D709	(2017) Standard Specification for Laminated Thermosetting Materials

NATIONAL ELECTRICAL CONTRACTORS ASSOCIATION (NECA)

NECA NEIS 1	(2015) Standard for Good Workmanship in Electrical Construction

NATIONAL ELECTRICAL MANUFACTURERS ASSOCIATION (NEMA)

NEMA TC 14	(2002) Standard for Reinforced Thermosetting Resin Conduit (RTRC) and Fittings

NATIONAL FIRE PROTECTION ASSOCIATION (NFPA)

NFPA 70	(2020; ERTA 20-1 2020; ERTA 20-2 2020; TIA 20-1; TIA 20-2; TIA 20-3; TIA 20-4) National Electrical Code
NFPA 303	(2021) Fire Protection Standards for Marinas and Boatyards

UNDERWRITERS LABORATORIES (UL)

UL 83	(2017; Reprint Mar 2020) UL Standard for Safety Thermoplastic-Insulated Wires and Cables
UL 486A-486B	(2018; Reprint May 2021) UL Standard for Safety Wire Connectors
UL 510	(2020) UL Standard for Safety Polyvinyl Chloride, Polyethylene and Rubber Insulating Tape

UL 514C (2014; Reprint Feb 2020) UL Standard for Safety Nonmetallic Outlet Boxes, Flush-Device Boxes, and Covers

1.2 RELATED REQUIREMENTS

26 20 00 INTERIOR DISTRIBUTION SYSTEM, applies to this section with additions and modifications specified herein.

1.3 SUBMITTALS

Government approval is required for submittals with a "G" or "S" classification. Submittals not having a "G" or "S" classification are for Contractor Quality Control approval. Submit the following in accordance with Section 01 33 00 SUBMITTAL PROCEDURES:

SD-03 Product Data

Conduit and Fittings (each type)
Grounding and Bonding Equipment
Wires and Cables

Outlet Boxes and Covers

Splice and Termination Components

Cabinets, Junction Boxes and Pull Boxes

Conduit Support

600-volt Wiring Test; G

Grounding System Test; G

1.4 QUALITY ASSURANCE

1.4.1 Grounding System Tests

Submittal must include written results of each test and indicate location of rods as well as resistance and soil conditions at the time measurements were made.

PART 2 PRODUCTS

2.1 MATERIALS AND EQUIPMENT

Materials, equipment, and devices must, as a minimum, meet requirements of UL where UL standards are established for those items, and requirements of NFPA 70 and NFPA 303.

2.2 CONDUIT AND FITTINGS

Rigid nonmetallic conduit andPlastic-coated rigid steel conduit conforming to the following:

2.2.1 Rigid Nonmetallic Conduit

Reinforced Thermosetting Resin Conduit (RTRC) conduit in accordance with NEMA TC 14.

2.3 OUTLET BOXES AND COVERS

UL 514C.

2.4 CABINETS, JUNCTION BOXES AND PULL BOXES

Volume greater than 200 cubic inches, or nonmetallic to match wiring method.

2.5 WIRES AND CABLES

Must meet applicable requirements of NFPA 70 and UL for type of insulation, jacket, and conductor specified or indicated. Do not provide wires and cables manufactured more than 12 months prior to date of delivery to site.

2.5.1 Conductors

No. 8 AWG and larger diameter must be stranded; No. 10 AWG and smaller must be solid, except that conductors for remote control, alarm, and signal circuits, Classes 1, 2, and 3, must be stranded. Conductors must be copper. Conductor sizes and ampacities shown are based on copper.

2.5.1.1 Minimum Conductor Sizes

Minimum size for branch circuits must be No. 12 AWG; for Class 1 remote-control and signal circuits, No. 14 AWG; for Class 2 low-energy, remote-control and signal circuits, No. 18 AWG; and for Class 3 low-energy, remote-control, alarm, and signal circuits, No. 22 AWG.

2.5.2 Color Coding

Provide for service, feeder, branch, control, and signaling circuit conductors. Color must be green for grounding conductors and white for neutrals; except where neutrals of more than one system are installed in same raceway or box, other neutral must be white with colored, except green, stripe. Color of ungrounded conductors in different voltage systems must be as follows:

a. 120/208 volt, three phase:

(1) Phase A - black

(2) Phase B - red

(3) Phase C - blue

b. 277/480 volt, three phase:

(1) Phase A - brown

(2) Phase B - orange

(3) Phase C - yellow

2.5.3 Insulation

Unless otherwise required by NFPA 70, power and lighting wires must be 600-volt, Type THWN-2, except that grounding wire may be Type TW; remote-control and signal circuits must be Type TW, THW, or TF.

Conductors must conform to UL 83. Where lighting fixtures require 90-degree C conductors, provide only conductors with 90-degree C insulation or better.

2.5.4 Bonding Conductors

ASTM B1, solid bare copper wire for sizes No. 8 AWG and smaller diameter; ASTM B8, Class B, stranded bare copper wire for sizes No. 6 AWG and larger diameter.

2.5.5 Splice and Termination Components

UL 486A-486B, for wire connectors, and UL 510 for insulating tapes. Connectors for No. 10 AWG and smaller diameter wires must be insulated, pressure type in accordance with UL 486A-486B, twist-on splicing connector. Provide solderless terminal lugs on stranded conductors.

2.6 DEVICE PLATES

Provide UL listed, one-piece device plates for outlets to suit the devices installed. Plates must be nylon or lexan, minimum 0.10 inch wall thickness. Plates must be same color as receptacle with which they are mounted. Screws must be stainless steel machine type with countersunk heads in color to match finish of plate. Use of sectional-type device plates will not be permitted. Plates must be gasketed and UL listed for wet locations.

2.7 TELEPHONE SYSTEM

Provide system of telephone wire-supporting structures, terminal boxes, and other accessories for telephone outlets, and telephone cabinets.

2.7.1 Outlet Boxes & Terminal Cabinets

NEMA 4X stainless steel with backboard. Hardware must be stainless steel.

2.8 MOUNTING STRAPS

Fiberglass or PVC coated steel, two-hole type designed for rigid steel conduit support. PVC coating must be between 20 and 40 mil thickness.

2.9 GROUNDING AND BONDING EQUIPMENT2.9.1 Grounding Connections

Make grounding connections which are buried or otherwise normally inaccessible, by exothermic weld or high compression connector.

a. Make exothermic welds strictly in accordance with the weld manufacturer's written recommendations. Welds which are "puffed up" or which show convex surfaces indicating improper cleaning are not acceptable. Mechanical connectors are not required at exothermic welds.

b. Make high compression connections using a hydraulic or electric compression tool to provide the correct circumferential pressure. Provide tools and dies as recommended by the manufacturer. Use an embossing die code or other standard method to provide visible indication that a connector has been adequately compressed on the ground wire.

2.10 FIELD FABRICATED NAMEPLATES

Provide field fabricated nameplates in accordance with the following:

a. ASTM D709.

b. Provide laminated plastic nameplates for each equipment enclosure, relay, switch, and device; as specified or as indicated on the drawings.

c. Each nameplate inscription: identify the function and, when applicable, the position.

d. Nameplates: melamine plastic, 0.125 inch thick, white with black center core.

e. Surface: matte finish. Corners: square. Accurately align lettering and engrave into the core.

f. Minimum size of nameplates: one by 2.5 inches.

g. Lettering size and style: a minimum of 0.25 inch high normal block style.

2.11 ARC FLASH WARNING LABEL

Provide arc flash warning labels on electrical equipment likely to require examination, servicing, or maintenance while energized. Some typical types of equipment include pad-mounted transformers, switchgears, switchboards, panelboards, and disconnect switches. Place label on the outside of the enclosure warning of potential electrical arc flash hazards and appropriate PPE required. Provide label format as indicated.

2.12 PIER LIGHTING

Provide as specified in Section 26 56 00 EXTERIOR LIGHTING.

PART 3 EXECUTION

3.1 INSTALLATION

Electrical installations must conform to requirements of NFPA 70 and to requirements specified herein.

3.1.1 Wiring Methods

Provide insulated conductors installed in rigid conduit, except where specifically indicated or specified otherwise or required by NFPA 70 to be installed otherwise. Grounding conductor must be separate from electrical system neutral conductor. Provide insulated, green equipment grounding conductors for circuits installed in conduit and raceways. Minimum conduit size must be 3/4 inch in diameter for low-voltage lighting and power circuits.

3.1.1.1 Underground Conduit Other Than Service Entrance

fiberglass.

3.1.2 Conduit Installation

Install conduit parallel with or at right angles to structural members.

3.1.2.1 Conduit Support

Support conduit by nonmetallic pipe straps or wall brackets. Fasten by stainless steel wood screws to wood and by concrete inserts or expansion bolts on concrete. Threaded C-clamps may be provided on rigid steel conduit only. Load applied to fasteners must not exceed one-fourth proof test load. Holes cut to depth of more than 1 1/2 inches in reinforced concrete beams or to depth of more than 3/4 inch in concrete joints must not cut main reinforcing bars. Fill unused holes.

3.1.2.2 Directional Changes in Conduit Runs

Make changes in direction of runs with symmetrical bends or molded fittings. Make field-made bends and offsets with conduit-bending machine suitable for type of conduit used. Do not install crushed or deformed conduits. Avoid trapped conduits. Prevent dirt or trash from lodging in conduits, boxes, fittings, and equipment during construction. Free clogged conduits of obstructions.

3.1.2.3 Locknuts and Bushings

Fasten conduits to sheet metal boxes and cabinets with two locknuts where required by NFPA 70, where insulated bushings are provided, and where bushings cannot be brought into firm contact with the box; otherwise, provide minimum single locknut and bushing. Locknuts must have sharp edges for digging into wall of metal enclosures. Install bushings on ends of conduits, and provide insulating type where required by NFPA 70.

3.1.2.4 Conduit and Cable Connections

Provide watertight connectors for conduit and cable connections to boxes and cabinets.

3.1.3 Conductor Identification

Provide within each enclosure where tap, splice, or termination is made. For conductor sizes No. 6 AWG and smaller diameter, color coding must be by factory-applied, color-impregnated insulation. For conductor sizes No. 4 AWG and larger diameter, color coding must be by plastic-coated, self-sticking markers; colored nylon cable ties and plates; or heat shrink-type sleeves. Identify control circuit terminations.

3.1.4 Splices

Make splices in accessible locations. Make splices in conductor sizes No. 10 AWG and smaller diameter with insulated, pressure-type connector. Make splices in conductor sizes No. 8 AWG and larger diameter with solderless connector, and cover with insulation material equivalent to conductor insulation.

3.1.5 Covers and Device Plates

Install gasketed plates with alignment tolerance of 1/16 inch.

3.1.6 Grounding and Bonding

NFPA 70. Ground-exposed, noncurrent-carrying metallic parts of electrical equipment, metallic raceway systems, grounding conductor in metallic and nonmetallic raceways, and neutral conductor of wiring systems. Where ground-fault protection is employed, ensure that connection of ground and neutral does not interfere with correct operation of fault protection.

3.1.6.1 Resistance

Maximum resistance-to-ground of grounding system must not exceed 5 ohms under dry conditions. Where resistance obtained exceeds 5 ohms, contact Contracting Officer for further instructions.

3.1.6.2 Telephone Service

Provide main telephone service equipment ground consisting of separate No. 6 AWG ground wire in conduit between equipment backboard and readily accessible grounding connection. Equipment end of ground wire must consist of coiled length at least twice as long as terminal cabinet.

3.1.7 Equipment Connections

Provide power wiring for the connection of motors and control equipment under this section. Except as otherwise noted or specified, automatic control wiring, control devices, and protective devices within the control circuitry are not included in this section, but must be provided under the section specifying associated equipment.

3.2 REPAIR AND SERVICE OF EXISTING STRUCTURES AND EQUIPMENT

Perform repair of existing structures and equipment as follows:

3.2.1 Workmanship

NECA NEIS 1. Lay out work in advance. Exercise care where cutting, channeling, chasing, or drilling of existing surfaces is necessary for proper installation, support, or anchorage of conduit, raceways, or other electrical work. Repair damage to structure, piping, and equipment using skilled craftsmen of trades involved.

3.2.2 Existing Concealed Wiring to be Removed

Disconnect from its source. Remove conductors, cut exposed conduit flush with structure, and seal openings with material to match adjacent surfaces.

3.2.3 Continuation of Service
Maintain continuity of service to existing circuits of equipment to remain. Existing circuits of equipment must remain energized. Circuits which are to remain but were disturbed during demolition must have circuits wiring and power restored back to original condition.

3.3 FIELD QUALITY CONTROL

Furnish test equipment and personnel. Notify Contracting Officer 5 working days prior to each test.

3.3.1 Devices Subject to Manual Operation

Operate each device subject to manual operation at least five times, demonstrating satisfactory operation each time.

3.3.2 Transformer Tests3.3.3 600-Volt Wiring Test

Test wiring rated 600 volts and less to verify that no short circuits or accidental grounds exist. Perform insulation resistance tests on wiring No. 6 AWG and larger diameter using instrument which applies voltage of approximately 500 volts to provide direct reading of resistance. Minimum resistance must be 250,000 ohms.

3.3.4 Grounding System Test

Test grounding system to ensure continuity and resistance to ground is not excessive. Test each ground rod for resistance to ground before making connections to rod; tie grounding system together and test for resistance to ground. Make resistance measurements in dry weather, not earlier than 48 hours after rainfall. Submit written results of each test to Contracting Officer, and indicate location of rods as well as resistance and soil conditions at time measurements were made.

-- End of Section --

SECTION 26 56 00

EXTERIOR LIGHTING

PART 1 GENERAL

1.1 REFERENCES

The publications listed below form a part of this specification to the extent referenced. The publications are referred to within the text by the basic designation only.

AMERICAN ASSOCIATION OF STATE HIGHWAY AND TRANSPORTATION OFFICIALS (AASHTO)

AASHTO LTS	(2013; Errata 2013) Standard Specifications for Structural Supports for Highway Signs, Luminaires and Traffic Signals

AMERICAN SOCIETY OF CIVIL ENGINEERS (ASCE)

ASCE 7-16	(2017; Errata 2018; Supp 1 2018) Minimum Design Loads and Associated Criteria for Buildings and Other Structures

ASTM INTERNATIONAL (ASTM)

ASTM B108/B108M	(2019) Standard Specification for Aluminum-Alloy Permanent Mold Castings
ASTM B117	(2019) Standard Practice for Operating Salt Spray (Fog) Apparatus

EUROPEAN UNION (EU)

Directive 2011/65/EU	(2011) Restriction of the Use of Certain Hazardous Substances in Electrical and Electronic Equipment

ILLUMINATING ENGINEERING SOCIETY (IES)

ANSI/IES LM-79	(2019) Approved Method: Electrical and Photometric Measurements of Solid State Lighting Products
ANSI/IES LM-80	(2020) Approved Method: Measuring Luminous Flux and Color Maintenance of LED Packages, Arrays and Modules
ANSI/IES LS-1	(2020) Lighting Science: Nomenclature and Definitions for Illuminating Engineering
ANSI/IES RP-8	(2018; Addenda 1 2020; Errata 1-2 2021) Recommended Practice for Design and Maintenance of Roadway and Parking Facility Lighting

ANSI/IES TM-15	(2020) Technical Memorandum: Luminaire Classification System for Outdoor Luminaires
ANSI/IES TM-21	(2021) Technical Memorandum: Projecting Long-TermLuminous, Photon, and Radiant Flux Maintenance of LED Light Sources
IES Lighting Library	IES Lighting Library

INSTITUTE OF ELECTRICAL AND ELECTRONICS ENGINEERS (IEEE)

IEEE 100	(2000; Archived) The Authoritative Dictionary of IEEE Standards Terms
IEEE C62.41.2	(2002) Recommended Practice on Characterization of Surges in Low-Voltage (1000 V and Less) AC Power Circuits

NATIONAL ELECTRICAL MANUFACTURERS ASSOCIATION (NEMA)

ANSI C136.3	(2020) Roadway and Area Lighting Equipment - Luminaire Attachments
ANSI C136.13	(2020) Roadway and Area Lighting Equipment - Metal Brackets for Wood Poles
ANSI C136.21	(2014) American National Standard for Roadway and Area Lighting Equipment - Vertical Tenons Used with Post-Top-Mounted Luminaires
NEMA 250	(2020) Enclosures for Electrical Equipment (1000 Volts Maximum)
NEMA ANSLG C78.377	(2017) Electric Lamps— Specifications for the Chromaticity of Solid State Lighting Products
NEMA C82.77-10	(2020) Harmonic Emission Limits - Related Power Quality Requirements
NEMA C136.31	(2018) Roadway and Area Lighting Equipment - Luminaire Vibration
NEMA IEC 60529	(2004) Degrees of Protection Provided by Enclosures (IP Code)
NEMA SSL 1	(2016) Electronic Drivers for LED Devices, Arrays, or Systems
NEMA SSL 3	(2011) High-Power White LED Binning for General Illumination

NATIONAL FIRE PROTECTION ASSOCIATION (NFPA)

NFPA 70	(2023) National Electrical Code

UNDERWRITERS LABORATORIES (UL)

UL 773	(2016; Reprint Jul 2020) UL Standard for Safety Plug-In, Locking Type Photocontrols for Use with Area Lighting
UL 773A	(2016; Reprint Jun 2020) UL Standard for Safety Nonindustrial Photoelectric Switches for Lighting Control
UL 1310	(2018; Reprint Jun 2022) UL Standard for Safety Class 2 Power Units
UL 1598	(2021; Reprint Jun 2021) Luminaires
UL 8750	(2015; Reprint Sep 2021) UL Standard for Safety Light Emitting Diode (LED) Equipment for Use in Lighting Products

1.2 DEFINITIONS

a. Unless otherwise specified or indicated, electrical and electronics terms used in these specifications and on the drawings must be as defined in IEEE 100 and ANSI/IES LS-1.

b. For LED luminaire light sources, "Useful Life" is the operating hours before reaching 70 percent of the initial rated lumen output (L70) with no catastrophic failures under normal operating conditions. This is also known as 70 percent "Rated Lumen Maintenance Life" as defined in ANSI/IES LM-80.

c. For LED luminaires, "Luminaire Efficacy" (LE) is the appropriate measure of energy efficiency, measured in lumens/watt. This is gathered from LM-79 data for the luminaire, in which absolute photometry is used to measure the lumen output of the luminaire as one entity, not the source separately and then the source and housing together.

d. Total Harmonic Distortion (THD) is the Root Mean Square (RMS) of all the harmonic components divided by the total fundamental current.

e. The "Groundline Section" of wood poles is that portion of the pole between one foot above, and 2 feet below the groundline.

1.3 SUBMITTALS

Government approval is required for submittals with a "G" or "S" classification. Submittals not having a "G" or "S" classification are [for Contractor Quality Control approval.][for information only. When used, a code following the "G" classification identifies the office that will review the submittal for the Government.] Submit the following in accordance with Section 01 33 00 SUBMITTAL PROCEDURES:

SD-02 Shop Drawings

Luminaire Drawings; G

Pole Drawings; G

SD-03 Product Data

Luminaires; G

Light Sources; G

LED Drivers; G

Luminaire Warranty; G

Lighting Controls Warranty; G

Pole Warranty; G

Photosensors; G

Poles; G

Brackets

SD-06 Test Reports

ANSI/IES LM-79 Test Report; G

ANSI/IES LM-80 Test Report; G

ANSI/IES TM-21 Test Report; G

SD-08 Manufacturer's Instructions

Poles

SD-10 Operation and Maintenance Data

Lighting System, Data Package 5; G

1.4 QUALITY ASSURANCE

Data, drawings, and reports must employ the terminology, classifications and methods prescribed by the IES Lighting Library as applicable, for the lighting system specified.

1.4.1 Drawing Requirements

1.4.1.1 Luminaire Drawings

Include dimensions, effective projected area (EPA), weight, accessories, and installation and construction details. Photometric data, including CRI, CCT, TM-15-11 BUG rating, LED driver type, zonal lumen data, and candlepower distribution data per LM-79 must accompany shop drawings.

1.4.1.2 Pole Drawings

Include dimensions, wind load determined in accordance with ASCE 7-16, pole deflection, pole class, and other applicable information.

1.4.2 Luminaire Design Data

a. Provide distribution data according to IES classification type as

defined in IES Lighting Library and ANSI/IES RP-8.

b. B.U.G. rating for the installed position as defined by ANSI/IES TM-15 and shielding as defined by ANSI/IES RP-8.

c. Provide safety certification and file number for the luminaire family. Include listing, labeling and identification in accordance with NFPA 70 (NEC). Applicable testing bodies are determined by the US Occupational Safety Health Administration (OSHA) as Nationally Recognized Testing Laboratories (NRTL) and include: CSA (Canadian Standards Association), ETL (Edison Testing Laboratory), and UL (Underwriters Laboratories).

d. Provide long term lumen maintenance projections for each LED luminaire in accordance with ANSI/IES TM-21. Data used for projections must be obtained from testing in accordance with ANSI/IES LM-80.

e. Provide wind loading calculations for luminaires mounted on poles. Weight and effective projected area (EPA) of luminaires and mounting brackets must not exceed maximum rating of pole as installed in particular wind zone area.

1.4.3 ANSI/IES LM-79 Test Report

Submit test report on manufacturer's standard production model of specified luminaire. Testing must be performed at the same operating drive current as specified luminaire. Include all applicable and required data as outlined under "14.0 Test Report" in ANSI/IES LM-79.

1.4.4 ANSI/IES LM-80 Test Report

Submit report on manufacturer's standard production LED light source (package, array, or module) of specified luminaire. Testing must be performed at the same operating drive current as specified luminaire. Include all applicable and required data as outlined under "8.0 Test Report" in ANSI/IES LM-80.

1.4.5 ANSI/IES TM-21 Test Report

Submit test report on manufacturer's standard production LED light source (package, array or module) of specified luminaire. Testing must be performed at the same operating drive current as specified luminaire. Include all applicable and required data, as well as required interpolation information as outlined under "7.0 Report" in ANSI/IES TM-21.

1.4.6 Test Laboratories

Test laboratories for the ANSI/IES LM-79 and ANSI/IES LM-80 test reports must be one of the following:

a. National Voluntary Laboratory Accreditation Program (NVLAP) accredited for solid-state lighting testing as part of the Energy-Efficient Lighting Products laboratory accreditation program.

b. One of the qualified labs listed on the Department of Energy - Energy Efficiency & Renewable Energy, Solid-State Lighting web site.

c. One of the EPA-Recognized Laboratories listed at for LM-80 testing.

1.4.7 Regulatory Requirements

Equipment, materials, installation, and workmanship must be in accordance with the mandatory provisions of NFPA 70 unless more stringent requirements are specified or indicated. Provide luminaires and assembled components that are approved by and bear the label of UL for the applicable location and conditions unless otherwise specified.

1.4.8 Standard Products

Provide materials and equipment that are products of manufacturers regularly engaged in the production of such products which are of equal material, design and workmanship. Products must have been in satisfactory commercial or industrial use for six months prior to bid opening. The six-month period must include applications of equipment and materials under similar circumstances and of similar size. The product must have been on sale on the commercial market through advertisements, manufacturers' catalogs, or brochures during the six-month period. Where two or more items of the same class of equipment are required, these items must be products of a single manufacturer; however, the component parts of the item need not be the products of the same manufacturer unless stated in this section.

1.4.8.1 Alternative Qualifications

Products having less than a six-month field service record will be acceptable if a certified record of satisfactory field operation for not less than 6000 hours, exclusive of the manufacturers' factory or laboratory tests, is furnished.

1.4.8.2 Material and Equipment Manufacturing Date

Do not use products manufactured more than six months prior to date of delivery to site, unless specified otherwise.

1.5 DELIVERY, STORAGE, AND HANDLING OF POLES

1.5.1 Aluminum Poles

Do not store poles on ground. Support poles so they are at least one foot above ground level and growing vegetation. Do not remove factory-applied pole wrappings until just before installing pole.

1.6 WARRANTY

Support all equipment items by service organizations which are reasonably convenient to the equipment installation in order to render satisfactory service to the equipment on a regular and emergency basis during the warranty period of the contract.

1.6.1 Luminaire Warranty

Provide and transfer to the government the original LED luminaire manufacturers standard commercial warranty for each different luminaire manufacturer used in the project.

a. Provide a written five year minimum replacement warranty for material, luminaire finish, and workmanship. Provide written warranty document that contains all warranty processing information needed, including

customer service point of contact, whether or not a return authorization number is required, return shipping information, and closest return location to the luminaire location.

(1) Material warranty must include:

(a) All LED drivers and integral control equipment.

(b) Replacement when more than 15 percent of LED sources in any lightbar or subassembly(s) are defective, non-starting, or operating below 70 percent of specified lumen output.

b. Warranty period must begin in accordance with the manufacturer's standard warranty starting date.

c. Provide replacements that are promptly shipped, without charge, to the using Government facility point of contact and that are identical to or an improvement upon the original equipment. All replacements must include testing of new components and installation.

1.6.2 Lighting Controls Warranty

Provide and transfer to the government the original lighting controls manufacturers standard commercial warranty for each different lighting controls manufacturer used in the project. Warranty coverage must begin from date of final system commissioning or three months from date of delivery, whichever is the earliest. Warranty service must be performed by a factory-trained engineer or technician.

a. Unless otherwise noted, provide a written five year minimum warranty on the complete system for all systems with factory commissioning. Provide warranty that covers 100 percent of the cost of any replacement parts and services required over the five years which are directly attributable to the product failure. Failures include, but are not limited to, the following:

(1) Damage of electronic components due to transient voltage surges.

(2) Failure of control devices, including but not limited to photosensors and motion sensors.

b. Provide a written five year minimum warranty on all input devices against defect in workmanship or materials provided by device manufacturer.

c. Provide a written five year minimum warranty on all control components attached to luminaires against defect in workmanship or materials.

1.6.3 Pole Warranty

Provide and transfer to the government the original pole manufacturers standard commercial warranty for each different pole manufacturer used in the project. Warranty coverage must begin from date of final system commissioning or three months from date of delivery, whichever is the earliest. Provide a written three year minimum replacement warranty for material, luminaire finish, and workmanship. Warranty service must be performed by a factory-trained engineer or technician.

1.7 OPERATION AND MAINTENANCE MANUALS

1.7.1 Lighting System

Provide operation and maintenance manuals for the lighting system in accordance with Section 01 78 23 OPERATION AND MAINTENANCE DATA that provide basic data relating to the design, operation, and maintenance of the lighting system. Include the following:

a. Manufacturers' operating and maintenance manuals.

b. Luminaire shop drawings for modified and custom luminaires.

c. Luminaire Manufacturers' standard commercial warranty information as specified in paragraph LUMINAIRE WARRANTY.

PART 2 PRODUCTS

2.1 PRODUCT COORDINATION

2.2 LUMINAIRES

UL 1598, NEMA C82.77-10. Provide luminaires as indicated in the luminaire schedule and details on project plans, complete with light source, wattage, and lumen output indicated. All luminaires of the same type must be provided by the same manufacturer. Luminaires must be specifically designed for use with the LED driver and light source provided.

2.2.1 Luminaires

UL 8750, ANSI/IES LM-79, ANSI/IES LM-80. For all luminaires, provide:

a. Complete system with LED drivers and light sources.

b. Housing constructed of non-corrosive materials. All new aluminum housings must be anodized or powder-coated. All new steel housings must be treated to be corrosion resistant.

c. ANSI/IES TM-21, ANSI/IES LM-80. Minimum L70 lumen maintenance value of 50,000 hours unless otherwise indicated in the luminaire schedule. Luminaire drive current value must be identical to that provided by test data for luminaire in question.

d. Minimum efficacy as specified in the luminaire schedule. Theoretical models of initial lamp lumens per watt are not acceptable. If efficacy values are not listed in the luminaire schedule, provide luminaires that meet the following minimum values: 119 LPW for pole-mounted area lighting.

e. Product rated for operation within an ambient temperature range of minus 22 degrees F to 104 degrees F.

f. UL listed for wet locations. Optical compartment for LED luminaires must be sealed and rated a minimum of IP65 per NEMA IEC 60529.

g. IES Lighting Library. Light distribution and NEMA field angle classifications as indicated in luminaire schedule on project plans.

h. Housing finish that is baked-on enamel, anodized, or baked-on powder coat paint. Finish must be capable of surviving ASTM B117 salt fog environment testing for 2500 hours minimum without blistering or peeling.

i. LED driver and light source package, array, or module are accessible for service or replacement without removal or destruction of luminaire.

j. ANSI/IES TM-15. Does not exceed the BUG ratings as listed in the luminaire schedule.. If BUG ratings are not listed in the luminaire schedule, provide luminaires that meet the following minimum values for each application and mounting conditions: B3-U0-G3 BUG rating for pole-mounted area lighting.

k. Fully assembled and electrically tested prior to shipment from factory.

l. Finish color is as indicated in the luminaire schedule or detail on the project plans.

m. Lenses constructed of clear tempered glass or UV-resistant acrylic. Provide polycarbonate vandal-resistant lenses.

n. All factory electrical connections are made using crimp, locking, or latching style connectors. Twist-style wire nuts are not acceptable.

o. NEMA C136.31. Comply with 3G vibration testing.

p. Luminaire arm bolts constructed from 304 stainless steel or zinc-plated steel.

q. Wiring compartment on pole-mounted, street and area luminaires is accessible without the use of hand tools to manipulate small screws, bolts, or hardware.

r. Incorporate modular electrical connections, and construct luminaires to allow replacement of all or any part of the optics, heat sinks, LED drivers, surge suppressors and other electrical components using only a simple tool, such as a manual or cordless electric screwdriver.

s. ANSI C136.3. For all roadway and area luminaires, provide products with an integral tilt adjustment of plus or minus 5 degrees to allow the unit to be leveled.

2.3 LIGHT SOURCES

NEMA ANSLG C78.377, NEMA SSL 3. Provide type, lumen rating, and wattage as indicated in luminaire schedule on project plans.

2.3.1 LED Light Sources

Provide LED light sources that meet the following requirements:

a. NEMA ANSLG C78.377. Emit white light and have a nominal Correlated Color Temperature (CCT) of 4000 Kelvin.

b. Minimum Color Rendering Index (CRI) of 70.

c. Directive 2011/65/EU. Restriction of Hazardous Substances (RoHS) compliant.

d. Light source color consistency by utilizing a binning tolerance within a 4-step McAdam ellipse.

2.4 LED DRIVERS

NEMA SSL 1, UL 1310. Provide LED Drivers that are electronic, UL Class 1 or Class 2, constant-current type and meet the following requirements:

a. The combined LED driver and LED light source system is greater than or equal to the minimum luminaire efficacy values as listed in the luminaire schedule provided.

b. Operate at a voltage of 120 volts at 50/60 hertz, with input voltage fluctuations of plus or minus 10 percent.

c. Power Factor (PF) greater than or equal to 0.90 at full input power and across specified dimming range.

d. Maximum Total Harmonic Distortion (THD) less than or equal to 20 percent at full input power and across specified dimming range.

e. Operates for at least 50,000 hours at maximum case temperature and 90 percent non-condensing relative humidity.

f. Meets the "Elevated" (10kV/10kA) requirements per IEEE C62.41.2 -2002. Manufacturer must indicate whether failure of the electrical immunity system can possibly result in disconnect of power to luminaire. Provide surge protection that is integral to the LED driver.

g. Contains integral thermal protection that reduces the output power to protect the driver and light source from damage if the case temperature approaches or exceeds the driver's maximum operating temperature.

h. Complies with the requirements of the Federal Communications Commission (FCC) rules and regulations, Title 47 CFR part 15, Non-Consumer (Class A) for EMI/RFI (conducted and radiated).

i. Class A sound rating for all drivers mounted under a covered structure, such as a canopy, or where otherwise appropriate.

j. Directive 2011/65/EU. Restriction of Hazardous Substances (RoHS) compliant.

k. UL listed for wet locations typical of exterior installations.

l. Non-dimmable.

m. Rated to operate between ambient temperatures of minus 22 degrees F and 104 degrees F.

2.5 LIGHTING CONTROLS

2.5.1 Devices

2.5.1.1 Photosensors

UL 773, UL 773A. Provide Photosensors that meet the following requirements:

a. Hermetically sealed, silicon diode light sensor type, rated at 150 watts, 120 volts, 50/60 Hz with single-pole, single-throw contacts.

b. Turns ON at 1 to 3 footcandles and turns OFF at 3 to 15 footcandles.

c. Designed to fail to the ON position.

d. Housing is constructed of UV stabilized polypropylene, rated to operate within a temperature range of minus 40 to 158 degrees F.

e. Time delay that prevents accidental switching from transient light sources.

f. Directional lens in front of the cell to prevent fixed light sources from creating a turnoff condition.

g. Designed for 20-year service to match life expectancy of long-life LED fixtures and exceed 15,000 operations at full load. Provide photosensors with zero-cross technology to withstand severe in-rush current and extend relay life.

j. Provide photosensors with metal oxide varistor (MOV) type surge protection.

2.6 POLES

ASCE 7-16. Provide round tapered poles designed for wind loading of 118 miles per hour while supporting luminaires and all other appurtenances indicated. The effective projected areas (EPA) of luminaires and appurtenances used in calculations must be specific for the actual products provided on each pole. Provide poles that are anchor-base type designed for use with underground supply conductors. Poles must have oval-shaped hand hole having a minimum clear opening of 3 by 5 inches. Secure hand hole covers by stainless steel captive screws. Provide metal poles with an internal grounding connection accessible from the hand hole near the bottom of each pole. Install a means of wire disconnection accessible from the hand hole. Do not install square poles. Provide poles from a Manufacturer with a standard provision for protecting the finish during shipment and installation. Do not install scratched, stained, chipped, or dented poles.

2.6.1 Aluminum Poles

Provide aluminum poles with anodized finish unless otherwise noted in luminaire schedule on project plans. Do not paint aluminum poles. Provide poles that meet the following requirements:

a. AASHTO LTS. Manufactured of corrosion resistant aluminum alloys for Alloy 6063-T6 or Alloy 6005-T5 for wrought alloys and Alloy 356-T4

(3,5) for cast alloys.

b. Seamless extruded or spun seamless-type with minimum 0.188 inch wall thickness.

c. Top of shaft is fitted with a round or tapered cover.

d. ASTM B108/B108M. Pole base is mounted by anchor bolts, made of cast 356-T6 aluminum alloy. Base must be machined to receive the lower end of shaft.

e. Joint between shaft and base is welded.

f. ASTM B108/B108M. Base cover is cast 356-T6 aluminum alloy.

g. All hardware other than anchor bolts are either 2024-T4 anodized aluminum alloy or stainless steel.

h. Grounding connection is designed to prevent electrolysis when used with copper ground wire.

2.6.2 Brackets and Supports

ANSI C136.3, ANSI C136.13, and ANSI C136.21. Provide pole brackets that are not less than 1 1/4 inch aluminum secured to pole. Slip-fitter or pipe-threaded brackets may be used, but brackets must be coordinated to luminaires provided, and brackets for use with one type of luminaire must be identical. Brackets for pole-mounted street lights must correctly position luminaire no lower than mounting height indicated. Mount brackets not less than 24 feet above street. Provide special mountings or brackets as indicated and of metal which will not promote galvanic reaction with luminaire head.

2.6.3 Pole Foundations

Provide stainless steel anchor bolts sized according to drawings.

2.7 EQUIPMENT IDENTIFICATION

2.7.1 Manufacturer's Nameplate

Each item of equipment must have a nameplate bearing the manufacturer's name, address, model number, and serial number securely affixed in a conspicuous place; the nameplate of the distributing agent will not be acceptable.

2.7.2 Labels

UL 1598. Luminaires must be clearly marked for operation of specific light sources and drivers according to proper light source type. Note the following luminaire characteristics in the format "Use Only _____":

a. Correlated color temperature (CCT) and color rendering index (CRI) for all luminaires.

Markings related to light source type must be clear and located to be readily visible to service personnel, but unseen from normal viewing

angles when light sources are in place.

2.8 FACTORY APPLIED FINISH

NEMA 250. Provide all luminaires and lighting equipment with factory-applied painting system that as a minimum meets requirements of corrosion-resistance testing.

PART 3 EXECUTION

3.1 INSTALLATION

3.1.1 Luminaires

Install all luminaires in accordance with the luminaire manufacturer's written instructions. Install all luminaires at locations and heights as indicated on the project plans. Level all luminaires in accordance to manufacturer's written instructions.

3.1.2 LED Drivers

Provide LED drivers integral to luminaire as constructed by the manufacturer.

3.1.3 Aluminum Poles

Provide stainless steel anchor bolts, threaded at the top end and embedded at least 8 inches into existing concrete pier. Provide with square anchor base for securing and leveling of pole. Provide ornamental covers to match pole and galvanized nuts and washers for anchor bolts. Adjust poles as necessary to provide a permanent vertical position with the bracket arm in proper position for luminaire location. Install according to pole manufacturer's instructions. Alterations to poles after fabrication will void manufacturer's warranty and is not allowed.

3.1.4 Lighting Controls

3.1.4.1 Photosensors

Aim photosensor according to manufacturer's recommendations. Mount sensor on each luminaire when switch is provided in cast weatherproof aluminum housing with swivel arm. Set adjustable window slide for 1 footcandles photosensor turn-on.

3.1.4.2 Motion Sensors

Locate sensors in accordance with the manufacturer's recommendation. Locate sensors to achieve coverage of areas as indicated on project plans. Coverage patterns must be derated as recommended by manufacturer based on mounting height of sensor and any obstructions such as trees. Do not use gross rated coverage in manufacturer's product literature.

3.1.5 Grounding

Ground noncurrent-carrying parts of equipment including metal poles, luminaires, mounting arms, brackets, and metallic enclosures as specified in Section 33 71 02 UNDERGROUND ELECTRICAL DISTRIBUTION. Where copper grounding conductor is connected to a metal other than copper, provide

specially treated or lined connectors suitable for this purpose.

3.2 FIELD QUALITY CONTROL

3.2.1 Tests

Upon completion of installation, verify that equipment is properly installed, connected, and adjusted. Perform initial operational test, consisting of the entire system energized for 72 consecutive hours without any failures of any kind occurring in the system. All circuits must test clear of faults, grounds, and open circuits.

3.2.1.1 Lighting Control Verification Test

Verify lighting control system and devices operate. Verification tests are to be completed after commissioning.

-- End of Section --

SECTION 27 10 00

BUILDING TELECOMMUNICATIONS CABLING SYSTEM

PART 1 GENERAL

1.1 REFERENCES

The publications listed below form a part of this specification to the extent referenced. The publications are referred to within the text by the basic designation only.

ASTM INTERNATIONAL (ASTM)

ASTM D709	(2017) Standard Specification for Laminated Thermosetting Materials

ELECTRONIC COMPONENTS INDUSTRY ASSOCIATION (ECIA)

ECIA EIA/ECA 310-E	(2005) Cabinets, Racks, Panels, and Associated Equipment

INSTITUTE OF ELECTRICAL AND ELECTRONICS ENGINEERS (IEEE)

IEEE 100	(2000; Archived) The Authoritative Dictionary of IEEE Standards Terms

INSULATED CABLE ENGINEERS ASSOCIATION (ICEA)

ICEA S-83-596	(2016) Indoor Optical Fiber Cables
ICEA S-90-661	(2021) Category 3 and 5E Individually Unshielded Twisted Pairs, Indoor Cables (With or Without an Overall Shield) for Use in General Purpose and LAN Communications Wiring Systems

NATIONAL ELECTRICAL CONTRACTORS ASSOCIATION (NECA)

NECA/BICSI 568	(2006) Standard for Installing Building Telecommunications Cabling

NATIONAL ELECTRICAL MANUFACTURERS ASSOCIATION (NEMA)

ANSI/NEMA WC 66	(2019) Performance Standard for Category 6 and Category 7 100 Ohm Shielded and Unshielded Twisted Pairs

NATIONAL FIRE PROTECTION ASSOCIATION (NFPA)

NFPA 70	(2020; ERTA 20-1 2020; ERTA 20-2 2020; TIA 20-1; TIA 20-2; TIA 20-3; TIA 20-4) National Electrical Code

TELECOMMUNICATIONS INDUSTRY ASSOCIATION (TIA)

TIA-455-21	(1988a; R 2012) FOTP-21 - Mating

	Durability of Fiber Optic Interconnecting Devices
TIA-526-7	(2015a) OFSTP-7 Measurement of Optical Power Loss of Installed Single-Mode Fiber Cable Plant
TIA-526-14	(2015c) OFSTP-14A Optical Power Loss Measurements of Installed Multimode Fiber Cable Plant
TIA-568.0	(2020e) Generic Telecommunications Cabling for Customer Premises
TIA-568.1	(2020e) Commercial Building Telecommunications Infrastructure Standard
TIA-568.2	(2018d) Balanced Twisted-Pair Telecommunications Cabling and Components Standards
TIA-568.3	(2016d; Add 1 2019) Optical Fiber Cabling Components Standard
TIA-569	(2019e) Telecommunications Pathways and Spaces
TIA-606	(2021d) Administration Standard for Telecommunications Infrastructure
TIA-607	(2019d) Generic Telecommunications Bonding and Grounding (Earthing) for Customer Premises
TIA-1152	(2016; R 2021) Requirements for Field Test Instruments and Measurements for Balanced Twisted-Pair Cabling
TIA/EIA-604-10	(2002a) FOCIS 10 Fiber Optic Connector Intermateability Standard - Type LC

U.S. FEDERAL COMMUNICATIONS COMMISSION (FCC)

FCC Part 68	Connection of Terminal Equipment to the Telephone Network (47 CFR 68)

UNDERWRITERS LABORATORIES (UL)

UL 50	(2015) UL Standard for Safety Enclosures for Electrical Equipment, Non-Environmental Considerations
UL 444	(2017; Reprint Jun 2021) UL Standard for Safety Communications Cables
UL 467	(2013; Reprint Jun 2017) UL Standard for Safety Grounding and Bonding Equipment
UL 969	(2017; Reprint Mar 2018) UL Standard for

	Safety Marking and Labeling Systems
UL 1863	(2004; Reprint Oct 2019) UL Standard for Safety Communication Circuit Accessories

1.2 RELATED REQUIREMENTS

Section 26 20 00 INTERIOR DISTRIBUTION SYSTEM and Section 33 82 00 TELECOMMUNICATIONS, OUTSIDE PLANT (OSP), apply to this section with additions and modifications specified herein.

1.3 DEFINITIONS

Unless otherwise specified or indicated, electrical and electronics terms used in this specification shall be as defined in TIA-568.1, TIA-568.2, TIA-568.3, TIA-569, TIA-606 and IEEE 100 and herein.

1.3.1 Campus Distributor (CD)

A distributor from which the campus backbone cabling emanates. (International expression for main cross-connect (MC).)

1.3.2 Building Distributor (BD)

A distributor in which the building backbone cables terminate and at which connections to the campus backbone cables may be made. (International expression for intermediate cross-connect (IC).)

1.3.3 Floor Distributor (FD)

A distributor used to connect horizontal cable and cabling subsystems or equipment. (International expression for horizontal cross-connect (HC).)

1.3.4 Entrance Facility (EF) (Telecommunications)

An entrance to the building for both private and public network service cables (including wireless) including the entrance point at the building wall and continuing to the equipment room.

1.3.5 Open Cable

Cabling that is not run in a raceway as defined by NFPA 70. This refers to cabling that is "open" to the space in which the cable has been installed and is therefore exposed to the environmental conditions associated with that space.

1.3.6 Pathway

A physical infrastructure utilized for the placement and routing of telecommunications cable.

1.4 SYSTEM DESCRIPTION

The building telecommunications cabling and pathway system shall include permanently installed backbone cabling, pathways, service entrance facilities, conduit, raceway, and hardware for splicing, terminating, and interconnecting cabling necessary to transport telephone and data (including LAN) between equipment items in a building. The backbone cabling and pathway system includes intrabuilding and interbuilding

interconnecting cabling, pathway, and terminal hardware. The intrabuilding backbone provides connectivity from the floor distributors to the building distributors or to the campus distributor and from the building distributors to the campus distributor as required. The backbone system shall be wired in a star topology with the campus distributor at the center or hub of the star. The interbuilding backbone system provides connectivity between the campus distributors and is specified in Section 33 82 00 TELECOMMUNICATIONS OUTSIDE PLANT (OSP). Provide telecommunications pathway systems referenced herein as specified in Section 26 20 00 INTERIOR DISTRIBUTION SYSTEM.

1.5 SUBMITTALS

Government approval is required for submittals with a "G" or "S" classification. Submittals not having a "G" or "S" classification are for Contractor Quality Control approval. Submit the following in accordance with Section 01 33 00 SUBMITTAL PROCEDURES:

SD-02 Shop Drawings

Telecommunications Drawings; G

Telecommunications Space Drawings; G

In addition to Section 01 33 00 SUBMITTAL PROCEDURES, provide shop drawings in accordance with paragraph SHOP DRAWINGS.

SD-03 Product Data

Telecommunications Cabling; G

Patch Panels; G

Equipment Support Frame; G

Connector Blocks; G

Building protector assemblies; G

Protector modules; G

IT Distribution Box; G

Shore Tie Receptacle Enclosure; G
Submittals shall include the manufacturer's name, trade name, place of manufacture, and catalog model or number. Include performance and characteristic curves. Submittals shall also include applicable federal, military, industry, and technical society publication references. Should manufacturer's data require supplemental information for clarification, the supplemental information shall be submitted as specified in paragraph REGULATORY REQUIREMENTS and as required in Section 01 33 00 SUBMITTAL PROCEDURES.

SD-06 Test Reports

Telecommunications Cabling Testing; G

SD-07 Certificates

Telecommunications Contractor Qualifications; G

Key Personnel Qualifications; G

Manufacturer Qualifications; G

Test Plan; G

SD-08 Manufacturer's Instructions

Building protector assembly installation; G

SD-09 Manufacturer's Field Reports

Factory Reel Tests; G

SD-10 Operation and Maintenance Data

Telecommunications Cabling and Pathway System Data Package 5; G

SD-11 Closeout Submittals

Record Documentation; G

1.6 QUALITY ASSURANCE

1.6.1 Shop Drawings

In exception to Section 01 33 00 SUBMITTAL PROCEDURES, submitted plan drawings shall be a minimum of 11 by 17 inches in size using a minimum scale of 1/8 inch per foot. Include wiring diagrams and installation details of equipment indicating proposed location, layout and arrangement, control panels, accessories, piping, ductwork, and other items that must be shown to ensure a coordinated installation. Wiring diagrams shall identify circuit terminals and indicate the internal wiring for each item of equipment and the interconnection between each item of equipment. Drawings shall indicate adequate clearance for operation, maintenance, and replacement of operating equipment devices. Submittals shall include the nameplate data, size, and capacity. Submittals shall also include applicable federal, military, industry, and technical society publication references.

1.6.1.1 Telecommunications Drawings

Provide registered communications distribution designer (RCDD) approved, drawings in accordance with TIA-606. The identifier for each termination and cable shall appear on the drawings. Drawings shall depict final telecommunications installed wiring system infrastructure in accordance with TIA-606. The drawings should provide details required to prove that the distribution system shall properly support connectivity from the EF telecommunications and ER telecommunications, CD's, BD's, and FD's to the telecommunications work area outlets. The following drawings shall be provided as a minimum:

a. T1 - Layout of complete building per floor - Building Area/Serving Zone Boundaries, Backbone Systems, and Horizontal Pathways. Layout of complete building per floor. The drawing indicates location of

building areas, serving zones, vertical backbone diagrams, telecommunications rooms, access points, pathways, grounding system, and other systems that need to be viewed from the complete building perspective.

b. T2 - Serving Zones/Building Area Drawings - Drop Locations and Cable Identification (ID'S). Shows a building area or serving zone. These drawings show drop locations, telecommunications rooms, access points and detail call outs for common equipment rooms and other congested areas.

c. T4 - Typical Detail Drawings - Faceplate Labeling, Firestopping, Americans with Disabilities Act (ADA), Safety, Department of Transportation (DOT). Detailed drawings of symbols and typicals such as faceplate labeling, faceplate types, faceplate population installation procedures, detail racking, and raceways.

1.6.1.2 Telecommunications Space Drawings

Provide T3 drawings in accordance with TIA-606 that include telecommunications rooms plan views, pathway layout (cable tray, racks, ladder-racks, etc.), mechanical/electrical layout, and cabinet wall elevations. Drawings shall show layout of applicable equipment including incoming cable stub or connector blocks, building protector assembly, outgoing cable connector blocks, patch panels and equipment spaces and cabinet/racks. Drawings shall include a complete list of equipment and material, equipment rack details, proposed layout and anchorage of equipment and appurtenances, and equipment relationship to other parts of the work including clearance for maintenance and operation. Drawings may also be an enlargement of a congested area of T1 or T2 drawings.

1.6.2 Telecommunications Qualifications

Work under this section shall be performed by and the equipment shall be provided by the approved telecommunications contractor and key personnel. Qualifications shall be provided for: the telecommunications system contractor, the telecommunications system installer, and the supervisor (if different from the installer). A minimum of 30 days prior to installation, submit documentation of the experience of the telecommunications contractor and of the key personnel.

1.6.2.1 Telecommunications Contractor

The telecommunications contractor shall be a firm which is regularly and professionally engaged in the business of the applications, installation, and testing of the specified telecommunications systems and equipment. The telecommunications contractor shall demonstrate experience in providing successful telecommunications systems within the past 3 years of similar scope and size. Submit documentation for a minimum of three and a maximum of five successful telecommunication system installations for the telecommunications contractor.

1.6.2.2 Key Personnel

Provide key personnel who are regularly and professionally engaged in the business of the application, installation and testing of the specified telecommunications systems and equipment. There may be one key person or more key persons proposed for this solicitation depending upon how many of the key roles each has successfully provided. Each of the key personnel

shall demonstrate experience in providing successful telecommunications systems within the past 3 years.

Supervisors and installers assigned to the installation of this system or any of its components shall be Building Industry Consulting Services International (BICSI) Registered Cabling Installers, Technician Level. Submit documentation of current BICSI certification for each of the key personnel.

In lieu of BICSI certification, supervisors and installers assigned to the installation of this system or any of its components shall have a minimum of 3 years experience in the installation of the specified copper and fiber optic cable and components. They shall have factory or factory approved certification from each equipment manufacturer indicating that they are qualified to install and test the provided products. Submit documentation for a minimum of three and a maximum of five successful telecommunication system installations for each of the key personnel. Documentation for each key person shall include at least two successful system installations provided that are equivalent in system size and in construction complexity to the telecommunications system proposed for this solicitation. Include specific experience in installing and testing telecommunications systems and provide the names and locations of at least two project installations successfully completed using optical fiber and copper telecommunications cabling systems. All of the existing telecommunications system installations offered by the key persons as successful experience shall have been in successful full-time service for at least 18 months prior to the issuance date for this solicitation. Provide the name and role of the key person, the title, location, and completed installation date of the referenced project, the referenced project owner point of contact information including name, organization, title, and telephone number, and generally, the referenced project description including system size and construction complexity.

Indicate that all key persons are currently employed by the telecommunications contractor, or have a commitment to the telecommunications contractor to work on this project. All key persons shall be employed by the telecommunications contractor at the date of issuance of this solicitation, or if not, have a commitment to the telecommunications contractor to work on this project by the date that the bid was due to the Contracting Officer.

Note that only the key personnel approved by the Contracting Officer in the successful proposal shall do work on this solicitation's telecommunications system. Key personnel shall function in the same roles in this contract, as they functioned in the offered successful experience. Any substitutions for the telecommunications contractor's key personnel requires approval from The Contracting Officer.

1.6.2.3 Minimum Manufacturer Qualifications

Cabling, equipment and hardware manufacturers shall have a minimum of 3 years experience in the manufacturing, assembly, and factory testing of components which comply with TIA-568.1, TIA-568.2 and TIA-568.3.

1.6.3 Test Plan

Provide a complete and detailed test plan for the telecommunications cabling system including a complete list of test equipment for the components and accessories for each cable type specified, 60 days prior to

the proposed test date. Include procedures for certification, validation, and testing.

1.6.4 Regulatory Requirements

In each of the publications referred to herein, consider the advisory provisions to be mandatory, as though the word, "shall" had been substituted for "should" wherever it appears. Interpret references in these publications to the "authority having jurisdiction," or words of similar meaning, to mean the Contracting Officer. Equipment, materials, installation, and workmanship shall be in accordance with the mandatory and advisory provisions of NFPA 70 unless more stringent requirements are specified or indicated.

1.6.5 Standard Products

Provide materials and equipment that are products of manufacturers regularly engaged in the production of such products which are of equal material, design and workmanship. Products shall have been in satisfactory commercial or industrial use for 2 years prior to bid opening. The 2-year period shall include applications of equipment and materials under similar circumstances and of similar size. The product shall have been on sale on the commercial market through advertisements, manufacturers' catalogs, or brochures during the 2-year period. Where two or more items of the same class of equipment are required, these items shall be products of a single manufacturer; however, the component parts of the item need not be the products of the same manufacturer unless stated in this section.

1.6.5.1 Alternative Qualifications

Products having less than a 2-year field service record will be acceptable if a certified record of satisfactory field operation for not less than 6000 hours, exclusive of the manufacturers' factory or laboratory tests, is furnished.

1.6.5.2 Material and Equipment Manufacturing Date

Products manufactured more than 1 year prior to date of delivery to site shall not be used, unless specified otherwise.

1.7 DELIVERY AND STORAGE

Provide protection from weather, moisture, extreme heat and cold, dirt, dust, and other contaminants for telecommunications cabling and equipment placed in storage.

1.8 ENVIRONMENTAL REQUIREMENTS

Connecting hardware shall be rated for operation under ambient conditions of32 to 140 degrees F and in the range of 0 to 95 percent relative humidity, noncondensing.

1.9 WARRANTY

The equipment items shall be supported by service organizations which are reasonably convenient to the equipment installation in order to render satisfactory service to the equipment on a regular and emergency basis during the warranty period of the contract.

1.10 MAINTENANCE

1.10.1 Operation and Maintenance Manuals

Commercial off the shelf manuals shall be furnished for operation, installation, configuration, and maintenance of products provided as a part of the telecommunications cabling and pathway system, Data Package 5. Submit operations and maintenance data in accordance with Section 01 78 23 OPERATION AND MAINTENANCE DATA and as specified herein. In addition to requirements of Data Package 5, include the requirements of paragraphs TELECOMMUNICATIONS DRAWINGS, TELECOMMUNICATIONS SPACE DRAWINGS, and RECORD DOCUMENTATION. Ensure that these drawings and documents depict the as-built configuration.

1.10.2 Record Documentation

Provide T5 drawings including documentation on cables and termination hardware in accordance with TIA-606. T5 drawings shall include schedules to show information for cut-overs and cable plant management, patch panel layouts and cover plate assignments, cross-connect information and connecting terminal layout as a minimum. T5 drawings shall be provided in hard copy format Provide the following T5 drawing documentation as a minimum:

a. Cables - A record of installed cable shall be provided in accordance with TIA-606. The cable records shall include only the required data fieldsin accordance with TIA-606. Include manufacture date of cable with submittal.

b. Termination Hardware - A record of installed patch panels, cross-connect points, distribution frames, terminating block arrangements and type, and outlets shall be provided in accordance with TIA-606. Documentation shall include the required data fields as a minimum in accordance with TIA-606.

PART 2 PRODUCTS

2.1 COMPONENTS

Components shall be UL or third party certified. Where equipment or materials are specified to conform to industry and technical society reference standards of the organizations, submit proof of such compliance. The label or listing by the specified organization will be acceptable evidence of compliance. In lieu of the label or listing, submit a certificate from an independent testing organization, competent to perform testing, and approved by the Contracting Officer. The certificate shall state that the item has been tested in accordance with the specified organization's test methods and that the item complies with the specified organization's reference standard. Provide a complete system of telecommunications cabling and pathway components using star topology. Provide support structures and pathways, complete with outlets, cables, connecting hardware and telecommunications cabinets/racks. Cabling and interconnecting hardware and components for telecommunications systems shall be UL listed or third party independent testing laboratory certified, and shall comply with NFPA 70 and conform to the requirements specified herein.

2.2 TELECOMMUNICATIONS PATHWAY

Provide telecommunications pathways in accordance with TIA-569 and as specified in Section 26 20 00 INTERIOR DISTRIBUTION SYSTEM.

2.3 TELECOMMUNICATIONS CABLING

Cabling shall be UL listed for the application and shall comply with TIA-568.0, TIA-568.1, TIA-568.2, TIA-568.3 and NFPA 70. Provide a labeling system for cabling as required by TIA-606 and UL 969. Ship cable on reels or in boxes bearing manufacture date for for unshielded twisted pair (UTP) in accordance with ICEA S-90-661 and optical fiber cables in accordance with ICEA S-83-596 for all cable used on this project. Cabling manufactured more than 12 months prior to date of installation shall not be used.

2.3.1 Backbone Cabling

2.3.1.1 Backbone Copper

Copper backbone cable shall be solid conductor, 24 AWG, 100 ohm, 25-pair, Category 3 5E, UTP, in accordance with ICEA S-90-661, TIA-568.1, TIA-568.2 and UL 444, formed into 25 pair binder groups covered with a gray thermoplastic jacket and overall metallic shield. Cable shall be imprinted with manufacturers name or identifier, flammability rating, gauge of conductor, transmission performance rating (category designation) at regular length marking intervals in accordance with ICEA S-90-661. Provide plenum (CMP), riser (CMR), or general purpose (CM or CMG)communications rated cabling in accordance with NFPA 70. Substitution of a higher rated cable shall be permitted in accordance with NFPA 70.

2.3.2 Horizontal Cabling

Provide horizontal cable in compliance with NFPA 70 and performance characteristics in accordance with TIA-568.1.

2.3.2.1 Horizontal Copper

Provide horizontal copper cable, UTP, 100 ohm in accordance with TIA-568.2, UL 444, ANSI/NEMA WC 66, ICEA S-90-661 . Provide four each individually twisted pair, minimum size 24 AWG conductors, Category 6, with a blue thermoplastic jacket. Cable shall be imprinted with manufacturers name or identifier, flammability rating, gauge of conductor, transmission performance rating (category designation) and length marking at regular intervals in accordance with ICEA S-90-661. Provide plenum (CMP), riser (CMR), or general purpose (CM or CMG) communications rated cabling in accordance with NFPA 70. Substitution of a higher rated cable shall be permitted in accordance with NFPA 70. Cables installed in conduit within and under slabs shall be UL listed and labeled for wet locations in accordance with NFPA 70.

2.4 TELECOMMUNICATIONS SPACES

Provide connecting hardware and termination equipment in the telecommunications entrance facility to facilitate installation as shown on design drawings for terminating and cross-connecting permanent cabling. Provide telecommunications interconnecting hardware color coding in accordance with TIA-606.

2.4.1 Backboards

Provide void-free, interior grade A-C plywood 3/4 inch thick as indicated. Backboards shall be fire rated by manufacturing process. Fire stamp shall be clearly visible.

2.4.2 Equipment Support Frame

Provide in accordance with ECIA EIA/ECA 310-E and UL 50.

a. Cabinets, wall-mounted modular type, 16 gauge steel or 11 gauge aluminum construction, minimum, treated to resist corrosion. Cabinet shall have have lockable front door, louvered side panels, 250 CFM roof mounted fan, ground lug, and top and bottom cable access. Cabinet shall be compatible with 19 inches panel mounting. A surge protected power strip with 6 duplex 20 amp receptacles shall be provided within the cabinet.

2.4.3 Connector Blocks

Provide insulation displacement connector (IDC) Type 110 for Category 6 systems. Provide blocks for the number of horizontal and backbone cables terminated on the block plus 25 percent spare.

2.4.4 Patch Panels

Provide ports for the number of horizontal and backbone cables terminated on the panel plus 25 percent spare. Provide pre-connectorized optical fiber and copper patch cords for patch panels. Provide patch cords, as complete assemblies, with matching connectors as specified. Provide fiber optic patch cables with crossover orientation in accordance with TIA-568.3. Patch cords shall meet minimum performance requirements specified in TIA-568.1, TIA-568.2 and TIA-568.3 for cables, cable length and hardware specified.

2.4.4.1 Modular to 110 Block Patch Panel

Provide in accordance with TIA-568.1 and TIA-568.2. Panels shall be third party verified and shall comply with EIA/TIA Category 6 requirements. Panel shall be constructed of 0.09 inches minimum aluminum and shall be cabinet mounted and compatible with an ECIA EIA/ECA 310-E 19 inches equipment cabinet. Panel shall provide 48 non-keyed, 8-pin modular ports, wired to T568A. Patch panels shall terminate the building cabling on Type 110 IDCs and shall utilize a printed circuit board interface. The rear of each panel shall have incoming cable strain-relief and routing guides. Panels shall have each port factory numbered and be equipped with laminated plastic nameplates above each port.

2.4.4.2 Fiber Optic Patch Panel

Provide panel for maintenance and cross-connecting of optical fiber cables. Panel shall be constructed of 18 gauge steel or 11 gauge aluminum minimum and shall be cabinet mounted and compatible with a ECIA EIA/ECA 310-E 19 inches equipment rack. Each panel shall provide 12 multimode adapters as duplex LC in accordance with TIA/EIA-604-10 with zirconia ceramic alignment sleeves, alignment sleeves. Provide dust cover for unused adapters. The rear of each panel shall have a cable management tray a minimum of 8 inches deep with removable cover, incoming cable strain-relief and routing guides. Panels shall have each adapter factory

numbered and be equipped with laminated plastic nameplates above each adapter.

2.5 TELECOMMUNICATIONS OUTLET/CONNECTOR ASSEMBLIES

2.5.1 Outlet/Connector Copper

Outlet/connectors shall comply with FCC Part 68, TIA-568.1, and TIA-568.2. UTP outlet/connectors shall be UL 1863 listed, non-keyed, 8-pin modular, constructed of high impact rated thermoplastic housing and shall be third party verified and shall comply with TIA-568.2 Category 6 requirements. Outlet/connectors provided for UTP cabling shall meet or exceed the requirements for the cable provided. Outlet/connectors shall be terminated using a Type 110 IDC PC board connector, color-coded for both T568A and T568B wiring. Each outlet/connector shall be wired T568A. UTP outlet/connectors shall comply with TIA-568.2 for 200 mating cycles. UTP outlet/connectors installed in outdoor or marine environments shall be jell-filled type containing an anti-corrosive, memory retaining compound.

2.5.2 Optical Fiber Adapters(Couplers)

Provide optical fiber adapters suitable for duplex LC in accordance with TIA/EIA-604-10 with zirconia ceramic alignment sleeves, as indicated. Provide dust cover for adapters. Optical fiber adapters shall comply with TIA-455-21 for 500 mating cycles.

2.5.3 Optical Fiber Connectors

Provide in accordance with TIA-455-21. Optical fiber connectors shall be duplex LC in accordance with TIA/EIA-604-10 with zirconia ceramic alignment sleeves, ferrule, epoxyless compatible with 50/125 multimode fiber. The connectors shall provide a maximum attenuation of 0.3 dB at 1300 nm with less than a 0.2 dB change after 500 mating cycles.

2.6 TERMINAL CABINETS

Construct of zinc-coated sheet steel,as indicated. Trim shall be fitted with hinged door and locking latch. Doors shall be maximum size openings to box interiors. Boxes shall be provided with 5/8 inch backboard with two-coat varnish finish. Match trim, hardware, doors, and finishes with panelboards. Provide label and identification systems for telecommunications wiring and components consistent with TIA-606.

2.7 TELECOMMUNICATIONS ENTRANCE FACILITY

2.7.1 Building Protector Assemblies

Provide self-contained 5-pin unit supplied with a field calbe stub factory connected to protector socket blocks to terminate and accept protector modules for 25 pairs of outside cable. Building protector assembly shall have interconnecting hardware for connection to interior cabling at full capacity. Provide manufacturer's instructions for building protector assembly installation.

2.7.2 Protector Modules

Provide in accordance with UL 497. The gas modules shall shunt high voltage to ground, fail short, and be equipped with an external spark gap and heat coils in accordance in UL 497. Provide gas tube 5-pin type rated

for the application. Provide gas tube protection modules in accordance with RUS Bull 345-83 and shall be maximum duty, A>20kA, B>1000, C200A where A is the maximum single impulse discharge current, B is the impulse life and C is the AC discharge current in accordance with ANSI C62.61. Provide the number of surge protection modules equal to the number of terminals on BET.

2.7.3 CONDUIT

Provide conduit as specified in Section 33 71 02 UNDERGROUND ELECTRICAL DISTRIBUTION.

2.8 GROUNDING AND BONDING PRODUCTS

Provide in accordance with UL 467, TIA-607, and NFPA 70. Components shall be identified as required by TIA-606. Provide ground rods, bonding conductors, and grounding busbars as specified in Section 26 20 00 INTERIOR DISTRIBUTION SYSTEM.

2.9 MANUFACTURER'S NAMEPLATE

Each item of equipment shall have a nameplate bearing the manufacturer's name, address, model number, and serial number securely affixed in a conspicuous place; the nameplate of the distributing agent will not be acceptable.

2.10 FIELD FABRICATED NAMEPLATES

ASTM D709. Provide laminated plastic nameplates for each equipment enclosure, relay, switch, and device; as specified or as indicated on the drawings. Each nameplate inscription shall identify the function and, when applicable, the position. Nameplates shall be melamine plastic, 0.125 inches thick, white with black center core. Surface shall be matte finish. Corners shall be square. Accurately align lettering and engrave into the core. Minimum size of nameplates shall be one by 2.5 inches. Lettering shall be a minimum of 0.25 inches high normal block style.

2.11 TESTS, INSPECTIONS, AND VERIFICATIONS

2.11.1 Factory Reel Tests

Provide documentation of the testing and verification actions taken by manufacturer to confirm compliance with TIA-568.1, TIA-568.2, TIA-568.3, TIA-526-7 for single mode optical fiber cables.

PART 3 EXECUTION

3.1 INSTALLATION

Install telecommunications cabling and pathway systems, including the horizontal and backbone cable, pathway systems, telecommunications outlet/connector assemblies, and associated hardware in accordance with NECA/BICSI 568, TIA-568.1, TIA-568.2, TIA-568.3, TIA-569, NFPA 70, and UL standards as applicable. Provide cabling in a star topology network. Pathways and outlet boxes shall be installed as specified in Section 26 20 00 INTERIOR DISTRIBUTION SYSTEM. Install telecommunications cabling with copper media in accordance with the following criteria to avoid potential electromagnetic interference between power and telecommunications equipment. The interference ceiling shall not exceed

3.0 volts per meter measured over the usable bandwidth of the telecommunications cabling.

3.1.1 Cabling

Install UTP, and optical fiber telecommunications cabling system as detailed in TIA-568.1, TIA-568.2, and TIA-568.3. Screw terminals shall not be used except where specifically indicated on plans. Use an approved insulation displacement connection (IDC) tool kit for copper cable terminations. Do not exceed manufacturers' cable pull tensions for copper and optical fiber cables. Provide a device to monitor cable pull tensions. Do not exceed 25 pounds pull tension for four pair copper cables. Do not chafe or damage outer jacket materials. Use only lubricants approved by cable manufacturer. Do not over cinch cables, or crush cables with staples. For UTP cable, bend radii shall not be less than four times the cable diameter. Cables shall be terminated; no cable shall contain unterminated elements. Cables shall not be spliced. Label cabling in accordance with paragraph LABELING in this section.

3.1.1.1 Horizontal Cabling

Install horizontal cabling as indicated on drawings Do not untwist Category 6 UTP cables more than one half inch from the point of termination to maintain cable geometry. Provide slack cable in the form of a figure eight (not a service loop) on each end of the cable, 10 feet in the telecommunications room, and 12 inches in the work area outlet.

3.1.2 Pathway Installations

Provide in accordance with TIA-569 and NFPA 70. Provide building pathway as specified in Section 26 20 00 INTERIOR DISTRIBUTION SYSTEM.

3.1.3 Telecommunications Space Termination

Install termination hardware required for Category 6 and optical fiber system. An insulation displacement tool shall be used for terminating copper cable to insulation displacement connectors.

3.1.3.1 Connector Blocks

Connector blocks shall be cabinet mounted in orderly rows and columns. Adequate vertical and horizontal wire routing areas shall be provided between groups of blocks. Install in accordance with industry standard wire routing guides in accordance with TIA-569.

3.1.3.2 Patch Panels

Patch panels shall be mounted in equipment cabinets with sufficient ports to accommodate the installed cable plant plus 25 percent spares.

a. Copper Patch Panel. Copper cable entering a patch panel shall be secured to the panel with cable ties to prevent movement of the cable.

b. Fiber Optic Patch Panel. Fiber optic cable loop shall be provided as recommended by the manufacturer. The outer jacket of each cable entering a patch panel shall be secured to the panel to prevent movement of the fibers within the panel, using clamps or brackets specifically manufactured for that purpose.

3.1.3.3 Equipment Support Frames

Install in accordance with TIA-569:

a. Cabinets, wall-mounted modular type. Mount cabinet to plywood backboard in accordance with manufacturer's recommendations. Mount cabinet so height of highest panel does not exceed 78 inches above floor.

3.1.4 Grounding and Bonding

Provide in accordance with TIA-607, NFPA 70 and as specified in Section 26 20 00 INTERIOR DISTRIBUTION SYSTEM.

3.1.5 Surge Protection

All cables and conductors which serve as communication lines through off-premise lines, shall have surge protection installed at each end which meet the requirements of RUS Bull 1751F-815.

3.2 LABELING

3.2.1 Labels

Provide labeling in accordance with TIA-606. Handwritten labeling is unacceptable. Stenciled lettering for voice and data circuits shall be provided using thermal ink transfer process.

3.2.2 Cable

Cables shall be labeled using color labels on both ends with identifiers in accordance with TIA-606.

3.2.3 Termination Hardware

Workstation outlets and patch panel connections shall be labeled using color coded labels with identifiers in accordance with TIA-606.

3.3 FIELD FABRICATED NAMEPLATE MOUNTING

Provide number, location, and letter designation of nameplates as indicated. Fasten nameplates to the device with a minimum of two sheet-metal screws or two rivets.

3.4 TESTING

3.4.1 Telecommunications Cabling Testing

Perform telecommunications cabling inspection, verification, and performance tests in accordance with TIA-568.1, TIA-568.2, and TIA-568.3. Test equipment shall conform to TIA-1152. Perform optical fiber field inspection tests via attenuation measurements on factory reels and provide results along with manufacturer certification for factory reel tests. Remove failed cable reels from project site upon attenuation test failure.

3.4.1.1 Inspection

Visually inspect UTP and optical fiber jacket materials for UL or third party certification markings. Inspect cabling terminations in

telecommunications rooms and at workstations to confirm color code for T568A or T568B pin assignments, and inspect cabling connections to confirm compliance with TIA-568.1, TIA-568.2, and TIA-568.3. Visually confirm Category 6, marking of outlets, cover plates, outlet/connectors, and patch panels.

3.4.1.2 Verification Tests

UTP backbone copper cabling shall be tested for DC loop resistance, shorts, opens, intermittent faults, and polarity between conductors, and between conductors and shield, if cable has overall shield. Test operation of shorting bars in connection blocks. Test cables after termination but prior to being cross-connected.

For multimode optical fiber, perform optical fiber end-to-end attenuation tests in accordance with TIA-568.3 and TIA-526-14 using Method A, Optical Power Meter and Light Source for multimode optical fiber. Perform verification acceptance tests.

3.4.1.3 Final Verification Tests

Perform verification tests for UTP and optical fiber systems after the complete telecommunications cabling and workstation outlet/connectors are installed.

a. Data Tests. These tests assume the Information Technology Staff has a network installed and are available to assist with testing. Connect to the network interface device at the demarcation point. Log onto the network to ensure proper connection to the network.

-- End of Section --

SECTION 31 23 00.00 20

EXCAVATION AND FILL

PART 1 GENERAL

1.1 REFERENCES

The publications listed below form a part of this specification to the extent referenced. The publications are referred to in the text by the basic designation only.

AMERICAN WATER WORKS ASSOCIATION (AWWA)

AWWA C600	(2010) Installation of Ductile-Iron Water Mains and Their Appurtenances

ASTM INTERNATIONAL (ASTM)

ASTM C136	(2006) Standard Test Method for Sieve Analysis of Fine and Coarse Aggregates
ASTM D2321	(2014; E 2014) Standard Practice for Underground Installation of Thermoplastic Pipe for Sewers and Other Gravity-Flow Applications
ASTM D2487	(2011) Soils for Engineering Purposes (Unified Soil Classification System)
ASTM D698	(2012; E 2014; E 2015) Laboratory Compaction Characteristics of Soil Using Standard Effort (12,400 ft-lbf/cu. ft. (600 kN-m/cu. m.))

U.S. ARMY CORPS OF ENGINEERS (USACE)

EM 385-1-1	(2014) Safety and Health Requirements Manual

1.2 DEFINITIONS

1.2.1 Capillary Water Barrier

A layer of clean, poorly graded crushed rock, stone, or natural sand or gravel having a high porosity which is placed beneath a building slab with or without a vapor barrier to cut off the capillary flow of pore water to the area immediately below a slab.

1.2.2 Degree of Compaction

Degree of compaction is expressed as a percentage of the maximum density obtained by the test procedure presented in ASTM D698, for general soil types, abbreviated as percent laboratory maximum density.

1.2.3 Hard Materials

Weathered rock, dense consolidated deposits, or conglomerate materials

which are not included in the definition of "rock" but which usually require the use of heavy excavation equipment, ripper teeth, or jack hammers for removal.

1.2.4 Rock

Solid homogeneous interlocking crystalline material with firmly cemented, laminated, or foliated masses or conglomerate deposits, neither of which can be removed without systematic drilling and blasting, drilling and the use of expansion jacks or feather wedges, or the use of backhoe-mounted pneumatic hole punchers or rock breakers; also large boulders, buried masonry, or concrete other than pavement exceeding 1 cubic yard in volume. Removal of hard material will not be considered rock excavation because of intermittent drilling and blasting that is performed merely to increase production.

1.2.5 Pile Supported Structure

As used herein, a structure where both the foundation and floor slab are pile supported.

1.3 SUBMITTALS

Government approval is required for submittals with a "G" designation; submittals not having a "G" designation are for Contractor Quality Control approval. When used, a designation following the "G" designation identifies the office that will review the submittal for the Government. The following shall be submitted in accordance with Section 01 33 00 SUBMITTAL PROCEDURES:

SD-01 Preconstruction Submittals

Shoring and Sheeting Plan; G

Dewatering work plan; G

Submit 15 days prior to starting work.

SD-06 Test Reports

Borrow Site Testing; G

Fill and backfill test; G

Select material test; G

Porous fill test for capillary water barrier; G

Density tests; G

Moisture Content Tests; G

Copies of all laboratory and field test reports within 24 hours of the completion of the test.

1.4 DELIVERY, STORAGE, AND HANDLING

Perform in a manner to prevent contamination or segregation of materials.

1.5 CRITERIA FOR BIDDING

Base bids on the following criteria:

a. Surface elevations are as indicated.

b. Pipes or other artificial obstructions, except those indicated, will not be encountered.

c. Hard materials, except those indicated, will not be encountered.

d. Suitable backfill in the quantities required is not available at the project site.

e. Blasting will not be permitted. Remove material in an approved manner.

1.6 QUALITY ASSURANCE

1.6.1 Shoring and Sheeting Plan

Submit drawings and calculations, certified by a registered professional engineer, describing the methods for shoring and sheeting of excavations, including on, near, or around the quay wall. Drawings shall include material sizes and types, arrangement of members, and the sequence and method of installation and removal. Calculations shall include data and references used.

1.6.2 Dewatering Work Plan

Submit procedures for accomplishing dewatering work.

1.6.3 Utilities

Movement of construction machinery and equipment over pipes and utilities during construction shall be at the Contractor's risk. Excavation made with power-driven equipment is not permitted within two feet of known Government-owned utility or subsurface construction. For work immediately adjacent to or for excavations exposing a utility or other buried obstruction, excavate by hand. Start hand excavation on each side of the indicated obstruction and continue until the obstruction is uncovered or until clearance for the new grade is assured. Support uncovered lines or other existing work affected by the contract excavation until approval for backfill is granted by the Contracting Officer. Report damage to utility lines or subsurface construction immediately to the Contracting Officer.

PART 2 PRODUCTS

2.1 SOIL MATERIALS

2.1.1 Satisfactory Materials

Any materials classified by ASTM D2487 as GW, GP, free of debris, roots, wood, scrap material, vegetation, refuse, soft unsound particles, and deleterious, or objectionable materials. Unless specified otherwise, the maximum particle diameter shall be one-half the lift thickness at the intended location.

2.1.2 Unsatisfactory Materials

Materials which do not comply with the requirements for satisfactory materials. Unsatisfactory materials also include man-made fills, trash, refuse, or backfills from previous construction. Unsatisfactory material also includes material classified as satisfactory which contains root and other organic matter, frozen material, and stones larger than 6 inches. The Contracting Officer shall be notified of any contaminated materials.

2.1.3 Select Material

Provide materials classified as 1-1/2" crushed stone where indicated.

Sieve Size	Percent Passing by Weight
2-1/4"	100
2"	90-100
1-1/2"	30-55
1-1/4"	0-25
1"	0-5

2.2 UTILITY BEDDING MATERIAL

Except as specified otherwise in the individual piping section, provide bedding for buried piping in accordance with AWWA C600, Type 4, except as specified herein. Backfill to top of pipe shall be compacted to 95 percent of ASTM D698 maximum density. Plastic piping shall have bedding to spring line of pipe. Provide ASTM D2321 materials as follows:

a. Class I: Angular, 0.25 to 1.5 inches, graded stone, including a number of fill materials that have regional significance such as coral, slag, cinders, crushed stone, and crushed shells.

b. Class II: Coarse sands and gravels with maximum particle size of 1.5 inches, including various graded sands and gravels containing small percentages of fines, generally granular and noncohesive, either wet or dry. Soil Types GW, GP, SW, and SP are included in this class as specified in ASTM D2487.

2.2.1 Gravel

Clean, coarsely graded natural gravel, crushed stone or a combination thereof or having a classification of GW in accordance with ASTM D2487 for bedding and backfill as indicated. Maximum particle size shall not exceed 2-1/4 inches. Minimum particle size shall not be less than 1 inch.

2.3 BURIED WARNING AND IDENTIFICATION TAPE

Polyethylene plastic warning tape manufactured specifically for warning and identification of buried utility lines. Provide tape on rolls, 3 inch minimum width, color coded as specified below for the intended utility with warning and identification imprinted in bold black letters continuously over the entire tape length. Warning and identification to read, "CAUTION, BURIED (intended service) LINE BELOW" or similar wording. Color and printing shall be permanent, unaffected by moisture or soil.

Warning Tape Color Codes	
[Yellow:]	[Electric]
[Orange:]	[Telephone and Other Communications]
[Blue:]	[Water Systems]
[Green:]	[Sewer Systems]

PART 3 EXECUTION

3.1 PROTECTION

3.1.1 Shoring and Sheeting

Provide shoring bracing cribbing and sheeting, as needed. In addition to Section 25 A and B of EM 385-1-1, include provisions in the shoring and sheeting plan that will accomplish the following:

a. Prevent undermining of pavements, foundations and slabs.

b. Prevent slippage or movement in banks or slopes adjacent to the excavation.

c. Maintain stability and structural integrity of all seawalls and structures during excavation and backfilling operations. Repair any damage that occurs to the satisfaction of the Contracting Officer at no cost to the Government.

d. Prevent movement of existing utilities that area being excavated around.

3.1.2 Drainage and Dewatering

Provide for the collection and disposal of surface and subsurface water encountered during construction. Protect surfaces and excavations from both tides and storms during construction.

3.1.2.1 Drainage

So that construction operations progress successfully, completely drain construction site during periods of construction to keep soil materials sufficiently dry. The Contractor shall establish/construct storm drainage features (ponds/basins) at the earliest stages of site development, and throughout construction grade the construction area to provide positive surface water runoff away from the construction activity and/or provide temporary ditches, swales, and other drainage features and equipment as

required to maintain dry soils, prevent erosion and undermining of foundations. When unsuitable working platforms for equipment operation and unsuitable soil support for subsequent construction features develop, remove unsuitable material and provide new soil material as specified herein. It is the responsibility of the Contractor to assess the soil and ground water conditions presented by the plans and specifications and to employ necessary measures to permit construction to proceed. Excavated slopes and backfill surfaces shall be protected to prevent erosion and sloughing. Excavation shall be performed so that the site, the area immediately surrounding the site, and the area affecting operations at the site shall be continually and effectively drained.

3.1.2.2 Dewatering

Groundwater flowing toward or into excavations shall be controlled to prevent sloughing of excavation slopes and walls, boils, uplift and heave in the excavation and to eliminate interference with orderly progress of construction. French drains, sumps, ditches or trenches will not be permitted within 3 feet of the foundation of any structure, except with specific written approval, and after specific contractual provisions for restoration of the foundation area have been made. Control measures shall be taken by the time the excavation reaches the water level in order to maintain the integrity of the in situ material.

3.1.3 Underground Utilities

Location of the existing utilities indicated is approximate. The Contractor shall physically verify the location and elevation of the existing utilities indicated prior to starting construction.

3.1.4 Machinery and Equipment

Movement of construction machinery and equipment over pipes during construction shall be at the Contractor's risk. Repair, or remove and provide new pipe for existing or newly installed pipe that has been displaced or damaged.

3.2 EXCAVATION

Excavate to contours, elevation, and dimensions indicated. Reuse excavated materials that meet the specified requirements for the material type required at the intended location. Keep excavations free from water. Excavate soil disturbed or weakened by Contractor's operations, soils softened or made unsuitable for subsequent construction due to exposure to weather. Excavations below indicated depths will not be permitted except to remove unsatisfactory material. Unsatisfactory material encountered below the grades shown shall be removed. Refill with select material and compact to 95 percent of ASTM D698 maximum density. Unless specified otherwise, refill excavations cut below indicated depth with select material and compact to 95 percent of ASTM D698 maximum density. Satisfactory material removed below the depths indicated, without specific direction of the Contracting Officer, shall be replaced with satisfactory materials to the indicated excavation grade; except as specified for spread footings. Determination of elevations and measurements of approved overdepth excavation of unsatisfactory material below grades indicated shall be done under the direction of the Contracting Officer.

3.2.1 Structures With Spread Footings

Ensure that footing subgrades have been inspected and approved by the Contracting Officer prior to concrete placement. Fill over excavations with concrete during foundation placement.

3.2.2 Pipe Trenches

Excavate to the dimension indicated. Grade bottom of trenches to provide uniform support for each section of pipe after pipe bedding placement. Tamp if necessary to provide a firm pipe bed. Recesses shall be excavated to accommodate bells and joints so that pipe will be uniformly supported for the entire length. Rock, where encountered, shall be excavated to a depth of at least 6 inches below the bottom of the pipe.

3.2.3 Hard Material Excavation

Remove hard material to elevations indicated in a manner that will leave foundation material in an unshattered and solid condition. Roughen level surfaces and cut sloped surfaces into benches for bond with concrete. Protect shale from conditions causing decomposition along joints or cleavage planes and other types of erosion. Removal of hard material beyond lines and grades indicated will not be grounds for a claim for additional payment unless previously authorized by the Contracting Officer. Excavation of the material claimed as rock shall not be performed until the material has been cross sectioned by the Contractor and approved by the Contracting Officer. Common excavation shall consist of all excavation not classified as rock excavation.

3.2.4 Excavated Materials

Satisfactory excavated material required for fill or backfill shall be placed in the proper section of the permanent work required or shall be separately stockpiled if it cannot be readily placed. Satisfactory material in excess of that required for the permanent work and all unsatisfactory material shall be disposed of as specified in Paragraph "DISPOSITION OF SURPLUS MATERIAL."

3.2.5 Final Grade of Surfaces to Support Concrete

Excavation to final grade shall not be made until just before concrete is to be placed. Only excavation methods that will leave the foundation rock in a solid and unshattered condition shall be used. Approximately level surfaces shall be roughened, and sloped surfaces shall be cut as indicated into rough steps or benches to provide a satisfactory bond. Shales shall be protected from slaking and all surfaces shall be protected from erosion resulting from ponding or flow of water.

3.3 SUBGRADE PREPARATION

Unsatisfactory material in surfaces to receive fill or in excavated areas shall be removed and replaced with satisfactory materials as directed by the Contracting Officer. The surface shall be scarified to a depth of 6 inches before the fill is started. Sloped surfaces steeper than 1 vertical to 4 horizontal shall be plowed, stepped, benched, or broken up so that the fill material will bond with the existing material. When subgrades are less than the specified density, the ground surface shall be broken up to a minimum depth of 6 inches, pulverized, and compacted to the specified density. When the subgrade is part fill and part excavation or

natural ground, the excavated or natural ground portion shall be scarified to a depth of 12 inches and compacted as specified for the adjacent fill. Material shall not be placed on surfaces that are muddy, frozen, or contain frost. Compaction shall be accomplished by sheepsfoot rollers, pneumatic-tired rollers, steel-wheeled rollers, or other approved equipment well suited to the soil being compacted. Material shall be moistened or aerated as necessary. Minimum subgrade density shall be as specified herein.

3.4 SUBGRADE FILTER FABRIC

Place synthetic fiber filter fabric as indicated directly on prepared subgrade free of vegetation, stumps, rocks larger than 2 inches diameter and other debris which may puncture or otherwise damage the fabric. Repair damaged fabric by placing an additional layer of fabric to cover the damaged area a minimum of 3 feet overlap in all directions. Overlap fabric at joints a minimum of 3 feet. Obtain approval of filter fabric installation before placing fill or backfill. Place fill or backfill on fabric in the direction of overlaps and compact as specified herein. Follow manufacturer's recommended installation procedures and see Section 31 05 19.

3.5 FILLING AND BACKFILLING

Fill and backfill to contours, elevations, and dimensions indicated. Compact each lift before placing overlaying lift.

3.5.1 Common Fill Placement

Provide for general site and under pile-supported structures. Place in 6 inch lifts. Compact areas not accessible to rollers or compactors with mechanical hand tampers. Aerate material excessively moistened by rain to a satisfactory moisture content. Finish to a smooth surface by blading, rolling with a smooth roller, or both.

3.5.2 Backfill and Fill Material Placement

Provide for paved areas and under concrete slabs, except where select material is provided. Place in 6 inch lifts. Do not place over wet or frozen areas. Place backfill material adjacent to structures as the structural elements are completed and accepted. Backfill against concrete only when approved. Place and compact material to avoid loading upon or against the structure.

3.5.3 Select Material Placement

Provide under structures not pile supported. Place in 6 inch lifts. Do not place over wet or frozen areas. Backfill adjacent to structures shall be placed as structural elements are completed and accepted. Backfill against concrete only when approved. Place and compact material to avoid loading upon or against structure.

3.5.4 Backfill and Fill Material Placement Over Pipes and at Walls

Backfilling shall not begin until construction below finish grade has been approved, underground utilities systems have been inspected, tested and approved, forms removed, and the excavation cleaned of trash and debris. Backfill shall be brought to indicated finish grade. Heavy equipment for spreading and compacting backfill shall not be operated closer to

foundation or retaining walls than a distance equal to the height of backfill above the top of footing; the area remaining shall be compacted in layers not more than 4 inches in compacted thickness with power-driven hand tampers suitable for the material being compacted. Backfill shall be placed carefully around rods, pipes or tanks to avoid damage to coatings, wrappings, or tanks. Backfill shall not be placed against foundation walls prior to 7 days after completion of the walls. As far as practicable, backfill shall be brought up evenly on each side of the wall and sloped to drain away from the wall.

3.5.5 Porous Fill Placement

Provide under floor and area-way slabs on a compacted subgrade. Place in 4 inch lifts with a minimum of two passes of a hand-operated plate-type vibratory compactor.

3.6 BURIED WARNING AND IDENTIFICATION TAPE

Provide buried utility lines with utility identification tape. Bury tape 12 inches below finished grade; under pavements and slabs, bury tape 6 inches below top of subgrade.

3.7 BURIED DETECTION WIRE

Bury detection wire directly above non-metallic piping at a distance not to exceed 12 inches above the top of pipe. The wire shall extend continuously and unbroken, from manhole to manhole. The ends of the wire shall terminate inside the manholes at each end of the pipe, with a minimum of 3 feet of wire, coiled, remaining accessible in each manhole. The wire shall remain insulated over it's entire length. The wire shall enter manholes between the top of the corbel and the frame, and extend up through the chimney seal between the frame and the chimney seal. For force mains, the wire shall terminate in the valve pit at the pump station end of the pipe.

3.8 COMPACTION

Determine in-place density of existing subgrade; if required density exists, no compaction of existing subgrade will be required. Density requirements specified herein are for cohesionless materials. When cohesive materials are encountered or used, density requirements may be reduced by 5 percent.

3.8.1 Structures, Spread Footings, and Concrete Slabs

Compact top of subgrades to 95 percent of ASTM D698. Compact fill and backfill material to 95 percent of ASTM D698.

3.8.2 Adjacent Area

Compact areas within 5 feet of structures to 90 percent of ASTM D698.

3.9 FINISH OPERATIONS

3.9.1 Grading

Finish grades as indicated within one-tenth of one foot. Grade areas to drain water away from structures. Maintain areas free of trash and debris. See drawings for grading elevations.

3.9.2 Protection of Surfaces

Protect newly backfilled, graded, and topsoiled areas from traffic, erosion, and settlements that may occur. Repair or reestablish damaged grades, elevations, or slopes.

3.10 DISPOSITION OF SURPLUS MATERIAL

Remove from Government property surplus or other soil material not required or suitable for filling or backfilling, and brush, refuse, stumps, roots, and timber.

3.11 FIELD QUALITY CONTROL

3.11.1 Sampling

Take the number and size of samples required to perform the following tests.

3.11.2 Testing

Perform the following test for each material used. Provide additional tests for each source change.

3.11.2.1 Fill and Backfill Material Testing

Test fill and backfill material in accordance with ASTM C136 for conformance to ASTM D2487 gradation limits.

-- End of Section --

SECTION 31 62 19.13

WOOD MARINE PILES

PART 1 GENERAL

1.1 REFERENCES

The publications listed below form a part of this specification to the extent referenced. The publications are referred to within the text by the basic designation only.

AMERICAN WOOD PROTECTION ASSOCIATION (AWPA)

AWPA A1	(2015) Standard Methods for Analysis of Creosote and Oil-Type Preservatives
AWPA A4	(2011) Standard Methods for Sampling Wood Preservatives
AWPA A5	(2015) Standard Methods for Analysis of Oil-Borne Preservatives
AWPA A6	(2015) Standard Method for the Determination of Oil-Type Preservatives from Small Samples
AWPA A8	(1990) Qualitative Recovery of Creosote or Creosote Solution from Freshly Treated Piles, Poles, or Timber (Squeeze Method)
AWPA A9	(2013) Standard Method for Analysis of Treated Wood and Treating Solutions by X-Ray Spectroscopy
AWPA M2	(2019) Standard for the Inspection of Preservative Treated Wood Products for Industrial Use
AWPA M4	(2015) Standard for the Care of Preservative-Treated Wood Products
AWPA M6	(2013) Brands Used on Preservative Treated Materials

ASTM INTERNATIONAL (ASTM)

ASTM A307 HDG	(2014; E 2017) Standard Specification for Carbon Steel Bolts, Studs, and Threaded Rod 60 000 PSI Tensile Strength
ASTM A354	(2017; E 2017; E 2018) Standard Specification for Quenched and Tempered Alloy Steel Bolts, Studs, and Other Externally Threaded Fasteners
ASTM A436	(1984; R 2020) Standard Specification for Austenitic Gray Iron Castings

ASTM A563	(2015) Standard Specification for Carbon and Alloy Steel Nuts
ASTM D25	(2012; R 2017) Standard Specification for Round Timber Piles
ASTM D450/D450M	(2007; E 2013; R 2013) Coal-Tar Pitch Used in Roofing, Dampproofing, and Waterproofing

U.S. NATIONAL ARCHIVES AND RECORDS ADMINISTRATION (NARA)

40 CFR 171	Certification of Pesticide Applicators

WESTERN WOOD PRESERVERS INSTITUTE (WWPI)

WWPI Mgt Practices	(1996; R 2011) Best Management Practices for the Use of Treated Wood in Aquatic and Wetland Environments

1.2 SUBMITTALS

Government approval is required for submittals with a "G" designation; submittals not having a "G" designation are for Contractor Quality Control approval. Submit the following in accordance with Section 01 33 00 SUBMITTAL PROCEDURES:

SD-03 Product Data

Piles; G

Pile driving equipment; G

Submit complete descriptions of pile driving equipment, including hammers, leads, driving helmets, cushion blocks, driving blocks, collars, extractors, and other appurtenances for approval prior to commencement of work.

Hardware; G

SD-06 Test Reports

Preservative treated piles; G

A certified test assay analysis from an approved testing organization attesting that the piles to be used in the work have been given the preservative treatment required by these specifications shall be submitted prior to commencement of the work.

SD-07 Certificates

MSDS and CIS; G

Preservative Treatment; G

Best Management Practices (BMPs); G

1.3 QUALITY ASSURANCE

1.3.1 Preservative Treated Piles - Timber

The Contractor shall be responsible for the quality of treated wood products. The Contractor shall provide the Contracting Officer's Representative (COR) with the inspection report of an independent inspection agency, approved by the Contracting Officer, that offered products comply with applicable AWPA standards. Identify treatment on each piece by the quality mark of an agency accredited by the Board of Review of the American Lumber Standard Committee. Inspect all preservative-treated wood visually to ensure there are no excessive residual materials or preservative deposits. Materials shall be clean and dry or it will be rejected because of environmental concerns.

1.3.2 MSDS and CIS

Provide Materials and Safety Data Sheets (MSDS) and Consumer Information Sheets (CIS) associated with timber pile preservative treatment. Contractor shall comply with all safety precautions indicated on MSDS and CIS.

1.3.3 Best Management Practices (BMPs)

The producer of the treated wood products shall provide certification that Best Management Practices (BMPs) for the use of Treated Wood in Aquatic Environments were utilized including a written description and appropriate documentation of the BMPs utilized.

1.4 DELIVERY, STORAGE, AND HANDLING

Handle and store piles in accordance with AWPA M4. Comply with paragraph entitled "MSDS and CIS." Special care shall be taken in supporting piles to prevent the including of excessive bending stresses in the piles. Piles shall be carefully handled without dropping, breaking of outer fibers, and penetrating the surface with tools. Peaveys, cant hooks, pikes, and other pointed tools shall not be used in handling treated piles.

PART 2 PRODUCTS

2.1 MATERIALS

2.1.1 Piles

Provide Douglas fir or Southern pine clean-peeled and treated piles conforming to ASTM D25 and other requirements as specified. Piles shall be in one piece of the length as shown. Splices will not be permitted. Each treated pile shall be branded by the producer, in accordance with AWPA M6. Pile circumferences shall be as follows:

b. Fender Piles: Minimum butt circumference measured at 3 feet from the butt end shall be 13 inches.

2.1.1.1 Spliced Piles

Spliced piles will not be allowed.

2.1.2 Preservative Treatment

Treat piles by the full-cell pressure process in accordance with AWPA U1 to the retention and penetration for marine piling and produce in accordance with WWPI Mgt Practices, as follows:

a. Fender Piles: Waterborne preservative for marine piles (ACA - Ammoniacal Copper Arsenate, ACZA - Ammoniacal Copper Zinc Arsenate, CCA - Chromated Copper Arsenate).

2.1.3 Coal-Tar Pitch

Coal-tar pitch for brush treatment of piles shall conform to ASTM D450/D450M, Type A.

2.1.4 Connection Hardware

Pile hardware must consisting of bolts with necessary nuts and washers, timber connectors, drift pins, dowels, nails, screws, spikes, and other fastenings. Provide bolts with washers under nut and head. Bolts and nuts must conform to ASTM A307 HDG HDG. Provide cast-iron ogee, malleable iron washers, or plate or cut washers where indicated. Provide bolts with washers under nut and head. Threaded rods shall be ASTM A354, Grade B5. Nuts shall be ASTM A563, Grade A heavy hex. Washers shall be ASTM A436.

2.2 TESTS, INSPECTIONS, AND VERIFICATIONS

2.2.1 Inspection of Piles

The Contractor shall provide the necessary facilities for the proper inspection of each pile. Piles to be preservative treated will be inspected prior to treatment. Piles will be inspected at the shipping point or at the work site if so decided. Pile inspection at the shipping point will not be performed for less than 100 piles in one locality. Piles with specified variations in characteristics shall be placed in separate lots for inspection. Piles shall be so marked or segregated into marked lots that there will be no possibility of error in assignment after they have been inspected. Piles damaged after inspection may be subsequently rejected if damage is deemed sufficient for rejection. All rejected piles shall be removed as directed.

2.2.2 Inspection of the Preservative Treatment Process

Inspection of the preservative treatment process will be in accordance with AWPA M2. The Contractor shall notify the Contracting Officer where preservative treatment will be done not less than 15 days prior to the start of the treatment and shall provide the necessary facilities for the proper inspection of the treatment process. Allow the Contracting Officer unlimited access to the plant and inspection privileges for each facet of the treating process.

2.2.3 Sampling and Testing

Sampling and testing shall be performed by an approved testing organization adequately equipped to perform such services.

2.2.3.1 Sampling

Representative samples of preservatives for testing shall be obtained from

storage containers using the methods described in AWPA A4. The recovery of creosote and creosote solution and oil-borne preservatives from piles for testing shall be in accordance with the methods described in AWPA A8 and AWPA A6, respectively. The analysis of wood treated with waterborne preservatives shall be done in accordance with AWPA A9.

2.2.3.2 Testing

Creosote and creosote solutions, waterborne preservatives, and oil-borne preservatives shall be tested for conformance to AWPA A1, AWPA A9, and AWPA A5, respectively. The net retention and the penetration of preservatives in piles shall be determined as specified in AWPA M2 and the additional requirements listed. The determination of the net retention of waterborne preservatives in piles which have received the dual treatment of waterborne preservatives and creosote or creosote solutions shall be made after the extraction of the creosote or creosote solutions.

PART 3 EXECUTION

3.1 INSTALLATION

3.1.1 Pile Driving Equipment

Pile driving equipment shall meet the requirements of the permits as well as the following requirements.

3.1.1.1 Pile Driving Hammers

Pile driving hammers shall be steam, air or diesel drip, single-action, double-acting, differential-acting, or vibratory type and must conform to the type allowed but the permits. The size or capacity of hammers shall be as recommended by the manufacturer for the pile weights and solid formation to be penetrated. The pile hammer shall be of sufficient weight and energy to install the specified pile without damage into the soils as indicated. The maximum driving energy of hammers shall be 15,000 foot-pounds for piles for any length. Test piles shall be driven with the same size and type hammer, operating with the same effective energy and efficiency as that to be used in driving job piles. Diesel powered hammers shall be operated at the rate recommended by the manufacturer throughout the entire driving period. Sufficient pressure shall be maintained at the hammer so that:

a. For double-acting hammers, the number of blows per minute during and at the completion of driving of a pile is equal approximately to that at which the hammer is rated;

b. For single-acting hammers, there is a full upward stroke of the ram; and,

c. For differential-type hammers, there is a slight rise of the hammer base during each upward stroke.

3.1.1.2 Leads

Leads are required and shall be fixed at the top and adjustable at the bottom. Swinging leads may be allowed if site conditions merit their use and are approved.

3.1.1.3 Driving Cap or Helmet and Cushion Block

Driving cap or helmet shall be an approved design and shall be capable of protecting pile heads, minimizing energy absorption, and transmitting hammer energy uniformly and consistently to piles. Place driving helmet or cap and cushion block combination between top of pile and the ram. Driving cap shall fit snugly on the top of piles and shall employ a cushion block to prevent impact damage to piles. The cushion block may be a solid or laminated softwood block with the grain parallel to the pile axis and enclosed in a close-fitting steel housing. The thickness of the block shall be suitable for the length of pile to be driven and the character of subsurface material to be encountered. If block is damaged, split, highly compressed, charred or burned, or has become spongy or deteriorated, replace with new block. Under no circumstances will the use of small wood blocks, wood chips, rope, or other material permitting excessive loss of hammer energy be permitted.

3.1.1.4 Pile Collars

Collars or bands for protecting pile butts against splitting, brooming, and other damage while being driven shall be of an approved design.

3.1.1.5 Jetting Equipment

Jetting piles is not allowed.

3.1.2 Fender Piles

Inspect piles when delivered and when in the leads immediately before driving. Secure piles in their proper alignment and cut piles at cutoff grade with pneumatic tools by sawing or other approved method. Pile heads at cutoff shall be sound. Counterbore holes for bolts where indicated for countersinking bolt heads and washers. After installation of bolts, fill counterbored holes with an approved bituminous material. Drill holes for drift bolts 1/8 inch smaller than bolt diameter. Drill holes for through bolts 1/16 inch larger than diameter of bolt shank. Drill holes for lag bolts not larger than body of bolt at base of tread. Fender piles shall have tops beveled outboard as indicated.

3.1.2.1 Driving Fender Piles

Pile hammers shall be air, steam, or diesel powered, and of an approved type with a capacity at least equal to the hammer manufacturer's recommendation for the total weight of pile and character of subsurface material to be encountered. Minimum driving energy shall be 8,000 foot-pounds with maximum driving energy of 15,000 foot-pounds. Weight of the hammer for drop hammers shall not be less than 2,000 pounds. Vibratory hammers may be used as long as noted embedment can be achieved.

3.1.2.2 Fastening

Use washers of the size and type specified under bolt heads and nuts which would otherwise come in contact with wood.

3.1.2.3 Tolerances in Driving

Piles shall be driven in the locations indicated. Fender piles may be manipulated a maximum of 0.50 inch per foot of pile length in a direction parallel to the pier face and 0.25 inch per foot of pile length in a

direction perpendicular to the pier face. Remove and replace with new piles those damaged, mislocated, driven below the design cutoff, or driven out of alignment.

3.1.3 Spudding of Piles

Spudding shall not be permitted.

3.1.4 Predrilling of Piles

Predrilling shall not be permitted.

3.2 PROTECTION

3.2.1 Protection of Piles

Square the heads and tips of piles to the driving axis. Laterally support piles during driving, but do not unduly restrain piles from rotation in the leads. Swinging leads will be permitted. Where pile orientation is essential, take precautionary measures to maintain the orientation during driving.

3.2.1.1 Damaged Piles

Driving of piles shall not subject them to damage. Piles which are damaged, split, broomed, or broken by reason of internal defects or by improper driving below cutoff elevation so as to impair them for the purpose intended shall be removed and replaced; a second pile may be driven adjacent thereto at the Contractor's expense. Minor damaged areas of treated piles shall be brush-coated with creosote or the same preservative used to treat the piles.

3.2.1.2 On Site Application of Wood Preservatives

All on site application of wood preservatives must be performed by a person certified through an EPA approved training program for the application of wood treatment products in accordance with 40 CFR 171, regulated under 7 U.S.C.A. Sections 136 to 136y, Federal Insecticide, Fungicide, and Rodenticide Act (FIFRA). On site treatment shall also be in accordance with AWPA M4, Sections 1.5, 2.2, 2.3, and 3.1.

3.3 FIELD QUALITY CONTROL

3.3.1 Inspections

When Government inspections result in product rejection, the Contractor shall promptly segregate and remove rejected material from the premises. The Government may also charge the Contractor an additional cost of inspection or test when prior rejection makes reinspection or retest necessary.

3.3.2 Obstructions

The Contractor must notify the Contracting Officer if obstructions are encountered. Contractor must provide unit price for removing obstructions that could be older piles below the mudline. Contractor must make reasonable effort to avoid obstrcutions, minor obstructions are considered part of the project.

-- End of Section --

SECTION 33 11 00

WATER PIPING

PART 1 GENERAL

1.1 DESIGN REQUIREMENTS

1.1.1 Water Lines

Provide water lines indicated from water distribution main to risers at the ship's connection at indicated location on the pier. Water lines above pier deck shall be constructed using a manufacturer's standard pre-insulated polyethylene (PE) piping system. Buried water lines shall be ductile iron and copper. Provide water line appurtenances and valves as specified and where indicated.

1.2 REFERENCES

The publications listed below form a part of this specification to the extent referenced. The publications are referred to within the text by the basic designation only.

AMERICAN SOCIETY OF MECHANICAL ENGINEERS (ASME)

ASME B16.18	(2018) Cast Copper Alloy Solder Joint Pressure Fittings
ASME B16.22	(2021) Wrought Copper and Copper Alloy Solder Joint Pressure Fittings
ASME B16.26	(2018) Standard for Cast Copper Alloy Fittings for Flared Copper Tubes

AMERICAN WATER WORKS ASSOCIATION (AWWA)

AWWA B300	(2018) Hypochlorites
AWWA B301	(2018) Liquid Chlorine
AWWA C104/A21.4	(2016) Cement-Mortar Lining for Ductile-Iron Pipe and Fittings for Water
AWWA C110/A21.10	(2012) Ductile-Iron and Gray-Iron Fittings for Water
AWWA C111/A21.11	(2017) Rubber-Gasket Joints for Ductile-Iron Pressure Pipe and Fittings
AWWA C115/A21.15	(2020) Flanged Ductile-Iron Pipe With Ductile-Iron or Gray-Iron Threaded Flanges
AWWA C151/A21.51	(2017) Ductile-Iron Pipe, Centrifugally Cast
AWWA C153/A21.53	(2019) Ductile-Iron Compact Fittings for Water Service

AWWA C509	(2015) Resilient-Seated Gate Valves for Water Supply Service
AWWA C515	(2020) Reduced-Wall, Resilient-Seated Gate Valves for Water Supply Service
AWWA C600	(2017) Installation of Ductile-Iron Mains and Their Appurtenances
AWWA C651	(2014) Standard for Disinfecting Water Mains
AWWA C655	(2009) Field Dechlorination
AWWA C800	(2021) Underground Service Line Valves and Fittings
AWWA C906	(2021) Polyethylene (PE) Pressure Pipe and Fittings, 4 In. (100 mm) through 65 In., (1,575 mm) for Water Distribution and Transmission
AWWA M9	(2008; Errata 2013) Manual: Concrete Pressure Pipe
AWWA M41	(2009; 3rd Ed) Ductile-Iron Pipe and Fittings

ASTM INTERNATIONAL (ASTM)

ASTM A48/A48M	(2003; R 2021) Standard Specification for Gray Iron Castings
ASTM B61	(2015; R 2021) Standard Specification for Steam or Valve Bronze Castings
ASTM B62	(2017) Standard Specification for Composition Bronze or Ounce Metal Castings
ASTM B88	(2020) Standard Specification for Seamless Copper Water Tube
ASTM B209	(2014) Standard Specification for Aluminum and Aluminum-Alloy Sheet and Plate
ASTM B221	(2021) Standard Specification for Aluminum and Aluminum-Alloy Extruded Bars, Rods, Wire, Profiles, and Tubes
ASTM F714	(2021a) Standard Specification for Polyethylene (PE) Plastic Pipe (DR-PR) Based on Outside Diameter
ASSE 1013	(2021) Performance Requirements for Reduced Pressure Principle Backflow Prevention Assemblies

MANUFACTURERS STANDARDIZATION SOCIETY OF THE VALVE AND FITTINGS INDUSTRY (MSS)

MSS SP-80	(2019) Bronze Gate, Globe, Angle and Check Valves

NSF INTERNATIONAL (NSF)

NSF/ANSI 14	(2020) Plastics Piping System Components and Related Materials
NSF/ANSI 61	(2020) Drinking Water System Components - Health Effects

1.3 SUBMITTALS

Government approval is required for submittals with a "G" classification. Submittals not having a "G" classification are for Contractor Quality Control approval. Submit the following in accordance with Section 01 33 00 SUBMITTAL PROCEDURES:

SD-03 Product Data

Pipe, Fittings, Joints and Couplings; G

Valves; G

Valve Boxes; G

Pipe Restraint; G

SD-06 Test Reports

Bacteriological Samples; G

Hydrostatic Test

PART 2 PRODUCTS

2.1 MATERIALS

All materials are intended for potable water use unless otherwise indicated. Comply with NSF/ANSI 61 or NSF/ANSI 14 for all potable water pipe, fittings and other applicable materials. Provide pipe, fittings and other applicable materials bearing NSF/ANSI 61 or NSF/ANSI 14 markings for potable water service.

2.1.1 Pipe, Fittings, Joints And Couplings

Submit manufacturer's standard drawings or catalog cuts, except submit both drawings and cuts for push-on and rubber-gasketed bell-and-spigot joints. Include information concerning gaskets with submittal for joints and couplings.

2.1.1.1 Ductile-Iron Piping

2.1.1.1.1 Pipe and Fittings

Pipe, AWWA C151/A21.51, Pressure Class 350. Flanged pipe,

AWWA C115/A21.15. Fittings, AWWA C110/A21.10 or AWWA C153/A21.53. Provide fittings with pressure ratings equivalent to that of the pipe. Provide cement-mortar lining, AWWA C104/A21.4, standard thickness on pipe and fittings. Pipe and fittings shall have manufactured restraining system.

2.1.1.1.2 Joints and Jointing Material

Provide push-on joints with mechanical restraints for long runs and mechanical joints for fittings unless otherwise indicated. Provide flanged joints for connection to valves.

a. Mechanical Joints: Dimensional and material requirements for pipe ends, glands, bolts and nuts, and gaskets as recommended in AWWA C111/A21.11.

2.1.1.2 Pre-Insulated Piping System

Pre-Insulated Piping shall consist of an inner polyethylene (PE) product pipe, an integral layer of polyurethane piping insulation, and an exterior PE jacket provided as a pre-manufactured piping system. Entire piping shall be manufactured and installed to prevent the ingress of moisture into the system. An integral 3/4-inch conduit made of polyethylene within the insulation layer, directly adjacent to the product piping shall be provided to allow heat tracing to be added as the piping system is assembled. All piping, fittings, and components shall be provided by a single piping system manufacturer. Field joints shall be insulated, sealed and jacketed in accordance to the piping system manufacturer's recommendations.Conduit shall be provided with pull boxes at bends to allow for continuous pull of heating cable. Where the pipeline transitions from aboveground to underground, extend the insulation, heating cable, and jacket to 36" below ground and completely seal the insulation.

2.1.1.2.1 Field Joints for Pre-Insulated Piping System

Field joints of the pre-insulated piping system shall be constructed per the manufacturer's recommendations. Water pipe shall be joined, then the insulation shall be installed. A shrink sleeve or similar outer layer shall be applied to complete the joint. Piping system shall be continuous and waterproof once all joints are complete.

2.1.1.2.2 Polyethylene (PE) Pipe

AWWA C906, ASTM F714, PE4710, minimum cell class PE 445574C, oxidative resistance classification CC3.

2.1.1.2.3 Copper Tubing and Associated Fittings

Tubing, ASTM B88, Type K. Fittings for solder-type joint, ASME B16.18 or ASME B16.22; fittings for compression-type joint, ASME B16.26, flared tube type.

2.1.2 Valves

2.1.2.1 Gate Valves 3 Inch Size and Larger on Buried Piping

AWWA C509 or AWWA C515.

2.1.2.2 Water Service Valves

2.1.2.2.1 Gate Valves Smaller than 3 Inch in Size on Buried Piping

Gate valves smaller than 3 inch size on Buried Piping MSS SP-80, Class 150, solid wedge, nonrising stem, with flanged or threaded end connections, a union on one side of the valve, and a handwheel operator.

2.1.2.2.2 Gate Valves Smaller Than 3 Inch Size in Aboveground Location

MSS SP-80, Class 150, stainless steel, solid wedge, inside screw, rising stem. Provide valves with flanged or threaded end connections, a union on one side of the valve, and a handwheel operator.

2.1.2.3 Valve Boxes

Provide a valve box for each gate valve on buried piping. Construct adjustable valve boxes manufactured from cast iron of a size compatible for the valve on which it is used. Provide cast iron valve boxes with a minimum cover and wall thickness of 3/16 inch and conforming to ASTM A48/A48M, Class 35B. Coat the cast-iron box with a heavy coat of bituminous paint. Cast the word "WATER" on the lid.

2.1.3 Meters

2.1.3.1 Turbine Type Meter

Water meter shall be provided by the City of New London. All other piping, valves, and accessories shall be provided by the Contractor.

2.1.3.2 Weatherproof Enclosure

The weatherproof enclosure shall be a factory assembled sectionalized aluminum enclosure with tongue and groove sections that slide together and secure to a concrete pad to form a weatherproof assembly. Access panels shall be removable and lockable with lockable rotating handles. The bottom of the enclosure shall have a drain port for water backflow discharge that closes to prevent wind, debris, and varmints entering the enclosure. Enclosures shall be designed to resist wind speeds up to 120mph. Aluminum sheething shall be Type 3003 aluminum conforming to ASTM B209 having a thickness of 0.050 inches (18 gauge). Internal bracing shall be Type 6063-T52 aluminum and conforming to ASTM B221. No wood or particle board shall be used in the construction of the enclosure. Anchor pads shall be galvanized steel with expansion anchors as indicated. The enclosure shall be insulated with 1.5" unicellular, non-wicking, polyisocyanate foam sprayed in place that forms a monolithic bond between the aluminum bracing and aluminum sheething for an R-Value of 10. An internal electric heater shall protect the piping and equipment from exterior temperatures -30F, and shall be designed by the manufacturer of the enclosure to maintain the equipment at +40F. The heater shall be wall mounted to an internal aluminum heater plate specifically designed with the aluminum enclosure at 8" above the slab. The power shall be protected with a ground-fault interrupting (GFI) receptacle mounted a minumum of 8" from the bottom of the receptacle to the top of the slab. Heaters shall be listed for wet/damp locations.

2.1.3.3 Reduced Pressure Zone (RPZ) Backflow Preventer

Backflow preventer shall conform to the American Society of Sanitary

Engineers Standard ASSE 1013 and designed for horizontal, straight through flow. The RPZ shall have two independent back check valves with a zone between the two valves which senses a backflow condition and opens to relieve the pressure imbalance. The RPZ valve body shall be bronze with threaded end connections. The RPZ valve shall be provided with two bronze ball valves on the inlet and outlet. The RPZ shall have bronze test ports with ball valves for connecting a test apparatus to verify proper operation of the valve. The valve assembly shall be provided with an air-gap fitting with a drain piped to the nearest clear flowing drain or to the outside of the enclosure.

2.1.4 Disinfection

Chlorinating materials are to conform to: Chlorine, Liquid: AWWA B301; Hypochlorite, Calcium and Sodium: AWWA B300.

2.2 ACCESSORIES

2.2.1 Pipe Restraint

2.2.1.1 Joint Restraint

Provide mechanical joint restraint devices with gripper wedges incorporated into a follower gland and specifically designed for the pipe material.

2.2.2 Water Service Line Appurtenances

2.2.2.1 Corporation Stops

Ground key type; lead-free bronze, ASTM B61 or ASTM B62; compatible with the working pressure of the system and solder-joint, or flared tube compression type joint. Threaded ends for inlet and outlet of corporation stops, AWWA C800; coupling nut for connection to flared copper tubing, ASME B16.26.

2.3 SELF-REGULATING, PARALLEL-RESISTANCE HEATING CABLES

Comply with IEEE 515.1. Heating element shall be a pair of parallel No. 16 AWG, stranded copper bus wires embedded in crosslinked conductive polymer core, which varies heat output in response to temperature along its length. Maximum heat output shall be 3 watts/ft. Voltage shall be 208 volts, single phase, 60 hertz. Terminate cables with waterproof, factory-assembled, nonheating leads with connectors at one end, and seal the opposite end watertight. Cable shall be capable of crossing over itself once without overheating. Maximum Operating Temperature shall be 150 deg F. Electrical components, devices, and accessories shall be listed and labeled as defined in NFPA 70, by a qualified testing agency, and marked for intended location and application.

2.3.1 Electrical Insulating Jacket

Electrical Insulating Jacket shall be flame-retardant polyolefin. Cable Cover shall be tinned-copper braid and polyolefin outer jacket with ultraviolet inhibitor.

2.3.2 Mechanical Thermostat

Mechanical thermostat shall be ambient-sensing mechanical type thermostat. Sensor shall be fixed fluid-filled silicon bulb and capillary type.

2.3.3 Heat Tape Enclosure

Heat tape control enclosure shall be NEMA 4X corrosion-resistant, waterproof control. Temperature set point shall be adjustable range from 15 to 140 deg F.

2.3.4 Testing

Cable Tests: Test cables for electrical continuity and insulation integrity before energizing. Test cables to verify rating and power input. Energize and measure voltage and current simultaneously. Retain first paragraph below for pipe-mounted freeze protection and for domestic hot-water-temperature maintenance. Repeat tests for continuity, insulation resistance, and input power after applying thermal insulation on pipe-mounted cables. Cables will be considered defective if they do not pass tests.

PART 3 EXECUTION

3.1 PREPARATION

3.1.1 Connections to Existing System

Perform all connections to the existing water system in the presence of the Contracting Officer.

3.1.2 Operation of Existing Valves

Do not operate valves within or directly connected to the existing water system unless expressly directed to do so by the Contracting Officer.

3.2 INSTALLATION

Install all materials in accordance with the applicable reference standard, manufacturers instructions and as indicated herein.

3.2.1 Piping

3.2.1.1 General Requirements

Install pipe, fittings, joints and couplings in accordance with the applicable referenced standard, the manufacturer's instructions and as specified herein.

3.2.1.1.1 Pipe Laying and Jointing

Remove fins and burrs from pipe and fittings. Before placing in position, clean pipe, fittings, valves, and accessories, and maintain in a clean condition. Provide proper facilities for lowering sections of pipe into trenches. Under no circumstances is it permissible to drop or dump pipe, fittings, valves, or other water line material into trenches. Cut pipe

cleanly, squarely, and accurately to the length established at the site and work into place without springing or forcing. Replace a pipe or fitting that does not allow sufficient space for installation of jointing material. Blocking or wedging between bells and spigots is not permitted. Lay bell-and-spigot pipe with the bell end pointing in the direction of laying. Grade the pipeline in straight lines; avoid the formation of dips and low points. Support pipe at the design elevation and grade. Secure firm, uniform support. Wood support blocking is not permitted. Lay pipe so that the full length of each section of pipe and each fitting rests solidly on the pipe bedding; excavate recesses to accommodate bells, joints, and couplings. Provide anchors and supports for fastening work into place. Make provision for expansion and contraction of pipelines. Keep trenches free of water until joints have been assembled. At the end of each work day, close open ends of pipe temporarily with wood blocks or bulkheads. Do not lay pipe when conditions of trench or weather prevent installation. Provide a minimum of 3 1/2 feet depth of cover over top of pipe.

3.2.1.1.2 Tracer Wire

Install a continuous length of tracer wire for the full length of each run of nonmetallic pipe. Attach wire to top of pipe in such manner that it will not be displaced during construction operations.

3.2.1.1.3 Connections to Existing Water Lines

Make connections to existing water lines after coordination with the facility and with a minimum interruption of service on the existing line. Make connections to existing lines under pressure in accordance with the recommended procedures of the manufacturer of the pipe being tapped and as indicated, except as otherwise specified, tap concrete pipe in accordance with AWWA M9 for tapping concrete pressure pipe.

3.2.1.1.4 Penetrations

Provide ductile-iron or Schedule 40 steel wall sleeves for pipe passing through walls of valve pits and structures. Fill annular space between walls and sleeves with rich cement mortar. Fill annular space between pipe and sleeves with mastic.

3.2.1.2 Ductile-Iron Piping

Install pipe and fittings in accordance with the requirements of AWWA C600 for pipe installation, joint assembly, valve-and-fitting installation, and thrust restraint.

a. Jointing: Make push-on joints with the gaskets and lubricant specified for this type joint; assemble in accordance with the applicable requirements of AWWA C600 and AWWA M41 for joint assembly. Make mechanical joints with the gaskets, glands, bolts, and nuts specified for this type joint; assemble in accordance with the applicable requirements of AWWA C600 and AWWA M41 for joint assembly and the recommendations of Appendix A to AWWA C111/A21.11.

3.2.1.3 Metallic Piping for Service Lines

Install pipe and fittings in accordance with the applicable requirements of AWWA C600 for pipe installation, unless otherwise specified.

3.2.1.3.1 Screwed Joints

Make screwed joints up tight with a stiff mixture of graphite and oil, inert filler and oil, or graphite compound; apply to male threads only or with PTFE Tape, for use with threaded pipe. Threads are to be full cut; do not leave more than three threads on the pipe exposed after assembling the joint.

3.2.2 Meters

Install meters and meter vaults at the locations shown on the drawings. Center meters in the vaults to allow for reading and ease of removal or maintenance. Set top of box or vault at finished grade.

3.2.3 Disinfection

Prior to disinfection, provide disinfection procedures, proposed neutralization and disposal methods of waste water from disinfection as part of the disinfection submittal. Disinfect new water piping and existing water piping affected by Contractor's operations in accordance with AWWA C651. Disinfect new water piping using the AWWA C651. Ensure a free chlorine residual of not less than 10 parts per million after 24 hour holding period and prior to performing bacteriological tests.

3.2.4 Flushing

Flush solution from the systems with domestic water until maximum residual chlorine content is within the range of 0.2 to 0.5 parts per million, the residual chlorine content of the distribution system, or acceptable for domestic use. Use AWWA C655 neutralizing chemicals.

3.2.5 Pipe Restraint

3.2.5.1 Restrained Joints

Install restrained joints in accordance with the manufacturer's instructions Provide restraint system fabricated by the pipe manufacturer and furnished with the pipe.

3.2.6 Valves

3.2.6.1 Gate Valves

Install gate valves. Install gate valves, AWWA C509 or AWWA C515, in accordance with the requirements of AWWA C600 for valve-and-fitting installation and with the recommendations of the Appendix ("Installation, Operation, and Maintenance of Gate Valves") to AWWA C509 or AWWA C515. Make and assemble joints to gate valves as specified for making and assembling the same type joints between pipe and fittings.

3.3 FIELD QUALITY CONTROL

3.3.1 Tests

Notify the Contracting Officer a minimum of five days in advance of hydrostatic testing. Coordinate the proposed method for disposal of waste water from hydrostatic testing. Perform field tests, and provide labor, equipment, and incidentals required for testing. Provide documentation that all items of work have been constructed in accordance with the

Contract documents.

3.3.1.1 Hydrostatic Test

Test the water system in accordance with AWWA C600, with a minimum test pressure of 150 psi for 2 hours with no loss in pressure.

3.3.1.2 Bacteriological Testing

Perform bacteriological tests in accordance with AWWA C651. For new water mains use Option A and obtain two sets of samples for coliform analysis, each sample being collected at least 16 hours apart. Analyze samples by a certified laboratory, and submit the results of the bacteriological samples.

3.4 SYSTEM STARTUP

Water mains and appurtenances must be completely installed, disinfected, flushed, and satisfactory bacteriological sample results received prior to permanent connections being made to the active distribution system. Obtain approval by the Contracting Officer prior to the new water piping being placed into service.

3.5 CLEANUP

Upon completion of the installation of water lines and appurtenances, remove all debris and surplus materials resulting from the work.

-- End of Section --

SECTION 33 30 00

SANITARY SEWERAGE

PART 1 GENERAL

1.1 DESIGN REQUIREMENTS

1.1.1 Sewer Line

Provide sewer line indicated from the ship's connection at indicated location on the pier. Sewer line shall be constructed using a manufacturer's standard pre-insulated polyethylene (PE) piping system. Provide sewer appurtenances and valves as specified and where indicated.

1.2 REFERENCES

The publications listed below form a part of this specification to the extent referenced. The publications are referred to within the text by the basic designation only.

AMERICAN WATER WORKS ASSOCIATION (AWWA)

AWWA C104/A21.4	(2016) Cement-Mortar Lining for Ductile-Iron Pipe and Fittings for Water
AWWA C110/A21.10	(2012) Ductile-Iron and Gray-Iron Fittings for Water
AWWA C111/A21.11	(2017) Rubber-Gasket Joints for Ductile-Iron Pressure Pipe and Fittings
AWWA C115/A21.15	(2020) Flanged Ductile-Iron Pipe With Ductile-Iron or Gray-Iron Threaded Flanges
AWWA C151/A21.51	(2017) Ductile-Iron Pipe, Centrifugally Cast
AWWA C153/A21.53	(2019) Ductile-Iron Compact Fittings for Water Service
AWWA C600	(2017) Installation of Ductile-Iron Mains and Their Appurtenances

ASTM INTERNATIONAL (ASTM)

ASTM A36/A36M	(2019) Standard Specification for Carbon Structural Steel
ASTM A53/A53M	(2022) Standard Specification for Pipe, Steel, Black and Hot-Dipped, Zinc-Coated, Welded and Seamless
ASTM A500/A500M	(2021a) Standard Specification for Cold-Formed Welded and Seamless Carbon Steel Structural Tubing in Rounds and

	Shapes
ASTM A563	(2015) Standard Specification for Carbon and Alloy Steel Nuts
ASTM B633	(2019) Standard Specification for Electrodeposited Coatings of Zinc on Iron and Steel
ASTM F1554	(2020) Standard Specification for Anchor Bolts, Steel, 36, 55, and 105-ksi Yield Strength
ASTM F714	(2021a) Standard Specification for Polyethylene (PE) Plastic Pipe (DR-PR) Based on Outside Diameter
AWWA C906	(2021) Polyethylene (PE) Pressure Pipe and Fittings, 4 In. through 65 In. (100 mm Through 1,650 mm), for Waterworks

1.3 SUBMITTALS

Government approval is required for submittals with a "G" classification. Submittals not having a "G" classification are for Contractor Quality Control approval. Submit the following in accordance with Section 01 33 00 SUBMITTAL PROCEDURES:

SD-03 Product Data

Pressure Pipe; G

SD-06 Test Reports

Tests For Pressure Lines; G

PART 2 PRODUCTS

2.1 MATERIALS

Provide materials conforming to the respective specifications and other requirements specified below. Submit manufacturer's product specification,standard drawings or catalog cuts.

2.1.1 Pressure Pipe

2.1.1.1 Ductile Iron Pressure Piping

2.1.1.1.1 Ductile Iron Pressure Pipe and Fittings

Provide push-on-joint with factory restraining system ductile-iron pipe conforming to AWWA C151/A21.51, Pressure Class 350. Provide fittings conforming to AWWA C110/A21.10 or AWWA C153/A21.53. Use fittings which have a pressure rating at least equivalent to that of the pipe. Pipe and fittings are to have cement-mortar lining conforming to AWWA C104/A21.4, standard thickness. Piping shall be field coated with one coat of epoxy paint in addition to the standard factory asphalt coating.

2.1.1.1.2 Ductile Iron Pressure Joints and Jointing Materials

a. Joints, general: Use mechanical joints with factory restraining system for pipe and fittings. Use flanged joints for connection to valves.

b. Push-on joints: Shape of pipe ends and fitting ends, gaskets, and lubricant for joint assembly are to conform to AWWA C111/A21.11. Restraint system shall be factory fabricated.

c. Mechanical joints: Dimensional and material requirements for pipe ends, glands, bolts and nuts, and gaskets are to conform to AWWA C111/A21.11.

d. Flanged joints: Provide bolts, nuts, and gaskets for flanged connections as recommended in the Appendix to AWWA C115/A21.15.

2.1.2 Pre-Insulated Piping System

Pre-Insulated Piping shall consist of an inner polyethylene (PE) product pipe, an integral layer of polyurethane piping insulation, and an exterior PE jacket provided as a pre-manufactured piping system. Entire piping shall be manufactured and installed to prevent the ingress of moisture into the system. An integral 3/4-inch conduit made of polyethylene within the insulation layer, directly adjacent to the product piping shall be provided to allow heat tracing to be added as the piping system is assembled. All piping, fittings, and components shall be provided by a single piping system manufacturer. Field joints shall be insulated, sealed and jacketed in accordance to the piping system manufacturer's recommendations. Conduit shall be provided with pull boxes at bends to allow for continuous pull of heating cable. Where the pipeline transitions from aboveground to underground, extend the insulation, heating cable, and jacket to 36" below ground and completely seal the insulation.

2.1.2.1 Field Joints for Pre-Insulated Piping System

Field joints of the pre-insulated piping system shall be constructed per the manufacturer's recommendations. Sewer pipe shall be joined, then the insulation shall be installed. A shrink sleeve or similar outer layer shall be applied to complete the joint. Piping system shall be continuous and waterproof once all joints are complete.

2.1.3 Polyethylene (PE) Pipe

AWWA C906, ASTM F714, PE4710, minimum cell class PE 445574C, oxidative resistance classification CC3.

2.1.4 PIPE SUPPORTS AND METAL CAGES

2.1.4.1 [Enter Appropriate Subpart Title Here]Provide materials with smooth, flat surfaces unless otherwise indicated. For metal fabrications exposed to view in the completed Work, provide materials without seam marks, roller marks, rolled trade names, or blemishes. Fabricate units from steel shapes, plates, and bars of welded construction. Fabricate to sizes, shapes, and profiles indicated and as necessary to receive adjacent construction. Welding shall conform to the AWS D1.1/D1.1M, Structural Welding Code. Galvanize welded steel fabrications by hot-dip process after fabrication.

2.1.4.2 Steel Plates, Shapes, and Bars

Steel Plates, Shapes, and Bars: ASTM A36/A36M.

2.1.4.3 Steel Tubing

Steel Tubing: ASTM A500/A500M, cold-formed steel tubing.

2.1.4.4 Steel Pipe

ASTM A53/A53M, Standard Weight (Schedule 40) unless otherwise indicated.

2.1.4.5 Sub Title

Provide hot-dip galvanize zinc-plated fasteners with coating complying with ASTM B633.

2.1.4.6 Steel Bolts and Nuts

Regular hexagon-head bolts, ASTM A307, Grade A; with hex nuts, ASTM A563; and, where indicated, flat washers.

2.1.4.7 Anchor Bolts

ASTM F1554, Grade 36, of dimensions indicated; with nuts, ASTM A563; and, where indicated, flat washers.

2.1.5 SELF-REGULATING, PARALLEL-RESISTANCE HEATING CABLES

Comply with IEEE 515.1. Heating element shall be a pair of parallel No. 16 AWG, stranded copper bus wires embedded in crosslinked conductive polymer core, which varies heat output in response to temperature along its length. Maximum heat output shall be 3 watts/ft. Voltage shall be 208 volts, single phase, 60 hertz. Terminate cables with waterproof, factory-assembled, nonheating leads with connectors at one end, and seal the opposite end watertight. Cable shall be capable of crossing over itself once without overheating. Maximum Operating Temperature shall be 150 deg F. Electrical components, devices, and accessories shall be listed and labeled as defined in NFPA 70, by a qualified testing agency, and marked for intended location and application.

2.1.5.1 Electrically Insulating Jacket

Electrically Insulating Jacket shall be flame-retardant polyolefin. Cable Cover shall be tinned-copper braid and polyolefin outer jacket with ultraviolet inhibitor.

2.1.5.2 Mechanical Thermostat

Mechanical Thermostat shall be ambient-sensing mechanical type thermostat. Sensor shall be fixed fluid-filled silicon bulb and capillary type.

2.1.5.3 Heat Tape Enclosure

Heat Tape Enclosure shall be NEMA 4X corrosion-resistant, waterproof control. Temperature set point shall be adjustable range from 15 to 140 deg F.

2.1.5.4 Testing

Test cables for electrical continuity and insulation integrity before energizing. Test cables to verify rating and power input. Energize and measure voltage and current simultaneously. Retain first paragraph below for pipe-mounted freeze protection and for domestic hot-water-temperature maintenance. Repeat tests for continuity, insulation resistance, and input power after applying thermal insulation on pipe-mounted cables. Cables will be considered defective if they do not pass tests.

PART 3 EXECUTION

3.1 INSTALLATION

Insulate piping after inspection by the Contracting Officer.

3.1.1 Special Requirements

3.1.1.1 Installation of Ductile-Iron Pressure Lines

Install pipe and fittings in accordance with the requirements of AWWA C600 for pipe installation, joint assembly, and valve-and-fitting installation.

a. Make push-on joints with the restrainer fittings, gaskets, and lubricant specified for this type joint and assemble in accordance with the applicable requirements of AWWA C600 for joint assembly. Make mechanical-joints with the gaskets, glands, bolts, and nuts specified for this type joint; assemble in accordance with the applicable requirements of AWWA C600 for joint assembly and the recommendations of Appendix A to AWWA C111/A21.11. Make flanged joints with gaskets, bolts, and nuts specified for this type joint. Make flanged joints up tight, taking care to avoid undue strain on flanges, fittings, and other accessories. Align bolt holes for each flanged joint. Use full size bolts for the bolt holes; use of undersized bolts to make up for misalignment of bolt holes or for any other purpose will not be permitted. Do not allow adjoining flange faces to be out of parallel to such degree that the flanged joint cannot be made watertight without overstraining the flange. When flanged pipe or fittings have dimensions that do not allow the making of a proper flanged joint as specified, replace it by one of proper dimensions.

3.2 FIELD QUALITY CONTROL

The Contracting Officer will conduct field inspections and witness field tests specified in this section. Be able to produce evidence, when required, that each item of work has been constructed in accordance with the drawings and specifications.

3.2.1 Tests

Perform field tests and provide labor, equipment, and incidentals required for testing.

3.2.1.1 Tests for Pressure Lines

Test pressure lines in accordance with the applicable standard specified in this paragraph. For hydrostatic pressure test, use a hydrostatic pressure of 100 psi, holding the pressure for a period of not less than one hour.

3.2.2 Inspection

3.2.2.1 Post-Installation Inspection

Perform a post-installation inspection after connection has been made and before the connection is buried. Submit post-installation inspection request for field support at least 14 days in advance. The Installation's Utilities Field Support personnel will perform the post-connection inspection.

-- End of Section --

SECTION 33 32 16

WASTEWATER PUMPING STATION

PART 1 GENERAL

1.1 REFERENCES

The publications listed below form a part of this specification to the extent referenced. The publications are referred to within the text by the basic designation only.

AMERICAN SOCIETY OF MECHANICAL ENGINEERS (ASME)

ASME B1.20.1	(2013; R 2018) Pipe Threads, General Purpose (Inch)
ASME B16.3	(2021) Malleable Iron Threaded Fittings, Classes 150 and 300
ASME B16.11	(2016) Forged Fittings, Socket-Welding and Threaded

AMERICAN WATER WORKS ASSOCIATION (AWWA)

AWWA C104/A21.4	(2016) Cement-Mortar Lining for Ductile-Iron Pipe and Fittings for Water
AWWA C110/A21.10	(2021) Ductile-Iron and Gray-Iron Fittings
AWWA C111/A21.11	(2017) Rubber-Gasket Joints for Ductile-Iron Pressure Pipe and Fittings
AWWA M23	(2020) Manual: PVC Pipe - Design and Installation - Third Edition

ASTM INTERNATIONAL (ASTM)

ASTM A48/A48M	(2003; R 2021) Standard Specification for Gray Iron Castings
ASTM A53/A53M	(2022) Standard Specification for Pipe, Steel, Black and Hot-Dipped, Zinc-Coated, Welded and Seamless
ASTM C478	(2018) Standard Specification for Circular Precast Reinforced Concrete Manhole Sections
ASTM D1784	(2020) Standard Specification for Rigid Poly(Vinyl Chloride) (PVC) Compounds and Chlorinated Poly(Vinyl Chloride) (CPVC) Compounds
ASTM D1785	(2015; E 2018) Standard Specification for Poly(Vinyl Chloride) (PVC), Plastic Pipe, Schedules 40, 80, and 120

ASTM D2241	(2015) Standard Specification for Poly(Vinyl Chloride) (PVC) Pressure-Rated Pipe (SDR Series)
ASTM D2464	(2015) Standard Specification for Threaded Poly(Vinyl Chloride) (PVC) Plastic Pipe Fittings, Schedule 80
ASTM D2466	(2017) Standard Specification for Poly(Vinyl Chloride) (PVC) Plastic Pipe Fittings, Schedule 40
ASTM D2467	(2015) Standard Specification for Poly(Vinyl Chloride) (PVC) Plastic Pipe Fittings, Schedule 80
ASTM D3139	(2019) Joints for Plastic Pressure Pipes Using Flexible Elastomeric Seals
ASTM F477	(2014; R 2021) Standard Specification for Elastomeric Seals (Gaskets) for Joining Plastic Pipe

MANUFACTURERS STANDARDIZATION SOCIETY OF THE VALVE AND FITTINGS INDUSTRY (MSS)

MSS SP-80	(2019) Bronze Gate, Globe, Angle and Check Valves

NATIONAL ELECTRICAL MANUFACTURERS ASSOCIATION (NEMA)

NEMA MG 1	(2021) Motors and Generators

NATIONAL FIRE PROTECTION ASSOCIATION (NFPA)

NFPA 70	(2020; TIA 22-1; ERTA 1 2022) National Electrical Code

UNDERWRITERS LABORATORIES (UL)

UL 489	(2016; Rev 2019) UL Standard for Safety Molded-Case Circuit Breakers, Molded-Case Switches and Circuit-Breaker Enclosures

1.2 SUBMITTALS

Government approval is required for submittals with a "G" or "S" classification. Submit the following in accordance with Section 01 33 00 SUBMITTAL PROCEDURES:

SD-02 Shop Drawings

Fabrication Drawings

Erection/Installation Drawings

SD-03 Product Data

Submersible Sewage Grinder nonclog Pumps; G

Pump Performance Curve; G

Pump Motor; G

Pump Control System; G

Wet Well ; G

Valves; G

Access Hatch Covers

SD-06 Test Reports

Pump Test; G

SD-10 Operation and Maintenance Data

Operation And Maintenance Manuals

1.3 QUALITY CONTROL

1.3.1 Installer Qualifications

Provide manufacturer's authorized pump representative who is trained and approved for installation of pumps and packaged pump station required for this project.

1.4 DELIVERY, STORAGE, AND HANDLING OF MATERIALS

1.4.1 Delivery and Storage

Inspect materials delivered to site for damage. Unload and store with minimum handling. Store materials in enclosures or under protective covering. Rubber gaskets which are not to be installed immediately must be stored under cover, out of direct sunlight. Do not store materials directly on the ground. Keep interior of pipes, valves and fittings free of dirt and debris.

PART 2 PRODUCTS

2.1 SYSTEM DESCRIPTION

Provide a complete packaged sewage pump station with submersible grinder nonclog pumps including equipment and materials, installed and ready for operation. The pump supplier furnishes the controls, pumps and rail system to ensure unit integrity.

Submit fabrication drawings before installation. Submit drawings covering necessary or recommended changes to accommodate the equipment offered. Show on the drawings the design of the chamber, with dimensions, types, and thicknesses of materials, and elevation levels with reference to those elevations indicated.

Submit erection/installation drawings for the manhole chamber with the required equipment and accessories. Provide precast reinforced concrete manhole sections conforming to ASTM C478. Show the design of the chamber,

with dimensions, types, and thicknesses of materials, and elevation levels with reference to those elevations indicated.

2.2 SUBMERSIBLE SEWAGE GRINDER NONCLOG PUMPS

Provide submersible sewage nonclog pumps with grinder units as indicated. Provide submersible, centrifugal sewage pumps and grinder units capable of grinding the materials found in normal domestic sewage, including plastics, rubber, sanitary napkins, disposable diapers, animal hair and wooden articles into a finely ground slurry with particle dimensions no greater than 1/2 inch of the nonclogging type with passageways designed to pass 3 inch diameter spheres without clogging. Provide pump capacity, number of pumps and motor characteristics as indicated on the drawings. Select pumps to continuously operate in a submerged or partially submerged condition.

2.2.1 Pump Construction

2.2.1.1 Casing

Provide hard, close-grained cast iron casing that is free from blow holes, porosity, hard spots, shrinkage defects, cracks, and other injurious defects. Provide casings permitting replacement of wearing parts. Ensure all joints are gasketed to prevent leakage. Ensure passageways permit smooth flow of sewage and are free of sharp turns and projections. Use free standing pump support legs of cast-iron providing enough clearance for the solids to get into the grinder.

2.2.1.2 Impeller

Provide a stainless steel impeller for the grinder pump with stainless steel cutter, grinder, or slicer assembly. Provide nonclogging type cast-iron impeller, conforming to ASTM A48/A48M, Class 30, for a submersible nonclog pump. Ensure the impeller has a smooth surface and allows free flowing with the clearance to permit objects in the sewage to pass. Fit and key, spline, or thread impeller on shaft, and lock in such manner that lateral movement is prevented and reverse rotation will not cause loosening.

2.2.1.3 Bearings

Provide heavy duty ball thrust bearing or roller type bearing sized to withstand imposed loads. Oil lubricate bearings.

2.2.1.4 Lubrication

Provide self lubricating, permanently sealed bearings.

2.2.1.5 Balance

Balance rotating parts of the equipment mechanically and hydraulically to operate throughout the required range without excessive end thrust, vibration, and noise. Existence of defects that cannot be eliminated by adjustment will be sufficient cause for rejection of the equipment.

2.3 PUMP MOTOR

Provide hermetically sealed electric motors with moisture and temperature-sensing probes in the wet well NEMA MG 1 for submersible

pumps. Motor horsepower must not be less than pump horsepower at any point on the pump performance curve. Fit motors with lifting "eyes" capable of supporting entire weight of pump and motor. Seal the power cable inside the motor end bell. Provide a waterproof power cable for its full length. Air filled motors are not acceptable. Oil used must be able to be disposed as non-hazardous waste.

2.4 PUMP CONTROL SYSTEM

2.4.1 General

Provide an automatic type pump operating control including all necessary components to function reliably. Mount controls in a NEMA 4x rated stainless steel control panel. Ensure equipment subject to contact with sewage or sewage gases is corrosion-resistant metal. Provide an electronic controller that automatically activates and alternates the pump operation. If the liquid level continues to rise to the plans-specified level, the controller engages both pumps to operate simultaneously until both shut off at the specified low level. Provide hand-off-auto switches to choose the mode of operation for each pump. Provide controls with a 12 VDC powered float switch connected to the alarm contact of the battery charger to activate high-level alarms.

Protect pumping stations from lightning and transient voltage surges and equip with phase protection.

Design the control system to operate pumps at the power characteristics as shown on the plans. Ensure all controls and wiring meet or exceed the requirements of NFPA 70.

Require the control function to provide for the operation of the pumps under normal conditions and alternates the pumps on each pump down cycle.

2.4.2 Enclosure

The enclosure shall be a wall mount type suitable for mounting on strut or channel with a minimum depth sized to adequately house all the components. Provide a door that opens a minimum of 180 degrees and is equipped with a 3-point latch and padlockable handle.The panel shall have an internal mounting board for all lights, switches, and a lockable eternal door with only the alarm light and horn in public view.

Provide a dead front mounted in the panel to provide protection of personnel from live internal wiring. Install cutouts for breaker handles to allow operation of breakers without entering the compartment.

Mount all control switches, indicator pilot lights, elapsed time meters, duplex receptacle and other operational devices on the surface of the dead front.

Ensure the dead front opens a minimum of 150 degrees to allow access to equipment for maintenance.

Provide an enclosure ventilator located near the top of the enclosure on the opposite side of the generator receptacle.

2.4.3 Level Control System

Provide a sealed, mercury-free float switch control system to sense

variations of sewage level in the wet well.

Provide stainless steel float brackets in accordance with manufacturer's recommendations.

Mount floats at fixed elevations as shown on the drawings.

Use floats designed to tilt and operate their switches causing sequential turn-on turn-off of the pump, when the liquid level being sensed rises or falls past the float.

Provide an intrinsically safe barrier relay between the wet well and the control panel.

2.4.4 Alternator

Provide an alternator control switch to operate in connection with each float. Use an alternator control switch to alternate the operation of the pumps and operate both pumps if the water level rises above the second high water level. Incorporate time delay function and devices in the alternator controls such that both sewage pumps cannot be started simultaneously for an adjustable period of 10 to 120 seconds after shutdown. Use the delay function designed to operate in any condition of start-up in either normal or emergency operational mode.

2.4.5 Sewage Pump Alarm

Provide the control panel enclosure and with a flashing red light that is visible from 50 feet away, with long life bulb in guarded enclosure and 6 inch diameter horn. Use horns capable of emitting 120 DB at 10 feet. Power alarm horn and light from 12V DC power supply with battery backup. Provide a rechargeable battery rated to power both the horn and light for a minimum of two hours upon loss of main power. Provide circuitry to automatically recharge the battery after main power is restored. Use batteries capable of being fully recharged in no more than 20 hours. Use panel with power on light, push to test button for horn and light and push to silence button for horn and light with automatic reset for next alarm.

2.4.5.1 Alarms

Provide a test function ability for the alarm system. Provide alarms to activate under the following conditions:

a. High liquid level as sensed by the level control system.

b. Loss of main power.

c. Pump failure via temperature overload or motor heat sensor trip; provide motor high temperature light.

d. Seal failure with indication light.

2.4.5.2 Circuit Breakers

a. Provide an individual circuit breaker for each pump.

b. Include a control circuit breaker and an alarm circuit breaker in the control panel.

c. Provide circuit breakers in accordance with UL 489

2.4.5.3 Motor Starter and Overload Protection

Provide an International Electrotechnical Commission (IEC) rated motor starter and thermal overload protection located in the control panel for each pump. Include undervoltage release, manual reset buttons and hand-automatic selector switches.

2.4.5.4 Power Lugs

a. Size the incoming power lugs for the proper voltage, amperage, and horsepower for each pump station.

b. Include grounding lugs for the incoming power. Provide a dedicated grounding lug in the control panel for each pump.

c. Size ground lug and rod according to local and base electrical codes and install by a licensed electrician.

2.4.5.5 Anti-Condensation Heater

a. Provide an anti-condensation heater in the control panel that is sized based upon the size of the particular pump station's control panel size.

b. Power the heater from the control voltage transformer for three phase pump motor units and from the incoming power for single phase pump motor units.

c. Control the heater by a thermostat, coming on at 50 degree F and going off at 65 degree F.

d. Clearly label panel directory for breakers.

2.4.5.6 Additional Requirements

a. Provide elapsed time meter for each pump that measures run time in hours to 9999.9.

b. Do not place junction boxes between pumps, control systems and control panels; provide conduit seals at all wet well penetrations.

2.4.6 Electrical Requirements

Install labels to identify switches and controls. Provide internal wiring for components of packaged equipment as an integral part of the equipment. Provide power wiring and conduit for field installed equipment.

2.5 WET WELL

2.5.1 Wet Well and Valve Vault

Provide a precast concrete wet well; include a separate precast concrete valve vault. Provide a wet well and valve vault with inside diameters as indicated and to the depths indicated on the drawings.

Construct precast concrete structures in accordance iwth ASTM C478, except as specified herein. Provide precast concrete structures with a

comprehensive strength of 4000 psi at 28 days and an air entrainment of 6 percent, plus or minus 2 percent, and a minimum wall thickness of 5 inches. ASTM A615/A615M reinforcing bars. ASTM C443, Type B gaskets for joint connections. Use monolithic base and first riser.

2.5.2 Access Hatch Covers

Provide aluminum traffic rated H20 access hatch covers as indicated. Include lifting mechanism, automatic hold open arm, slam lock with handle, and flush lift handle with vinyl grip. Use automatic hold open arm that locks in the 90 degree position. Use cover that is diamond plate with channel frame and continuous anchor flange. Provide stainless steel cylinder lock with two keys per lock. Key all the locks the same.

2.5.3 Wet Well Base Material

Provide crushed stone as indicated.

2.6 STATION PIPING

Provide pressure piping, and related accessories for force main piping outside the sewage wet well and valve vault in accordance with Section 33 30 00 SANITARY SEWERAGE.

2.6.1 PVC Plastic Pressure Pipe and Associated Fittings

2.6.1.1 Pipe and Fittings Less Than 4 inch Diameter

Use pipe, couplings and fittings manufactured of materials conforming to ASTM D1784, Class 12454-B.

a. Screw-Joint: Follow dimensional requirements of ASTM D1785 Schedule 80 pipe, with joints meeting requirements of 150 psi working pressure, 200 psi hydrostatic test pressure, unless otherwise shown or specified. Follow ASTM D2464 and ASME B1.20.1 for use with Schedule 80 threaded pipe and fittings. Test pipe couplings when used, as required by ASTM D2464.

b. Push-On Joint: ASTM D3139, with ASTM F477 gaskets. Fittings for push-on joints: AWWA C110/A21.10 or AWWA C111/A21.11. Iron fittings and specials: cement-mortar lined (standard thickness) in accordance with AWWA C104/A21.4.

c. Solvent Cement Joint: Use pipe that matches the dimensional requirements of ASTM D1785 or ASTM D2241 with joints meeting the requirements of 150 psi working pressure and 200 psi hydrostatic test pressure. Use fittings for solvent cement jointing that match the requirements of ASTM D2466 or ASTM D2467.

2.6.2 Accessories

Provide flanges, connecting pieces, transition glands, transition sleeves, and other adapters as required.

2.6.3 Flexible Flanged Coupling

Provide flexible flanged couplings applicable for sewage as indicated. Use flexible flanged coupling designed for a working pressure of 350 psi.

2.7 VALVES AND OTHER PIPING ACCESSORIES

2.7.1 Isolation Valves

2.7.1.1 Valves 2 Inches and Smaller

Gate valves conforming to MSS SP-80 with non-rising stems and threaded ends.

Ball valves with PTFE seats and seals, brass body and end cups, chrome plated brass ball and screwed ends.

2.7.2 Check Valves Less Than 4 inch Diameter

Neoprene ball check valve with integral hydraulic sealing flange, designed for a hydraulic working pressure of 175 psi.

2.7.3 Identification Tags and Plates

Provide the manufacturer's name or trademark on a corrosion-resistant identification plate or cast integrally, stamped, or otherwise permanently marked in a conspicuous place on each item of equipment. Include on the pump identification plate the pump capacity in gpm, pump head in feet and speed of rotation. Cast on the body of the pump the direction of rotation.

2.7.4 Pipe Support

Use pipe support schedule 40 galvanized steel piping matching ASTM A53/A53M. Provide either ASME B16.3 or ASME B16.11 galvanized threaded fittings.

2.7.5 Miscellaneous Metals

Use stainless steel bolts, nuts, washers, anchors, and supports for installation of equipment.

2.7.6 Quick Disconnect System with Hydraulic Sealing Flange and Rail System

Use quick disconnect system consisting of a steel base plate for supporting the pumps, a hydraulic sealing flange, pump guide rails and the discharge pipe supports. Provide stainless steel guide rails, brackets and lifting chain for raising and lowering the pump in the basin. Build guides onto pump housing to fit the guide post to assure perfect alignment between pump and guide rails.

PART 3 EXECUTION

3.1 INSTALLATION

Provide pump station in accordance with drawings and requirements of the respective equipment manufacturers. Dampen and isolate equipment vibration.

3.1.1 Equipment Installation

Install equipment in accordance with these specifications and the manufacturer's installation instructions. Grout equipment mounted on concrete foundations before installing piping. Install piping to avoid imposing stress on equipment. Match flanges before securing bolts.

3.1.2 Installation of PVC Plastic Pressure Pipe and Fittings

Unless otherwise specified, install pipe and fittings in accordance with the paragraph GENERAL REQUIREMENTS FOR INSTALLATION OF PIPELINES of Section 33 30 00 SANITARY SEWERAGE, with the recommendations for pipe joint assembly and appurtenance installation in AWWA M23, "Installation."

3.1.2.1 Pipe Less than 4 Inch Diameter:

a. Make threaded joints by wrapping the male threads with joint tape or by applying an approved thread lubricant, then threading the joining members together. Tighten joints with strap wrenches that will not damage the pipe and fittings. Do not tighten joint more than 2 threads past hand-tight.

b. Push-On Joints: Bevel ends of pipe for push-on joints to facilitate assembly. Mark pipe to indicate when the pipe is fully seated. Lubricate gasket to prevent displacement. Ensure that the gasket remains in position in the bell or coupling while making the joint.

c. Solvent-weld joints: Comply with the manufacturer's instructions.

3.1.3 Valves

Make and assemble joints to gate valves and check valves as specified for making and assembling the same type joints between pipe and fittings.

3.1.4 Miscellaneous

Attach a plactic laminated final as-built controls drawing to the inside of the front door. Include a list of all legends. Identify the pump nameplate data on the drawing and on the as-built plans.

Permanently mark all component parts in the control panel and identified as they are indicated on the drawing. Mark on the back plate adjacent to the component. Identify all control conductors with wire markers at each end as close as practical to the end of conductor.

3.2 FIELD QUALITY CONTROL

Provide appliances, materials, water, and equipment for testing, and bear full expenses in connection with the testing. Conduct testing after equipment, electrical services, and piping are installed, and the pump station is ready for operation. Correct defects discovered to the satisfaction of the Contracting Officer, and tests repeated, at no expense to the Government, until the equipment functions as intended and designed.

3.2.1 Testing Procedure

Perform a pump test. Submit the test results to the Contracting Officer.

Test all panels to the power requirements as shown on the plans to assure proper component operation. Activate each control function to check for proper operation and indication.

3.2.2 Field Representative

A representative of the pump manufacturer shall direct the startup of the station and instruct representatives of the Government in startup and

operation procedures.

3.3 CLOSEOUT ACTIVITIES

3.3.1 Operation and Maintenance

Submit operation and maintenance manuals including Equipment Description, Assembly and Installation Procedures, Adjustment and Alignment, Checkout Procedures, Procedures of Operation and Troubleshooting. Include preventative maintenance and inspection procedures for package lift stations. Include in procedures the frequency of preventative maintenance, inspection, adjustment, lubrication, and cleaning necessary to minimize corrective maintenance and repair.

-- End of Section --

SECTION 33 82 00

TELECOMMUNICATIONS OUTSIDE PLANT (OSP)

PART 1 GENERAL

1.1 REFERENCES

The publications listed below form a part of this specification to the extent referenced. The publications are referred to within the text by the basic designation only.

ASTM INTERNATIONAL (ASTM)

ASTM B1	(2013) Standard Specification for Hard-Drawn Copper Wire
ASTM B8	(2011; R 2017) Standard Specification for Concentric-Lay-Stranded Copper Conductors, Hard, Medium-Hard, or Soft
ASTM D709	(2017) Standard Specification for Laminated Thermosetting Materials

INSTITUTE OF ELECTRICAL AND ELECTRONICS ENGINEERS (IEEE)

IEEE 100	(2000; Archived) The Authoritative Dictionary of IEEE Standards Terms
IEEE C2	(2017; Errata 1-2 2017; INT 1 2017) National Electrical Safety Code

INSULATED CABLE ENGINEERS ASSOCIATION (ICEA)

ICEA S-87-640	(2016) Optical Fiber Outside Plant Communications Cable; 4th Edition
ICEA S-98-688	(2012) Broadband Twisted Pair Telecommunication Cable, Aircore, Polyolefin Insulated, Copper Conductors Technical Requirements
ICEA S-99-689	(2012) Broadband Twisted Pair Telecommunication Cable Filled, Polyolefin Insulated, Copper Conductors Technical Requirements

NATIONAL FIRE PROTECTION ASSOCIATION (NFPA)

NFPA 70	(2020; ERTA 20-1 2020; ERTA 20-2 2020; TIA 20-1; TIA 20-2; TIA 20-3; TIA 20-4) National Electrical Code

TELECOMMUNICATIONS INDUSTRY ASSOCIATION (TIA)

TIA-455-78-B	(2020c) FOTP-78 Optical Fibres - Part 1-40: Measurement Methods and Test

	Procedures - Attenuation
TIA-472D000	(2007b) Fiber Optic Communications Cable for Outside Plant Use
TIA-492CAAA	(1998; R 2002) Detail Specification for Class IVa Dispersion-Unshifted Single-Mode Optical Fibers
TIA-526-7	(2015a) OFSTP-7 Measurement of Optical Power Loss of Installed Single-Mode Fiber Cable Plant
TIA-526-14	(2015c) OFSTP-14A Optical Power Loss Measurements of Installed Multimode Fiber Cable Plant
TIA-568.1	(2020e) Commercial Building Telecommunications Infrastructure Standard
TIA-568.2	(2018d) Balanced Twisted-Pair Telecommunications Cabling and Components Standards
TIA-568.3	(2016d; Add 1 2019) Optical Fiber Cabling Components Standard
TIA-569	(2019e) Telecommunications Pathways and Spaces
TIA-606	(2021d) Administration Standard for Telecommunications Infrastructure
TIA-607	(2019d) Generic Telecommunications Bonding and Grounding (Earthing) for Customer Premises
TIA-758	(2012b) Customer-Owned Outside Plant Telecommunications Infrastructure Standard
TIA/EIA-455	(1998b) Standard Test Procedure for Fiber Optic Fibers, Cables, Transducers, Sensors, Connecting and Terminating Devices, and Other Fiber Optic Components
TIA/EIA-455-204	(2000) Standard for Measurement of Bandwidth on Multimode Fiber
TIA/EIA-598	(2014D; Add 2 2018) Optical Fiber Cable Color Coding

U.S. DEPARTMENT OF AGRICULTURE (USDA)

RUS 1755	Telecommunications Standards and Specifications for Materials, Equipment and Construction
RUS Bull 1751F-630	(1996) Design of Aerial Plant

RUS Bull 1751F-643	(2002) Underground Plant Design
RUS Bull 1751F-815	(1979) Electrical Protection of Outside Plant
RUS Bull 1753F-201	(1997) Acceptance Tests of Telecommunications Plant (PC-4)

UNDERWRITERS LABORATORIES (UL)

UL 83	(2017; Reprint Mar 2020) UL Standard for Safety Thermoplastic-Insulated Wires and Cables
UL 510	(2020) UL Standard for Safety Polyvinyl Chloride, Polyethylene and Rubber Insulating Tape

1.2 RELATED REQUIREMENTS

Section 27 10 00, BUILDING TELECOMMUNICATIONS CABLING SYSTEM.

1.3 DEFINITIONS

Unless otherwise specified or indicated, electrical and electronics terms used in this specification shall be as defined in TIA-568.1, TIA-568.2, TIA-568.3, TIA-569, TIA-606, and IEEE 100 and herein.

1.3.1 Campus Distributor (CD)

A distributor from which the campus backbone cabling emanates. (International expression for main cross-connect - (MC).)

1.3.2 Entrance Facility (EF) (Telecommunications)

An entrance to the building for both private and public network service cables (including antennae) including the entrance point at the building wall and continuing to the entrance room or space.

1.3.3 Building Distributor (BD)

A distributor in which the building backbone cables terminate and at which connections to the campus backbone cables may be made. (International expression for intermediate cross-connect - (IC).)

1.3.4 Pathway

A physical infrastructure utilized for the placement and routing of telecommunications cable.

1.4 SYSTEM DESCRIPTION

The telecommunications outside plant consists of cable, conduit, manholes, poles, etc. required to provide signal paths from the closest point of presence to the new facility, including free standing frames or backboards, interconnecting hardware, terminating cables, lightning and surge protection modules at the entrance facility. The work consists of providing, testing and making operational cabling, interconnecting hardware and lightning and surge protection necessary to form a complete

outside plant telecommunications system for continuous use.

1.5 SUBMITTALS

Government approval is required for submittals with a "G" or "S" classification. Submittals not having a "G" or "S" classification are for Contractor Quality Control approval. Submit the following in accordance with Section 01 33 00 SUBMITTAL PROCEDURES:

SD-02 Shop Drawings

Telecommunications Outside Plant; G

Telecommunications Entrance Facility Drawings; G

In addition to Section 01 33 00 SUBMITTAL PROCEDURES, provide shop drawings in accordance with paragraph SHOP DRAWINGS.

SD-03 Product Data

Wire and Cable; G

Submittals shall include the manufacturer's name, trade name, place of manufacture, and catalog model or number. Submittals shall also include applicable federal, military, industry, and technical society publication references. Should manufacturer's data require supplemental information for clarification, the supplemental information shall be submitted as specified in paragraph REGULATORY REQUIREMENTS and as required for certificates in Section 01 33 00 SUBMITTAL PROCEDURES.

SD-06 Test Reports

Acceptance Tests; G

Outside Plant Test Plan; G

SD-07 Certificates

Telecommunications Contractor Qualifications; G

Key Personnel Qualifications; G

Minimum Manufacturer's Qualifications; G

SD-09 Manufacturer's Field Reports

Factory Reel Test Data; G

SD-10 Operation and Maintenance Data

Telecommunications Outside Plant (OSP), Data Package 5; G

Commercial off-the-shelf manuals shall be provided for operation, installation, configuration, and maintenance of products provided as a part of the telecommunications outside plant (OSP). Submit operations and maintenance data in accordance with Section 01 78 23, OPERATION AND MAINTENANCE DATA and as specified herein not later

than 2 months prior to the date of beneficial occupancy. In addition to requirements of Data package 5, include the requirements of paragraphs TELECOMMUNICATIONS OUTSIDE PLANT SHOP DRAWINGS and TELECOMMUNICATIONS ENTRANCE FACILITY DRAWINGS.

SD-11 Closeout Submittals

Record Documentation; G

In addition to other requirements, provide in accordance with paragraph RECORD DOCUMENTATION.

1.6 QUALITY ASSURANCE

1.6.1 Shop Drawings

Include wiring diagrams and installation details of equipment indicating proposed location, layout and arrangement, control panels, accessories, piping, ductwork, and other items that must be shown to ensure a coordinated installation. Wiring diagrams shall identify circuit terminals and indicate the internal wiring for each item of equipment and the interconnection between each item of equipment. Drawings shall indicate adequate clearance for operation, maintenance, and replacement of operating equipment devices. Submittals shall include the nameplate data, size, and capacity. Submittals shall also include applicable federal, military, industry, and technical society publication references.

1.6.1.1 Telecommunications Outside Plant Shop Drawings

Provide Outside Plant Design in accordance with TIA-758, RUS Bull 1751F-630 for aerial system design, and RUS Bull 1751F-643 for underground system design. Provide T0 shop drawings that show the physical and logical connections from the perspective of an entire campus, such as actual building locations, exterior pathways and campus backbone cabling on plan view drawings, major system nodes, and related connections on the logical system drawings in accordance with TIA-606. Drawings shall include wiring and schematic diagrams for fiber optic and copper cabling and splices, copper conductor gauge and pair count, fiber pair count and type, pathway duct and innerduct arrangement, associated construction materials, and any details required to demonstrate that cable system has been coordinated and will properly support the switching and transmission system identified in specification and drawings. Provide Registered Communications Distribution Designer (RCDD) approved drawings of the telecommunications outside plant. The telecommunications outside plant (OSP) shop drawings shall be included in the operation and maintenance manuals.

1.6.1.2 Telecommunications Entrance Facility Drawings

Provide T3 drawings for EF Telecommunications as specified in the paragraph TELECOMMUNICATIONS SPACE DRAWINGS of Section 27 10 00 BUILDING TELECOMMUNICATIONS CABLING SYSTEMS. The telecommunications entrance facility shop drawings shall be included in the operation and maintenance manuals.

1.6.2 Telecommunications Qualifications

Work under this section shall be performed by and the equipment shall be provided by the approved telecommunications contractor and key personnel. Qualifications shall be provided for: the telecommunications system

contractor, the telecommunications system installer, the supervisor (if different from the installer), and the cable splicing and terminating personnel. A minimum of 30 days prior to installation, submit documentation of the experience of the telecommunications contractor and of the key personnel.

1.6.2.1 Telecommunications Contractor Qualifications

The telecommunications contractor shall be a firm which is regularly and professionally engaged in the business of the applications, installation, and testing of the specified telecommunications systems and equipment. The telecommunications contractor shall demonstrate experience in providing successful telecommunications systems that include outside plant and broadband cabling within the past 3 years. Submit documentation for a minimum of three and a maximum of five successful telecommunication system installations for the telecommunications contractor. Each of the key personnel shall demonstrate experience in providing successful telecommunications systems in accordance with TIA-758 within the past 3 years.

1.6.2.2 Key Personnel Qualifications

Provide key personnel who are regularly and professionally engaged in the business of the application, installation and testing of the specified telecommunications systems and equipment. There may be one key person or more key persons proposed for this solicitation depending upon how many of the key roles each has successfully provided. Each of the key personnel shall demonstrate experience in providing successful telecommunications systems within the past 3 years.

Cable splicing and terminating personnel assigned to the installation of this system or any of its components shall have training in the proper techniques and have a minimum of 3 years experience in splicing and terminating the specified cables. Modular splices shall be performed by factory certified personnel or under direct supervision of factory trained personnel for products used.

Supervisors and installers assigned to the installation of this system or any of its components shall have factory or factory approved certification from each equipment manufacturer indicating that they are qualified to install and test the provided products.

Submit documentation for a minimum of three and a maximum of five successful telecommunication system installations for each of the key personnel. Documentation for each key person shall include at least two successful system installations provided that are equivalent in system size and in construction complexity to the telecommunications system proposed for this solicitation. Include specific experience in installing and testing telecommunications outside plant systems, including broadband cabling, and provide the names and locations of at least two project installations successfully completed using optical fiber and copper telecommunications cabling systems. All of the existing telecommunications system installations offered by the key persons as successful experience shall have been in successful full-time service for at least 18 months prior to the issuance date for this solicitation. Provide the name and role of the key person, the title, location, and completed installation date of the referenced project, the referenced project owner point of contact information including name, organization, title, and telephone number, and generally, the referenced project

description including system size and construction complexity.

Indicate that all key persons are currently employed by the telecommunications contractor, or have a commitment to the telecommunications contractor to work on this project. All key persons shall be employed by the telecommunications contractor at the date of issuance of this solicitation, or if not, have a commitment to the telecommunications contractor to work on this project by the date that the bid was due to the Contracting Officer.

Note that only the key personnel approved by the Contracting Officer in the successful proposal shall do work on this solicitation's telecommunications system. Key personnel shall function in the same roles in this contract, as they functioned in the offered successful experience. Any substitutions for the telecommunications contractor's key personnel requires approval from The Contracting Officer.

1.6.2.3 Minimum Manufacturer's Qualifications

Cabling, equipment and hardware manufacturers shall have a minimum of 3 years experience in the manufacturing, assembly, and factory testing of components which comply with, TIA-568.1, TIA-568.2 and TIA-568.3. In addition, cabling manufacturers shall have a minimum of 3 years experience in the manufacturing and factory testing of cabling which comply with ICEA S-87-640, ICEA S-98-688, and ICEA S-99-689.

1.6.3 Outside Plant Test Plan

Prepare and provide a complete and detailed test plan for field tests of the outside plant including a complete list of test equipment for the copper conductor and optical fiber cables, components, and accessories for approval by the Contracting Officer. Include a cut-over plan with procedures and schedules for relocation of facility station numbers without interrupting service to any active location. Submit the plan at least 30 days prior to tests for Contracting Officer approval. Provide outside plant testing and performance measurement criteria in accordance with TIA-568.1 and RUS Bull 1753F-201. Include procedures for certification, validation, and testing that includes fiber optic link performance criteria.

1.6.4 Standard Products

Provide materials and equipment that are standard products of manufacturers regularly engaged in the production of such products which are of equal material, design and workmanship and shall be the manufacturer's latest standard design that has been in satisfactory commercial or industrial use for at least 2 years prior to bid opening. The 2-year period shall include applications of equipment and materials under similar circumstances and of similar size. The product shall have been on sale on the commercial market through advertisements, manufacturers' catalogs, or brochures during the 2-year period. Products supplied shall be specifically designed and manufactured for use with outside plant telecommunications systems. Where two or more items of the same class of equipment are required, these items shall be products of a single manufacturer; however, the component parts of the item need not be the products of the same manufacturer unless stated in this section.

1.6.4.1 Alternative Qualifications

Products having less than a 2-year field service record will be acceptable if a certified record of satisfactory field operation for not less than 6000 hours, exclusive of the manufacturers' factory or laboratory tests, is provided.

1.6.4.2 Material and Equipment Manufacturing Date

Products manufactured more than 3 years prior to date of delivery to site shall not be used, unless specified otherwise.

1.6.5 Regulatory Requirements

In each of the publications referred to herein, consider the advisory provisions to be mandatory, as though the word, "shall" had been substituted for "should" wherever it appears. Interpret references in these publications to the "authority having jurisdiction," or words of similar meaning, to mean the Contracting Officer. Equipment, materials, installation, and workmanship shall be in accordance with the mandatory and advisory provisions of NFPA 70 unless more stringent requirements are specified or indicated.

1.6.5.1 Independent Testing Organization Certificate

In lieu of the label or listing, submit a certificate from an independent testing organization, competent to perform testing, and approved by the Contracting Officer. The certificate shall state that the item has been tested in accordance with the specified organization's test methods and that the item complies with the specified organization's reference standard.

1.7 DELIVERY, STORAGE, AND HANDLING

Ship cable on reels in 500 feet length with a minimum overage of 10 percent. Radius of the reel drum shall not be smaller than the minimum bend radius of the cable. Wind cable on the reel so that unwinding can be done without kinking the cable. Two meters of cable at both ends of the cable shall be accessible for testing. Attach permanent label on each reel showing length, cable identification number, cable size, cable type, and date of manufacture. Provide water resistant label and the indelible writing on the labels. Apply end seals to each end of the cables to prevent moisture from entering the cable. Reels with cable shall be suitable for outside storage conditions when temperature ranges from minus 40 degrees C to plus 65 degrees C, with relative humidity from 0 to 100 percent. Equipment, other than cable, delivered and placed in storage shall be stored with protection from weather, humidity and temperature variation, dirt and dust, or other contaminants in accordance with manufacturer's requirements.

1.8 MAINTENANCE

1.8.1 Record Documentation

Provide the activity responsible for telecommunications system maintenance and administration a single complete and accurate set of record documentation for the entire telecommunications system with respect to this project.

Provide record documentation as specified in Section 27 10 00 BUILDING TELECOMMUNICATIONS CABLING SYSTEM.

1.9 WARRANTY

The equipment items shall be supported by service organizations which are reasonably convenient to the equipment installation in order to render satisfactory service to the equipment on a regular and emergency basis during the warranty period of the contract.

PART 2 PRODUCTS

2.1 MATERIALS AND EQUIPMENT

Products supplied shall be specifically designed and manufactured for use with outside plant telecommunications systems.

2.2 TELECOMMUNICATIONS ENTRANCE FACILITY

2.2.1 Building Protector Assemblies

PRefer to Section 27 10 00 BUILDING TELECOMMUNICATIONS CABLING SYSTEM for requirements.

2.2.2 Protector Modules

Refer to Section 27 10 00 BUILDING TELECOMMUNICATIONS CABLING SYSTEM for requirements.

2.2.3 Fiber Optic Terminations

Provide fiber optic cable terminations as specified in 27 10 00 BUILDING TELECOMMUNICATIONS CABLING SYSTEM.

2.3 CONDUIT

Provide conduit as specified in Section 26 27 29 MARINA ELECTRICAL WORK.

2.4 PLASTIC INSULATING TAPE

UL 510.

2.5 WIRE AND CABLE

2.5.1 Fiber Optic Cable

Provide single-mode, 8/125-um, 0.10 aperture 1310 nm fiber optic cable in accordance with TIA-492CAAA, TIA-472D000, and ICEA S-87-640 including any special requirements made necessary by a specialized design. Provide 12 optical fibers. Fiber optic cable shall be specifically designed for outside use with loose buffer construction. Provide fiber optic color code in accordance with TIA/EIA-598

2.5.1.1 Strength Members

Provide central, metallic strength members with sufficient tensile strength for installation and residual rated loads to meet the applicable performance requirements in accordance with ICEA S-87-640. The strength member is included to serve as a cable core foundation to reduce strain on

the fibers, and shall not serve as a pulling strength member.

2.5.1.2 Performance Requirements

Provide fiber optic cable with optical and mechanical performance requirements in accordance with ICEA S-87-640.

2.5.2 Grounding and Bonding Conductors

Provide grounding and bonding conductors in accordance with RUS 1755.200, TIA-607, IEEE C2, and NFPA 70. Solid bare copper wire meeting the requirements of ASTM B1 for sizes No. 8 AWG and smaller and stranded bare copper wire meeting the requirements of ASTM B8, for sizes No. 6 AWG and larger. Insulated conductors shall have 600-volt, Type TW insulation meeting the requirements of UL 83.

2.6 CABLE TAGS IN HANDHOLES

Provide tags for each telecommunications cable or wire located in handholes. Cable tags shall be stainless steel or polyethylene and labeled in accordance with TIA-606. Handwritten labeling is unacceptable.

2.6.1 Stainless Steel

Provide stainless steel, cable tags 1 5/8 inches in diameter 1/16 inch thick minimum, and circular in shape. Tags shall be die stamped with numbers, letters, and symbols not less than 0.25 inch high and approximately 0.015 inch deep in normal block style.

2.6.2 Polyethylene Cable Tags

Provide tags of polyethylene that have an average tensile strength of 3250 pounds per square inch; and that are 0.08 inch thick (minimum), non-corrosive non-conductive; resistive to acids, alkalis, organic solvents, and salt water; and distortion resistant to 170 degrees F. Provide 0.05 inch (minimum) thick black polyethylene tag holder. Provide a one-piece nylon, self-locking tie at each end of the cable tag. Ties shall have a minimum loop tensile strength of 175 pounds. The cable tags shall have black block letters, numbers, and symbols one inch high on a yellow background. Letters, numbers, and symbols shall not fall off or change positions regardless of the cable tags' orientation.

2.7 GROUNDING BRAID

Provide grounding braid that provides low electrical impedance connections for dependable shield bonding in accordance with RUS 1755.200. Braid shall be made from flat tin-plated copper.

2.8 MANUFACTURER'S NAMEPLATE

Each item of equipment shall have a nameplate bearing the manufacturer's name, address, model number, and serial number securely affixed in a conspicuous place; the nameplate of the distributing agent will not be acceptable.

2.9 FIELD FABRICATED NAMEPLATES

Provide laminated plastic nameplates in accordance with ASTM D709 for each patch panel, protector assembly, rack, cabinet and other equipment or as

indicated on the drawings. Each nameplate inscription shall identify the function and, when applicable, the position. Nameplates shall be melamine plastic, 0.125 inch thick, white with black center core. Surface shall be matte finish. Corners shall be square. Accurately align lettering and engrave into the core. Minimum size of nameplates shall be one by 2.5 inches. Lettering shall be a minimum of 0.25 inch high normal block style.

2.10 TESTS, INSPECTIONS, AND VERIFICATIONS

2.10.1 Factory Reel Test Data

Test 100 percent OTDR test of FO media at the factory in accordance with TIA-568.1 and TIA-568.3. Use TIA-526-7 for single mode fiber and TIA-526-14Method B for multi mode fiber measurements. Calibrate OTDR to show anomalies of 0.2 dB minimum. Submit test reports, including manufacture date for each cable reel and receive approval before delivery of cable to the project site.

PART 3 EXECUTION

3.1 INSTALLATION

Install all system components and appurtenances in accordance with manufacturer's instructions IEEE C2, NFPA 70, and as indicated. Provide all necessary interconnections, services, and adjustments required for a complete and operable telecommunications system.

3.1.1 Contractor Damage

Promptly repair indicated utility lines or systems damaged during site preparation and construction. Damages to lines or systems not indicated, which are caused by Contractor operations, shall be treated as "Changes" under the terms of the Contract Clauses. When Contractor is advised in writing of the location of a nonindicated line or system, such notice shall provide that portion of the line or system with "indicated" status in determining liability for damages. In every event, immediately notify the Contracting Officer of damage.

3.1.2 Cable Inspection and Repair

Handle cable and wire provided in the construction of this project with care. Inspect cable reels for cuts, nicks or other damage. Damaged cable shall be replaced or repaired to the satisfaction of the Contracting Officer. Reel wraps shall remain intact on the reel until the cable is ready for placement.

3.1.3 Direct Burial System

3.1.3.1 Cable Placement

a. Cables shall be in one piece without splices between connections except where the distance exceeds the lengths in which the cable is furnished.

b. Avoid bends in cables of small radii and twists that might cause damage. Do not bend cable and wire in a radius less than 10 times the outside diameter of the cable or wire.

c. Leave a horizontal slack of approximately 3 feet on each end of cable

runsand at points where connections are brought aboveground. Where cable is brought aboveground, leave additional slack to make necessary connections.

3.1.4 Penetrations

Caulk and seal cable access penetrations in walls, ceilings and other parts of the building.

3.1.5 Cable Pulling

Test duct lines with a mandrel and swab out to remove foreign material before the pulling of cables. Avoid damage to cables in setting up pulling apparatus or in placing tools or hardware. Do not step on cables when entering or leaving the manhole. Do not place cables in ducts other than those shown without prior written approval of the Contracting Officer. Roll cable reels in the direction indicated by the arrows painted on the reel flanges. Set up cable reels on the same side of the manhole as the conduit section in which the cable is to be placed. Level the reel and bring into proper alignment with the conduit section so that the cable pays off from the top of the reel in a long smooth bend into the duct without twisting. Under no circumstances shall the cable be paid off from the bottom of a reel. Check the equipment set up prior to beginning the cable pulling to avoid an interruption once pulling has started. Use a cable feeder guide of suitable dimensions between cable reel and face of duct to protect cable and guide cable into the duct as it is paid off the reel. As cable is paid off the reel, lubricate and inspect cable for sheath defects. When defects are noticed, stop pulling operations and notify the Contracting Officer to determine required corrective action. Cable pulling shall also be stopped when reel binds or does not pay off freely. Rectify cause of binding before resuming pulling operations. Provide cable lubricants recommended by the cable manufacturer. Avoid bends in cables of small radii and twists that might cause damage. Do not bend cable and wire in a radius less than 10 times the outside diameter of the cable or wire.

3.1.5.1 Cable Tensions

Obtain from the cable manufacturer and provide to the Contracting Officer, the maximum allowable pulling tension. This tension shall not be exceeded.

3.1.5.2 Pulling Eyes

Equip cables 1.25 inches in diameter and larger with cable manufacturer's factory installed pulling-in eyes. Provide cables with diameter smaller than 1.25 inches with heat shrinkable type end caps or seals on cable ends when using cable pulling grips. Rings to prevent grip from slipping shall not be beaten into the cable sheath. Use a swivel of 3/4 inch links between pulling-in eyes or grips and pulling strand.

3.1.6 Surge Protection

All cables and conductors, except fiber optic cable, which serve as communication lines through off-premise lines, shall have surge protection installed at each end which meet the requirements of RUS Bull 1751F-815.

3.1.7 Grounding

Provide grounding and bonding in accordance with RUS 1755.200, TIA-607,

IEEE C2, and NFPA 70. Ground exposed noncurrent carrying metallic parts of telephone equipment, cable sheaths, cable splices, and terminals.

3.1.7.1 Telecommunications Master Ground Bar (TMGB)

The TMGB is the hub of the basic telecommunications grounding system providing a common point of connection for ground from outside cable, CD, and equipment. Establish a TMGB for connection point for cable stub shields to connector blocks and CD protector assemblies as specified in Section 26 20 00 INTERIOR DISTRIBUTION SYSTEM.

3.1.7.2 Incoming Cable Shields

Shields shall not be bonded across the splice to the cable stubs. Ground shields of incoming cables in the EF Telecommunications to the TMGB.

3.1.7.3 Campus Distributor Grounding

a. Protection assemblies: Mount CD protector assemblies directly in the telecommunications cabinet. Connect assemblies mounted on each vertical frame with No. 6 AWG copper conductor to provide a low resistance path to TMGB.

3.2 LABELING

3.2.1 Labels

Provide labeling for new cabling and termination hardware located within the facility in accordance with TIA-606. Handwritten labeling is unacceptable. Stenciled lettering for cable and termination hardware shall be provided using thermal ink transfer process.

3.2.2 Cable Tag Installation

Install cable tags for each telecommunications cable or wire located in manholes, handholes, and vaults including each splice. Tag only new wire and cable provided by this contract. The labeling of telecommunications cable tag identifiers shall be in accordance with TIA-606. Do not provide handwritten letters. Install cable tags so that they are clearly visible without disturbing any cabling or wiring in the manholes, handholes, and vaults.

3.2.3 Termination Hardware

Label patch panels, distribution panels, connector blocks and protection modules using color coded labels with identifiers in accordance with TIA-606.

3.3 FIELD FABRICATED NAMEPLATE MOUNTING

Provide number, location, and letter designation of nameplates as indicated. Fasten nameplates to the device with a minimum of two sheet-metal screws or two rivets.

3.4 FIELD QUALITY CONTROL

Provide the Contracting Officer 10 working days notice prior to each test. Provide labor, equipment, and incidentals required for testing. Correct defective material and workmanship disclosed as the results of the

tests. Furnish a signed copy of the test results to the Contracting Officer within 3 working days after the tests for each segment of construction are completed. Perform testing as construction progresses and do not wait until all construction is complete before starting field tests.

3.4.1 Acceptance Tests

Perform acceptance testing in accordance with RUS Bull 1753F-201 and as further specified in this section. Provide personnel, equipment, instrumentation, and supplies necessary to perform required testing. Notification of any planned testing shall be given to the Contracting Officer at least 14 days prior to any test unless specified otherwise. Testing shall not proceed until after the Contractor has received written Contracting Officer's approval of the test plans as specified. Test plans shall define the tests required to ensure that the system meets technical, operational, and performance specifications. The test plans shall define milestones for the tests, equipment, personnel, facilities, and supplies required. The test plans shall identify the capabilities and functions to be tested. Provide test reports in booklet form showing all field tests performed, upon completion and testing of the installed system. Measurements shall be tabulated on a pair by pair or strand by strand basis.

3.4.1.1 Fiber Optic Cable

Test fiber optic cable in accordance with TIA/EIA-455 and as further specified in this section. Two optical tests shall be performed on all optical fibers: Optical Time Domain Reflectometry (OTDR) Test, and Attenuation Test. In addition, a Bandwidth Test shall be performed on all multimode optical fibers. These tests shall be performed on the completed end-to-end spans which include the near-end pre-connectorized single fiber cable assembly, outside plant as specified, and the far-end pre-connectorized single fiber cable assembly.

a. OTDR Test: The OTDR test shall be used to determine the adequacy of the cable installations by showing any irregularities, such as discontinuities, micro-bendings or improper splices for the cable span under test. Hard copy fiber signature records shall be obtained from the OTDR for each fiber in each span and shall be included in the test results. The OTDR test shall be measured in both directions. A reference length of fiber, 66 feet minimum, used as the delay line shall be placed before the new end connector and after the far end patch panel connectors for inspection of connector signature. Conduct OTDR test and provide calculation or interpretation of results in accordance with TIA-526-7 for single-mode fiber and TIA-526-14 for multimode fiber. Splice losses shall not exceed 0.3 db.

b. Attenuation Test: End-to-end attenuation measurements shall be made on all fibers, in both directions, using a 1300 nanometer light source at one end and the optical power meter on the other end to verify that the cable system attenuation requirements are met in accordance with TIA-526-7 for single-mode fiber optic cables. The measurement method shall be in accordance with TIA-455-78-B. Attenuation losses shall not exceed 0.5 db/km at 1310 nm and 1550 nm for single-mode fiber. Attenuation losses shall not exceed 5.0 db/km at 850 nm and 1.5 db/km at 1300 nm for multimode fiber.

c. Bandwidth Test: The end-to-end bandwidth of all multimode fiber span

links shall be measured by the frequency domain method. The bandwidth shall be measured in both directions on all fibers. The bandwidth measurements shall be in accordance with TIA/EIA-455-204.

-- End of Section --

SECTION 35 20 23

DREDGING

PART 1 GENERAL

The work of this section includes Contractor's operations for dredging at City Pier, New London, CT with upland disposal.

1.1 DEFINITION

Hard material is defined as material requiring blasting or the use of special equipment for removal, and includes large boulders and or fragments too large to be removed in one piece by the dredge plant. Boulders and rock fragments less than 2 tons in weight are not considered hard material. The dredge plant must be capable of removing boulders and rock fragments up to 2 tons in weight and hard pan clay.

1.2 SUBMITTALS

Government approval is required for submittals with a "G" designation; submittals not having a "G" designation are for Contractor Quality Control approval. The following shall be submitted in accordance with Section 01 33 00 SUBMITTAL PROCEDURES:

SD-01 Preconstruction Submittals

Construction Operations Plan; G

Pre-dredge Hydrographic Survey; G

Letter of Acceptance of Government's Pre-Dredge Hydrographic Survey and associated dredge volumes; G

SD-11 Closeout Submittals

Post Dredge Hydrographic Survey; G

Approved Manifest; G

SD-07 Certificates

Notice to Fishermen and Mariners; G

1.3 MATERIAL TO BE REMOVED

The material to be removed is generally sand, silt, and clay, however gravel, cobbles, and, artificial obstructions, should also be expected.

Laboratory results and gradation reports for each of the samples is attached at the end of this specification. It should be noted that dredge material greater than 2" in size was not collected in the 2" diameter vibrocores/gradation testing, but is expected to be found in the dredge material.

1.3.1 Hard Material

The removal of hard material is not included. Should the Government direct

in writing that hard material be removed, the work shall be performed and an adjustment in the contract price or time for completion, or both, will be made in accordance with "FAR 52.236-2, Differing Site Conditions." If hard material is to be removed, blasting will not be permitted.

If Contractor encounters hard material within the design dredge depths, Contractor shall show to the Government's satisfaction that the material is not excavatable by the equipment used for this project, and shall identify the limits and elevations of the hard material as directed, at no additional cost to the Government.

Hard material for this project is defined as bedrock. The Contractor shall anticipate hard pan clay and have equipment suitable for its removal.

1.3.2 Artificial Obstructions

Other than the cable shown on the plans and possible buried fender piles, the Government has no knowledge of existing ordnance, wrecks, wreckage, or other material of such size or character as to require the use of explosives or special or additional plant for its safe removal. Artificial obstructions excavated from the dredged area shall be placed in the dewatering area separate from the dredge materials, and shall be rinsed for review by the Government. All artificial obstructions shall become the property of the Contractor unless otherwise directed or indicated, and shall be properly disposed of at the end of the project, at no additional cost to the Government.

1.4 QUANTITY OF MATERIAL

1.4.1 General

The total estimated amount of material to be removed from within the specified limits, including side slopes, but excluding overdepths, is 1,825 cubic yards. The maximum amount of allowable overdepth dredging is estimated to be 2,435 cubic yards. The estimated quantity for bidding purposes and for application of the "FAR 52.212-11, Variation in Estimated Quantity" shall be 2,435 cubic yards, which is the total quantity, including overdepth. The quantities listed are estimates only. Within the limits of available funds, complete the work specified whether the quantities involved are greater or less than those estimated.

1.4.2 Overdepth Dredging

To cover unavoidable inaccuracies with the dredging process, material may be removed to a depth of 2 foot below the design dredge depth specified and within the dredging limits.

1.4.3 Side Slopes

Dredging on side slopes shall follow, as closely as practicable, the lines indicated or specified. A one foot allowance will be made for dredging beyond the indicated or specified side slopes, except as provided herein.

1.5 PERMIT

The Contractor shall comply with conditions and requirements of the CT DEEP Permit and other State or Federal permits.

1.6 CT DEEP NOTIFICATION

The Contractor shall notify the CT DEEP of dredge operations and disposal plan. Notification shall include confirmation of disposal site location.

1.7 NOTICE TO FISHERMEN AND MARINERS

Contractor shall publish a notice to fishermen in the Commercial Fisheries News and a notice to mariners via a local marine radio prior to dredging operation. Provide documentation of notification to the Contracting Officer.

1.8 CHARGES

The Contractor shall pay all costs associated with the transportation and disposal of the dredge materials at the upland disposal site.

1.9 ENVIRONMENTAL PROTECTION REQUIREMENTS

Provide and maintain during the life of the contract, environmental protective measures. Also, provide environmental protective measures required to correct conditions, such as oil spills or debris, that occur during the dredging operations. Comply with Federal, State, and local regulations pertaining to water, air, and noise pollution.

1.10 BASIS FOR BIDS

Contractor bids shall be based on the quantity of dredging indicated. Should the total quantity of dredging vary from that specified as the basis for bidding, the contract price will be adjusted in accordance with "FAR 52.243-4, "Changes." The dredging conditions specified and indicated describe conditions which are known. However, the Contractor is responsible for other conditions encountered which are not unusual when compared to the conditions recognized in the dredging business as usual in dredging activities such as those required under this contract.

1.11 CONSTRUCTION OPERATIONS PLAN

Submit a Construction Operations Plan indicating the proposed method by which the dredge work will be conducted. Describe in detail the means by which dredge operations will be conducted so as to avoid damage to benthic resources outside the dredge area. The plan shall include discussion of the following items:

a) Type of dredge equipment to be used throughout the project,
b) Coordination and communication efforts between site personnel to minimize impact to Station operations,
c) Maintaining horizontal and vertical survey control,
d) Proposed means to avoid damage to adjacent structures, vessels, and moorings,
e) Proposed means to avoid dredging beyond the limits,
f) Proposed methods to effectively dispose of all dredge materials,
h) Proposed methods to prevent spillage from barges.

1.12 LAYOUT WORK AND SURVEYS

The Contractor shall employ a licensed surveyor to layout the limits of the work, establish vertical control using approved datums and perform surveys. The Contractor shall provide all buoys, ranges and other

controls necessary to accomplish the work and facilitate inspection.

1.13 PRE-DREDGE HYDROGRAPHIC SURVEY

Prior to commencing work, Contractor shall complete a Pre-dredge Hydrographic Survey to confirm that the Governments Pre-dredge Hydrographic Survey and associated dredge volumes are correct. Hydrographic surveys shall use multi-beam sonar transducers and shall provide 100% bottom coverage including a method to correct for side slope and beam angle error. Survey methodology shall conform to the US Army Corps of Engineers specification EM1110-2-1003, Survey accuracy shall be as follows: horizontal positioning: less than 1 meter; NADIR (vertical): plus or minus 0.15 feet.

The contractor shall submit a Letter of Acceptance of Government's Pre-Dredge Hydrographic Survey and associated dredge volumes shown in the contract drawings.

1.14 MATERIAL SAMPLING AND TESTING

Sampling to characterize the materials has been performed, and laboratory and gradation reports are attached at the end of this specification.

1.15 POST DREDGE HYDROGRAPHIC SURVEY

After completion of all work, the Contractor shall perform a Post-dredge hydrographic Survey throughout the dredge area as specified in Section 1.12. The survey shall be taken within five (5) days after completion of the dredging. A Government representative shall be notified seven (7) days in advance of the scheduled survey and may be on-site during soundings. The survey, corrected to Mean Lower Low Water, shall be in a Government-approved format and shall be forwarded to the Contracting Officer within five (5) days after completion.

1.15.1 Submittals

The Contractor shall submit the information on a computer disk, together with prints of the information. Drawings shall be prepared and/or accessible with AutoCAD 2004 by AutoDesk, Inc. Software.

1.16 MATERIALS TRANSPORTATION

Contractor shall transport materials to upland disposal site and submit Approved Manifest.

1.17 WORK AREA

1.17.1 Protection of Existing Waterways and Shoals

The Contractor shall conduct his operations in such a manner that the material or other debris are not pushed outside of dredging limits or otherwise deposited in existing side channels, basins, docking areas, or other areas being utilized by vessels or moored boats. The Contractor will be required to change his method of operations to comply with the above requirements. Should any bottom material or other debris be pushed into areas described above as a result of the Contractor's operations, the material must be promptly removed.

1.17.2 Adjacent Property and Structures

The Contractor shall conduct the dredging operation such that it does not undermine, weaken, or otherwise impair existing structures located in or near the areas to be dredged. The Contractor shall plan the dredge work accordingly.

Damage to private or public property or structures resulting from the disposal or dredging operations shall be repaired promptly by the Contractor at his expense. Damage to structures resulting from the Contractor's negligence will require prompt repair at the Contractor's expense.

PART 2 PRODUCTS

Not used.

PART 3 EXECUTION

3.1 INSPECTION

Inspect the work, keep records of work performed, and ensure that gages, targets, ranges, and other markers are in place and usable for the intended purpose. Furnish, at the request of the Contracting Officer, boats, boatmen, laborers, and materials necessary for inspecting, supervising, and surveying the work. When required, provide transportation for the Contracting Officer and inspectors between the dredging plant and adjacent points on shore.

3.2 CONDUCT OF DREDGING WORK

3.2.1 Order of Work

The Contracting Officer will direct the Contractor on the order of work. The Government reserves the right to change the order of work at any time.

3.2.2 Interference with Navigation

Minimize interference with the use of channels and passages. The Contracting Officer will direct the shifting or moving of dredges or the interruption of dredging operations to accommodate the movement of vessels and floating equipment, if necessary.

3.2.3 Lights

Each night, between sunset and sunrise and during periods of restricted visibility, provide lights for floating plants, pipelines, ranges, and markers. Also, provide lights for buoys that could endanger or obstruct navigation. When night work is in progress, maintain lights from sunset to sunrise for the observation of dredging operations. Lighting shall conform to United States Coast Guard requirements for visibility and color.

3.2.4 Ranges, Gages, and Lines

Furnish, set, and maintain ranges, buoys, and markers needed to define the work and to facilitate inspection. Establish and maintain gages in locations observable from each part of the work so that the depth may be determined. Suspend dredging when the gages or ranges cannot be seen or followed.

3.2.5 Plant

Maintain the plant, scows, coamings, barges, pipelines, and associated equipment to meet the requirements of the work. Promptly repair leaks or breaks along pipelines. Remove dredged material disposed in the river due to leaks and breaks.

3.2.6 Disposal of Excavated Material

Provide for safe transportation and disposal of dredged materials to the upland disposal site. Transportation shall include measures to prevent loss of material during movement. Contractor is responsible to follow all haul restrictions and requirements imposed by the permits. The deposit of dredged materials in unauthorized places is forbidden.

3.2.7 Communication Cable in Berth

The Contractor shall cut, remove, and dispose of the existing abandoned cable in the berth. The Contractor will coordinate with Frontier.to remove cable from upland manhole. Frontier will disconnect cable and contractor will pull cable into berth. Other end of cable will be cut as shown on the drawings.

3.2.8 Salvaged Material

Anchors, chains, firearms, ordnance, and other articles of value, which are brought to the surface during dredging operations, shall remain or become the property of the Government.

3.2.9 Safety of Structures

The prosecution of work shall ensure the stability of reveted slopes, piers, bulkheads, and other structures lying on or adjacent to the site of the work, insofar as structures may be jeopardized by dredging operations. Repair damage resulting from dredging operations, insofar as such damage may be caused by variation in locations or depth of dredging, or both, from that indicated or permitted under the contract.

3.2.10 Plant Storage

When not in use, plant equipment shall be stored at an approved location.

3.2.11 Plant Removal

Upon completion of the work, promptly remove plant, including ranges, buoys, piles, and other markers or obstructions.

3.3 MEASUREMENT

3.3.1 Method of Measurement

Payment will be by lump sum for material removed to limits indicated.

3.3.2 Periodic Estimates

Periodic estimates of work completed will be based on the result of soundings taken during the progress of the work. Deductions will be made for dredging and disposal not in accordance with the Contract Documents.

3.4 FINAL EXAMINATION AND ACCEPTANCE

Contractor shall promptly remove all equipment from the site upon final disposal of the dredge material.

When areas are found to be in a satisfactory condition, the work therein will be accepted as complete.

-- End of Section --

SECTION 35 59 13.16

MARINE FENDERS

PART 1 GENERAL

1.1 REFERENCES

The publications listed below form a part of this specification to the extent referenced. The publications are referred to within the text by the basic designation only.

AMERICAN WELDING SOCIETY (AWS)

AWS D1.1/D1.1M	(2020) Structural Welding Code - Steel

ASTM INTERNATIONAL (ASTM)

ASTM A123/A123M	(2017) Standard Specification for Zinc (Hot-Dip Galvanized) Coatings on Iron and Steel Products
ASTM A153/A153M	(2016a) Standard Specification for Zinc Coating (Hot-Dip) on Iron and Steel Hardware
ASTM A193/A193M	(2020) Standard Specification for Alloy-Steel and Stainless Steel Bolting Materials for High-Temperature Service and Other Special Purpose Applications
ASTM A36/A36M	(2019) Standard Specification for Carbon Structural Steel
ASTM A413/A413M	(2012) Standard Specification for Carbon Steel Chain
ASTM A563	(2015) Standard Specification for Carbon and Alloy Steel Nuts
ASTM B695	(2004; R 2016) Standard Specification for Coatings of Zinc Mechanically Deposited on Iron and Steel
ASTM F436	(2011) Hardened Steel Washers

U.S. GENERAL SERVICES ADMINISTRATION (GSA)

FS RR-C-271	(Rev G) Chains and Attachments, Carbon And Alloy Steel

1.2 SYSTEM DESCRIPTION

1.2.1 Extruded Fenders

Extruded fenders are elements typically manufactured in a long length by an extrusion process. After manufacture, the elements are cut to length. These fender elements are typically used as fenders for small craft, rub

strips on marine structures,and energy absorbing elements at the wale. Examples of extruded fender shapes are 'Side Mounted Hollow Bore', 'Cylindrical', 'D', 'Square', 'W' and 'Wing'.

1.2.2 Foam-Filled Fenders

Foam-Filled fenders are fenders typically manufactured by wrapping closed cell foam with a nylon reinforcement embedded in a polyurethane coating. The fenders typically used for fendering have an internal chain, though fenders having an external chain/tire netting have also been used. The fenders are typically used for berthing of medium to large vessels; vessels with considerable hull curvature; and at berths that support various ship types and sizes. The fenders can be used as stand-alone fenders, fendering between ships, or between a ship and a berthing structure.

1.3 SUBMITTALS

Government approval is required for submittals with a "G" designation; submittals not having a "G" designation are for Contractor Quality Control approval. Submit the following in accordance with Section 01 33 00 SUBMITTAL PROCEDURES:

SD-02 Shop Drawings

Foam Filled Fender; G

Include layout with fender, connection hardware, and padeyes. Drawing shall show sizes and quantities for each location.

SD-03 Product Data

Galvanized Steel Hardware; G

Include Manufacturer's product data for all fender hardware, including bolts, anchor bolts, inserts, nuts, washers, chains, turnbuckles, dimensions, material specifications, working loads and ultimate loads, as applicable. For anchor bolts and inserts, include methods and materials for installation.

Restraint Chains; G

FOAM FILLED FENDERS

Resilient, foam filled marine fenders

Include dimensions, material specifications, and method of manufacture.

Test data for fender repair materials.

SD-05 Design Data

FOAM FILLED FENDERS

Resilient, foam filled marine fenders.

Submit calculations, including computer analysis and other design data.

SD-06 Test Reports

FOAM FILLED FENDERS

Fender compression test; G

Fender cyclic-compression test; G

Fender sustained-load test; G

Fender pull-through test; G

Skin thickness core test; G

Foam Core Density Test; G

SD-07 Certificates

Galvanized Steel Hardware; G

Submit certificates of compliance certifying that materials meet the requirements specified herein. In addition, when the coating is shop applied, submit certificates of conformance or compliance certifying that surface preparation, coverage, and thickness meet the requirements specified.

SD-08 Manufacturer's Instructions

Installation Instructions; G

Provide installation instructions for each fender type.

SD-10 Operation and Maintenance Data

Fender Manual; G

Provide fender manual for each fender type.

1.4 DELIVERY, HANDLING AND STORAGE

Fenders shall be undamaged when delivered and shall be handled and stored so as to prevent damage, such as bending or abrading end fittings, cutting of rubber, or damage to coating of hardware. Protect fenders from exposure to damaging liquids, oils, greases and extended exposure to sunlight.

1.4.1 Rejection

Fenders that are delivered to the site in a damaged condition or that are not in conformance with this specification are subject to rejection. Any rejected materials shall be replaced with suitable materials, at no additional cost to the Government.

1.4.2 Fender Marking

Unless otherwise specified, all fenders shall be identified in readable characters at least 1 in high, either directly or on corrosion- and sunlight resistant permanently attached tags. The markings shall include

the following:

a. full or abbreviated manufacturer name,

b. fender size model or part number designation,

c. fender serial number,

d. ASTM designation (including type, grade and class) or ISO number and year, as applicable,

e. initial or rated internal pressure (pneumatic and hydro-pneumatic fenders only,

f. rated performance (energy and reaction), and

g. type of reinforcement layer (pneumatic and hydro-pneumatic fenders only,) and

h. other information as the purchase specification or contract requires.

1.4.3 Fender Instructions and Manual

Provide installation instructions and a fender manual describing maintenance requirements for each fender type.

1.4.4 Handling Coated Material

Store, handle and place coated material in a manner that will minimize damage to the coating and will not reduce its effective protective value. Repair damaged surfaces as directed and per the Manufacturer's recommendations. Handle coated work which is flexible in a manner that will prevent flexing sufficient to crack coating, especially when temperature is below 40 degrees F. Do not place coated surfaces on strips or skids until coating has hardened thoroughly. Wide fabric slings used for lifting, and strips, slings, blocks, skids, cradles, and other supports shall provide ample bearing areas. In transporting, fasten and protect coated materials in a manner that will prevent movement and preclude chafing and rubbing, and when unloading, do not dump or drop. Place coated material in position carefully on suitably prepared beds and with a minimum of handling.

1.5 QUALITY ASSURANCE

1.5.1 Elastomer Skin

The elastomer skin of the fender shall be free from cracks, burrs, warpage, checks, chipped or blistered surfaces, and shall have a smooth surface.

1.5.2 Foam Core

The foam core shall be homogeneous and of one piece fabricated construction and shall not be in chip or granular form. The foam core shall not contain scraps, strips, or sheets of foam either rolled or stuffed into the required shape unless pieces are bonded together in layers of uniform patterns to form a homogeneous, one piece core. Homogeneous foam rings of adequate thickness to insure performance of the fender are acceptable provided the Contractor can show a minimum 5-year

performance of similar fenders.

1.5.3 Steel Fabrication

The steel used in fabrication shall be free from kinks, sharp bends, and other conditions which would be detrimental to the finished product. Manufacturing processes shall not reduce the strength of the steel to a value less than intended by the design. Manufacturing processes shall be done neatly and accurately. Make bends by controlled means to insure uniformity of size and shape.

1.5.4 Welding

AWS D1.1/D1.1M. Welds shall be of sufficient size and shape to develop the full strength of the parts connected by the welds. Welds shall transmit stress without permanent deformation or failure when the parts connected by the weld are subjected to proof and service loadings.

1.5.5 Foam-Filled Fenders

A. Elastomer Skin

1. The elastomer skin of the fender shall be free from cracks, burrs, warpage, checks, chipped or blistered surfaces, and shall have a smooth surface.

B. Steel Fabrication

1. The steel used in fabrication shall be free from kinks, sharp bends, and other conditions, which would be detrimental to the finished product. Manufacturing processes shall not reduce the strength of the steel to a value less than intended by the design. Manufacturing processes shall be done neatly and accurately. Make bends by controlled means to insure uniformity of size and shape.

C. Foam Core

1. The foam core shall be homogeneous and of one piece fabricated construction and shall not be in chip or granular form. The foam core construction shall utilize only a heat-laminated process, and yield a single solid foam core. The foam core shall not contain scraps, strips, or sheets of foam either rolled or stuffed into the required shape unless pieces are bonded together in layers of uniform patterns to form a homogeneous, one piece core. Homogeneous foam rings of adequate thickness to insure performance of the fender is acceptable provided the Contractor could show a minimum 5-year performance of similar fenders.

Tests shall be carried out on every batch of foam delivered, and shall be in accordance to ASTM D 3575 or comparable ISO methods.

All foam used shall be traceable to the manufacturer of the foam, by means of production data and lot number, or other positive means. Production/Quality Control records of the fender manufacturer shall record this information for each fender manufactured. The fender manufacturer's records must be able to trace all foam used in each fender back to the manufacturer of the foam, and identify the date the foam was manufactured and tested.

The manufacturer of the foam shall provide certified test reports for each lot of foam delivered, and the fender manufacturer must maintain these records for a period of 10 years. The fender manufacturer shall provide proof that the sufficient quantity of foam was purchased to complete this contract. The fender manufacturer shall retain samples from each lot of foam used in the fenders. The samples shall be subject to re-tests at the request of the purchaser of the fenders.

D. Welding

1. AWS D1.1. Welds shall be of sufficient size and shape to develop the full strength of the parts connected by the welds. Welds shall transmit stress without permanent deformation or failure when the parts connected by the weld are subjected to proof and service loadings.

1.6 FOAM-FILLED FENDERS, PNEUMATIC AND HYDRO-PNEUMATIC FENDERS - WARRANTY

Furnish the manufacturer's warranty. The warranty shall be issued directly to the Government and shall not be limited in dollar value. The warranty period shall be not less than 1 year from the date of Government acceptance of the work.

PART 2 PRODUCTS

2.1 FOAM-FILLED FENDERS

2.1.1 Configuration

Fenders shall have cylindrical mid-bodies with conical or hemispherical shaped ends terminating in an end fitting on the cylinder's centerline at each end. The diameter of the mid-body shall be 96 inches minimum, and the length of the mid-body shall 74 inches minimum. If conical ends are provided, they shall have an angle of 60 to 75 degrees, when measured from the central axis of the fender. The fittings at either end shall be connected through the center of the fender by a chain; shall terminate in a clevis fitting sized for 2.0 inch shackle; and shall swivel to allow the end fitting to rotate freely on the axis of the fender. The length of the fender from eye to eye of the end fittings shall be a minimum 144 inches. Design end fitting as small as possible to transmit the ultimate load of the shackle to the fender. End fitting shall be sized so as not to contact loading surfaces when the fender is compressed to 30 percent of its original diameter (70 percent compression). Each end fittings shall not be a continuous member, however each independent end fitting shall be of sufficient length to span all of 3 ft in the center of the fender. The end fitting shall be permanently affixed to the fender core prior to applying the skin. Fill interior of the fender with energy absorbing closed-cell foam as specified. The use of chipped or particulate foam is not acceptable.

2.1.2 Foam Core

A. The energy absorbing foam core shall be closed-cell cross-linked polyethylene foam. The foam core construction shall utilize only a heat-laminated process, and yield a single solid foam core. Use of chipped or granulated particulate foam or foam widths less than 48 inches is not acceptable. The foam shall have the minimum following properties:

1) Density, ASTM D 1667, 1.8 to 2.5 lbs/ft3
2) Tensile strength, ASTM D 3575 or ASTM D 412, 35 psi minimum
3) Elongation (ultimate), ASTM D 3575 or ASTM D 412, 120 percent minimum
4) Water absorption percent volume after 24 hour exposure, ASTM D 1667, 5.0 percent maximum
5) Continuous service temperature, -65 to +120 degrees F
6) 50 percent compressive set, ASTM D 3575, 22 percent maximum.

There shall be no deviation of the foam core density. If manufacturer requests or submits a deviation from foam core density specified, an ABS inspector shall randomly select 1 fender from each completed lot of 2 fenders minimum, mark the fender with a permanent identification and witness the fender full scale testing at an independent testing laboratory. Project engineering company shall review and verify test report prior to shipment of fenders.

2.1.3 Fender Skin

The outer fender skin shall be minimum 1.25 inch thick and constructed of elastomer as specified. Reinforcing is mandatory. A minimum of ten separate filament-reinforcing wraps shall be applied as specified under Filament Wrap. The filament wraps shall be evenly distributed in the inner 75 percent to 90 percent of the coating thickness. The outer 10 percent to 25 percent of elastomer shall have no filament reinforcing. The elastomer and filaments shall be applied in a continuous manner to assure adhesion between the various layers. The connection of the skin to the end fittings shall be designed and sized to transmit twice the safe tensile capacity of the chain into the fender skin.

2.1.3.1 Elastomer

The elastomer used in the fender skin shall be a non-marking solvent free PTMEG (polytetramethylene ether glycol), tolune diisocyanate and aromatic diamine polyether urethane elastomer, with UV inhibitors and antioxidants and shall have the following unreinforced properties:

1) Shore A. hardness, ASTM D 2240, 75 to 95.
2) Tensile strength, ASTM D 412, 2600-psi minimum.
3) Elongation (ultimate), ASTM D 412, 375 percent minimum.
4) Tear strength, ASTM D 470, 230 Lbs/inch minimum.
5) Flex life (Ross), ASTM D 1052, 243,000 cycles minimum.
6) Abrasion resistance (NBS), ASTM D 1630, 100 minimum.

2.1.3.2 Filament Wrap

Filament reinforcing is required; construct each filament-reinforcing wrap of continuous filaments applied in a helical pattern, at a helix angle of 45 to 60 degrees to the longitudinal axis of the buoy. A wrap shall consist of two such filament helixes of equal but opposing helix angles. The spacing between the filaments in the same helix shall be no more than 3mm, measured in a direction parallel to the longitudinal axis of the fender. Each wrap shall extend along the entire longitudinal axis of the fender and shall also encase the fender end fittings and secure them to the fender body.

2.1.3.3 Filament Reinforcing

Filament reinforcing is required; the reinforcing filaments in the outer

skin shall be nylon tire cord of 2540 denier weight with the following properties:

1) Breaking strength, 53 pounds
2) Elongation (ultimate), ASTM D 412, 16 percent

2.1.3.4 Color

Fender skin color shall be black throughout the entire thickness. Galvanized hardware shall be unpainted.

2.1.3.5 Repairability

The fender casing shall be repairable in the event of tears or punctures in the elastomer skin. The repaired area shall have not less than 90 percent of the properties as specified in paragraph entitled "Elastomer." Required repair materials shall be readily available from the fender manufacturer.

2.1.4 Internal Hardware

The internal chain connecting the two end fittings shall be galvanized in accordance with ASTM A 123 or ASTM A 153/A 153M as appropriate. The internal chain and end clevis fitting shall to transmit the safe working load of 144,000 lbs. The internal chain shall be a minimum of 2.0 inch. Shackles shall be as specified and shall have a minimum working load capacity of as specified. All hardware shall conform to RR-C-271. All chains shall conform to the requirements of ASTM A 413/A 413M.

Shackles shall be inches and shall have a minimum working load limit of:

1) 2.0 inch shackle and shall have a minimum working load limit of 55 ton

2.1.5 Performance Requirements

Each foam-filled fender shall have the following performance characteristics:

SIZE	ENERGY ABSORPTION	REACTION FORCE
	at 60 percent compression	at predicted energy attainment
8' x 12'	319 ft-kips	148 kips

The resilient, foam filled marine fenders shall be designed so that when compressed across its diameter by two parallel flat plates extending the full length and width of the fender, the fender shall absorb 319 ft-kips of energy +15 percent when 60 percent compressed (i.e. to a dimension of 40 percent of its original diameter) with a corresponding load of not more than 148 kips +15 percent. The fender shall also be designed to withstand a sustained reaction force of 88 kips for a duration of not less than 24 hours each occurrence for at least 200 occurrences during its 10-year life.

2.1.6 Source Quality Control

2.1.6.1 Fender Compression Test

Compress fender along its diameter between two parallel flat plate surfaces to a compressed dimension of 40 percent of its original diameter. Record load and the corresponding deflection at one-inch increments and plot as a graph of load versus deflection. The load-deflection curve shall then be integrated to generate an energy-deflection curve for the fender. The fender shall meet the energy and force performance requirements of the paragraph entitled "Performance Requirements." After compression of the fender to 40 percent of its original diameter (60 percent compression) the fender shall rebound to 90 percent of its original diameter within two minutes after the load is removed, and to 95 percent of its original diameter within 30 minutes after the load is removed.

2.1.6.2 Fender Cyclic-Compression Test

Compress the fender along its diameter between two parallel flat plate surfaces to a compressed dimension of 40 percent of its original diameter. Repeat the compression and release cyclic loadings for a minimum of 10 full cycles of compression. Permanent deformation, cracking, or tearing of the fender skin, fender core, or end fittings shall constitute failure of this test.

2.1.6.3 Fender Sustained-Load Test

Apply a 88,000 pound compressive load and hold this load for 24 hours. Record load and deflection each hour. Immediately after release of the load, measure rebound of the fender. Continue to record fender rebound for 24 hours. Failure of the fender or foam core to rebound to 90 percent of its original diameter after 24 hours shall constitute failure of this test. If the foam core is not bonded to the skin of the fender, devise and execute a means for measuring rebound of the foam core and for measuring the void between the foam core and the skin. The maximum rate of compression per minute shall be 20 percent of the total reaction force at 60 percent compression. The full compression cycle, not including rebound, shall take a minimum of 5 minutes.

2.1.6.4 Fender Pull-Through Test

Devise and perform a test which will measure the resistance of the end fittings and internal chain to pull through the longitudinal axis of the fender. Failure of the chain, end fittings, or skin to resist at least 70,000 pounds of pull-through tension shall constitute failure of this test. After loading, evidence of permanent deformation, cracking, or tearing of the fender or end fittings shall also constitute failure of this test.

2.1.6.5 Skin Thickness Core Test

A. After delivery of all of the fenders to the construction site and before fender installation,perform a minimum of 3 skin thickness tests per fender for each of 4 fenders to be selected at random by the Construction Manager. The Construction Manager will select test locations on the fenders. Each test shall consist of taking a 0.5 inch diameter (minimum) to 2.0 inch diameter (maximum) core from the fender skin, which can be removed from the skin and examined for thickness of elastomer and placement of reinforcing (when reinforcing is required).

Take skin thickness measurements from the core sample and record measurements noting placement of reinforcing. Where the skin thickness measurement is less than the specified minimum, or the minimum required by the Contractor's design (whichever is greater) by more than 10 percent, reject the fender. In addition, if the average of skin thickness tests for one fender is not equal to or greater than the specified minimum, or the minimum required by the Contractor's design (whichever is greater), reject the fender. If tested fender is rejected, at the option of the Construction Manager, the Contractor shall then conduct thickness tests for additional fenders. Replace rejected fenders with fenders meeting the provisions of this specification. Test replacement fenders for skin thickness as specified herein. The Construction Manager will witness skin thickness tests. The Contractor shall notify the Construction Manager 10 working days prior to conducting skin thickness tests. After skin thickness and foam core testing, patch core holes with elastomer of the same composition and thickness as the specified elastomer skin. Nylon reinforcing is not required in core hole patches.

2.1.7 Connecting Hardware

The connecting chain, swivel and shackles shall be galvanized in accordance with ASTM A123/A123M or ASTM A153/A153M, as appropriate. The hardware shall be as follows:

Item	Type
Chain	ASTM A413/A413M, Stud Link or Open Link
Shackle	FS RR-C-271, Type IVA, Class 3, Grade A
Swivel	FS RR-C-271, Type VII, Class 2

All connecting bolts and pins shall be of mild steel, matching the properties of the shackle bow. For Class 3 shackles, the bolt or pins shall be secured in place with stainless steel (Type 316) cotter pins or locking pins.

2.1.8 Galvanized Steel Hardware

All hardware shall be hot-dip galvanized in accordance with ASTM A123/A123M, ASTM A153/A153M or ASTM B695, as applicable.

2.1.8.1 Plates (Padeye)

ASTM A36/A36M

2.1.8.2 Threaded Rod, Nuts and Washers for Padeye

Threaded rods shall be ASTM A193/A193M, Grade B7. Nuts shall be ASTM A563, Grade A heavy hex. Washers shall be ASTM F436 of carbon steel.

PART 3 EXECUTION

3.1 FOAM-FILLED FENDERS

Install fenders as indicated on the drawings and in accordance with the manufacturer's specifications and shop drawings. Bolts shall be tightened

an additional 1/3 turn of the nut, from the snug tight condition, and secured with cotter pins.

3.2 WELDING

Welding shall be performed in accordance with AWS D1.1/D1.1M.

3.3 CONNECTIONS

3.3.1 Antiseize Compound

Coat threads of bolts prior to applying washers and nuts. Recoat bolt thread projection beyond nut after tightening.

-- End of Section --

APPENDIX A
Amtrak Specifications

EP 3005- PIPELINE OCCUPANCY- SPECIFICATION 02081A

TABLE OF CONTENTS

PART 1 – GENERAL

1.1 SCOPE AND NATURE

These specifications apply to the design, construction and maintenance of pipelines and casings carrying flammable and non-flammable substances, or containing wires and cables, under, over, across and longitudinally along Amtrak property, right-of-way and facilities.

It is to be clearly understood that Amtrak owns its right-of-way for the primary purpose of operating a railroad. All occupancies shall therefore be designed and constructed so that operations and facilities are not interfered with, interrupted or endangered. In addition, the proposed facility shall be located to minimize encumbrance to the right-of-way so that the railroad will have unrestricted use of its property for current and future operations.

1.2 APPLICATION FOR OCCUPANCY

Individuals, Owners, Corporations and Municipalities (hereinafter known as the Applicant) desiring pipeline occupancy on Amtrak property must agree, upon approval of the construction plans by Amtrak, to execute an appropriate License Agreement and pay any required fees and/or rentals outlined therein.

Application for a License Agreement shall be made by letter addressed to Real Estate Department – National Railroad Passenger Corporation, 30th Street Station, Box 25, Philadelphia, PA 19104. The application must provide the following information:

1. Name of Applicant desiring the occupancy.
2. Complete mailing address of Applicant.
3. Name and title of person who will sign the License Agreement.
4. The State in which the Applicant is incorporated.
5. Complete description of the project, including installation, location and specific details of the occupancy.

No entry upon Amtrak property for the purpose of conducting surveys, field inspections, obtaining soil information, or for any other purpose required for the design and engineering of the proposed occupancy, will be allowed without a Right of Entry Permit executed by Amtrak. The Applicant must apply for the Right-of-Entry Permit and pay any associated fees.

It is to be clearly understood that the issuance of a Right of Entry Permit does not constitute authority to proceed with the actual construction. Actual construction cannot begin until a formal License Agreement has been fully executed by Amtrak and authorization to proceed has been granted.

All persons entering Amtrak property must first attend Railroad's Contractor Orientation Computer Based Training Class. The Contractor Orientation Class will be provided electronically at www.amtrakcontractor.com. Upon successful completion of the course andtest, the individual taking the course will receive a temporary certificate without a photo that isvalid for three weeks. The individual must upload a photo of himself/herself that will be embedded in the permanent ID card. The photo ID will be mailed to the individual's home address and must be worn or displayed while on Railroad property. Training is valid for one calendar year. All costs of complying with Railroad's safety training shall be at the sole expense of Permittee and/or Contractor. The Permittee and/or Contractor shall appoint a qualified person as its Safety Representative. The Safety Representative shall continuously ensure that all individuals comply with Railroad's safety requirements. All safety training records must be maintained with the Permittee's and/or Contractor's site specific work plan.

1.3 SUBMISSION OF PLANS AND DOCUMENTATION

All License Agreement applications shall be accompanied by ten complete sets of all project construction plans, specifications and computations covering the proposed occupancy. The construction plans, specifications and computations shall be signed and sealed by a Registered Professional Engineer licensed in the state in which the work is to be performed. If the plans, specifications and computations (including those submitted by contractors or suppliers) are not signed and sealed, they will be given no further consideration.

All proposed pipeline occupancy submissions to Amtrak shall be accompanied by two full size sets and eight half size sets (11" x 17") of plans. The half size plans are to be folded to an 8½" x 11" size, with a 1½"

margin on the left hand side and a 1" margin on the top, so that they can be secured at the upper left hand corner and still be unfolded to full size without being removed from the file. After folding, the title block or any other identification of the plans shall be visible at the lower right hand corner without the necessity of unfolding. Each plan shall bear an individual identifying number and an original issue date, together with subsequent revision dates. Revisions shall be clearly identified on the plans so that it is readily apparent as to what revisions were made and when. All plan sheets are to be folded individually and, where more than one plan is involved, the plan sheets shall be assembled into complete sets before submission to Amtrak. Upon completion of the project, as-built plans shall also be provided in an Adobe Acrobat CD ROM format.

Failure of the Applicant to comply with these requirements may be sufficient cause for rejection of the application.

Plans shall be drawn to scale, and a bar scale shall be provided. As a minimum, the following information shall be included:

1. Plan view of proposed pipeline in relation to all Amtrak facilities and facilities immediately adjacent to Amtrak, including, but not limited to, tracks, buildings, signals, pole lines, catenary pole foundations and guy anchors, other utilities and all other facilities that may affect or influence the pipeline design and construction. The right-of-way property line shall be clearly delineated (see Sketch 1).
2. Location of centerline of pipe (in feet) from the nearest railroad milepost or centerline of a railroad bridge (giving bridge milepost number). In all cases, the names of the municipality and the county in which the proposed facilities are located must be shown.
3. Profile of ground at centerline of pipe (from field survey) showing the relationship of the pipe and casing to ground level, tracks and other facilities (see Sketch 2). For longitudinal occupations, the profile of adjacent track or tracks must be shown (see Sketch 3). The location and description of benchmarks used in the field survey shall be given.
4. If the pipeline is in a public highway, the limits of the right-of-way for the highway shall be clearly indicated with dimensions from the centerline of the highway (see Sketches 1 & 4).
5. The angle of crossings in relation to the centerline of tracks.
6. Location and description of valves or control stations of the pipeline, or junction boxes and splice points for cable conduits, shall be clearly shown on the plans.
7. The Pipeline Crossing Data Sheet must be completed and shown on the plans submitted for approval (see Sketch 6).
8. Location and description of all appurtenances, manholes and other accesses shall be shown on the plans.

The plans must be specific as to:

1. Method of construction and installation.
2. Size and material of casing pipe, including any insulation or coatings proposed.
3. Size and material of carrier pipe, including any insulation or coatings proposed.

Location and dimensions of jacking, boring, or tunneling pits and of longitudinal pipeline trenches shall be shown, along with details of their sheeting and shoring. For usual soil conditions, if the bottom of the excavated pit nearest the adjacent track intersects a line drawn on a slope of 1½ horizontal to 1 vertical from a the bottom corner of a tie on the adjacent track, a temporary support of excavation system designed by a Registered Professional Engineer licensed in the State in which the work is to be performed shall be submitted for approval. For special soil conditions, a temporary support of excavation may be required for distances further from centerline of adjacent track. All temporary sheeting and shoring must comply with Amtrak Engineering Practice EP3014, Section 02261A, Requirements for Temporary Sheeting and Shoring to Support Amtrak Tracks. In any event, the face of the pit shall be no less than 25' from adjacent track, unless otherwise approved by Amtrak. During construction, jacking, boring or tunneling, pits shall be fenced, lighted, and otherwise protected as directed by Amtrak designated field representative.

If required, a dewatering plan shall be included in the submission. The dewatering plan shall include the location and dimensions of system components, structural capacity of pits, etc., and all pertinent collection and discharge data.

When computer calculations are included with design calculations, the following minimum documentation shall be furnished:

1. A synopsis of the computer program(s), stating briefly: required input, method of solution, approximations used, specifications or codes used, cases considered, output generated, extent of previous usage or certification of program(s) and the name of the author of the program(s).

2. Identification by number, indexing and cross referencing of all calculation sheets, including supplemental "long-hand" calculations sheets.

3. Fully identified, dimensioned and annotated diagram of each member of the structure being considered.

4. Clear identification and printing of all input and output values, including intermediate values, if such values are necessary for orderly review.

5. Identification of the processing unit, input/output devices, storage requirements, etc., if such supplemental information is significant and necessary for evaluation of the submittal.

Once Amtrak approves an application and the License Agreement issued, no variance from the plans, specifications, methods of construction, etc. will be considered or permitted without resubmission of plans to and receipt of approval from Amtrak.

1.4 PERMIT APPROVAL – NOTIFICATION TO PROCEED

Notification to Proceed with Construction: After approval of the engineering plans, computations and specifications, and the execution of the License Agreement, the Applicant's project can be undertaken. The Applicant will notify Amtrak a minimum of 21 working days prior to the desired start of construction (see Amtrak Engineering Practice EP3014, Section 01141A, Safety and Protection of Railroad Traffic and Property). The Applicant is responsible for notifying and coordinating the work with all utility owners.

1.5 MODIFICATION OF EXISTING FACILITIES

Any replacement or modification of an existing carrier pipe and/or casing shall be considered a new installation subject to the requirements of these specifications. The owner of all pipelines and other occupancies shall notify in writing, Amtrak of any intention to replace or modify existing facilities.

1.6 ABANDONED PIPELINES AND/OR FACILITIES

The owner of all pipelines and other occupancies shall notify in writing, Amtrak of the intention to abandon. The owner will be continually billed for the occupancy until such written notice is received.

Upon abandonment, the carrier pipe shall be removed and the casing shall be completely filled with cement grout, compacted sand or other materials approved by Amtrak, using methods approved by Amtrak. If it is impracticable to remove the carrier pipe, then the carrier must be filled along with the annular space between the casing and the carrier.

Facilities other than pipelines will be removed or altered at abandonment to the satisfaction of Amtrak.

1.7 CONFLICT OF SPECIFICATIONS

Where laws or orders of public authority prescribe a higher degree of protection than specified herein, then the higher degree so prescribed shall be deemed a part of these specifications. Any such requirements shall be clearly referenced in the application.

1.8 DEFINITIONS

AASHTO – American Association of State Highway and Transportation Officials

Amtrak – National Railroad Passenger Corporation, and/or the duly authorized representative.

ANSI – American National Standards Institute

API – American Petroleum Institute

Applicant – Individuals, Owners, Corporations, and Municipalities desiring occupancy of Amtrak property by a pipeline.

AREMA – American Railway Engineering and Maintenance-of-Way Association

ASTM – American Society for Testing and Materials

Boring – Pushing a pipe though fill material, with a boring auger rotating within the pipe to remove the soil.

Carrier Pipe – Pipe containing primary fluid or cable through occupancy area.

Casing Pipe – Protective encasement for a carrier pipe whose function is both structural and for containment of carrier fluids within the occupancy area, and/or dispersion of carrier fluids beyond the occupancy area.

Cooper E-80 – Live load for each track based on four 80 kips axle load with 5' axle spacing.

Horizontal Directional Drilling (Directional Boring) – method of controlled drilling beneath existing facilities using a pilot hole bore.

Jack Boring – method of jacking a pilot rod beneath existing facilities between a launching pit and a receiving pit.

Longitudinal Occupancy – The installation and maintenance of pipelines that do not cross tracks, along and adjacent to tracks and within Amtrak property, right-of-way and facilities.

CLSM – Controlled Low Strength Material

MSDS – Material Safety Data Sheet

NEC – National Electric Code

NESC – National Electric and Safety Code

License Agreement – Agreement between Amtrak and applicant to allow applicant to construct and maintain pipelines under, over, across or longitudinally along Amtrak property, right-of-way and facilities.

Open-Cut Trenching – Surface excavation methods to allow the installation of pipelines.

OSHA – Occupational Safety and Health Administration.

Pits (Launch/Receiving) – Excavations at each end of a work area to allow jacking, boring or tunneling operations beneath existing site conditions.

Right of Entry Permit – Permit allowing applicant to enter Amtrak property solely for the purpose of obtaining information required for the design and engineering of a proposed License Agreement.

Transverse Occupancy – The installation and maintenance of pipelines on Amtrak property, right-of-way and facilities, where such pipelines cross tracks.

Tremie Grouting – A method in which concrete placed underwater through a pipeline (tremie pipe) to form a seal between the subsurface and water levels.

Tunneling – Method of boring with or without the use of placing liner plates behind a tunneling shield of tunneling machine, thus forming a casing for the installation of a carrier pipe under existing conditions

1.9 PUBLICATION STANDARDS

AWS – American Welding Society, Inc., 550 NW 42nd Avenue, Miami, FL 33126-0567

ANSI – American National Standards Institute, Inc., 11 West 42nd Street, New York, NY 10036

ASTM – American Society for Testing and Material, 100 Bar Harbor Drive, West Conshohocken, PA 19428-2959

AREMA – American Railway Engineering and Maintenance-of-Way Association, 8201 Corporate Drive, Suite 1125, Landover, MD 20785

AWWA – American Water Works Association, Inc., 1401 New York Avenue N.W., Suite 640, Washington, DC 20005

OSHA – Occupational, Safety and Health Administration, Superintendent of Documents, U.S. Printing Office, Washington, DC 20402

NACE – National Association of Corrosion Engineers, P.O. Box 201009, Houston, TX 77216-1009

If other than American Railway Engineering and Maintenance-of-Way Association (AREMA), American Society for Testing and Materials (ASTM), and American National Standards (ANSI)

specifications are referred to for design, materials or workmanship on the plans and specifications for the work, then copies of the applicable sections of such other specifications shall accompany the plans and specifications for the work.

PART 2 – TECHNICAL REQUIREMENTS

2.1 LOCATION OF PIPELINE ON THE RIGHT-OF-WAY

Pipelines laid longitudinally on Amtrak Right-of-Way shall be located as far as practicable from any tracks or other important structures and as close to the Amtrak property line as possible. Longitudinal pipelines must not be located within drainage ditches located on the right-of-way.

Pipelines shall be located, where practicable, to cross tracks at approximate right angles thereto, but generally no less than 45°.

Pipelines shall not be located within the limits of a turnout (switch) when crossing the track. The limits of the turnout extend from the second tie before the point of the switch to the first tie beyond the last long timber.

Pipelines shall not be located within the limits of a highway crossing at grade. If it is shown that no other location is possible, the Applicant will be responsible for reimbursing Amtrak for all costs associated with the removal and reconstruction of the grade crossing.

Pipelines and casings shall be suitably insulated from underground conduits or direct burial cables carrying electric wires on Amtrak property, in accordance with ANSI and NESC standards.

Pipelines shall not be placed within a culvert, under railroad bridges, nor closer than 45' to any portion of any railroad bridge, building or other important structure, except in special cases, and then by special design, as approved by Amtrak.

2.2 CARRIER PIPE

All proposed pipes, ditches and other structures carrying surface drainage on Amtrak property and/or crossing under Amtrak tracks shall be designed to carry the run-off from a 100 year storm. Computations indicating this design and suitable topographic plans, prepared by a Registered Professional Engineer licensed in the State in which the work is being performed shall be submitted to Amtrak for approval. If the drainage is to discharge into an existing drainage channel on Amtrak Right-of-Way and/or under Amtrak tracks, the computations should include the hydraulic analysis of any existing structures. Submitted with the computations should be formal approval of the proposed design by the appropriate governmental agency.

Carrier pipes within a casing shall be designed as if they are not encased.

All pipes shall be designed for the external and internal loads to which they will be subjected. The dead load of earth shall be considered 120 pounds per cubic foot. Railroad live loading shall be Cooper's E-80 with 50% added for impact. The following shall be the minimum requirements for carrier pipes:

1. Reinforced concrete pipe – ASTM C76, Class V. Wall C
2. Ductile Iron Pipe – ANSI A21.51, Class 56
3. Corrugated Metal Pipe – AREMA Manual, Chapter 1, Part 4.
4. Cast Iron Pipe – for culverts and gravity sewers – ASTM A-716 Extra Heavy.
5. Steel Pipe – ASTM A53, Type E or S, Grade A or B
6. Polyethylene – for cable, wire or fiber optic lines – Special approval required for pipe in excess of 6" OD. ASTM D 3350 – Standard Specification for Polyethylene Plastic Pipe and Fittings Materials, and ASTM D2513 – Standard Specification for Thermoplastic Gas Pressure Pipe, Tube and Fittings or AWWA C 901/C 906 – Standards for Polyethylene (PE) Pressure Pipe and Tubing for Water Service.
7. Others – as approved by Amtrak.

Pipelines carrying oil, liquefied petroleum gas, natural or manufactured gas and other flammable products shall conform to the requirements of the current ANSI B 31.4 with Addenda "*Liquid Transportation Systems for Hydrocarbons, Liquid Petroleum Gas, Anhydrous Ammonia, and Alcohol's*"; ANSI B 31.8 "*Gas Transmission and Distribution Piping Systems*"; and other applicable ANSI Codes except that the maximum allowable stresses for design of steel pipe shall not exceed the following percentages of the specified minimum yield strength (multiplied by the longitudinal joint factor) of the pipe as defined in the ANSI Codes:

8. Steel pipe within a casing under Amtrak tracks, across Amtrak right-of-way, and longitudinally on Amtrak right-of-way (the following percentages apply to hoop stress):

- **a.** Seventy-two percent for installation of oil pipelines.
- **b.** Fifty percent for pipelines carrying liquefied petroleum gas and other flammable liquids with low flash point.
- **c.** Sixty percent for installation of gas pipelines.

2.3 CASING PIPE

Pipelines under or along Amtrak tracks and across Amtrak right-of-way shall be encased in a larger pipe or conduit called the casing pipe.

Casing pipe will be required for all pipelines carrying oil, gas, petroleum products, or other flammable or highly volatile substances under pressure, and all non-flammable substances which, from their nature or pressure, as determined by Amtrak, might cause damage if escaping on, under, over, or near Amtrak property.

For non-pressure sewer or drainage crossings, where the installation is approved by Amtrak, the casing pipe may be omitted when the carrier pipe strength is capable of withstanding railroad loading hereinafter specified.

The casing pipe shall be designed in accordance with criteria on Section 2.4. Casing pipe shall be installed so as to provide an even bearing pressure throughout its length. Casing pipe laid transverse to the railroad shall slope to one end.

Protection at ends of casings:

1. Casings for carriers of flammable substances shall be suitably sealed to the outside of the carrier pipe. Details of seals shall be shown on the plans.
2. Casings for carriers of non-flammable substances shall have both ends of the casing blocked up in such a way as to prevent the entrance of foreign material, but allowing leakage to be safely detected in the event of a carrier break.
3. Where ends of casings are at or above ground surface and above high water level, they may be left open, provided drainage is afforded in such a manner that leakage will be conducted away from railroad tracks and structures.

Vents:

1. All sealed casings shall be adequately vented. Special attention shall be given to sealed casings for flammable substances in accordance with ANSI Standards. Vent pipes shall be of sufficient diameter, but in no case less than 2" in diameter, and shall be attached near each end of the casing and project through the ground surface at right-of-way lines or not less than 45' (measured at right angles) from centerline of nearest track.
2. Vent pipes shall extend not less than 4' above the ground surface. Top of vent pipe shall have a down-turned elbow, properly screened, or a relief valve. Vents in locations subject to high water shall be extended above the maximum elevation of high water and shall be supported and protected in a manner approved by Amtrak.
3. Vent pipes shall be at least 4' vertically from aerial electric wires or greater if required by NESC and ANSI Standards.
4. When the pipeline is in a public highway, street-type vents shall be installed.

If additional tracks are constructed in the future, the casing shall be extended correspondingly at the expense of the Applicant.

2.4 DESIGN CRITERIA

Pipes may be rigid or flexible, as permitted by their specific use. The design criteria follows, and shall be in accordance with the current AREMA Manual for Railway Engineering.

The inside diameter of the casing pipe shall be such as to allow the carrier pipe to be subsequently removed without disturbing the casing or the roadbed. For carrier pipe less than 6" in diameter, the inside diameter of a steel casing pipe shall be at least 2" greater than the largest outside diameter of the carrier pipe, joints, or couplings; for carrier pipe 6" and over in diameter, the inside diameter of a steel casing pipe shall be at least 4" greater than the largest outside diameter of the carrier pipe, joints, or couplings.

Casing pipe under Amtrak tracks and across Amtrak Right-of-Way shall extend the greater of the following distances measured at right angles to centerline of tracks:

1. Across the entire width of Amtrak Right-of-Way.
2. 3' beyond ditch line.
3. 2' beyond toe of slope.
4. A minimum distance of 25' each side from centerline of outside track when casing is sealed at both ends.
5. A minimum distance of 45' from centerline of outside track when casing is open at both ends.

Where installation of the casing pipe is proposed by means of open cut, the designer should determine the effects upon the casing due to change in weight of the new compacted fills and potential for lateral spreading of the embankment and account for these effects in the design. Where segmental casing pipe segments are used, temporary or permanent tension rods may be required by the Engineer.

The values shown in Table 1 shall be used for the live load vertical pressure on a buried structure for the various heights of cover.

TABLE 1 (MODIFIED)

(AREMA, CHAPTER 1, PART 4, TABLE 4-39)

PRESSURE FROM COOPER E-80 LIVE LOAD, INCLUDING IMPACT, FOR VARIOUS HEIGHTS OF COVER

Height of Cover (feet)	Live Load Pressure (lb/sq.ft.)
5.5	2400
8	1600
10	1100
12	800
15	600
20	300
30	100

Note: If height of cover, from bottom of cross tie to top of structure, is over 30', use dead load pressure only.

Steel casing pipe shall have a minimum wall thickness as shown in Table 2 (next page), unless computations indicate that a thicker wall is required. Computations showing the adequacy of casing pipe wall thickness shall be furnished as part of the submittal.

TABLE 2

(AREMA, CHAPTER 1, PART 5, TABLE 5-1)

Pipe Diameter	Coated or Cathodically Protected	Uncoated and Unprotected
Nominal Pipe Size (inches)	**Nominal Wall Thickness (inches)**	**Nominal Wall Thickness (inches)**
12¾ and under	0.188	0.188
14	0.188	0.250
16	0.219	0.281
18	0.250	0.312
20 and 22	0.281	0.344
24	0.312	0.375
26	0.344	0.406
28	0.375	0.438
30	0.406	0.469
32	0.438	0.500
34 and 36	0.469	0.531
38	0.500	0.562
40	0.531	0.594
42	0.562	0.625
44 and 46	0.594	0.656
48	0.625	0.688
50	0.656	0.719
52	0.688	0.750
54	0.719	0.781
56 and 58	0.750	0.812
60	0.781	0.844
62	0.812	0.875
64	0.844	0.906
66 and 68	0.875	0.938
70	0.906	0.969
72	0.938	1.000

Steel pipe shall have minimum yield strength of 35,000 psi. The ASTM or API specification and grade for the pipe are to be shown on the Pipe Data Sheet.

Corrugated metal pipe or corrugated structural plate pipe may be used for casing, provided the pressure in the carrier pipe is less than 100 psi, and only when placed by the open cut method. Jacking or boring through railroad embankment for corrugated pipe is not permitted. Pipe shall be bituminous coated and shall conform to the current AREMA Manual for Railway Engineering, Chapter 1, Part 4.

Tunnel liner plates shall be galvanized and bituminous coated and shall conform to the current, at time Application is made, AREMA Manual for Railway Engineering, Chapter 1, Part 4. In no event shall the liner plate thickness by less than 0.105".

If the tunnel liner plates are used only to maintain a tunneled opening until the carrier pipe is installed, and the annular space between the carrier pipe and the tunnel liner is completely filled with cement grout within a

reasonably short time after completion of the tunnel, then the tunnel liner plates need not be galvanized and coated.

Reinforced concrete pipe may be used for a casing. For a cover depth of 14' or less, reinforced concrete pipe shall conform to the current ASTM C76, Class V, Wall C. It may be used in open cut methods of installation, or when suitably designed for jacking methods. For depth of cover greater than 14', the designer shall prepare an engineering analysis in accordance with the current, at time of Application, AREMA Manual for Railway Engineering, Chapter 8, Part 10. For elliptical or arch pipe, where reinforced concrete pipe with supporting strength of the pipe (D) equal to 3,000 pounds per linear foot is not available, a separate engineering analysis shall be submitted.

For flexible casing pipe, a minimum vertical deflection of the casing pipe of 3 percent of its diameter plus ½" shall be provided so that no loads from the roadbed, track, traffic or casing pipe itself are transmitted to the carrier pipe. When insulators are used on the carrier pipe, the inside diameter of flexible casing pipe shall be at least 2" greater than the outside diameter, including insulation, of the carrier pipe for pipe less than 8" in diameter; at least 3¼" greater for pipe 8" to 16" inclusive in diameter; and at least 4½" greater for pipe 18" and over in diameter.

When steel casing pipe is used, the joints shall be fully closed by welding or mechanical means to ensure tightness. The closure shall develop the full strength of the casing pipe. Closure details shall be shown on the plans.

2.5 SIGNS

All pipelines (except those in streets where it would not be practical to do so) shall be prominently marked at Right-of-Way lines (on both sides of track for under crossings) by durable, weatherproof signs located on the edge of Right-of-Way over the centerline of the pipe. Signs shall show the following:

1. Name and address of Owner
2. Contents of Pipe
3. Pressure in Pipe
4. Depth of pipe below grade at point of sign
5. Emergency telephone in event of pipe rupture

The material, size of lettering and the installation method of the sign shall be as approved by Amtrak. For pipelines running longitudinally on Amtrak property, signs shall be placed over the pipe (or offset and appropriately marked) at all changes in direction of the pipeline. Such signs should also be located so that when standing at one sign the next adjacent sign in either direction is visible. The owner shall maintain all signs on Amtrak Right-of-Way as long as the Occupancy Permit is in effect. Any entry on to Amtrak property shall be made in accordance with all provisions of the Right of Entry Permit.

2.6 EMERGENCY SHUT-OFF VALVES

Accessible emergency shut-off valves shall be installed on each side of the railroad at locations selected by Amtrak. Where pipelines are provided with automatic control stations and within distances approved by Amtrak, no additional valves will be required. Description of location of those facilities shall be part of the Application.

2.7 DEPTH OF PIPELINE INSTALLATION

Pipe under Amtrak tracks and across Amtrak Right-of-Way shall be not less than 5½' from bottom of tie to top of casing at its closest point. On other portions of Right-of-Way where casing is not directly beneath any track, the depth from ground surface or from bottom of ditches to top of casing shall be not less than 4', unless otherwise specified herein.

2.8 CATHODIC PROTECTION

Cathodic protection shall be applied to all pipelines and casings carrying flammable substances in accordance with ANSI Standards.

Where casing and/or carrier pipe is cathodically protected by other than anodes, Amtrak shall be notified and a suitable test shall be made and witnessed by Amtrak to insure that all structures and facilities are adequately protected from the cathodic current in accordance with the recommendation of Reports of Correlating Committee on Cathodic Protection, current issue by the National Association of Corrosion Engineers.

2.9 SOIL INVESTIGATIONS

For all pipe crossings, soil borings or other soil investigations approved by Amtrak shall be made to determine the nature of the underlying material (see Part 1, Section 1.2 for procedure to enter Amtrak property). Boring location plans need to be approved by Amtrak in advance of taking of the borings.

Borings shall be made on each side of the tracks, on the centerline of the pipe crossings, and as close to the tracks as practicable.

Soil borings shall be made in accordance with the current, at time of Application, AREMA Manual for Railway Engineering, Chapter 8, Part 22. Soils shall be investigated by the split-spoon and/or thin walled tube method, and rock shall be investigated by the coring method, as appropriate. The location of the carrying pipe and/or casing shall be superimposed on the Boring Location Plan before submission to Amtrak.

Soil boring logs shall clearly indicate all of the following:

1. Boring number as shown on Boring Location Plan.

2. Elevation of ground at boring, using the same NGVD (National Geodetic Vertical Datum) or NAVD (North American Vertical Datum) as the pipeline construction plans. The location of the carrier pipe and/or casing pipe shall be superimposed on the boring logs before submission to Amtrak.

3. Description or soil classification of each soil sample encountered shall be made in accordance with the Unified Soils Classification System. Classification and description of rock shall include type, local designation, joint or fracture frequency, foliation and, joint dip, surface degree of weathering and any other pertinent observations concerning the drilling and recovery.

4. Elevations or depth from surface for each change in strata.

5. Identification of depth where samples were taken or attempted and percentage of recovery.

6. Location of ground water at time of sampling and, if available, subsequent readings shall be reported. Observed conditions, such as depth of hole or casing, drill fluid, recent precipitation, surface elevation of nearby bodies of water and time permitted for the stabilized level to occur shall be noted.

7. Natural dry density in pounds per cubic foot for all strata.

8. Unconfined compressive strength in tons per square foot for all cohesive strata.

9. Natural water content (percent), liquid limit (percent) and plastic limit (percent) for all cohesive soils.

10. Standard Penetration Test N Value in blows per foot (or inches/blow), for each sample obtained or unsuccessful attempt.

11. Samples shall be retained for review by Amtrak.

12. Failed boring attempts shall be logged and reported.

13. All borings and attempts shall be tremie grouted with non-shrink grout or other approved material. The quantity of grout material used shall be measured and reported.

Soil boring logs shall be accompanied with a plan drawn to scale showing the location of borings in relation to the tracks and the proposed pipe location, the elevation of ground surface at each boring, and the elevation of the base of rail of the tracks. Elevations shall be shown to the nearest 0.1 foot.

PART 3 – CONSTRUCTION

3.1 CONSTRUCTION INSPECTION REQUIREMENTS

The Applicant shall provide full time on-site inspection by a Resident Engineer during the installation of temporary and permanent facilities approved by Amtrak. This inspection shall be under the supervision of a Registered Professional Engineer licensed in the State in which the work is being performed. The Professional Engineer shall certify that the facilities were installed in accordance with these specifications and the approved plans. The on-site Resident Engineer shall coordinate the activities of the contractor with the Amtrak Project Engineer. All work shall be performed in accordance with Amtrak Engineering Practice EP3014 Maintenance and Protection of Railroad Traffic during Contractor Operations.

3.2 INSTALLATION METHODS

Open Cut or Braced Trench

1. Installation by open cut or braced trench methods shall comply with the current, at time of Application, AREMA Manual for Railway Engineering, Chapter 1, Part 4. At least 60 days may be required for Amtrak review and approval of open cut or braced trench methods.
2. Where Amtrak has approved the open cut method, pipe shall be installed on a Class B bed of compacted graded aggregate. Sand backfill shall be used to fill around the sides and on top of the pipe. A colored warning tape shall be placed a minimum of 12" above the top of the pipe. Additional backfill shall be well-graded, clean granular soil having less than 20 percent by dry weight passing No. 200 US STD sieve. Maximum aggregate size shall be ½". Backfill shall be placed in loose 8" layers and compacted to at least 95 percent of its maximum density at within 2% of the optimum moisture content as determined in accordance with current ASTM D1557 (AASHTO T180).
3. Prior to the start of an open cut installation, the contractor shall have all materials on site, including emergency stand-by handling equipment.

Jacking

1. Jacking of casing pipe shall be in accordance with the current AREMA Manual for Railway Engineering, Chapter 1, Part 4. This operation shall be continuous once started, and shall be conducted without hand-mining ahead of the pipe and without the use of any type of boring, auguring, or drilling equipment. Ordinarily 36-inch diameter pipe is the minimum size that should be used. Bracing and backstops shall be designed and jacks of sufficient rating shall be used so that the jacking can be progressed without stoppage (except for adding lengths of pipe) until the leading edge of the pipe has reached the receiving pit or is at least 25' from the centerline of the last track.
2. When jacking reinforced concrete pipe, grout holes, tapped for no smaller than 1½" pipe, shall be cast into pipe at manufacture. Grout holes shall be spaced at approximately 3' around the circumference and 4' longitudinally with a minimum of three grout holes around the circumference. Immediately upon completion of jacking operations, the installation shall be pressure grouted.

Horizontal Directional Drilling / Directional Boring

1. Due to the unique circumstances and conditions encountered along the railroad Right-of-Way (ROW), each Horizontal Directional Drilling (HDD) request will be reviewed and approved at Amtrak's sole discretion on a case by case basis.
2. The applicant utilizing the HDD method of installation shall meet all the requirements found in EP 3005, Section 02082A, Horizontal Directional Drilling / Directional Boring. If HDD is deemed unacceptable by Amtrak, the applicant may consider other installation techniques contained within EP 3005, Section 02081A, Pipeline Occupancy, for the installation of the pipeline or utility crossing.

Tunneling with Liner Plate

1. Tunneling operations shall be conducted as approved by Amtrak. Care shall be exercised in trimming the surface of the excavated section in order that the steel liner plates fit snugly against undisturbed material.
2. Excavation shall not be advanced ahead of the previously installed liner plates any more than is necessary for the installation of the succeeding liner plate. The vertical face of the excavation shall be supported as necessary to prevent sloughing.
3. At any interruption of the tunneling operation, the heading shall be completely bulkheaded.
4. Unless otherwise approved by Amtrak the tunneling shall be conducted continuously on a 24-hour basis, until the tunnel liners extend at least equal to 25' beyond the centerline of the last track.
5. A uniform mixture of 1:6 cement grout shall be placed under pressure behind the liner plates to fill any voids existing between the liner plates and the undisturbed material. Grout holes tapped for no smaller than ½" pipe, spaced at approximately 3' around the circumference of the tunnel liner shall be provided in every third ring. Grouting shall start at the lowest hole in each grout panel and proceed upwards simultaneously on both sides of the tunnel. A threaded plug shall be installed in each grout hole as the grouting is completed at that hole.
6. Grouting shall be kept as close to the heading as possible, using grout stops behind the liner plates if necessary. Grouting shall proceed as directed by Amtrak, but in no event shall more than six linear of tunnel be progressed beyond the grouting.

Tunneling Shields

1. All pipes 60" and larger in outside diameter shall be placed with the use of a tunneling shield unless otherwise approved by Amtrak. Pipes of smaller diameter may also require a shield when, at the sole discretion of Amtrak, soil or other conditions indicate its need.
2. The shield shall be of steel construction designed to support railroad track loading as specified herein, in addition to other loadings it must sustain. The advancing face shall be provided with a hood, extending no less than 20 inches beyond the face and extending around no less than the upper 240 degrees of the total circumference. It shall be of sufficient length to permit the installation of at least one complete ring of liner plates within the shield before it is advanced for the installation of the next ring of liner plates. It shall conform to and not exceed the outside dimensions of the pipe being placed by more than one inch at any point on the periphery unless otherwise approved by Amtrak.
3. The shield shall be adequately braced and provided with necessary appurtenances for completely bulk heading the face with horizontal breast boards and arranged so that the excavation can be benched as may be necessary. Excavation shall not be advanced beyond the edge of the hood, except in rock.
4. Manufacturer’s shop detail plans and manufacturer’s computations showing the ability of the tunnel liner plates to resist the jacking stresses shall be submitted to Amtrak for approval.
5. The detail shield plans and design calculations prepared by a Registered Professional Engineer licensed in the state in which the work is being performed shall be submitted to Amtrak for approval. No work shall proceed until such approval is obtained.

Boring

1. This method consists of pushing the pipe into the fill with a boring auger rotating within the pipe to remove the soil. When augers or similar devices, are used for pipe emplacement, the front of the pipe shall be provided with mechanical arrangements or devices that will positively prevent the auger and cutting head from leading the pipe so that there will be no unsupported excavation ahead of the pipe. The auger and cutting head arrangement shall be removable from within the pipe in the event an obstruction is encountered. The over-cut by the cutting head shall not exceed the outside diameter of the pipe by more than one half inch. The face of cutting head shall be arranged to prevent the free flow of soft or poor material. The use of water of other liquids to facilitate casing emplacement and spoil removal is prohibited. Plans

and descriptions of the arrangement to be used shall be submitted to Amtrak for approval and no work shall proceed until such approval is obtained.

2. Any method which employs simultaneous boring and jacking or drilling and jacking for pipes over 8" in diameter which does not have the above approved arrangement will not be permitted. For pipes 8" and less in diameter, auguring or boring without this arrangement may be considered for use only as approved by Amtrak.

3.3 CONSTRUCTION OPERATIONS

All construction operations shall be conducted so as not to interfere with, interrupt, or endanger the operation of trains or damage, destroy, or endanger the integrity of railroad facilities. All work on and near Amtrak property shall be conducted in accordance with Amtrak safety rules and regulations. The contractor shall secure and comply with the Amtrak safety rules and shall give written acknowledgment to Amtrak that they have been received, read, and understood by the contractor and his employees. Construction operations will be subject to Amtrak inspection at any and all times.

If an obstruction is encountered during installation to stop the forward action of the pipe and it becomes evident that it is impossible to advance the pipe, operations will cease and the pipe shall be abandoned in place and filled completely with grout.

Bored or jacked installations shall have a bored hole essentially the same as the outside diameter of the pipe plus the thickness of the protective coating. If voids should develop or if the bored hole diameter is greater than the outside diameter of the pipe (plus coating) by more than approximately 1 inch, grouting or other methods approved by Amtrak shall be employed to fill such voids.

Pressure grouting of the soils or freezing of the soils before or during jacking, boring, or tunneling may be required at the discretion of Amtrak to stabilize the soils, control ground water, prevent loss of material and prevent settlement or displacement of embankment and/or tracks. Grout shall be cement, chemical or other special injection material selected to accomplish the necessary stabilization.

The material to be used and the method of injection shall be prepared by a Registered Professional Engineer licensed in the state in which the work is being performed, or by an experienced and qualified company specializing in this work and submitted for approval to Amtrak before the start of work. Proof of experience and competency shall accompany the submission. Material Safety Data sheet shall be provided for all materials.

When the presence of surface, ground and/or artesian water is known or expected to be encountered, pumps of sufficient capacity to handle the flow shall be maintained at the site by the contractor, and upon approval of Amtrak, the contractor shall operate them. Pumps in operation shall be constantly attended on a 24-hour basis, until, in the sole judgment of Amtrak, the operation can be safely halted. When dewatering, close observation by optical survey, or other instrumentation as required, to verify the adequacy of work, shall be maintained to detect any settlement or displacement of railroad embankment, tracks and facilities. A detailed plan of water control for work including instrumentation shall be submitted by the Applicant for approval by Amtrak.

All cranes, lifts, or other equipment that will be operated in the vicinity of the Railroad's electrification and power transmission facilities shall be operated and electrically grounded as required by EP3014 section 01141A and shall comply with OSHA Safety and Health Standards, Page 175, Subpart N1926.950. OSHA 2207, Revised 1983, or as provided by the High Voltage Proximity Act.

At all times when the work is being progressed, a field supervisor for the work with no less than 12 months experience in the operation of the equipment being used shall be present. If boring, drilling, or similar machines are being used, the machine operator also shall have no less than 12 months experience in the operation of the equipment being used.

Blasting will not usually be permitted under or on Amtrak Right-of-Way. If the use of blasting is proposed, technical justification of its necessity must be submitted by review and approval. If blasting is approved, it must be performed in accordance with EP3003.

Equipment or personnel working closer than 15 feet to the centerline of an adjacent track shall be considered as fouling that track. Insofar as possible, all operations shall be conducted no less than this distance. Operations closer than 15' to the centerline of a track shall be conducted only with the permission of, and as directed by, a duly qualified Amtrak employee present at the worksite. Special arrangements must be made at

least 21 working days in advance of the work, where fouling of track or structures is required for access. These operations require the prior approval of Amtrak.

Crossing of tracks at grade by equipment and personnel is prohibited, except by prior arrangement with, and as directed by Amtrak.

Support of Excavation Adjacent to Track.

1. **Launching and Receiving Pits**
   - **a.** The location and dimensions of all pits or excavations shall be shown on the plans. The distance from centerline of adjacent track to face of pit or excavation shall be clearly labeled. The elevation of the bottom of the pit or excavation must be shown on the profile.
   - **b.** The face of all pits shall be located at a minimum of 25' from the centerline of adjacent track, measured at right angles to track, unless otherwise approved by Amtrak.
   - **c.** If the bottom of the pit excavation intersects the theoretical railroad embankment line (see EP3014, Section 02261A, Requirements for Temporary Sheeting and Shoring to Support Amtrak Tracks, Sketch 1), interlocking steel sheet piling, driven prior to excavation, must be used to protect the track stability. The use of trench boxes or similar devices is not acceptable in this area.
   - **d.** Design plans and computations for the pits, signed and sealed by a Registered Professional Engineer licensed in the State in which the work is being performed, must be submitted by the Applicant at the time of application or by the contractor prior to the start of construction. If the pit design is to be submitted by the contractor, the project specification must require the contractor to obtain Amtrak's approval prior to beginning any work on or which may affect Amtrak's property.
   - **e.** The sheeting shall be designed to support all lateral forces caused by the earth, railroad and other surcharge loads.
   - **f.** After construction and backfilling, all sheet piling that is not removed within 10' of centerline of adjacent track must be cut off per EP3014, Section 02261A, Requirements for Temporary Sheeting and Shoring to support Amtrak tracks, paragraph 3.1.F.
   - **g.** All excavated areas are to be illuminated (flashing warning lights not permitted) fenced and otherwise protected as directed by Amtrak.

3.4 SUPPORT OF TRACKS

When the jacking, drilling, tunneling or boring method of installation is used, and depending upon the size and location of the crossings, temporary track supporting structures shall be installed. The requirement for these temporary structures may be deleted only with the approval of Amtrak.

Unless otherwise agreed, all work involving rail, ties and other track material will be performed by Amtrak. The Applicant shall reimburse Amtrak for all costs associated with the installation and removal of track supports.

When excavation for a pipeline or other structure will be within the theoretical railroad embankment line (see EP3014, Section 02261A, Requirements for Temporary Sheeting and Shoring to Support Amtrak Tracks, Sketch 1) of an adjacent track, interlocking steel sheet piling will be required to protect the track.

Prior to the start of construction, the applicant must deliver a stockpile (minimum 10 tons) of approved railroad ballast to an area designated by Amtrak at the project site.

3.5 PIPELINES IN ROADWAYS UNDER BRIDGES

Pipelines to be installed under bridges that carry Amtrak tracks above a roadway shall be designed and constructed in conformance with all applicable Sections of this specification. The casing pipe, when required, may be designed for the applicable highway loading(see Sketch 4).

3.6 PIPELINES ON BRIDGES

Pipelines carrying flammable substances or non-flammable substances that by their nature might cause damage if escaping on or near railroad facilities or personnel shall not be installed on bridges over railroad tracks or bridges carrying railroad tracks.

In special cases when it can be demonstrated to Amtrak's satisfaction that such an installation is necessary and that no practicable alternative is available, Amtrak may permit the installation and only by special design approved by Amtrak (see Sketch 5).

Pipelines on bridges shall be so located as to minimize the possibility of damage from vehicles, railroad equipment, vandalism and other external causes. They shall be encased in a casing pipe. Where appropriate, permanent barriers shall be constructed at each end of the bridge to prevent trespassers from crossing the bridge via the pipe casing.

3.7 BONDING AND GROUNDING OF PIPELINES ON BRIDGES IN ELECTRIFIED TERRITORY

Carrier pipe shall be enclosed in a metal casing that is isolated from carrier pipe by approved insulators having a dielectric value of not less than 25 kV that provide an air gap between carrier pipe and casing of not less than 2 inches, in accordance with ANSI or NESC Standards.

Carrier pipe supporting hangers, mountings or cradles shall provide an insulation value of not less than 25 kV and provide an air gap of not less than 2 inches between casing and any portion of mounting assembly.

Casing shall be bonded to Amtrak's return conductor at each end through bridge steel or direct when bridge members are of non-conductive material conforming to Amtrak Standards.

The casing and installation equipment shall be bonded and grounded to an earth ground of not more than 25 ohms resistance to ground for construction. The applicant shall monitor adequacy of the ground.

3.8 DRAINAGE

Occupancies shall be designed and their construction shall be accomplished so that adequate and uninterrupted drainage of Amtrak Right-of-Way is maintained. If, in the course of construction it may be necessary to block a ditch, pipe or other drainage facility, temporary pipes, ditches or other drainage facilities shall be installed to maintain adequate drainage as approved by Amtrak. Upon completion of the work, the temporary facilities shall be removed and the permanent facilities restored.

Where disturbance of the ground may result in contamination of the ballast or this contamination occurs as result of a wash out, the Applicant shall be responsible for costs to restore the track and structure. Temporary soil erosion measures for protecting the track shall be submitted as part of the construction plan and approved by Amtrak.

Under no circumstances should additional flow be routed onto Amtrak Right-of-Way, either during construction or upon completion.

3.9 INSPECTION AND TESTING REQUIREMENTS FOR HAZARDOUS MATERIALS

For pipelines carrying flammable or hazardous materials, ANSI Codes B31.8 and B31.4, current at time of constructing the pipeline, shall govern the inspection and testing of the facility on Amtrak property except that proof-testing of strength of carrier pipe shall be in accordance with the requirements of ANSI Codes B31.8 for location Classes 2, 3, or 4 or ANSI Code B31.4, as applicable, for all pipelines carrying oil, liquefied petroleum gas, natural or manufactured gas and other flammable substances.

PART 4 – INFORMATION SKETCHES

4.1 The following Information Sketches are attached:

Sketch 1 – Information to be shown on Plan Section of drawing.

Sketch 2 – Information to be shown on Profile Section of drawing.

Sketch 3 – Longitudinal Occupancy.

Sketch 4 – Pipeline in Roadway Under Railroad Bridge

Sketch 5 – Details for Bonding and Grounding of Pipelines

Sketch 6 – Pipe Crossing Data Sheet

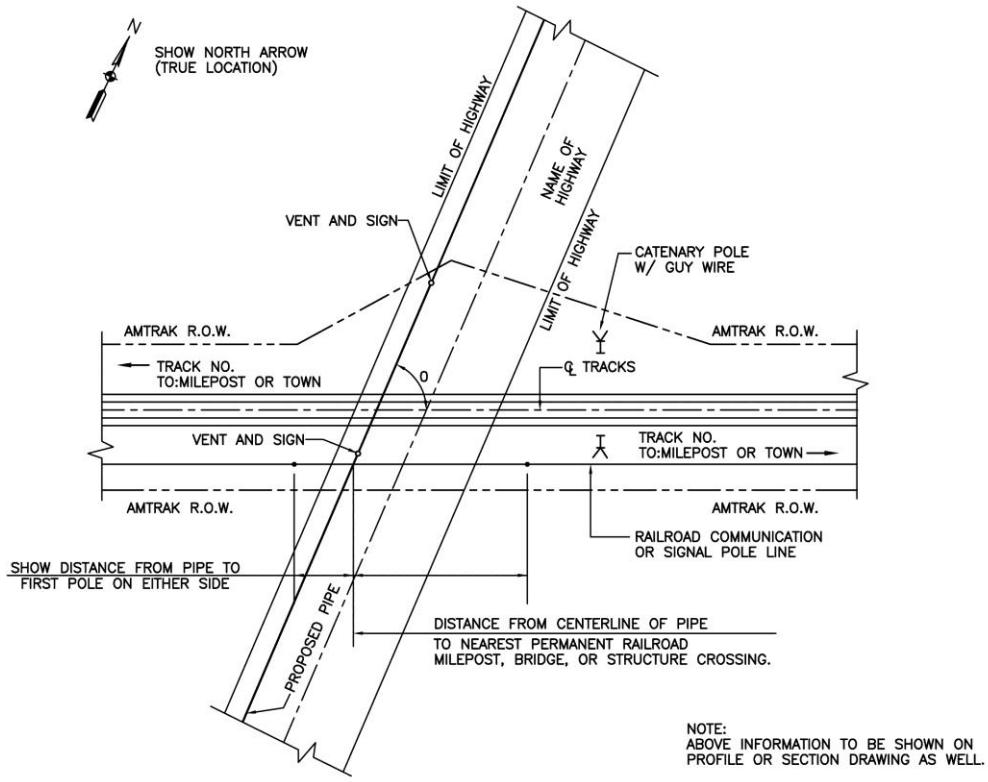

NOTE:
ABOVE INFORMATION TO BE SHOWN ON
PROFILE OR SECTION DRAWING AS WELL.

PLAN

SCALE:

NOTES:

1. IF MANHOLES ARE PLACED ON AMTRAK PROPERTY, DETAILS OF SAME, WITH CLEARANCES TO NEAR RAILS ARE TO BE SHOWN ON THE DRAWINGS.
2. IF THE PROPOSED PIPE IS TO SERVE A NEW DEVELOPMENT, A MAP SHOWING THE AREA IN RELATION TO ESTABLISHED AREAS AND ROADS IS TO BE SUBMITTED WITH THE REQUEST.
3. IF THE PROPOSED PIPE IS NOT WHOLLY WITHIN HIGHWAY LIMITS, A REASONABLE CONTINUATION OF THE PIPE SHOULD BE SHOWN.
4. SCALE OF DRAWING TO BE SHOWN.
5. BURIED COMMUNICATION AND SIGNAL LINES MAY BE PRESENT. OTHER UTILITIES MAY ALSO BE ENCOUNTERED. PERMITTEE MUST VERIFY PRESENCE AND LOCATION OF ANY SUB SURFACE LINE PRIOR TO STARTING CONSTRUCTION.
6. PROVIDE DIMENSIONS WHERE INDICATED. INCLUDING ANGLE OF CROSSING.

INFORMATION TO BE SHOWN ON PLAN SECTION OF DRAWING

Amtrak®

Office of Chief Engineer
STRUCTURES
National Railroad Passenger Corporation
30th Street Station, Philadelphia, Pennsylvania 19104

SKETCH 1
EP3005 SPECIFICATION

Designed AEC	Drawn JLM	Date 3/01/02

File No:	
Design No:	
Sheet No.	1 of 6
Dwg. No.	SK-1

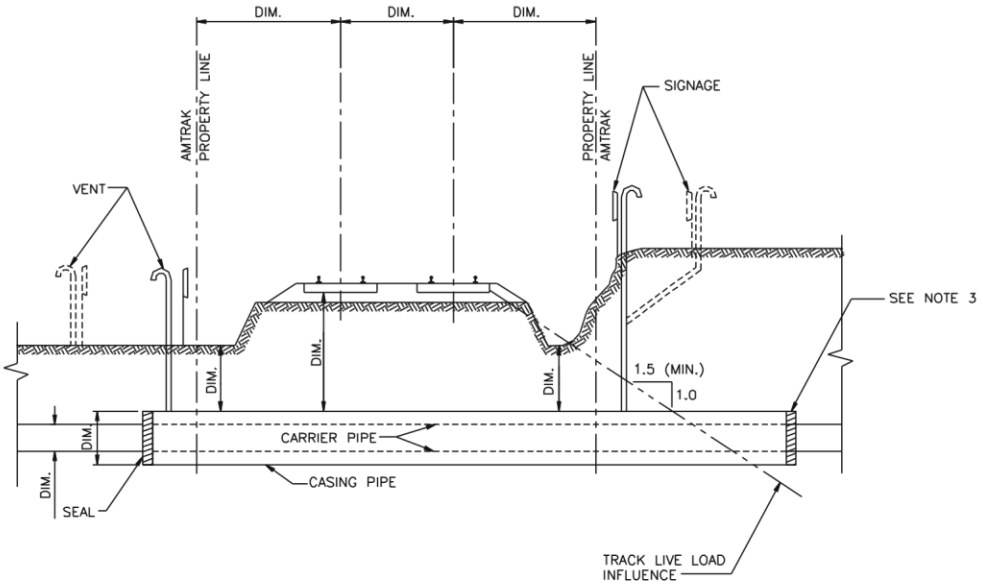

SECTION

SCALE:

NOTES:

1. ABOVE INFORMATION AND DIMENSIONS TO BE SHOWN ON PROFILE SECTION DRAWING.
2. VENTS IF REQUIRED.
3. END OF CASING PIPE MUST BE OUTSIDE THE TRACK LIVE LOAD INFLUENCE

INFORMATION TO BE SHOWN ON PROFILE SECTION OF DRAWING

Amtrak®	Office of Chief Engineer STRUCTURES National Railroad Passenger Corporation 30th Street Station, Philadelphia, Pennsylvania 19104	SKETCH 2 EP3005 SPECIFICATION Designed AEC Drawn JLM Date 9/10/02	File No: Design No: Sheet No. 2 of 6 Dwg. No. SK-2 REV 1

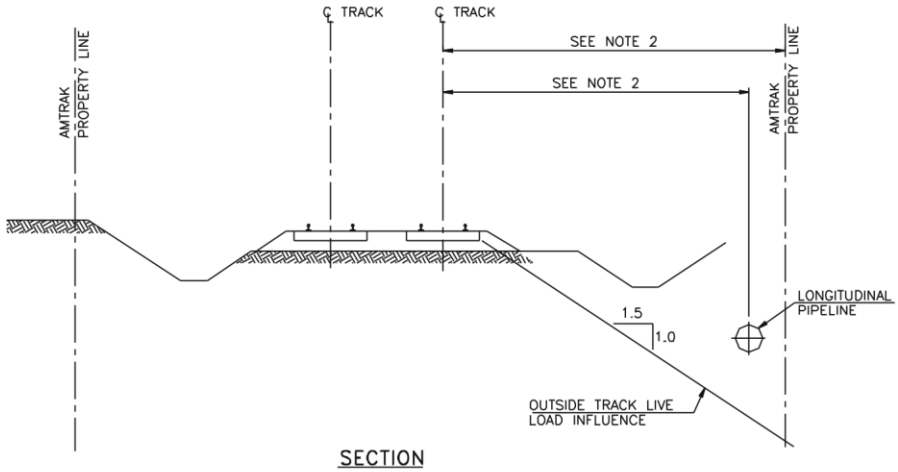

SECTION

SCALE:

NOTE:

1. ALL INFORMATION TO BE SHOWN TYPICALLY ON ALL CROSS SECTIONS AND PROFILE DRAWINGS.
2. SHOW THE DIMENSION ON PLAN VIEW.

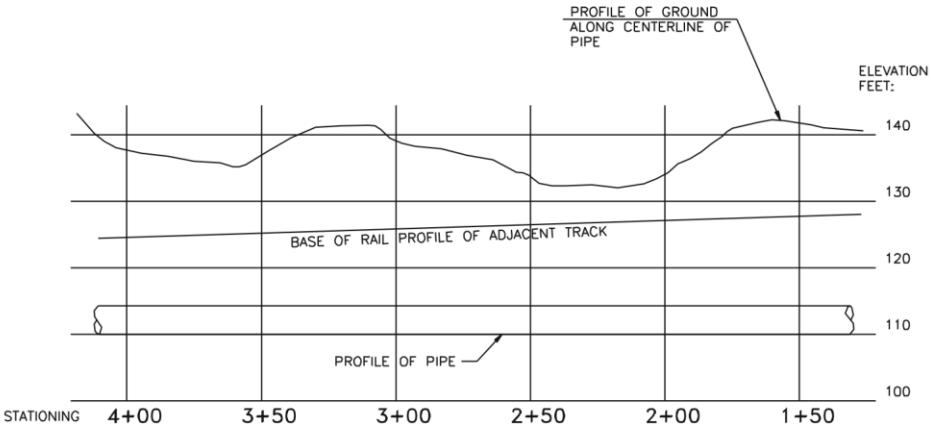

PROFILE

SCALE: VERT.
HORIZ.

LONGITUDINAL OCCUPANCY

Office of Chief Engineer
STRUCTURES
National Railroad Passenger Corporation
30th Street Station, Philadelphia, Pennsylvania 19104

SKETCH 3
EP3005 SPECIFICATION

Designed	AEC	Drawn	JLM	Date	9/10/02

File No:	
Design No:	
Sheet No.	3 of 6
Dwg. No.	SK-3 REV 1

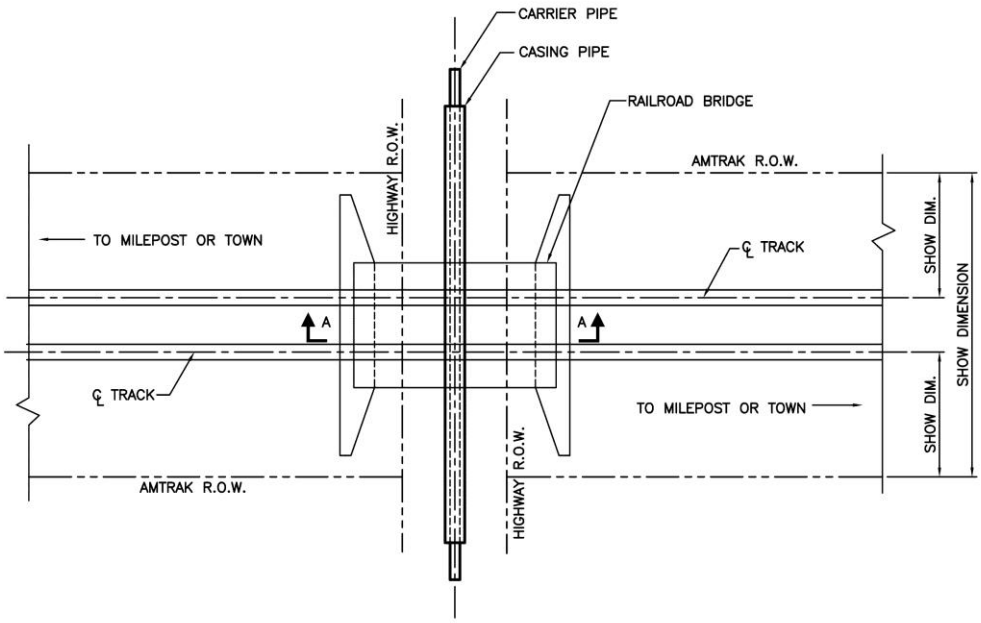

PLAN

SCALE:

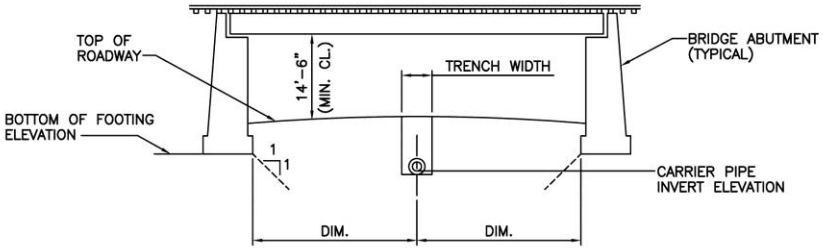

SECTION A–A

SCALE:

NOTE:

PIPE OR EXCAVATION MUST NOT BE WITHIN THE 1 TO 1 SLOPE LINE THAT EXTENDS FROM BOTTOM OF FOOTING.

PIPELINE IN ROADWAY UNDER RAILROAD BRIDGE

Amtrak®

Office of Chief Engineer
STRUCTURES
National Railroad Passenger Corporation
30th Street Station, Philadelphia, Pennsylvania 19104

SKETCH 4
EP3005 SPECIFICATION

Designed AEC	Drawn JLM	Date 3/01/02	

File No:	
Design No:	
Sheet No.	4 of 6
Dwg. No.	SK–4

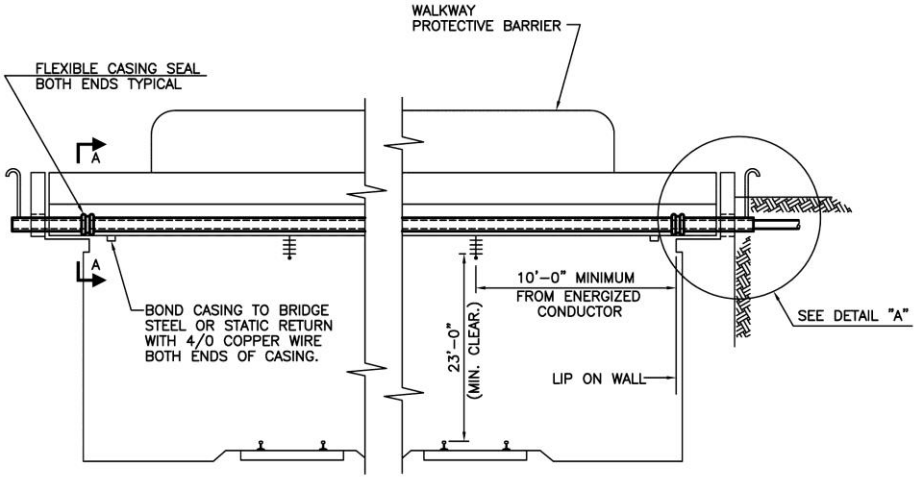

ELEVATION

SCALE:

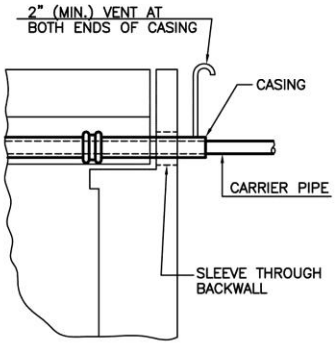

DETAIL "A"

SCALE:

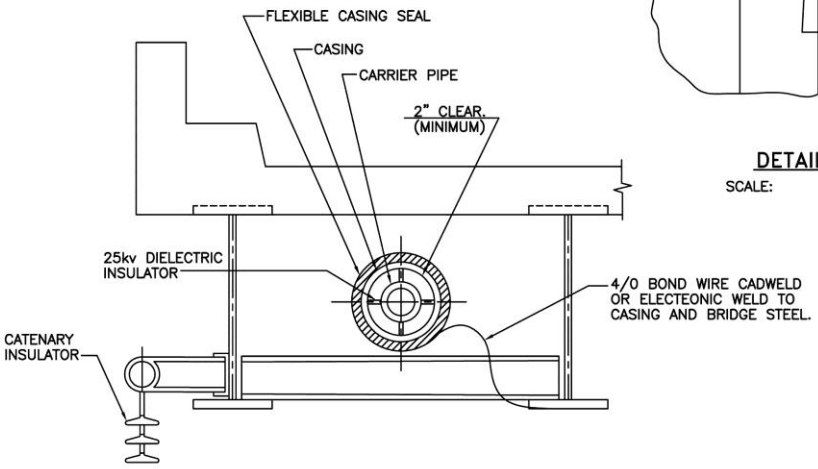

SECTION A–A

SCALE:

DETAILS FOR BONDING AND GROUNDING OF PIPELINE

Amtrak®

Office of Chief Engineer
STRUCTURES
National Railroad Passenger Corporation
30th Street Station, Philadelphia, Pennsylvania 19104

SKETCH 5
EP3005 SPECIFICATION

Designed AEC	Drawn JLM	Date 3/01/02

File No:	
Design No:	
Sheet No.	5 of 6
Dwg. No.	SK–5

PIPE CROSSING DATA SHEET

IN ADDITION TO PLAN AND PROFILE OF CROSSING, DRAWINGS SUBMITTED FOR AMTRAK APPROVAL SHALL CONTAIN THE FOLLOWING INFORMATION:

	CARRIER PIPE	CASING PIPE
CONTENTS TO BE HANDLED	_____	_____
NORMAL OPERATING PRESSURE	_____	_____
NOMINAL SIZE OF PIPE	_____	_____
OUTSIDE DIAMETER	_____	_____
INSIDE DIAMETER	_____	_____
WALL THICKNESS	_____	_____
WEIGHT PER FOOT	_____	_____
MATERIAL	_____	_____
PROCESS OF MANUFACTURE	_____	_____
SPECIFICATION	_____	_____
GRADE OR CLASS	_____	_____
TEST PRESSURE	_____	_____
TYPE OF JOINT	_____	_____
TYPE OF COATING	_____	_____
DETAILS OF CATHODIC PROTECTION	_____	_____
DETAILS OF SEAL OR PROTECTION AT ENDS OF CASING	_____	_____
METHOD OF INSTALLATION	_____	_____

CHARACTER OF SUBSURFACE MATERIAL AT THE CROSSING LOCATION _____ (UNIFIED SOIL CLASS)

APPROXIMATE ELEVATION OF GROUND WATER LEVEL _____ FEET

SOURCE OF INFORMATION OF SUBSURFACE CONDITIONS (BORING, TEST PITS OR OTHER)

NOTE:

ANY SOIL INVESTIGATION MADE ON RAILROAD PROPERTY OR ADJACENT TO TRACKS SHALL BE CARRIED ON UNDER THE SUPERVISION OF AMTRAK.

Amtrak®

Office of Chief Engineer
STRUCTURES
National Railroad Passenger Corporation
30th Street Station, Philadelphia, Pennsylvania 19104

SKETCH 6
EP3005 SPECIFICATION

Designed AEC | Drawn JLM | Date 3/01/02

File No:	
Design No:	
Sheet No.	6 of 6
Dwg. No.	SK-6

SECTION 01141A – SAFETY AND PROTECTION OF RAILROAD TRAFFIC AND PROPERTY

PART 1 - GENERAL

1.1 SCOPE

A. This specification describes the safety procedures and protection provisions for Contractors and Permittees entering and working upon railroad property.

B. Use of this specification is as required by Amtrak, as described in Amtrak Engineering Practice EP3014.

1.2 RELATED DOCUMENTS

A. Drawings and general provisions of the Contract, including General and Supplementary Conditions and other Division 1 Specification Sections, apply to this Section.

1.3 DEFINITIONS

A. CHIEF ENGINEER: Amtrak Chief Engineer

B. RAILROAD: National Railroad Passenger Corporation (Amtrak), and/or the duly authorized representative

C. ENGINEERING PRACTICE: Amtrak Engineering Practices establish a system of uniform practices, notices and instructions for the Amtrak Engineering Department, providing current, permanent and temporary, departmental procedures and policies.

PART 2 - PRODUCTS (Not Used)

PART 3 - EXECUTION

3.1 PRE-ENTRY MEETING

A. Before entry of Permittee and/or Contractors onto Railroad's property, a pre-entry meeting shall be held at which time Permittee and/or Contractors shall submit for written approval of the Chief Engineer, plans, computations and a detailed description of proposed methods for accomplishing the work, including methods for protecting Railroad's traffic. Any such written approval shall not relieve Permittee and/or Contractor of their complete responsibility for the adequacy and safety of their operations.

3.2 RULES, REGULATIONS AND REQUIREMENTS

A. Railroad traffic shall be maintained at all times with safety and continuity, and Permittee and/or Contractors shall conduct their operations in compliance with all rules, regulations, and requirements of Railroad (including these Specifications) with respect to any work performed on, over, under, within or adjacent to Railroad's property. Permittee and/or Contractors shall be responsible for acquainting themselves with such rules, regulations and requirements. Any violation of Railroads safety rules, regulations, or requirements shall be grounds for the immediate suspension of the Permittee and/or Contractor work, and the re-training of all personnel, at the Permittee's expense.

3.3 MAINTENANCE OF SAFE CONDITIONS

A. If tracks or other property of Railroad are endangered during the work, Permittee and/or Contractor shall immediately take such steps as may be directed by Railroad to restore safe conditions, and upon failure of Permittee and/or Contractor to immediately carry out such direction, Railroad may take whatever steps are reasonably necessary to restore safe conditions. All costs and expenses of restoring safe conditions, and of repairing any damage to Railroad's trains, tracks, right-of-way or other property caused by the operations of Permittee and/or Contractors, shall be paid by Permittee.

3.4 PROTECTION IN GENERAL

A. Permittee and/or Contractors shall consult with the Chief Engineer to determine the type and extent of protection required to insure safety and continuity of railroad traffic. Any Inspectors, Track Foremen, Track Watchmen, Flagman, Signalmen, Electric Traction Linemen, or other employees deemed necessary by Railroad, at its sole discretion, for protective services shall be obtained from Railroad by Permittee and/or Contractors. The cost of same shall be paid directly to Railroad by Permittee. The provision of such employees by Railroad, and any other precautionary measures taken by Railroad, shall not relieve Permittee and/or Contractors from their complete responsibility for the adequacy and safety of their operations.

3.5 PROTECTION FOR WORK NEAR ELECTRIFIED TRACK OR WIRE

A. Whenever work is performed in the vicinity of electrified tracks and/or high voltage wires, particular care must be exercised, and Railroad's requirements regarding clearance to be maintained between equipment and tracks and/or energized wires, and otherwise regarding work in the vicinity of electrified tracks, must be strictly observed. No employees or equipment will be permitted to work near overhead wires, except when protected by a Class A employee of Railroad. **Permittee and/or Contractors must supply an adequate length of grounding cable (4/0 copper with approved clamps) for each piece of equipment working near or adjacent to any overhead wire**.

3.6 FOULING OF TRACK OR WIRE

A. No work will be permitted within twenty-five (25) feet of the centerline of track or the energized wire or have potential of getting within twenty-five (25) feet of track wire without the

approval of the Chief Engineer's representative. Permittee and/or Contractors shall conduct their work so that no part of any equipment or material shall foul an active track or overhead wire without the written permission of the Chief Engineer's representative. When Permittee and/or Contractors desire to foul an active track, they must provide the Chief Engineer's representative with their site-specific work plan a minimum of twenty-one (21) working days in advance, so that, if approved, arrangements may be made for proper protection of Railroad. Any equipment shall be considered to be fouling a track or overhead wire when located (a) within fifteen (15) feet from the centerline of the track or within fifteen (15) feet from the wire, or (b) in such a position that failure of same, with or without a load, would bring it within fifteen (15) feet from the centerline of the track or within fifteen (15) feet from the wire and requires the presence of the proper Railroad protection personnel.

B. If acceptable to the Chief Engineer's representative, a safety barrier (approved temporary fence or barricade) may be installed at fifteen (15) feet from centerline of track or overhead wire to afford the Permittee and/or Contractor with a work area that is not considered fouling. Nevertheless, protection personnel may be required at the discretion of the Chief Engineer's representative.

3.7 TRACK OUTAGES

A. Permittee and/or Contractors shall verify the time and schedule of track outages from Railroad before scheduling any of their work on, over, under, within, or adjacent to Railroad's right-of-way. Railroad does not guarantee the availability of any track outage at any particular time. Permittee and/or Contractors shall schedule all work to be performed in such a manner as not to interfere with Railroad operations. Permittee and/or Contractors shall use all necessary care and precaution to avoid accidents, delay or interference with Railroad's trains or other property.

3.8 DEMOLITION

A. During any demolition, the Contractor must provide horizontal and vertical shields, designed by a Professional Engineer registered in the state in which the work takes place. These shields shall be designed in accordance with the Railroad's specifications and approved by the Railroad, so as to prevent any debris from falling onto the Railroad's right-of-way or other property. A grounded temporary vertical protective barrier must be provided if an existing vertical protective barrier is removed during demolition. In addition, if any openings are left in an existing bridge deck, a protective fence must be erected at both ends of the bridge to prohibit unauthorized persons from entering onto the bridge.

B. Ballasted track structure shall be kept free of all construction and demolition debris. Geo-textiles or canvas shall be placed over the track ties and ballast to keep the ballast clean.

3.9 EQUIPMENT CONDITION

A. All equipment to be used in the vicinity of operating tracks shall be in "certified" first-class condition so as to prevent failures that might cause delay to trains or damage to Railroad's property. No equipment shall be placed or put into operation near or adjacent to operating tracks without first obtaining permission from the Chief Engineer's representative. **Under no**

circumstances shall any equipment or materials be placed or stored within twenty-five (25) feet from the centerline of an outside track, except as approved by the Site Specific Safety Work Plan. To insure compliance with this requirement, Permittee and/or Contractors **must establish a twenty-five (25) foot foul line prior to the start of work** by either driving stakes, taping off or erecting a temporary fence, or providing an alternate method as approved by the Chief Engineer's representative. Permittee and/or Contractors will be issued warning stickers which must be placed in the operating cabs of all equipment as a constant reminder of the twenty-five (25) foot clearance envelope.

3.10 STORAGE OF MATERIALS AND EQUIPMENT

A. No material or equipment shall be stored on Railroad's property without first having obtained permission from the Chief Engineer. Any such storage will be on the condition that Railroad will not be liable for loss of or damage to such materials or equipment from any cause.

B. If permission is granted for the storage of compressed gas cylinders on Railroad property, they shall be stored a minimum of 25 feet from the nearest track in an approved lockable enclosure. The enclosure shall be locked when the Permittee and/or Contractor is not on the project site.

3.11 CONDITION OF RAILROAD'S PROPERTY

A. Permittee and/or Contractors shall keep Railroad's property clear of all refuse and debris from its operations. Upon completion of the work, Permittee and/or Contractors shall remove from Railroad's property all machinery, equipment, surplus materials, falsework, rubbish, temporary structures, and other property of the Permittee and/or Contractors and shall leave Railroad's property in a condition satisfactory to the Chief Engineer.

3.12 SAFETY TRAINING

A. All individuals, including representatives and employees of Permittee and/or Contractor, before entering onto Railroad's property and before coming within twenty-five (25) feet of the centerline of the track or energized wire must first attend Railroad's Contractor Orientation Computer Based Training Class. The Contractor Orientation Class will be provided electronically at **www.amtrakcontractor.com**. Upon successful completion of the course and test, the individual taking the course will receive a temporary certificate without a photo that is valid for three weeks. The individual must upload a photo of himself/herself that will be embedded in the permanent ID card. The photo ID will be mailed to the individual's home address and must be worn/displayed while on Railroad property. Training is valid for one calendar year. All costs of complying with Railroad's safety training shall be at the sole expense of Permittee and/or Contractor. The Permittee and/or Contractor shall appoint a qualified person as its Safety Representative. The Safety Representative shall continuously ensure that all individuals comply with Railroad's safety requirements. All safety training records must be maintained with the Permittee's and/or Contractor's site specific work plan.

3.13 NO CHARGES TO RAILROAD

A. It is expressly understood that neither these Specifications, nor any document to which they are attached, include any work for which Railroad is to be billed by Permittee and/or Contractors, unless Railroad gives a written request that such work be performed at Railroad's expense.

END OF SECTION 01141A

INSURANCE REQUIREMENTS
NATIONAL RAILROAD PASSENGER CORPORATION (AMTRAK)
WASHINGTON TERMINAL COMPANY (WTC)
Revised as of February 27, 2018

DEFINITIONS

In these Insurance Requirements, "Railroad" or "Amtrak" shall mean National Railroad Passenger Corporation and, as appropriate, its subsidiary, Washington Terminal Company ("WTC"). "Contractor" shall mean the party identified as "Permittee" in the Temporary Permit to Enter Upon Property or the party with whom Amtrak has contracted in another agreement (e.g., Preliminary Engineering Agreement, Design and/or Construction Phase Agreement, Force Account Agreement, License Agreement), as well as its officers, employees, agents, servants, contractors, subcontractors, or any other person acting for or by permission of Contractor. "Operations" shall mean activities of or work performed by Contractor. "Agreement" shall mean the Temporary Permit to Enter Upon Property or other such agreement, as applicable.

INSURANCE

Contractor shall procure and maintain, at its sole cost, the types of insurance specified below:

1. **Workers' Compensation Insurance** complying with the requirements of the statutes of the jurisdiction(s) in which the Operations will be performed, covering all employees of Contractor. Employer's Liability coverage shall have the following minimum limits of coverage:

$1,000,000	Each Accident
$1,000,000	Disease Policy Limit
$1,000,000	Disease Each Employee

   In the event the Operations are to be performed on, over, or adjacent to navigable waterways, a U.S. Longshoremen and Harbor Workers' Compensation Act Endorsement and an Outer Continental Lands Act Endorsement are required.

2. **Commercial General Liability (CGL) Insurance** covering liability of Contractor with respect to all operations to be performed and all obligations assumed by Contractor under the terms of the Agreement. Products-completed operations, independent contractors and contractual liability coverages are to be included, with the contractual exclusion related to construction/demolition activity within fifty (50) feet of the railroad deleted and with no exclusions for Explosion/Collapse/ Underground (X-C-U). Coverage shall include bodily injury (including disease or death), personal injury and property damage (including loss of use) liability.

   This policy shall have the following minimum limits of coverage:

$2,000,000	Each Occurrence
$2,000,000	Annual Policy Aggregate
$2,000,000	Products and Completed Operations

   In addition, the following shall apply:

A. The policy shall name National Railroad Passenger Corporation (and, as appropriate, WTC) and all commuter agencies and railroads that operate over the property or tracks at issue as additional insureds with respect to the operations to be performed.
B. The policy shall include an ISO endorsement Form CG 24 17 10 01 or its equivalent providing contractual liability coverage for railroads listed as additional insureds.
C. Coverage for such additional insureds shall be primary and non-contributory with respect to any other insurance the additional insureds may carry.
D. Such coverage may be provided by a combination of a primary CGL policy and a following form excess or umbrella liability policy.

3. **Automobile Liability Insurance** covering the liability of Contractor arising out of the use of any vehicles which bear, or are required to bear, license plates according to the laws of the jurisdiction in which they are to be operated, and which are not covered under Contractor's CGL insurance. The policy shall have the following minimum limits of coverage:

$1,000,000	Each Occurrence, Combined Single Limit

In addition, the following shall apply:

A. The policy shall name National Railroad Passenger Corporation (and, as appropriate, WTC) and all commuter agencies and railroads that operate over the property or tracks at issue as additional insureds with respect to the operations to be performed.
B. Coverage shall include bodily injury (including disease or death), personal injury and property damage (including loss of use) liability and cover damages resulted from loading and unloading activities.
C. In the event Contractor will be transporting and/or disposing of any hazardous material or waste off of the jobsite, a MCS-90 Endorsement is to be added to this policy and the limits of liability are to be increased to **$5** million each occurrence.

4. **Railroad Protective (RRP) Liability Insurance** covering the Operations performed by Contractor within fifty (50) feet vertically or horizontally of railroad tracks. The policy shall be written on a current ISO Occurrence Form (claims-made forms are unacceptable) in the name of National Railroad Passenger Corporation (and, as appropriate WTC) and all commuter agencies and railroads that operate over the property or tracks at issue). The policy shall have the following minimum limits of coverage:

$2,000,000	Each Occurrence
$6,000,000	Policy Aggregate

In addition, the following shall apply:

A. The policy shall have coverage for losses arising out of injury to or death of all persons, and for physical loss or damage to or destruction of property, including the loss of use thereof.
B. Policy Endorsement CG 28 31 - Pollution Exclusion Amendment is required to be endorsed onto the policy.
C. "Physical Damage to Property" as defined in the policy is to be deleted and replaced by the following endorsement:

"It is agreed that ‘Physical Damage to Property’ means direct and accidental loss of or damage to all property owned by any named insured and all property in any named insured’s

care, custody and control."

5. **All Risk Property Insurance** covering damage to or loss of all personal property of Contractor used during Operations including, but not limited to, tools, equipment, construction trailers and their contents and temporary scaffolding at the project site, whether owned, leased, rented or borrowed for the full replacement cost value. Such insurance policies shall include a waiver of subrogation and any other rights of recovery in favor of Amtrak.

6. **Builder's Risk/Installation Floater** is required if Contractor's work involves construction or renovation of a building or structure. Contractor shall provide builder's risk coverage issued for the work to cover property in the course of construction, soft costs, and delay in completion, including coverage for damage to existing property and property of others, and the loss of use thereof. In addition, Contractor shall provide installation floater coverage for personal property installed, fabricated or erected by Contractor, including material in transit or storage during the course of the work. Coverage shall be on an all-risk, full replacement value basis, including labor, materials in place, on site, in storage, off-site or in transit and include coverage for perils of Flood, Earth Movement, Wind and Terrorism. National Railroad Passenger Corporation shall be named as a loss payee, with respect to its interest in the covered property.

7. **Contractor's Pollution Liability Insurance** covering the liability of Contractor arising out of any sudden and/or non-sudden pollution or impairment of the environment, including clean-up costs and defense, which arise from the Operations of Contractor. The policy shall have the following minimum limits of coverage:

$2,000,000	Each Occurrence
$2,000,000	Annual Policy Aggregate

In addition, the following shall apply:

A. The policy shall name National Railroad Passenger Corporation (and, as appropriate, WTC) and all commuter agencies and railroads that operate over the property or tracks at issue as additional insureds.
B. The coverage shall be maintained during the term of the Operations and for at least two (2) years following completion thereof.

8. **Pollution Legal Liability Insurance** is required if any hazardous material or waste is to be transported or disposed of off of the jobsite. Contractor or its transporter, as well as the disposal site operator, shall maintain this insurance. The policy shall have the following minimum limits of coverage:

$2,000,000	Each Occurrence
$2,000,000	Annual Policy Aggregate

In addition, the following shall apply:

A. Contractor shall designate the disposal site and provide a certificate of insurance from the disposal facility to Amtrak.
B. The policy shall name National Railroad Passenger Corporation (and, as appropriate, WTC) and all commuter agencies and railroads that operate over the property or tracks at issue as additional insureds.

C. Any additional insurance coverages, permits, licenses and other forms of documentation required by the United States Department of Transportation, the Environmental Protection Agency and/or related state and local laws, rules and regulations shall be obtained by Contractor.

9. **Professional Liability Insurance** covering the liability of Contractor for any errors or omissions committed by Contractor providing professional design or engineering services in the performance of the Operations, regardless of the type of damages. The policy shall have the following minimum levels of coverage:

$2,000,000	Per Claim
$2,000,000	Annual Policy Aggregate

In addition, the following shall apply:

A. The coverage shall be maintained during the Operations and for at least three (3) years following completion thereof.
B. The policy shall have a retroactive date that coincides with or precedes any design work on the project.
C. If Contractor is not performing professional design or engineering services, Contractor may elect to satisfy this requirement through the addition of endorsement CG2279 "Incidental Professional Liability" to its CGL policy.

MISCELLANEOUS

1. **General**

A. All insurance shall be procured from insurers authorized to do business in the jurisdiction(s) where the Operations are to be performed.
B. Contractor shall require all subcontractors to carry the insurance required herein or Contractor may, at its option, provide the coverage for any or all subcontractors, provided the evidence of insurance submitted by Contractor to Amtrak so stipulates.
C. The insurance shall provide for thirty (30) days prior written notice to Amtrak in the event coverage is substantially changed, canceled or non-renewed.
D. Unless noted otherwise herein, all insurance shall remain in force until all Operations are satisfactorily completed, all Contractor personnel and equipment have been removed from Railroad property, and any work has been formally accepted.
E. Contractor may provide for the insurance coverages with such deductible or retained amount as Amtrak may approve from time to time, except, however, that Contractor shall, at its sole cost, pay for all claims and damages which fall within such deductible or retained amount on the same basis as if there were full commercial insurance in force.
F. Contractor's failure to comply with the insurance requirements set forth in these Insurance Requirements shall constitute a violation of the Agreement.

2. **Waiver of Subrogation** As to all insurance policies required herein, Contractor waives all rights of recovery, and its insurers must waive all rights of subrogation of damages against Amtrak (and, as appropriate, WTC) and their agents, officers, directors, and employees. The waiver must be stated on the certificates of insurance.

3. **Punitive Damages** Unless prohibited by law, no liability insurance policies required herein shall contain an exclusion for punitive or exemplary damages.

4. **Claims-Made Insurance** If any liability insurance specified herein shall be provided on a claims-made basis then, in addition to coverage requirements above, the following shall apply:

   A. The retroactive date shall coincide with or precede Contractor's start of Operations (including subsequent policies purchased as renewals or replacements);
   B. The policy shall allow for the reporting of circumstances or incidents that might give rise to future claims;
   C. Contractor shall maintain similar insurance under the same terms and conditions that describe each type of policy listed above (e.g., CGL, Professional Liability, Pollution Legal Liability) for at least three (3) years following completion of Operations; and
   D. If insurance is terminated for any reason, Contractor shall purchase an extended reporting provision of at least six (6) years to report claims arising from Operations.

5. **Evidence of Insurance**

   A. Contractor shall submit to Amtrak the original RRP Liability Insurance Policy and certificates of insurance evidencing the other required insurance. In addition, Contractor agrees to provide certified copies of the insurance policies for the required insurance within thirty (30) days of Amtrak's written request.
   B. Contractor shall furnish evidence of insurance as specified herein at least fifteen (15) days prior to commencing Operations. The fifteen (15) day requirement may be waived by Amtrak in situations where such waiver will benefit Amtrak, but under no circumstances will Contractor begin Operations without providing satisfactory evidence of insurance as approved by Amtrak.
   C. Prior to the cancellation, renewal, or expiration of any insurance policy specified above, Contractor shall furnish evidence of insurance replacing the cancelled or expired policies.
   D. ALL INSURANCE DOCUMENTS SHALL INCLUDE A DESCRIPTION OF THE PROJECT AND THE LOCATION ALONG THE RAILROAD RIGHT-OF-WAY (typically given by milepost designation) IN ORDER TO FACILITATE PROCESSING.
   E. Evidence of insurance coverage shall be sent to:

      Director I&C Projects
      National Railroad Passenger Corporation
      30th Street Station, Mail Box 64
      Philadelphia, PA 19104-2817

AMTRAK
Engineering
30th and Market Streets – 3 North – Box 15
Philadelphia, PA 19104

Contractor Orientation Training Request

Starting September 2019, the cost of computer based training will increase to $30.00 per person. This training can be completed at www.amtrakcontractor.com and requires participants to register on the website before accessing the course. The course is available 24 hours / 7 days per week. Participants completing this course are required to be able to ***Read, Comprehend and Demonstrate in English their understanding of the materials presented, as well as all the safety instructions, briefings and warnings.*** Before taking this course, participants will be required to provide a current photo and have the capability of uploading the photo electronically. At the end of this course, participants are required to pass a comprehensive test to receive a temporary certificate that is valid for fifteen days. A Photo ID card, which is valid for one calendar year from the date of issue, will be mailed to the participant. Each participant will be given three (3) opportunities to pass the test. If unable to pass on the 3rd attempt, the participant will be unable to retake the test for 30 days.

The safety of Amtrak's passengers and all employees working on the property (Amtrak and Contractor personnel) remains our highest priority. For your protection, Amtrak requires that your employees comply with all safety regulations ("Specifications Regarding Safety and Protection of the Railroad Traffic Property").

All contractors must notify the Amtrak Project Manager or Engineer assigned to your project before entering onto railroad property and before coming within twenty-five (25 feet) of the centerline of the track or energized wire. Amtrak's Project Manager or Engineer assigned to your project will assist you with obtaining a temporary "Permit to Enter upon Property" and will arrange for protection if needed. All permits to enter Amtrak property are obtained by contacting Permit@amtrak.com. Safety violations will result in the immediate suspension of work within the railroad's property limits.

Thank You

Amtrak Engineering

APPENDIX B
Sampling Results

eurofins | Environment Testing America

ANALYTICAL REPORT

Eurofins Pittsburgh
301 Alpha Drive
RIDC Park
Pittsburgh, PA 15238
Tel: (412)963-7058

Laboratory Job ID: 180-138845-1
Client Project/Site: City Pier, New London CT

For:
ESS Group Inc
404 Wyman Street
Suite 375
Waltham, Massachusetts 02451

Attn: Michael Phillips

Authorized for release by:
7/9/2022 10:43:51 AM

Carrie Gamber, Senior Project Manager
(412)963-2428
Carrie.Gamber@et.eurofinsus.com

This report has been electronically signed and authorized by the signatory. Electronic signature is intended to be the legally binding equivalent of a traditionally handwritten signature.

Results relate only to the items tested and the sample(s) as received by the laboratory.

PA Lab ID: 02-00416

Table of Contents

Job ID: 180-138845-1

Laboratory: Eurofins Pittsburgh

Narrative

CASE NARRATIVE

Client: ESS Group Inc

Project: City Pier, New London CT

Report Number: 180-138845-1

With the exceptions noted as flags or footnotes, standard analytical protocols were followed in the analysis of the samples and no problems were encountered or anomalies observed. In addition all laboratory quality control samples were within established control limits, with any exceptions noted below. Each sample was analyzed to achieve the lowest possible reporting limit within the constraints of the method. In some cases, due to interference or analytes present at high concentrations, samples were diluted. For diluted samples, the reporting limits are adjusted relative to the dilution required.

Calculations are performed before rounding to avoid round-off errors in calculated results.

All holding times were met and proper preservation noted for the methods performed on these samples, unless otherwise detailed in the individual sections below.

RECEIPT
The samples were received on 05/28/2022; the samples arrived in good condition, properly preserved and on ice. The temperatures of the 2 coolers at receipt time were 1.8º C and 2.3º C.

The terracores were received labeled by the client which adds weight to them: SOUTH-1 (180-138845-1), SOUTH-2 (180-138845-2), SOUTH-3 (180-138845-3), SOUTH-23 (180-138845-4), SOUTH-1 (180-138845-5), SOUTH-2 (180-138845-6), SOUTH-3 (180-138845-7) and SOUTH-23 (180-138845-8).

Two 16 ounce containers were received without an id on them. The time of 13:00 on the labels matches both of the following samples. Per the client Proctor and Grain Size were no requested for SOUTH-23. Both containers were for South 3: SOUTH-3 (180-138845-7) and SOUTH-23 (180-138845-8).

VOLATILES
The continuing calibration verification (CCV) analyzed in batch 180-400746 was outside the method criteria for the following analyte(s): Bromoform. A CCV standard at or below the reporting limit (RL) was analyzed with the affected samples and found to be acceptable. As indicated in the reference method, sample analysis may proceed; however, any detection for the affected analyte(s) is considered estimated.

SEMIVOLATILES
The following sample was diluted to bring the concentration of target analytes within the calibration range: SOUTH-1 (180-138845-1). Elevated reporting limits (RLs) are provided.

The following samples were diluted due to the nature of the sample matrix: SOUTH-2 (180-138845-2), SOUTH-3 (180-138845-3) and SOUTH-23 (180-138845-4). Elevated reporting limits (RLs) are provided.

The following samples were diluted due to the nature of the sample matrix: SOUTH-1 (180-138845-5), SOUTH-2 (180-138845-6), SOUTH-3 (180-138845-7), SOUTH-23 (180-138845-8), (180-138845-D-5-A MS) and (180-138845-D-5-B MSD). Elevated reporting limits (RLs) are provided.

CT EPH
Sample SOUTH-1 (180-138845-5) required dilution prior to analysis. The reporting limits have been adjusted accordingly.

Surrogate recovery for the following sample was outside control limits: SOUTH-3 (180-138845-7). Re-extraction and/or re-analysis was performed outside of holding time with acceptable results. Both trials are reported.

Job ID: 180-138845-1 (Continued)

Laboratory: Eurofins Pittsburgh (Continued)

C9-C36 failed the recovery criteria high for the MS of sample SOUTH-23MS (180-138845-8) in batch 410-264378. C9-C36 failed the recovery criteria low for the MSD of sample SOUTH-23MSD (180-138845-8) in batch 410-264378. C9-C36 exceeded the RPD limit. The presence of the '4' qualifier indicates analytes where the concentration in the unspiked sample exceeded four times the spiking amount.

PESTICIDES

The following sample required a 5x dilution due to the nature of the sample matrix: SOUTH-2 (180-138845-2). Because of this dilution, the surrogate spike concentration in the sample was reduced. Elevated reporting limits (RLs) are provided.

The following sample was diluted due to the nature of the sample matrix: SOUTH-1 (180-138845-1). Elevated reporting limits (RLs) are provided.

Surrogate recovery for the following sample was outside control limits: SOUTH-1 (180-138845-1). Evidence of matrix interference is present; therefore, re-extraction and/or re-analysis was not performed.

The continuing calibration verification (CCV) associated with batch 180-402980 recovered outside acceptance criteria, low biased, for Methoxychlor. A reporting limit (RL) standard was analyzed, and the target analytes are detected. Since the associated samples were non-detect for the analyte(s), the data are reported.

The continuing calibration verification (CCV) associated with batch 180-402980 recovered outside acceptance criteria, low biased, for 4,4'-DDT. A reporting limit (RL) standard was analyzed, and the target analytes are detected. Since the associated samples were non-detect for the analyte(s), the data are reported.

PCBs

The following samples were diluted due to the nature of the sample matrix: SOUTH-1 (180-138845-1), SOUTH-2 (180-138845-2), SOUTH-3 (180-138845-3) and SOUTH-23 (180-138845-4). The sample extracts were viscous. Elevated reporting limits (RLs) are provided.

Surrogate recovery for the following sample was outside control limits: SOUTH-1 (180-138845-1). Evidence of matrix interference is present; therefore, re-extraction and/or re-analysis was not performed.

HERBICIDES

Surrogate recovery for the following samples were outside control limits: SOUTH-1 (180-138845-1) and SOUTH-2 (180-138845-2). Evidence of matrix interference is present; therefore, re-extraction and/or re-analysis was not performed.

2,4-Dichlorophenylacetic acid failed the surrogate recovery criteria high for the following samples, confirming sample matrix: SOUTH-1MS (180-138845-1MS) and SOUTH-1MSD (180-138845-1MSD).

The continuing calibration verification (CCV) associated with batch 401659 recovered above the upper control limit for all analytes of interest. The samples associated with this CCV were non-detects for the affected analytes; therefore, the data have been reported.

The continuing calibration verification (CCV) associated with batch 401659 recovered outside acceptance criteria, low biased, for all analytes of interest on the front column. A reporting limit (RL) standard was analyzed, and the target analytes are detected. Since the associated samples were non-detect for the analyte(s), the data are reported.

8318A HPLC

The following samples were received with less than 2 days remaining on the holding time. As such, the laboratory had insufficient time remaining to perform the analysis within holding time: SOUTH-1 (180-138845-5), SOUTH-2 (180-138845-6), SOUTH-3 (180-138845-7), SOUTH-23 (180-138845-8), (180-138845-A-5-A MS) and (180-138845-A-5-B MSD). The data was reported and qualified.

9056A IC

All samples required dilution prior to analysis. The reporting limits have been adjusted accordingly.

DIOXINS

No analytical or quality issues were noted, other than those described above or in the Definitions/Glossary page.

Job ID: 180-138845-1 (Continued)

Laboratory: Eurofins Pittsburgh (Continued)

METALS
The continuing calibration blank (CCB) associated with batch 180-403449 recovered above the upper control limit for Zinc. The samples associated with this CCB were 10X the CCB concentration for the affected analytes; therefore, the data have been reported. The associated samples are impacted: SOUTH-1 (180-138845-1), SOUTH-2 (180-138845-2), SOUTH-3 (180-138845-3), SOUTH-23 (180-138845-4) and (CCB 180-403449/107).

GENERAL CHEMSITRY
The following samples were assumed to contain Sulfide due to sample matrix when digesting for Cyanide: SOUTH-1 (180-138845-1), SOUTH-2 (180-138845-2), SOUTH-3 (180-138845-3), SOUTH-23 (180-138845-4), (180-138845-A-1 MS) and (180-138845-A-1 MSD). The sulfide was treated and removed prior to distillation with 200 uL of bismuth nitrate solution.

Cyanide, Total failed the recovery criteria low for the MS of sample SOUTH-1MS (180-138845-1) in batch 180-401078.

The reporting limit for Lloyd Kahn TOC analysis is a nominal value and does not reflect adjustments in sample mass processed on an individual basis.

GRAIN SIZE
No analytical or quality issues were noted, other than those described above or in the Definitions/Glossary page.

SUBCONTRACT WORK
Method Standard Proctor ASTM D698 (GeoTesting Express, Acton, MA): This method was subcontracted to GeoTesting Express Inc.. The subcontract laboratory certification is different from that of the facility issuing the final report.

Qualifiers

GC/MS VOA

Qualifier	Qualifier Description
J	Result is less than the RL but greater than or equal to the MDL and the concentration is an approximate value.

GC/MS Semi VOA

Qualifier	Qualifier Description
J	Result is less than the RL but greater than or equal to the MDL and the concentration is an approximate value.

GC Semi VOA

Qualifier	Qualifier Description
4	MS, MSD: The analyte present in the original sample is greater than 4 times the matrix spike concentration; therefore, control limits are not applicable.
F1	MS and/or MSD recovery exceeds control limits.
F2	MS/MSD RPD exceeds control limits
H	Sample was prepped or analyzed beyond the specified holding time
J	Result is less than the RL but greater than or equal to the MDL and the concentration is an approximate value.
p	The %RPD between the primary and confirmation column/detector is >40%. The lower value has been reported.
S1-	Surrogate recovery exceeds control limits, low biased.
S1+	Surrogate recovery exceeds control limits, high biased.

HPLC/IC

Qualifier	Qualifier Description
H	Sample was prepped or analyzed beyond the specified holding time

Dioxin

Qualifier	Qualifier Description
I	Value is EMPC (estimated maximum possible concentration).
J	Result is less than the RL but greater than or equal to the MDL and the concentration is an approximate value.

Metals

Qualifier	Qualifier Description
^2	Calibration Blank (ICB and/or CCB) is outside acceptance limits.
J	Result is less than the RL but greater than or equal to the MDL and the concentration is an approximate value.

General Chemistry

Qualifier	Qualifier Description
F1	MS and/or MSD recovery exceeds control limits.

Glossary

Abbreviation	These commonly used abbreviations may or may not be present in this report.
¤	Listed under the "D" column to designate that the result is reported on a dry weight basis
%R	Percent Recovery
CFL	Contains Free Liquid
CFU	Colony Forming Unit
CNF	Contains No Free Liquid
DER	Duplicate Error Ratio (normalized absolute difference)
Dil Fac	Dilution Factor
DL	Detection Limit (DoD/DOE)
DL, RA, RE, IN	Indicates a Dilution, Re-analysis, Re-extraction, or additional Initial metals/anion analysis of the sample
DLC	Decision Level Concentration (Radiochemistry)
EDL	Estimated Detection Limit (Dioxin)
LOD	Limit of Detection (DoD/DOE)
LOQ	Limit of Quantitation (DoD/DOE)
MCL	EPA recommended "Maximum Contaminant Level"
MDA	Minimum Detectable Activity (Radiochemistry)
MDC	Minimum Detectable Concentration (Radiochemistry)
MDL	Method Detection Limit
ML	Minimum Level (Dioxin)
MPN	Most Probable Number

Glossary (Continued)

Abbreviation	These commonly used abbreviations may or may not be present in this report.
MQL	Method Quantitation Limit
NC	Not Calculated
ND	Not Detected at the reporting limit (or MDL or EDL if shown)
NEG	Negative / Absent
POS	Positive / Present
PQL	Practical Quantitation Limit
PRES	Presumptive
QC	Quality Control
RER	Relative Error Ratio (Radiochemistry)
RL	Reporting Limit or Requested Limit (Radiochemistry)
RPD	Relative Percent Difference, a measure of the relative difference between two points
TEF	Toxicity Equivalent Factor (Dioxin)
TEQ	Toxicity Equivalent Quotient (Dioxin)
TNTC	Too Numerous To Count

Accreditation/Certification Summary

Client: ESS Group Inc
Project/Site: City Pier, New London CT

Job ID: 180-138845-1

Laboratory: Eurofins Pittsburgh

All accreditations/certifications held by this laboratory are listed. Not all accreditations/certifications are applicable to this report.

Authority	Program	Identification Number	Expiration Date
Arkansas DEQ	State	19-033-0	06-27-22 *
California	State	2891	04-30-22 *
Connecticut	State	PH-0688	09-30-22
Florida	NELAP	E871008	06-30-22
Georgia	State	PA 02-00416	04-30-23
Illinois	NELAP	004375	06-30-23
Kansas	NELAP	E-10350	03-31-23
Kentucky (UST)	State	162013	04-30-22 *
Kentucky (WW)	State	KY98043	12-31-22
Louisiana	NELAP	04041	06-30-22
Maine	State	PA00164	03-06-24
Minnesota	NELAP	042-999-482	12-31-22
Nevada	State	PA00164	08-31-22
New Hampshire	NELAP	2030	04-04-23
New Jersey	NELAP	PA005	06-30-23
New York	NELAP	11182	04-01-23
North Carolina (WW/SW)	State	434	12-31-22
North Dakota	State	R-227	04-30-22 *
Oregon	NELAP	PA-2151	02-07-23
Pennsylvania	NELAP	02-00416	04-30-23
Rhode Island	State	LAO00362	12-31-21 *
South Carolina	State	89014	06-30-22
Texas	NELAP	T104704528	03-31-23
USDA	US Federal Programs	P330-16-00211	06-26-22 *
Utah	NELAP	PA001462019-8	05-31-22 *
Virginia	NELAP	10043	09-14-22
West Virginia DEP	State	142	01-31-23
Wisconsin	State	998027800	08-31-22

Laboratory: Eurofins Cedar Falls

All accreditations/certifications held by this laboratory are listed. Not all accreditations/certifications are applicable to this report.

Authority	Program	Identification Number	Expiration Date
Colorado	Petroleum Storage Tank Program	IA100001 (OR)	09-29-22
Georgia	State	IA100001 (OR)	09-29-22
Illinois	NELAP	200024	06-20-22
Iowa	State	007	12-01-21 *
Kansas	NELAP	E-10341	01-31-23
Minnesota	NELAP	019-999-319	12-31-22
Minnesota (Petrofund)	State	3349	01-18-24
North Dakota	State	R-186	09-29-22
Oregon	NELAP	IA100001	09-29-22

Laboratory: Eurofins Lancaster Laboratories Environment Testing, LLC

All accreditations/certifications held by this laboratory are listed. Not all accreditations/certifications are applicable to this report.

Authority	Program	Identification Number	Expiration Date
A2LA	Dept. of Defense ELAP	1.01	11-30-22
A2LA	ISO/IEC 17025	0001.01	11-30-22
Alaska	State	PA00009	06-30-22
Alaska (UST)	State	17-027	02-28-23

* Accreditation/Certification renewal pending - accreditation/certification considered valid.

Laboratory: Eurofins Lancaster Laboratories Environment Testing, LLC (Continued)

All accreditations/certifications held by this laboratory are listed. Not all accreditations/certifications are applicable to this report.

Authority	Program	Identification Number	Expiration Date
Arizona	State	AZ0780	03-12-23
Arkansas DEQ	State	88-0660	08-10-22
California	State	2792	11-30-22
Colorado	State	PA00009	06-30-22
Connecticut	State	PH-0746	06-30-23
DE Haz. Subst. Cleanup Act (HSCA)	State	019-006 (PA cert)	01-31-23
Delaware (DW)	State	N/A	01-31-23
Florida	NELAP	E87997	06-30-22
Georgia (DW)	State	C048	01-31-23
Hawaii	State	N/A	01-31-23
Illinois	NELAP	200027	01-31-23
Iowa	State	361	03-02-22 *
Kansas	NELAP	E-10151	10-31-22
Kentucky (DW)	State	KY90088	12-31-22
Kentucky (UST)	State	1.01	11-30-22
Kentucky (WW)	State	KY90088	01-01-23
Louisiana	NELAP	02055	06-30-22
Maine	State	2019012	03-12-23
Maryland	State	100	06-30-23
Massachusetts	State	M-PA009	06-30-22
Michigan	State	9930	01-31-23
Minnesota	NELAP	042-999-487	12-31-22
Missouri	State	450	01-31-25
Montana (DW)	State	0098	01-01-23
Montana (UST)	State	<cert No.>	02-01-23
Nebraska	State	NE-OS-32-17	01-31-23
New Hampshire	NELAP	2730	01-10-23
New Jersey	NELAP	PA011	06-30-22
New York	NELAP	10670	04-01-23
North Carolina (DW)	State	42705	07-31-22
North Carolina (WW/SW)	State	521	12-31-22
North Dakota	State	R-205	01-31-23
Oklahoma	NELAP	R-205	08-31-22
Oregon	NELAP	PA200001	09-11-22
PALA	Canada	1978	09-16-24
Pennsylvania	NELAP	36-00037	01-31-23
Rhode Island	State	LAO00338	12-30-22
South Carolina	State	89002	01-31-23
Tennessee	State	02838	01-31-23
Texas	NELAP	T104704194-21-40	08-31-22
USDA	US Federal Programs	P330-19-00197	07-03-22
Vermont	State	VT - 36037	10-28-22
Virginia	NELAP	460182	06-15-23
Washington	State	C457	04-11-23
West Virginia (DW)	State	9906 C	12-31-22
West Virginia DEP	State	055	07-31-22
Wyoming	State	8TMS-L	01-31-23
Wyoming (UST)	A2LA	1.01	11-30-22

* Accreditation/Certification renewal pending - accreditation/certification considered valid.

Sample Summary

Client: ESS Group Inc
Project/Site: City Pier, New London CT

Job ID: 180-138845-1

Lab Sample ID	Client Sample ID	Matrix	Collected	Received
180-138845-1	SOUTH-1	Sediment	05/26/22 11:00	05/28/22 09:00
180-138845-2	SOUTH-2	Sediment	05/26/22 15:30	05/28/22 09:00
180-138845-3	SOUTH-3	Sediment	05/26/22 13:00	05/28/22 09:00
180-138845-4	SOUTH-23	Sediment	05/26/22 13:00	05/28/22 09:00
180-138845-5	SOUTH-1	Solid	05/26/22 11:00	05/28/22 09:00
180-138845-6	SOUTH-2	Solid	05/26/22 15:30	05/28/22 09:00
180-138845-7	SOUTH-3	Solid	05/26/22 13:00	05/28/22 09:00
180-138845-8	SOUTH-23	Solid	05/26/22 13:00	05/28/22 09:00

Method Summary

Client: ESS Group Inc
Project/Site: City Pier, New London CT

Job ID: 180-138845-1

Method	Method Description	Protocol	Laboratory
EPA 8260D	Volatile Organic Compounds by GC/MS	SW846	TAL PIT
8270E	Semivolatile Organic Compounds (GC/MS)	SW846	TAL CF
EPA 8270E LL	Semivolatile Organic Compounds (GC/MS)	SW846	TAL PIT
CT ETPH	Connecticut - Extractable Total petroleum Hydrocarbons (GC)	STATE	ELLE
EPA 8081B LL	Organochlorine Pesticides (GC)	SW846	TAL PIT
EPA 8082A	Polychlorinated Biphenyls (PCBs) (GC)	SW846	TAL PIT
EPA 8151A	Herbicides (GC)	SW846	TAL PIT
8318A	The Determination of Carbamate in Soils and Water by HPLC	SW846	ELLE
EPA 9056A	Anions, Ion Chromatography	SW846	TAL PIT
1613B	Dioxins and Furans (HRGC/HRMS)	EPA	ELLE
EPA 6020B	Metals (ICP/MS)	SW846	TAL PIT
EPA 7471B	Mercury (CVAA)	SW846	TAL PIT
2540G	SM 2540G	SM22	TAL PIT
7196A	Chromium, Trivalent (Colorimetric)	SW846	TAL PIT
EPA 7196A	Chromium, Hexavalent	SW846	TAL PIT
EPA 9014	Cyanide	SW846	TAL PIT
EPA-Lloyd Kahn	Organic Carbon, Total (TOC)	EPA	TAL PIT
Moisture	Percent Moisture	EPA	ELLE
D422	Grain Size	ASTM	ELLE
Subcontract	Standard Proctor ASTM D698 (GeoTesting Express, Acton, MA)	None	
3010A	Preparation, Total Metals	SW846	TAL PIT
3050B	Preparation, Metals	SW846	TAL PIT
3060A	Alkaline Digestion (Chromium, Hexavalent)	SW846	TAL PIT
3541	Automated Soxhlet Extraction (Low Level)	SW846	TAL PIT
3546	Microwave Extraction	SW846	TAL CF
3550C	Ultrasonic Extraction	SW846	ELLE
3640A	Gel-Permeation Cleanup	SW846	TAL PIT
3660B	Sulfur Cleanup	SW846	TAL PIT
3665A	Sulfuric Acid/Permanganate Cleanup	SW846	TAL PIT
5035	Closed System Purge and Trap	SW846	TAL PIT
7471B	Preparation, Mercury	SW846	TAL PIT
8151A	Extraction (Herbicides)	SW846	TAL PIT
8318A_S_Prep	Preparation, Carbamate (HPLC)	SW846	ELLE
9010C	Cyanide, Distillation	SW846	TAL PIT
DI Leach	Deionized Water Leaching Procedure	ASTM	TAL PIT
EPA 1311	TCLP Extraction	SW846	TAL PIT
HRMS-Soxtherm	Soxtherm Extraction	EPA	ELLE

Protocol References:

ASTM = ASTM International
EPA = US Environmental Protection Agency
None = None
SM22 = Standard Methods For The Examination Of Water And Wastewater, 22nd Edition
STATE = State of Connecticut Department of Public Health
SW846 = "Test Methods For Evaluating Solid Waste, Physical/Chemical Methods", Third Edition, November 1986 And Its Updates.

Laboratory References:

= Acton, MA, Attn: Accounts Payable, 125 Nagog Park, Acton, MA 01719
ELLE = Eurofins Lancaster Laboratories Environment Testing, LLC, 2425 New Holland Pike, Lancaster, PA 17601, TEL (717)656-2300
TAL CF = Eurofins Cedar Falls, 3019 Venture Way, Cedar Falls, IA 50613, TEL (319)277-2401
TAL PIT = Eurofins Pittsburgh, 301 Alpha Drive, RIDC Park, Pittsburgh, PA 15238, TEL (412)963-7058

Lab Chronicle

Client: ESS Group Inc
Project/Site: City Pier, New London CT

Job ID: 180-138845-1

Client Sample ID: SOUTH-1

Date Collected: 05/26/22 11:00
Date Received: 05/28/22 09:00

Lab Sample ID: 180-138845-1

Matrix: Sediment

Prep Type	Batch Type	Batch Method	Run	Dil Factor	Initial Amount	Final Amount	Batch Number	Prepared or Analyzed	Analyst	Lab
TCLP	Leach	EPA 1311			101.56 g	2000 mL	402348	06/17/22 17:00	MJC	TAL PIT
TCLP	Prep	3010A			5 mL	50 mL	402673	06/21/22 08:42	EMR	TAL PIT
TCLP	Analysis	EPA 6020B		1			403145	06/23/22 14:38	RSK	TAL PIT
	Instrument ID:	A								
Total/NA	Analysis	2540G		1			400721	06/02/22 16:56	ELS	TAL PIT
	Instrument ID:	NOEQUIP								
Total/NA	Analysis	7196A		1			403531	06/28/22 15:29	RSR	TAL PIT
	Instrument ID:	NOEQUIP								
Total/NA	Analysis	D422		1			269882	06/23/22 16:27	UYB0	ELLE
	Instrument ID:	9458								

Client Sample ID: SOUTH-1

Date Collected: 05/26/22 11:00
Date Received: 05/28/22 09:00

Lab Sample ID: 180-138845-1

Matrix: Sediment
Percent Solids: 38.7

Prep Type	Batch Type	Batch Method	Run	Dil Factor	Initial Amount	Final Amount	Batch Number	Prepared or Analyzed	Analyst	Lab
Total/NA	Prep	5035			4.9662 g	5 mL	400754	06/03/22 05:15	KLG	TAL PIT
Total/NA	Analysis	EPA 8260D		1	5 mL	5 mL	400746	06/03/22 12:26	KLG	TAL PIT
	Instrument ID:	CHHP3								
Total/NA	Prep	3541			30.4 g	0.5 mL	401048	06/06/22 22:33	VJC	TAL PIT
Total/NA	Analysis	EPA 8270E LL		10	1 mL	1 mL	401286	06/08/22 20:09	VVP	TAL PIT
	Instrument ID:	CHMSD7								
Total/NA	Prep	3541			30.3 g	10.0 mL	400999	06/06/22 11:12	VJC	TAL PIT
Total/NA	Cleanup	3640A			5.0 mL	0.5 mL	401463	06/09/22 15:02	VJC	TAL PIT
Total/NA	Analysis	EPA 8081B LL		5			403330	06/27/22 11:47	APD	TAL PIT
	Instrument ID:	CHGC15								
Total/NA	Prep	3541			30.1 g	1.0 mL	400877	06/03/22 17:18	VJC	TAL PIT
Total/NA	Cleanup	3665A			2 mL	2 mL	400955	06/06/22 04:15	JMO	TAL PIT
Total/NA	Cleanup	3660B			2 mL	2 mL	400956	06/06/22 04:16	JMO	TAL PIT
Total/NA	Analysis	EPA 8082A		10	1 mL	1.0 mL	401661	06/12/22 05:16	JMO	TAL PIT
	Instrument ID:	CHGC8								
Total/NA	Prep	8151A			10.0 g	40.0 mL	401378	06/09/22 03:45	CBY	TAL PIT
Total/NA	Analysis	EPA 8151A		1			401659	06/11/22 14:17	JMO	TAL PIT
	Instrument ID:	CGC1								
Soluble	Leach	DI Leach			10.05 g	100 mL	401417	06/09/22 11:30	MTW	TAL PIT
Soluble	Analysis	EPA 9056A		2.5			401559	06/11/22 09:05	LWM	TAL PIT
	Instrument ID:	CHICS2100B								
Total/NA	Prep	3050B			2.01 g	100 mL	400971	06/06/22 09:19	KWP	TAL PIT
Total/NA	Analysis	EPA 6020B		1			403244	06/25/22 03:17	RSK	TAL PIT
	Instrument ID:	DORY								
Total/NA	Prep	3050B			2.01 g	100 mL	400971	06/06/22 09:19	KWP	TAL PIT
Total/NA	Analysis	EPA 6020B		1			403449	06/25/22 18:25	RSK	TAL PIT
	Instrument ID:	NEMO								
Total/NA	Prep	7471B			1.23 g	100 mL	401486	06/10/22 08:50	RJR	TAL PIT
Total/NA	Analysis	EPA 7471B		1			401629	06/10/22 13:47	RJR	TAL PIT
	Instrument ID:	HGZ								

Lab Chronicle

Client: ESS Group Inc
Project/Site: City Pier, New London CT

Job ID: 180-138845-1

Client Sample ID: SOUTH-1

Date Collected: 05/26/22 11:00
Date Received: 05/28/22 09:00

Lab Sample ID: 180-138845-1

Matrix: Sediment
Percent Solids: 38.7

Prep Type	Batch Type	Batch Method	Run	Dil Factor	Initial Amount	Final Amount	Batch Number	Prepared or Analyzed	Analyst	Lab
Total/NA	Prep	3060A			2.54 g	100 mL	400835	06/03/22 13:09	JCR	TAL PIT
Total/NA	Analysis	EPA 7196A		1	25 mL	25 mL	401149	06/07/22 13:41	PMH	TAL PIT
	Instrument ID:	GEN10S								
Total/NA	Prep	9010C			0.53 g	10 mL	401006	06/06/22 15:15	CMR	TAL PIT
Total/NA	Analysis	EPA 9014		1			401078	06/06/22 18:27	CMR	TAL PIT
	Instrument ID:	SEAL1								
Total/NA	Analysis	EPA-Lloyd Kahn		1			401218	06/07/22 13:41	DLF	TAL PIT
	Instrument ID:	FLASHEA								

Client Sample ID: SOUTH-2

Date Collected: 05/26/22 15:30
Date Received: 05/28/22 09:00

Lab Sample ID: 180-138845-2

Matrix: Sediment

Prep Type	Batch Type	Batch Method	Run	Dil Factor	Initial Amount	Final Amount	Batch Number	Prepared or Analyzed	Analyst	Lab
TCLP	Leach	EPA 1311			102.32 g	2000 mL	402348	06/17/22 17:00	MJC	TAL PIT
TCLP	Prep	3010A			5 mL	50 mL	402673	06/21/22 08:42	EMR	TAL PIT
TCLP	Analysis	EPA 6020B		1			403145	06/23/22 14:41	RSK	TAL PIT
	Instrument ID:	A								
Total/NA	Analysis	2540G		1			400721	06/02/22 16:56	ELS	TAL PIT
	Instrument ID:	NOEQUIP								
Total/NA	Analysis	7196A		1			403531	06/28/22 15:29	RSR	TAL PIT
	Instrument ID:	NOEQUIP								
Total/NA	Analysis	D422		1			269882	06/23/22 16:29	UYB0	ELLE
	Instrument ID:	9458								

Client Sample ID: SOUTH-2

Date Collected: 05/26/22 15:30
Date Received: 05/28/22 09:00

Lab Sample ID: 180-138845-2

Matrix: Sediment
Percent Solids: 46.5

Prep Type	Batch Type	Batch Method	Run	Dil Factor	Initial Amount	Final Amount	Batch Number	Prepared or Analyzed	Analyst	Lab
Total/NA	Prep	5035			5.0201 g	5 mL	400754	06/03/22 05:15	KLG	TAL PIT
Total/NA	Analysis	EPA 8260D		1	5 mL	5 mL	400746	06/03/22 12:49	KLG	TAL PIT
	Instrument ID:	CHHP3								
Total/NA	Prep	3541			30.4 g	0.5 mL	401048	06/06/22 22:33	VJC	TAL PIT
Total/NA	Analysis	EPA 8270E LL		5	1 mL	1 mL	401286	06/08/22 20:31	VVP	TAL PIT
	Instrument ID:	CHMSD7								
Total/NA	Prep	3541			30.2 g	10.0 mL	400999	06/06/22 11:12	VJC	TAL PIT
Total/NA	Cleanup	3640A			5.0 mL	0.5 mL	401463	06/09/22 15:02	VJC	TAL PIT
Total/NA	Analysis	EPA 8081B LL		5			402980	06/23/22 22:04	APD	TAL PIT
	Instrument ID:	CHGC15								
Total/NA	Prep	3541			30.5 g	1.0 mL	400877	06/03/22 17:18	VJC	TAL PIT
Total/NA	Cleanup	3665A			2 mL	2 mL	400955	06/06/22 04:15	JMO	TAL PIT
Total/NA	Cleanup	3660B			2 mL	2 mL	400956	06/06/22 04:16	JMO	TAL PIT
Total/NA	Analysis	EPA 8082A		10	1 mL	1.0 mL	401661	06/12/22 05:35	JMO	TAL PIT
	Instrument ID:	CHGC8								

Lab Chronicle

Client: ESS Group Inc
Project/Site: City Pier, New London CT

Job ID: 180-138845-1

Client Sample ID: SOUTH-2

Date Collected: 05/26/22 15:30
Date Received: 05/28/22 09:00

Lab Sample ID: 180-138845-2

Matrix: Sediment
Percent Solids: 46.5

Prep Type	Batch Type	Batch Method	Run	Dil Factor	Initial Amount	Final Amount	Batch Number	Prepared or Analyzed	Analyst	Lab
Total/NA	Prep	8151A			10.0 g	40.0 mL	401378	06/09/22 03:45	CBY	TAL PIT
Total/NA	Analysis	EPA 8151A		1			401659	06/11/22 15:55	JMO	TAL PIT
	Instrument ID:	CGC1								
Soluble	Leach	DI Leach			10.04 g	100 mL	401417	06/09/22 11:30	MTW	TAL PIT
Soluble	Analysis	EPA 9056A		2.5			401559	06/11/22 09:35	LWM	TAL PIT
	Instrument ID:	CHICS2100B								
Total/NA	Prep	3050B			2.05 g	100 mL	400971	06/06/22 09:19	KWP	TAL PIT
Total/NA	Analysis	EPA 6020B		1			403244	06/25/22 03:28	RSK	TAL PIT
	Instrument ID:	DORY								
Total/NA	Prep	3050B			2.05 g	100 mL	400971	06/06/22 09:19	KWP	TAL PIT
Total/NA	Analysis	EPA 6020B		1			403449	06/25/22 18:27	RSK	TAL PIT
	Instrument ID:	NEMO								
Total/NA	Prep	7471B			1.40 g	100 mL	401486	06/10/22 08:50	RJR	TAL PIT
Total/NA	Analysis	EPA 7471B		1			401629	06/10/22 13:48	RJR	TAL PIT
	Instrument ID:	HGZ								
Total/NA	Prep	3060A			2.49 g	100 mL	400835	06/03/22 13:09	JCR	TAL PIT
Total/NA	Analysis	EPA 7196A		1	25 mL	25 mL	401149	06/07/22 13:41	PMH	TAL PIT
	Instrument ID:	GEN10S								
Total/NA	Prep	9010C			0.54 g	10 mL	401006	06/06/22 15:15	CMR	TAL PIT
Total/NA	Analysis	EPA 9014		1			401078	06/06/22 18:33	CMR	TAL PIT
	Instrument ID:	SEAL1								
Total/NA	Analysis	EPA-Lloyd Kahn		1			401218	06/07/22 13:58	DLF	TAL PIT
	Instrument ID:	FLASHEA								

Client Sample ID: SOUTH-3

Date Collected: 05/26/22 13:00
Date Received: 05/28/22 09:00

Lab Sample ID: 180-138845-3

Matrix: Sediment

Prep Type	Batch Type	Batch Method	Run	Dil Factor	Initial Amount	Final Amount	Batch Number	Prepared or Analyzed	Analyst	Lab
TCLP	Leach	EPA 1311			102.50 g	2000 mL	402348	06/17/22 17:00	MJC	TAL PIT
TCLP	Prep	3010A			5 mL	50 mL	402673	06/21/22 08:42	EMR	TAL PIT
TCLP	Analysis	EPA 6020B		1			403145	06/23/22 14:45	RSK	TAL PIT
	Instrument ID:	A								
Total/NA	Analysis	2540G		1			400721	06/02/22 16:56	ELS	TAL PIT
	Instrument ID:	NOEQUIP								
Total/NA	Analysis	7196A		1			403531	06/28/22 15:29	RSR	TAL PIT
	Instrument ID:	NOEQUIP								
Total/NA	Analysis	D422		1			269882	06/23/22 16:31	UYB0	ELLE
	Instrument ID:	9458								

Lab Chronicle

Client: ESS Group Inc
Project/Site: City Pier, New London CT

Job ID: 180-138845-1

Client Sample ID: SOUTH-3

Date Collected: 05/26/22 13:00
Date Received: 05/28/22 09:00

Lab Sample ID: 180-138845-3

Matrix: Sediment
Percent Solids: 50.6

Prep Type	Batch Type	Batch Method	Run	Dil Factor	Initial Amount	Final Amount	Batch Number	Prepared or Analyzed	Analyst	Lab
Total/NA	Prep	5035			5.0521 g	5 mL	400754	06/03/22 05:15	KLG	TAL PIT
Total/NA	Analysis	EPA 8260D		1	5 mL	5 mL	400746	06/03/22 13:12	KLG	TAL PIT
	Instrument ID:	CHHP3								
Total/NA	Prep	3541			30.2 g	0.5 mL	401048	06/06/22 22:33	VJC	TAL PIT
Total/NA	Analysis	EPA 8270E LL		2	1 mL	1 mL	401286	06/08/22 20:53	VVP	TAL PIT
	Instrument ID:	CHMSD7								
Total/NA	Prep	3541			30.4 g	10.0 mL	400999	06/06/22 11:12	VJC	TAL PIT
Total/NA	Cleanup	3640A			5.0 mL	0.5 mL	401463	06/09/22 15:02	VJC	TAL PIT
Total/NA	Analysis	EPA 8081B LL		1			403330	06/27/22 12:02	APD	TAL PIT
	Instrument ID:	CHGC15								
Total/NA	Prep	3541			30.1 g	1.0 mL	400877	06/03/22 17:18	VJC	TAL PIT
Total/NA	Cleanup	3665A			2 mL	2 mL	400955	06/06/22 04:15	JMO	TAL PIT
Total/NA	Cleanup	3660B			2 mL	2 mL	400956	06/06/22 04:16	JMO	TAL PIT
Total/NA	Analysis	EPA 8082A		10	1 mL	1.0 mL	401661	06/12/22 05:54	JMO	TAL PIT
	Instrument ID:	CHGC8								
Total/NA	Prep	8151A			10.0 g	40.0 mL	401378	06/09/22 03:45	CBY	TAL PIT
Total/NA	Analysis	EPA 8151A		1			401659	06/11/22 16:14	JMO	TAL PIT
	Instrument ID:	CGC1								
Soluble	Leach	DI Leach			10.05 g	100 mL	401417	06/09/22 11:30	MTW	TAL PIT
Soluble	Analysis	EPA 9056A		2.5			401559	06/11/22 10:05	LWM	TAL PIT
	Instrument ID:	CHICS2100B								
Total/NA	Prep	3050B			2.00 g	100 mL	400971	06/06/22 09:19	KWP	TAL PIT
Total/NA	Analysis	EPA 6020B		1			403244	06/25/22 03:31	RSK	TAL PIT
	Instrument ID:	DORY								
Total/NA	Prep	3050B			2.00 g	100 mL	400971	06/06/22 09:19	KWP	TAL PIT
Total/NA	Analysis	EPA 6020B		1			403449	06/25/22 18:30	RSK	TAL PIT
	Instrument ID:	NEMO								
Total/NA	Prep	7471B			1.41 g	100 mL	401486	06/10/22 08:50	RJR	TAL PIT
Total/NA	Analysis	EPA 7471B		1			401629	06/10/22 13:49	RJR	TAL PIT
	Instrument ID:	HGZ								
Total/NA	Prep	3060A			2.54 g	100 mL	400835	06/03/22 13:09	JCR	TAL PIT
Total/NA	Analysis	EPA 7196A		1	25 mL	25 mL	401149	06/07/22 13:42	PMH	TAL PIT
	Instrument ID:	GEN10S								
Total/NA	Prep	9010C			0.55 g	10 mL	401006	06/06/22 15:15	CMR	TAL PIT
Total/NA	Analysis	EPA 9014		1			401078	06/06/22 18:34	CMR	TAL PIT
	Instrument ID:	SEAL1								
Total/NA	Analysis	EPA-Lloyd Kahn		1			401218	06/07/22 14:20	DLF	TAL PIT
	Instrument ID:	FLASHEA								

Lab Chronicle

Client: ESS Group Inc
Project/Site: City Pier, New London CT

Job ID: 180-138845-1

Client Sample ID: SOUTH-23

Date Collected: 05/26/22 13:00
Date Received: 05/28/22 09:00

Lab Sample ID: 180-138845-4

Matrix: Sediment

Prep Type	Batch Type	Batch Method	Run	Dil Factor	Initial Amount	Final Amount	Batch Number	Prepared or Analyzed	Analyst	Lab
TCLP	Leach	EPA 1311			40.80 g	800 mL	402348	06/17/22 17:00	MJC	TAL PIT
TCLP	Prep	3010A			5 mL	50 mL	402673	06/21/22 08:42	EMR	TAL PIT
TCLP	Analysis	EPA 6020B		1			403145	06/23/22 14:48	RSK	TAL PIT
	Instrument ID: A									
Total/NA	Analysis	2540G		1			400782	06/03/22 08:42	BAC	TAL PIT
	Instrument ID: NOEQUIP									
Total/NA	Analysis	7196A		1			403531	06/28/22 15:29	RSR	TAL PIT
	Instrument ID: NOEQUIP									

Client Sample ID: SOUTH-23

Date Collected: 05/26/22 13:00
Date Received: 05/28/22 09:00

Lab Sample ID: 180-138845-4

Matrix: Sediment
Percent Solids: 52.0

Prep Type	Batch Type	Batch Method	Run	Dil Factor	Initial Amount	Final Amount	Batch Number	Prepared or Analyzed	Analyst	Lab
Total/NA	Prep	5035			4.9888 g	5 mL	400754	06/03/22 05:15	KLG	TAL PIT
Total/NA	Analysis	EPA 8260D		1	5 mL	5 mL	400746	06/03/22 13:34	KLG	TAL PIT
	Instrument ID: CHHP3									
Total/NA	Prep	3541			30.5 g	0.5 mL	401048	06/06/22 22:33	VJC	TAL PIT
Total/NA	Analysis	EPA 8270E LL		2	1 mL	1 mL	401286	06/08/22 21:15	VVP	TAL PIT
	Instrument ID: CHMSD7									
Total/NA	Prep	3541			30.5 g	10.0 mL	400999	06/06/22 11:12	VJC	TAL PIT
Total/NA	Cleanup	3640A			5.0 mL	0.5 mL	401463	06/09/22 15:02	VJC	TAL PIT
Total/NA	Analysis	EPA 8081B LL		1			402980	06/23/22 22:35	APD	TAL PIT
	Instrument ID: CHGC15									
Total/NA	Prep	3541			30.3 g	1.0 mL	400877	06/03/22 17:18	VJC	TAL PIT
Total/NA	Cleanup	3665A			2 mL	2 mL	400955	06/06/22 04:15	JMO	TAL PIT
Total/NA	Cleanup	3660B			2 mL	2 mL	400956	06/06/22 04:16	JMO	TAL PIT
Total/NA	Analysis	EPA 8082A		10	1 mL	1.0 mL	401661	06/12/22 06:12	JMO	TAL PIT
	Instrument ID: CHGC8									
Total/NA	Prep	8151A			10.0 g	40.0 mL	401378	06/09/22 03:45	CBY	TAL PIT
Total/NA	Analysis	EPA 8151A		1			401659	06/11/22 16:34	JMO	TAL PIT
	Instrument ID: CGC1									
Soluble	Leach	DI Leach			10.04 g	100 mL	401417	06/09/22 11:30	MTW	TAL PIT
Soluble	Analysis	EPA 9056A		2.5			401671	06/12/22 07:29	LWM	TAL PIT
	Instrument ID: CHICS2100B									
Total/NA	Prep	3050B			2.05 g	100 mL	400971	06/06/22 09:19	KWP	TAL PIT
Total/NA	Analysis	EPA 6020B		1			403244	06/25/22 03:35	RSK	TAL PIT
	Instrument ID: DORY									
Total/NA	Prep	3050B			2.05 g	100 mL	400971	06/06/22 09:19	KWP	TAL PIT
Total/NA	Analysis	EPA 6020B		1			403449	06/25/22 18:32	RSK	TAL PIT
	Instrument ID: NEMO									
Total/NA	Prep	7471B			1.23 g	100 mL	401486	06/10/22 08:50	RJR	TAL PIT
Total/NA	Analysis	EPA 7471B		1			401629	06/10/22 13:50	RJR	TAL PIT
	Instrument ID: HGZ									

Lab Chronicle

Client: ESS Group Inc
Project/Site: City Pier, New London CT

Job ID: 180-138845-1

Client Sample ID: SOUTH-23

Lab Sample ID: 180-138845-4
Date Collected: 05/26/22 13:00
Matrix: Sediment
Date Received: 05/28/22 09:00
Percent Solids: 52.0

Prep Type	Batch Type	Batch Method	Run	Dil Factor	Initial Amount	Final Amount	Batch Number	Prepared or Analyzed	Analyst	Lab
Total/NA	Prep	3060A			2.53 g	100 mL	400835	06/03/22 13:09	JCR	TAL PIT
Total/NA	Analysis	EPA 7196A		1	25 mL	25 mL	401149	06/07/22 13:43	PMH	TAL PIT
	Instrument ID:	GEN10S								
Total/NA	Prep	9010C			0.56 g	10 mL	401006	06/06/22 15:15	CMR	TAL PIT
Total/NA	Analysis	EPA 9014		1			401078	06/06/22 18:40	CMR	TAL PIT
	Instrument ID:	SEAL1								
Total/NA	Analysis	EPA-Lloyd Kahn		1			401218	06/07/22 14:37	DLF	TAL PIT
	Instrument ID:	FLASHEA								

Client Sample ID: SOUTH-1

Lab Sample ID: 180-138845-5
Date Collected: 05/26/22 11:00
Matrix: Solid
Date Received: 05/28/22 09:00

Prep Type	Batch Type	Batch Method	Run	Dil Factor	Initial Amount	Final Amount	Batch Number	Prepared or Analyzed	Analyst	Lab
Total/NA	Analysis	Moisture		1			263530	06/08/22 17:17	OEL4	ELLE
	Instrument ID:	NOEQUIP								

Client Sample ID: SOUTH-1

Lab Sample ID: 180-138845-5
Date Collected: 05/26/22 11:00
Matrix: Solid
Date Received: 05/28/22 09:00
Percent Solids: 38.8

Prep Type	Batch Type	Batch Method	Run	Dil Factor	Initial Amount	Final Amount	Batch Number	Prepared or Analyzed	Analyst	Lab
Total/NA	Prep	3546			15.521 g	1 mL	355673	06/08/22 12:12	D2YP	TAL CF
Total/NA	Analysis	8270E		5			356096	06/13/22 23:38	L0FS	TAL CF
	Instrument ID:	Bart								
Total/NA	Prep	3550C			30.4 g	1 mL	263669	06/09/22 08:35	A2VL	ELLE
Total/NA	Analysis	CT ETPH		5			264378	06/10/22 18:40	UHEW	ELLE
	Instrument ID:	19871-L								
Total/NA	Prep	8318A_S_Prep			20.36 g	10 mL	263589	06/08/22 20:20	K2IL	ELLE
Total/NA	Analysis	8318A		20			264037	06/11/22 03:00	UHEW	ELLE
	Instrument ID:	6388								
Total/NA	Prep	HRMS-Soxtherm			10.30 g	20 uL	268668	06/23/22 12:58	RGA5	ELLE
Total/NA	Analysis	1613B		1			269189	06/25/22 00:04	AQ46	ELLE
	Instrument ID:	DF18471								

Client Sample ID: SOUTH-2

Lab Sample ID: 180-138845-6
Date Collected: 05/26/22 15:30
Matrix: Solid
Date Received: 05/28/22 09:00

Prep Type	Batch Type	Batch Method	Run	Dil Factor	Initial Amount	Final Amount	Batch Number	Prepared or Analyzed	Analyst	Lab
Total/NA	Analysis	Moisture		1			263530	06/08/22 17:17	OEL4	ELLE
	Instrument ID:	NOEQUIP								

Lab Chronicle

Client: ESS Group Inc
Project/Site: City Pier, New London CT

Job ID: 180-138845-1

Client Sample ID: SOUTH-2

Date Collected: 05/26/22 15:30
Date Received: 05/28/22 09:00

Lab Sample ID: 180-138845-6
Matrix: Solid
Percent Solids: 47.3

Prep Type	Batch Type	Batch Method	Run	Dil Factor	Initial Amount	Final Amount	Batch Number	Prepared or Analyzed	Analyst	Lab
Total/NA	Prep	3546			15.745 g	1 mL	355673	06/08/22 12:12	D2YP	TAL CF
Total/NA	Analysis	8270E		5			356096	06/13/22 23:58	L0FS	TAL CF
	Instrument ID:	Bart								
Total/NA	Prep	3550C			30.2 g	1 mL	263669	06/09/22 08:35	A2VL	ELLE
Total/NA	Analysis	CT ETPH		1			264378	06/10/22 19:02	UHEW	ELLE
	Instrument ID:	19871-L								
Total/NA	Prep	8318A_S_Prep			20.31 g	10 mL	263589	06/08/22 20:20	K2IL	ELLE
Total/NA	Analysis	8318A		20			264037	06/11/22 03:49	UHEW	ELLE
	Instrument ID:	6388								
Total/NA	Prep	HRMS-Soxtherm			10.26 g	20 uL	268668	06/23/22 12:58	RGA5	ELLE
Total/NA	Analysis	1613B		1			269189	06/25/22 00:52	AQ46	ELLE
	Instrument ID:	DF18471								

Client Sample ID: SOUTH-3

Date Collected: 05/26/22 13:00
Date Received: 05/28/22 09:00

Lab Sample ID: 180-138845-7
Matrix: Solid

Prep Type	Batch Type	Batch Method	Run	Dil Factor	Initial Amount	Final Amount	Batch Number	Prepared or Analyzed	Analyst	Lab
Total/NA	Analysis	Moisture		1			263530	06/08/22 17:17	OEL4	ELLE
	Instrument ID:	NOEQUIP								

Client Sample ID: SOUTH-3

Date Collected: 05/26/22 13:00
Date Received: 05/28/22 09:00

Lab Sample ID: 180-138845-7
Matrix: Solid
Percent Solids: 49.5

Prep Type	Batch Type	Batch Method	Run	Dil Factor	Initial Amount	Final Amount	Batch Number	Prepared or Analyzed	Analyst	Lab
Total/NA	Prep	3546			15.862 g	1 mL	355673	06/08/22 12:12	D2YP	TAL CF
Total/NA	Analysis	8270E		5			356096	06/14/22 00:17	L0FS	TAL CF
	Instrument ID:	Bart								
Total/NA	Prep	3550C			30.2 g	1 mL	263669	06/09/22 08:35	A2VL	ELLE
Total/NA	Analysis	CT ETPH		1			264378	06/10/22 19:24	UHEW	ELLE
	Instrument ID:	19871-L								
Total/NA	Prep	3550C	RE		30.0 g	1 mL	270482	06/28/22 19:45	K2IL	ELLE
Total/NA	Analysis	CT ETPH	RE	1			270785	06/29/22 16:53	UHEW	ELLE
	Instrument ID:	19871-M								
Total/NA	Prep	8318A_S_Prep			20.37 g	10 mL	263589	06/08/22 20:20	K2IL	ELLE
Total/NA	Analysis	8318A		20			264037	06/11/22 04:39	UHEW	ELLE
	Instrument ID:	6388								
Total/NA	Prep	HRMS-Soxtherm			10.41 g	20 uL	268668	06/23/22 12:58	RGA5	ELLE
Total/NA	Analysis	1613B		1			269189	06/25/22 01:41	AQ46	ELLE
	Instrument ID:	DF18471								

Lab Chronicle

Client: ESS Group Inc
Project/Site: City Pier, New London CT

Job ID: 180-138845-1

Client Sample ID: SOUTH-23

Lab Sample ID: 180-138845-8
Date Collected: 05/26/22 13:00
Matrix: Solid
Date Received: 05/28/22 09:00

Prep Type	Batch Type	Batch Method	Run	Dil Factor	Initial Amount	Final Amount	Batch Number	Prepared or Analyzed	Analyst	Lab
Total/NA	Analysis	Moisture		1			263530	06/08/22 17:17	OEL4	ELLE
	Instrument ID:	NOEQUIP								

Client Sample ID: SOUTH-23

Lab Sample ID: 180-138845-8
Date Collected: 05/26/22 13:00
Matrix: Solid
Date Received: 05/28/22 09:00
Percent Solids: 52.3

Prep Type	Batch Type	Batch Method	Run	Dil Factor	Initial Amount	Final Amount	Batch Number	Prepared or Analyzed	Analyst	Lab
Total/NA	Prep	3546			15.952 g	1 mL	355673	06/08/22 12:12	D2YP	TAL CF
Total/NA	Analysis	8270E		5			356096	06/14/22 00:37	L0FS	TAL CF
	Instrument ID:	Bart								
Total/NA	Prep	3550C			30.3 g	1 mL	263669	06/09/22 08:35	A2VL	ELLE
Total/NA	Analysis	CT ETPH		1			264378	06/10/22 19:45	UHEW	ELLE
	Instrument ID:	19871-L								
Total/NA	Prep	8318A_S_Prep			20.11 g	10 mL	263589	06/08/22 20:20	K2IL	ELLE
Total/NA	Analysis	8318A		20			264037	06/11/22 05:28	UHEW	ELLE
	Instrument ID:	6388								
Total/NA	Prep	HRMS-Soxtherm			10.11 g	20 uL	268668	06/23/22 12:58	RGA5	ELLE
Total/NA	Analysis	1613B		1			269189	06/25/22 02:30	AQ46	ELLE
	Instrument ID:	DF18471								

Laboratory References:

= Acton, MA, Attn: Accounts Payable, 125 Nagog Park, Acton, MA 01719

ELLE = Eurofins Lancaster Laboratories Environment Testing, LLC, 2425 New Holland Pike, Lancaster, PA 17601, TEL (717)656-2300

TAL CF = Eurofins Cedar Falls, 3019 Venture Way, Cedar Falls, IA 50613, TEL (319)277-2401

TAL PIT = Eurofins Pittsburgh, 301 Alpha Drive, RIDC Park, Pittsburgh, PA 15238, TEL (412)963-7058

Lab Chronicle

Client: ESS Group Inc
Project/Site: City Pier, New London CT

Job ID: 180-138845-1

Analyst References:

Lab: ELLE
- Batch Type: Prep
  - A2VL = Robert Reina
  - K2IL = Bradley VanLeuven
  - RGA5 = Luke Timcik
- Batch Type: Analysis
  - AQ46 = Joel Denlinger
  - OEL4 = Edwin Torres
  - UHEW = Heather Williams
  - UYB0 = Yolunder Bunch

Lab: TAL CF
- Batch Type: Prep
  - D2YP = Derrick Klinkenberg
- Batch Type: Analysis
  - L0FS = Dawn Dwyer

Lab: TAL PIT
- Batch Type: Cleanup
  - JMO = John Oravec
  - MJC = Mathew Catanzariti
  - MTW = Michael Wesoloski
  - VJC = Vincent Cervone
- Batch Type: Prep
  - CBY = Charles Yushinski
  - CMR = Carl Reagle
  - EMR = Elizabeth Rarick
  - JCR = Jessica Rodgers
  - KLG = Kathy Gordon
  - KWP = Kenneth Peters
  - RJR = Ron Rosenbaum
  - VJC = Vincent Cervone
- Batch Type: Analysis
  - APD = Aaron DeLeo
  - BAC = Blase Cindric
  - CMR = Carl Reagle
  - DLF = Donald Ferguson
  - ELS = Edwin Shireman
  - JMO = John Oravec
  - KLG = Kathy Gordon
  - LWM = Larry Matko
  - PMH = Paloma Hoelzle
  - RJR = Ron Rosenbaum
  - RSK = Robert Kurtz
  - RSR = Roseann Ruyechan
  - VVP = Vincent Piccolino

Client Sample Results

Client: ESS Group Inc
Project/Site: City Pier, New London CT

Job ID: 180-138845-1

Client Sample ID: SOUTH-1

Date Collected: 05/26/22 11:00
Date Received: 05/28/22 09:00

Lab Sample ID: 180-138845-1

Matrix: Sediment
Percent Solids: 38.7

Method: EPA 8260D - Volatile Organic Compounds by GC/MS

Analyte	Result	Qualifier	RL	MDL	Unit	D	Prepared	Analyzed	Dil Fac
1,1,1-Trichloroethane	ND		13	4.3	ug/Kg	☼	06/03/22 05:15	06/03/22 12:26	1
1,1,2,2-Tetrachloroethane	ND		13	4.0	ug/Kg	☼	06/03/22 05:15	06/03/22 12:26	1
1,1,2-Trichloro-1,2,2-trifluoroethane	ND		13	5.2	ug/Kg	☼	06/03/22 05:15	06/03/22 12:26	1
1,1,2-Trichloroethane	ND		13	2.6	ug/Kg	☼	06/03/22 05:15	06/03/22 12:26	1
1,1-Dichloroethane	ND		13	4.2	ug/Kg	☼	06/03/22 05:15	06/03/22 12:26	1
1,1-Dichloroethene	ND		13	5.9	ug/Kg	☼	06/03/22 05:15	06/03/22 12:26	1
1,2-Dibromo-3-Chloropropane	ND		13	8.4	ug/Kg	☼	06/03/22 05:15	06/03/22 12:26	1
1,2-Dichlorobenzene	ND		13	4.4	ug/Kg	☼	06/03/22 05:15	06/03/22 12:26	1
1,2-Dichloroethane	ND		13	3.7	ug/Kg	☼	06/03/22 05:15	06/03/22 12:26	1
1,2-Dichloropropane	ND		13	3.5	ug/Kg	☼	06/03/22 05:15	06/03/22 12:26	1
1,2,4-Trichlorobenzene	ND		13	6.6	ug/Kg	☼	06/03/22 05:15	06/03/22 12:26	1
1,3-Dichlorobenzene	ND		13	8.0	ug/Kg	☼	06/03/22 05:15	06/03/22 12:26	1
1,4-Dichlorobenzene	ND		13	3.9	ug/Kg	☼	06/03/22 05:15	06/03/22 12:26	1
2-Butanone (MEK)	ND		13	6.6	ug/Kg	☼	06/03/22 05:15	06/03/22 12:26	1
2-Hexanone	ND		13	4.1	ug/Kg	☼	06/03/22 05:15	06/03/22 12:26	1
4-Methyl-2-pentanone (MIBK)	ND		13	4.8	ug/Kg	☼	06/03/22 05:15	06/03/22 12:26	1
Acetone	**29**	**J**	52	10	ug/Kg	☼	06/03/22 05:15	06/03/22 12:26	1
Benzene	ND		13	3.7	ug/Kg	☼	06/03/22 05:15	06/03/22 12:26	1
Bromoform	ND		13	6.6	ug/Kg	☼	06/03/22 05:15	06/03/22 12:26	1
Bromomethane	ND		13	5.9	ug/Kg	☼	06/03/22 05:15	06/03/22 12:26	1
Carbon disulfide	**10**	**J**	13	10	ug/Kg	☼	06/03/22 05:15	06/03/22 12:26	1
Carbon tetrachloride	ND		13	5.3	ug/Kg	☼	06/03/22 05:15	06/03/22 12:26	1
Chlorobenzene	ND		13	3.4	ug/Kg	☼	06/03/22 05:15	06/03/22 12:26	1
Chlorodibromomethane	ND		13	6.5	ug/Kg	☼	06/03/22 05:15	06/03/22 12:26	1
Chloroform	ND		13	4.2	ug/Kg	☼	06/03/22 05:15	06/03/22 12:26	1
Chloromethane	ND		13	5.2	ug/Kg	☼	06/03/22 05:15	06/03/22 12:26	1
Chloroethane	ND		13	7.6	ug/Kg	☼	06/03/22 05:15	06/03/22 12:26	1
cis-1,2-Dichloroethene	ND		13	3.9	ug/Kg	☼	06/03/22 05:15	06/03/22 12:26	1
cis-1,3-Dichloropropene	ND		13	5.8	ug/Kg	☼	06/03/22 05:15	06/03/22 12:26	1
Dichlorobromomethane	ND		13	6.1	ug/Kg	☼	06/03/22 05:15	06/03/22 12:26	1
Dichlorodifluoromethane	ND		13	6.5	ug/Kg	☼	06/03/22 05:15	06/03/22 12:26	1
Ethylbenzene	ND		13	4.8	ug/Kg	☼	06/03/22 05:15	06/03/22 12:26	1
1,2-Dibromoethane	ND		13	3.6	ug/Kg	☼	06/03/22 05:15	06/03/22 12:26	1
Cyclohexane	ND		13	6.2	ug/Kg	☼	06/03/22 05:15	06/03/22 12:26	1
Isopropylbenzene	ND		13	6.8	ug/Kg	☼	06/03/22 05:15	06/03/22 12:26	1
Methyl acetate	ND		65	19	ug/Kg	☼	06/03/22 05:15	06/03/22 12:26	1
Methyl tert-butyl ether	ND		13	3.8	ug/Kg	☼	06/03/22 05:15	06/03/22 12:26	1
Methylcyclohexane	ND		13	6.3	ug/Kg	☼	06/03/22 05:15	06/03/22 12:26	1
Methylene Chloride	ND		13	12	ug/Kg	☼	06/03/22 05:15	06/03/22 12:26	1
Styrene	ND		13	3.9	ug/Kg	☼	06/03/22 05:15	06/03/22 12:26	1
Tetrachloroethene	ND		13	5.2	ug/Kg	☼	06/03/22 05:15	06/03/22 12:26	1
Toluene	ND		13	3.7	ug/Kg	☼	06/03/22 05:15	06/03/22 12:26	1
trans-1,2-Dichloroethene	ND		13	4.6	ug/Kg	☼	06/03/22 05:15	06/03/22 12:26	1
trans-1,3-Dichloropropene	ND		13	5.9	ug/Kg	☼	06/03/22 05:15	06/03/22 12:26	1
Trichloroethene	ND		13	4.1	ug/Kg	☼	06/03/22 05:15	06/03/22 12:26	1
Trichlorofluoromethane	ND		13	11	ug/Kg	☼	06/03/22 05:15	06/03/22 12:26	1
Vinyl chloride	ND		13	9.4	ug/Kg	☼	06/03/22 05:15	06/03/22 12:26	1
Xylenes, Total	ND		26	19	ug/Kg	☼	06/03/22 05:15	06/03/22 12:26	1

Client Sample Results

Client: ESS Group Inc
Project/Site: City Pier, New London CT

Job ID: 180-138845-1

Client Sample ID: SOUTH-1

Date Collected: 05/26/22 11:00
Date Received: 05/28/22 09:00

Lab Sample ID: 180-138845-1

Matrix: Sediment
Percent Solids: 38.7

Surrogate	*%Recovery*	*Qualifier*	*Limits*	*Prepared*	*Analyzed*	*Dil Fac*
1,2-Dichloroethane-d4 (Surr)	*89*		*73 - 135*	*06/03/22 05:15*	*06/03/22 12:26*	*1*
4-Bromofluorobenzene (Surr)	*92*		*60 - 124*	*06/03/22 05:15*	*06/03/22 12:26*	*1*
Dibromofluoromethane (Surr)	*85*		*69 - 126*	*06/03/22 05:15*	*06/03/22 12:26*	*1*
Toluene-d8 (Surr)	*105*		*67 - 134*	*06/03/22 05:15*	*06/03/22 12:26*	*1*

Method: EPA 8270E LL - Semivolatile Organic Compounds (GC/MS)

Analyte	Result	Qualifier	RL	MDL	Unit	D	Prepared	Analyzed	Dil Fac
Anthracene	**520**		85	22	ug/Kg	☼	06/06/22 22:33	06/08/22 20:09	10
Benzo[a]anthracene	**1600**		85	38	ug/Kg	☼	06/06/22 22:33	06/08/22 20:09	10
Benzo[b]fluoranthene	**2500**		85	21	ug/Kg	☼	06/06/22 22:33	06/08/22 20:09	10
Benzo[k]fluoranthene	**890**		85	26	ug/Kg	☼	06/06/22 22:33	06/08/22 20:09	10
Benzo[g,h,i]perylene	**1500**		85	18	ug/Kg	☼	06/06/22 22:33	06/08/22 20:09	10
Benzo[a]pyrene	**1700**		85	37	ug/Kg	☼	06/06/22 22:33	06/08/22 20:09	10
Chrysene	**2000**		85	47	ug/Kg	☼	06/06/22 22:33	06/08/22 20:09	10
Dibenz(a,h)anthracene	**350**		85	54	ug/Kg	☼	06/06/22 22:33	06/08/22 20:09	10
Fluoranthene	**2600**		85	22	ug/Kg	☼	06/06/22 22:33	06/08/22 20:09	10
Fluorene	**220**		85	17	ug/Kg	☼	06/06/22 22:33	06/08/22 20:09	10
Indeno[1,2,3-cd]pyrene	**1400**		85	42	ug/Kg	☼	06/06/22 22:33	06/08/22 20:09	10
Phenanthrene	**1300**		85	23	ug/Kg	☼	06/06/22 22:33	06/08/22 20:09	10
1,4-Dioxane	ND		850	130	ug/Kg	☼	06/06/22 22:33	06/08/22 20:09	10
Pyrene	**3400**		85	20	ug/Kg	☼	06/06/22 22:33	06/08/22 20:09	10
Acenaphthene	**190**		85	24	ug/Kg	☼	06/06/22 22:33	06/08/22 20:09	10
Acenaphthylene	**120**		85	19	ug/Kg	☼	06/06/22 22:33	06/08/22 20:09	10
Naphthalene	**89**		85	17	ug/Kg	☼	06/06/22 22:33	06/08/22 20:09	10
Atrazine	ND		850	190	ug/Kg	☼	06/06/22 22:33	06/08/22 20:09	10

Surrogate	*%Recovery*	*Qualifier*	*Limits*	*Prepared*	*Analyzed*	*Dil Fac*
Nitrobenzene-d5 (Surr)	*49*		*34 - 109*	*06/06/22 22:33*	*06/08/22 20:09*	*10*
2-Fluorobiphenyl	*60*		*35 - 105*	*06/06/22 22:33*	*06/08/22 20:09*	*10*
Terphenyl-d14 (Surr)	*66*		*20 - 117*	*06/06/22 22:33*	*06/08/22 20:09*	*10*

Method: EPA 8081B LL - Organochlorine Pesticides (GC)

Analyte	Result	Qualifier	RL	MDL	Unit	D	Prepared	Analyzed	Dil Fac
Aldrin	ND		0.53	0.17	ug/Kg	☼	06/06/22 11:12	06/27/22 11:47	5
alpha-BHC	ND		0.53	0.13	ug/Kg	☼	06/06/22 11:12	06/27/22 11:47	5
beta-BHC	ND		0.53	0.15	ug/Kg	☼	06/06/22 11:12	06/27/22 11:47	5
delta-BHC	**0.33**	**J**	0.53	0.17	ug/Kg	☼	06/06/22 11:12	06/27/22 11:47	5
gamma-BHC (Lindane)	ND		0.53	0.14	ug/Kg	☼	06/06/22 11:12	06/27/22 11:47	5
cis-Chlordane	ND		0.53	0.13	ug/Kg	☼	06/06/22 11:12	06/27/22 11:47	5
trans-Chlordane	ND		0.53	0.12	ug/Kg	☼	06/06/22 11:12	06/27/22 11:47	5
4,4'-DDD	**4.3**		0.53	0.11	ug/Kg	☼	06/06/22 11:12	06/27/22 11:47	5
4,4'-DDE	ND		0.53	0.11	ug/Kg	☼	06/06/22 11:12	06/27/22 11:47	5
4,4'-DDT	ND		0.53	0.38	ug/Kg	☼	06/06/22 11:12	06/27/22 11:47	5
Dieldrin	**0.50**	**J p**	0.53	0.13	ug/Kg	☼	06/06/22 11:12	06/27/22 11:47	5
Endosulfan I	ND		0.53	0.14	ug/Kg	☼	06/06/22 11:12	06/27/22 11:47	5
Endosulfan II	ND		0.53	0.12	ug/Kg	☼	06/06/22 11:12	06/27/22 11:47	5
Endosulfan sulfate	ND		0.53	0.25	ug/Kg	☼	06/06/22 11:12	06/27/22 11:47	5
Endrin	ND		0.53	0.10	ug/Kg	☼	06/06/22 11:12	06/27/22 11:47	5
Endrin aldehyde	ND		0.53	0.19	ug/Kg	☼	06/06/22 11:12	06/27/22 11:47	5
Endrin ketone	ND		0.53	0.074	ug/Kg	☼	06/06/22 11:12	06/27/22 11:47	5
Heptachlor	ND		0.53	0.17	ug/Kg	☼	06/06/22 11:12	06/27/22 11:47	5

Client Sample ID: SOUTH-1

Date Collected: 05/26/22 11:00
Date Received: 05/28/22 09:00

Lab Sample ID: 180-138845-1

Matrix: Sediment
Percent Solids: 38.7

Method: EPA 8081B LL - Organochlorine Pesticides (GC) (Continued)

Analyte	Result	Qualifier	RL	MDL	Unit	D	Prepared	Analyzed	Dil Fac
Heptachlor epoxide	**0.42**	**J**	0.53	0.14	ug/Kg	☼	06/06/22 11:12	06/27/22 11:47	5
Methoxychlor	ND		0.53	0.21	ug/Kg	☼	06/06/22 11:12	06/27/22 11:47	5
Toxaphene	ND		21	14	ug/Kg	☼	06/06/22 11:12	06/27/22 11:47	5

Surrogate	*%Recovery*	*Qualifier*	*Limits*	*Prepared*	*Analyzed*	*Dil Fac*
Tetrachloro-m-xylene (Surr)	*44*		*10 - 105*	*06/06/22 11:12*	*06/27/22 11:47*	*5*
Tetrachloro-m-xylene (Surr)	*55*		*10 - 105*	*06/06/22 11:12*	*06/27/22 11:47*	*5*
DCB Decachlorobiphenyl (Surr)	*350*	*S1+*	*25 - 107*	*06/06/22 11:12*	*06/27/22 11:47*	*5*
DCB Decachlorobiphenyl (Surr)	*77*	*p*	*25 - 107*	*06/06/22 11:12*	*06/27/22 11:47*	*5*

Method: EPA 8082A - Polychlorinated Biphenyls (PCBs) (GC)

Analyte	Result	Qualifier	RL	MDL	Unit	D	Prepared	Analyzed	Dil Fac
PCB-1016	ND		11	3.5	ug/Kg	☼	06/03/22 17:18	06/12/22 05:16	10
PCB-1221	ND		11	3.8	ug/Kg	☼	06/03/22 17:18	06/12/22 05:16	10
PCB-1232	ND		11	2.6	ug/Kg	☼	06/03/22 17:18	06/12/22 05:16	10
PCB-1242	ND		11	1.6	ug/Kg	☼	06/03/22 17:18	06/12/22 05:16	10
PCB-1248	ND		11	2.6	ug/Kg	☼	06/03/22 17:18	06/12/22 05:16	10
PCB-1254	**43**		11	3.2	ug/Kg	☼	06/03/22 17:18	06/12/22 05:16	10
PCB-1260	ND		11	3.1	ug/Kg	☼	06/03/22 17:18	06/12/22 05:16	10

Surrogate	*%Recovery*	*Qualifier*	*Limits*	*Prepared*	*Analyzed*	*Dil Fac*
DCB Decachlorobiphenyl (Surr)	*158*		*26 - 170*	*06/03/22 17:18*	*06/12/22 05:16*	*10*
DCB Decachlorobiphenyl (Surr)	*210*	*S1+*	*26 - 170*	*06/03/22 17:18*	*06/12/22 05:16*	*10*
Tetrachloro-m-xylene (Surr)	*88*		*33 - 126*	*06/03/22 17:18*	*06/12/22 05:16*	*10*
Tetrachloro-m-xylene (Surr)	*94*		*33 - 126*	*06/03/22 17:18*	*06/12/22 05:16*	*10*

Method: EPA 8151A - Herbicides (GC)

Analyte	Result	Qualifier	RL	MDL	Unit	D	Prepared	Analyzed	Dil Fac
2,4-D	ND		210	150	ug/Kg	☼	06/09/22 03:45	06/11/22 14:17	1
2,4,5-T	ND		52	27	ug/Kg	☼	06/09/22 03:45	06/11/22 14:17	1
Silvex (2,4,5-TP)	ND		52	29	ug/Kg	☼	06/09/22 03:45	06/11/22 14:17	1

Surrogate	*%Recovery*	*Qualifier*	*Limits*	*Prepared*	*Analyzed*	*Dil Fac*
2,4-Dichlorophenylacetic acid	*131*	*S1+*	*48 - 127*	*06/09/22 03:45*	*06/11/22 14:17*	*1*
2,4-Dichlorophenylacetic acid	*152*	*S1+*	*48 - 127*	*06/09/22 03:45*	*06/11/22 14:17*	*1*

Method: EPA 9056A - Anions, Ion Chromatography - Soluble

Analyte	Result	Qualifier	RL	MDL	Unit	D	Prepared	Analyzed	Dil Fac
Chloride	**24000**		64	25	mg/Kg	☼		06/11/22 09:05	2.5

Method: EPA 6020B - Metals (ICP/MS)

Analyte	Result	Qualifier	RL	MDL	Unit	D	Prepared	Analyzed	Dil Fac
Antimony	**0.32**		0.26	0.14	mg/Kg	☼	06/06/22 09:19	06/25/22 03:17	1
Arsenic	**8.7**		0.13	0.075	mg/Kg	☼	06/06/22 09:19	06/25/22 03:17	1
Barium	**48**		1.3	0.79	mg/Kg	☼	06/06/22 09:19	06/25/22 03:17	1
Beryllium	**0.54**		0.13	0.093	mg/Kg	☼	06/06/22 09:19	06/25/22 03:17	1
Cadmium	**0.49**		0.13	0.072	mg/Kg	☼	06/06/22 09:19	06/25/22 03:17	1
Chromium	**44**		0.26	0.23	mg/Kg	☼	06/06/22 09:19	06/25/22 03:17	1
Cobalt	**5.9**		0.064	0.046	mg/Kg	☼	06/06/22 09:19	06/25/22 03:17	1
Copper	**62**		0.39	0.26	mg/Kg	☼	06/06/22 09:19	06/25/22 03:17	1
Lead	**100**		0.13	0.085	mg/Kg	☼	06/06/22 09:19	06/25/22 03:17	1

Client Sample Results

Client: ESS Group Inc
Project/Site: City Pier, New London CT

Job ID: 180-138845-1

Client Sample ID: SOUTH-1

Date Collected: 05/26/22 11:00
Date Received: 05/28/22 09:00

Lab Sample ID: 180-138845-1

Matrix: Sediment
Percent Solids: 38.7

Method: EPA 6020B - Metals (ICP/MS) (Continued)

Analyte	Result	Qualifier	RL	MDL	Unit	D	Prepared	Analyzed	Dil Fac
Nickel	20		0.13	0.12	mg/Kg	☼	06/06/22 09:19	06/25/22 03:17	1
Selenium	0.61	J	0.64	0.16	mg/Kg	☼	06/06/22 09:19	06/25/22 03:17	1
Silver	0.55		0.13	0.036	mg/Kg	☼	06/06/22 09:19	06/25/22 03:17	1
Sodium	12000		64	33	mg/Kg	☼	06/06/22 09:19	06/25/22 03:17	1
Thallium	0.22		0.13	0.090	mg/Kg	☼	06/06/22 09:19	06/25/22 03:17	1
Vanadium	32		0.13	0.12	mg/Kg	☼	06/06/22 09:19	06/25/22 03:17	1
Zinc	140	^2	0.64	0.62	mg/Kg	☼	06/06/22 09:19	06/25/22 18:25	1

Method: EPA 6020B - Metals (ICP/MS) - TCLP

Analyte	Result	Qualifier	RL	MDL	Unit	D	Prepared	Analyzed	Dil Fac
Lead	0.0039	J	0.010	0.0017	mg/L		06/21/22 08:42	06/23/22 14:38	1

Method: EPA 7471B - Mercury (CVAA)

Analyte	Result	Qualifier	RL	MDL	Unit	D	Prepared	Analyzed	Dil Fac
Mercury	0.43		0.042	0.027	mg/Kg	☼	06/10/22 08:50	06/10/22 13:47	1

General Chemistry

Analyte	Result	Qualifier	RL	MDL	Unit	D	Prepared	Analyzed	Dil Fac
Percent Moisture	61.3		0.1	0.1	%			06/02/22 16:56	1
Percent Solids	38.7		0.1	0.1	%			06/02/22 16:56	1
Cr (III)	44		0.50	0.21	mg/Kg			06/28/22 15:29	1
Cr (VI)	ND		1.0	0.54	mg/Kg	☼	06/03/22 13:09	06/07/22 13:41	1
Cyanide, Total	ND	F1	0.49	0.37	mg/Kg	☼	06/06/22 15:15	06/06/22 18:27	1
Total Organic Carbon - Duplicates	48000		2600	2500	mg/Kg	☼		06/07/22 13:41	1

Method: D422 - Grain Size

Analyte	Result	Qualifier	RL	MDL	Unit	D	Prepared	Analyzed	Dil Fac
50 mm (Sieve Size 2 inch)	100.0				% Finer			06/23/22 16:27	1
37.5 mm (Sieve Size 1.5 inch)	100.0				% Finer			06/23/22 16:27	1
25 mm (Sieve Size 1 inch)	100.0				% Finer			06/23/22 16:27	1
9.5 mm (Sieve Size 0.375 inch)	100.0				% Finer			06/23/22 16:27	1
19 mm (Sieve Size 0.75 inch)	100.0				% Finer			06/23/22 16:27	1
4.75 mm (Sieve Size #4)	98.8				% Finer			06/23/22 16:27	1
2 mm (Sieve Size #10)	96.8				% Finer			06/23/22 16:27	1
0.85 mm (Sieve Size #20)	96.1				% Finer			06/23/22 16:27	1
0.425 mm (Sieve Size #40)	95.6				% Finer			06/23/22 16:27	1
0.25 mm (Sieve Size #60)	91.0				% Finer			06/23/22 16:27	1
0.18 mm (Sieve Size #80)	83.3				% Finer			06/23/22 16:27	1
0.15 mm (Sieve Size #100)	82.1				% Finer			06/23/22 16:27	1
0.075 mm (Sieve Size #200)	81.2				% Finer			06/23/22 16:27	1
36.1 um (Hydrometer Reading 1)	46.6				% Finer			06/23/22 16:27	1
22.9 um (Hydrometer Reading 2)	39.0				% Finer			06/23/22 16:27	1
13.4 um (Hydrometer Reading 3)	16.0				% Finer			06/23/22 16:27	1
9.8 um (Hydrometer Reading 4)	12.1				% Finer			06/23/22 16:27	1
6.7 um (Hydrometer Reading 5)	12.1				% Finer			06/23/22 16:27	1
3.3 um (Hydrometer Reading 6)	12.1				% Finer			06/23/22 16:27	1
1.4 um (Hydrometer Reading 7)	1.3				% Finer			06/23/22 16:27	1
Clay	12.1				%			06/23/22 16:27	1
Gravel	1.2				%			06/23/22 16:27	1
Coarse Sand	2.0				%			06/23/22 16:27	1

Client Sample Results

Client: ESS Group Inc
Project/Site: City Pier, New London CT

Job ID: 180-138845-1

Client Sample ID: SOUTH-1

Lab Sample ID: 180-138845-1
Date Collected: 05/26/22 11:00
Matrix: Sediment
Date Received: 05/28/22 09:00
Percent Solids: 38.7

Method: D422 - Grain Size (Continued)

Analyte	Result	Qualifier	RL	MDL	Unit	D	Prepared	Analyzed	Dil Fac
Fine Sand	14.4				%			06/23/22 16:27	1
Medium Sand	1.2				%			06/23/22 16:27	1
Sand	17.6				%			06/23/22 16:27	1
Silt	69.1				%			06/23/22 16:27	1

Client Sample ID: SOUTH-2

Lab Sample ID: 180-138845-2
Date Collected: 05/26/22 15:30
Matrix: Sediment
Date Received: 05/28/22 09:00
Percent Solids: 46.5

Method: EPA 8260D - Volatile Organic Compounds by GC/MS

Analyte	Result	Qualifier	RL	MDL	Unit	D	Prepared	Analyzed	Dil Fac
1,1,1-Trichloroethane	ND		11	3.6	ug/Kg	☼	06/03/22 05:15	06/03/22 12:49	1
1,1,2,2-Tetrachloroethane	ND		11	3.3	ug/Kg	☼	06/03/22 05:15	06/03/22 12:49	1
1,1,2-Trichloro-1,2,2-trifluoroethane	ND		11	4.3	ug/Kg	☼	06/03/22 05:15	06/03/22 12:49	1
1,1,2-Trichloroethane	ND		11	2.1	ug/Kg	☼	06/03/22 05:15	06/03/22 12:49	1
1,1-Dichloroethane	ND		11	3.4	ug/Kg	☼	06/03/22 05:15	06/03/22 12:49	1
1,1-Dichloroethene	ND		11	4.8	ug/Kg	☼	06/03/22 05:15	06/03/22 12:49	1
1,2-Dibromo-3-Chloropropane	ND		11	6.9	ug/Kg	☼	06/03/22 05:15	06/03/22 12:49	1
1,2-Dichlorobenzene	ND		11	3.6	ug/Kg	☼	06/03/22 05:15	06/03/22 12:49	1
1,2-Dichloroethane	ND		11	3.1	ug/Kg	☼	06/03/22 05:15	06/03/22 12:49	1
1,2-Dichloropropane	ND		11	2.8	ug/Kg	☼	06/03/22 05:15	06/03/22 12:49	1
1,2,4-Trichlorobenzene	ND		11	5.4	ug/Kg	☼	06/03/22 05:15	06/03/22 12:49	1
1,3-Dichlorobenzene	ND		11	6.6	ug/Kg	☼	06/03/22 05:15	06/03/22 12:49	1
1,4-Dichlorobenzene	ND		11	3.2	ug/Kg	☼	06/03/22 05:15	06/03/22 12:49	1
2-Butanone (MEK)	ND		11	5.4	ug/Kg	☼	06/03/22 05:15	06/03/22 12:49	1
2-Hexanone	ND		11	3.4	ug/Kg	☼	06/03/22 05:15	06/03/22 12:49	1
4-Methyl-2-pentanone (MIBK)	ND		11	3.9	ug/Kg	☼	06/03/22 05:15	06/03/22 12:49	1
Acetone	ND		43	8.4	ug/Kg	☼	06/03/22 05:15	06/03/22 12:49	1
Benzene	ND		11	3.0	ug/Kg	☼	06/03/22 05:15	06/03/22 12:49	1
Bromoform	ND		11	5.4	ug/Kg	☼	06/03/22 05:15	06/03/22 12:49	1
Bromomethane	ND		11	4.9	ug/Kg	☼	06/03/22 05:15	06/03/22 12:49	1
Carbon disulfide	ND		11	8.6	ug/Kg	☼	06/03/22 05:15	06/03/22 12:49	1
Carbon tetrachloride	ND		11	4.3	ug/Kg	☼	06/03/22 05:15	06/03/22 12:49	1
Chlorobenzene	ND		11	2.8	ug/Kg	☼	06/03/22 05:15	06/03/22 12:49	1
Chlorodibromomethane	ND		11	5.3	ug/Kg	☼	06/03/22 05:15	06/03/22 12:49	1
Chloroform	ND		11	3.4	ug/Kg	☼	06/03/22 05:15	06/03/22 12:49	1
Chloromethane	ND		11	4.2	ug/Kg	☼	06/03/22 05:15	06/03/22 12:49	1
Chloroethane	ND		11	6.3	ug/Kg	☼	06/03/22 05:15	06/03/22 12:49	1
cis-1,2-Dichloroethene	ND		11	3.2	ug/Kg	☼	06/03/22 05:15	06/03/22 12:49	1
cis-1,3-Dichloropropene	ND		11	4.7	ug/Kg	☼	06/03/22 05:15	06/03/22 12:49	1
Dichlorobromomethane	ND		11	5.0	ug/Kg	☼	06/03/22 05:15	06/03/22 12:49	1
Dichlorodifluoromethane	ND		11	5.3	ug/Kg	☼	06/03/22 05:15	06/03/22 12:49	1
Ethylbenzene	ND		11	4.0	ug/Kg	☼	06/03/22 05:15	06/03/22 12:49	1
1,2-Dibromoethane	ND		11	2.9	ug/Kg	☼	06/03/22 05:15	06/03/22 12:49	1
Cyclohexane	ND		11	5.1	ug/Kg	☼	06/03/22 05:15	06/03/22 12:49	1
Isopropylbenzene	ND		11	5.6	ug/Kg	☼	06/03/22 05:15	06/03/22 12:49	1
Methyl acetate	ND		54	16	ug/Kg	☼	06/03/22 05:15	06/03/22 12:49	1
Methyl tert-butyl ether	ND		11	3.1	ug/Kg	☼	06/03/22 05:15	06/03/22 12:49	1
Methylcyclohexane	ND		11	5.2	ug/Kg	☼	06/03/22 05:15	06/03/22 12:49	1
Methylene Chloride	ND		11	9.7	ug/Kg	☼	06/03/22 05:15	06/03/22 12:49	1

Client Sample Results

Client: ESS Group Inc
Project/Site: City Pier, New London CT

Job ID: 180-138845-1

Client Sample ID: SOUTH-2

Date Collected: 05/26/22 15:30
Date Received: 05/28/22 09:00

Lab Sample ID: 180-138845-2

Matrix: Sediment
Percent Solids: 46.5

Method: EPA 8260D - Volatile Organic Compounds by GC/MS (Continued)

Analyte	Result	Qualifier	RL	MDL	Unit	D	Prepared	Analyzed	Dil Fac
Styrene	ND		11	3.2	ug/Kg	☼	06/03/22 05:15	06/03/22 12:49	1
Tetrachloroethene	ND		11	4.3	ug/Kg	☼	06/03/22 05:15	06/03/22 12:49	1
Toluene	ND		11	3.1	ug/Kg	☼	06/03/22 05:15	06/03/22 12:49	1
trans-1,2-Dichloroethene	ND		11	3.7	ug/Kg	☼	06/03/22 05:15	06/03/22 12:49	1
trans-1,3-Dichloropropene	ND		11	4.8	ug/Kg	☼	06/03/22 05:15	06/03/22 12:49	1
Trichloroethene	ND		11	3.4	ug/Kg	☼	06/03/22 05:15	06/03/22 12:49	1
Trichlorofluoromethane	ND		11	8.9	ug/Kg	☼	06/03/22 05:15	06/03/22 12:49	1
Vinyl chloride	ND		11	7.7	ug/Kg	☼	06/03/22 05:15	06/03/22 12:49	1
Xylenes, Total	ND		21	15	ug/Kg	☼	06/03/22 05:15	06/03/22 12:49	1

Surrogate	*%Recovery*	*Qualifier*	*Limits*	*Prepared*	*Analyzed*	*Dil Fac*
1,2-Dichloroethane-d4 (Surr)	*89*		*73 - 135*	*06/03/22 05:15*	*06/03/22 12:49*	*1*
4-Bromofluorobenzene (Surr)	*97*		*60 - 124*	*06/03/22 05:15*	*06/03/22 12:49*	*1*
Dibromofluoromethane (Surr)	*88*		*69 - 126*	*06/03/22 05:15*	*06/03/22 12:49*	*1*
Toluene-d8 (Surr)	*108*		*67 - 134*	*06/03/22 05:15*	*06/03/22 12:49*	*1*

Method: EPA 8270E LL - Semivolatile Organic Compounds (GC/MS)

Analyte	Result	Qualifier	RL	MDL	Unit	D	Prepared	Analyzed	Dil Fac
Anthracene	**42**		36	9.2	ug/Kg	☼	06/06/22 22:33	06/08/22 20:31	5
Benzo[a]anthracene	**110**		36	16	ug/Kg	☼	06/06/22 22:33	06/08/22 20:31	5
Benzo[b]fluoranthene	**130**		36	8.7	ug/Kg	☼	06/06/22 22:33	06/08/22 20:31	5
Benzo[k]fluoranthene	**38**		36	11	ug/Kg	☼	06/06/22 22:33	06/08/22 20:31	5
Benzo[g,h,i]perylene	**100**		36	7.6	ug/Kg	☼	06/06/22 22:33	06/08/22 20:31	5
Benzo[a]pyrene	**130**		36	15	ug/Kg	☼	06/06/22 22:33	06/08/22 20:31	5
Chrysene	**110**		36	20	ug/Kg	☼	06/06/22 22:33	06/08/22 20:31	5
Dibenz(a,h)anthracene	**25**	**J**	36	23	ug/Kg	☼	06/06/22 22:33	06/08/22 20:31	5
Fluoranthene	**130**		36	9.3	ug/Kg	☼	06/06/22 22:33	06/08/22 20:31	5
Fluorene	**19**	**J**	36	7.0	ug/Kg	☼	06/06/22 22:33	06/08/22 20:31	5
Indeno[1,2,3-cd]pyrene	**86**		36	18	ug/Kg	☼	06/06/22 22:33	06/08/22 20:31	5
Phenanthrene	**66**		36	9.5	ug/Kg	☼	06/06/22 22:33	06/08/22 20:31	5
1,4-Dioxane	ND		350	55	ug/Kg	☼	06/06/22 22:33	06/08/22 20:31	5
Pyrene	**330**		36	8.4	ug/Kg	☼	06/06/22 22:33	06/08/22 20:31	5
Acenaphthene	**14**	**J**	36	10	ug/Kg	☼	06/06/22 22:33	06/08/22 20:31	5
Acenaphthylene	**18**	**J**	36	7.7	ug/Kg	☼	06/06/22 22:33	06/08/22 20:31	5
Naphthalene	**18**	**J**	36	6.9	ug/Kg	☼	06/06/22 22:33	06/08/22 20:31	5
Atrazine	ND		360	77	ug/Kg	☼	06/06/22 22:33	06/08/22 20:31	5

Surrogate	*%Recovery*	*Qualifier*	*Limits*	*Prepared*	*Analyzed*	*Dil Fac*
Nitrobenzene-d5 (Surr)	*58*		*34 - 109*	*06/06/22 22:33*	*06/08/22 20:31*	*5*
2-Fluorobiphenyl	*61*		*35 - 105*	*06/06/22 22:33*	*06/08/22 20:31*	*5*
Terphenyl-d14 (Surr)	*74*		*20 - 117*	*06/06/22 22:33*	*06/08/22 20:31*	*5*

Method: EPA 8081B LL - Organochlorine Pesticides (GC)

Analyte	Result	Qualifier	RL	MDL	Unit	D	Prepared	Analyzed	Dil Fac
Aldrin	ND		0.45	0.14	ug/Kg	☼	06/06/22 11:12	06/23/22 22:04	5
alpha-BHC	ND		0.45	0.11	ug/Kg	☼	06/06/22 11:12	06/23/22 22:04	5
beta-BHC	ND		0.45	0.12	ug/Kg	☼	06/06/22 11:12	06/23/22 22:04	5
delta-BHC	ND		0.45	0.14	ug/Kg	☼	06/06/22 11:12	06/23/22 22:04	5
gamma-BHC (Lindane)	ND		0.45	0.11	ug/Kg	☼	06/06/22 11:12	06/23/22 22:04	5
cis-Chlordane	ND		0.45	0.11	ug/Kg	☼	06/06/22 11:12	06/23/22 22:04	5

Client Sample Results

Client: ESS Group Inc
Project/Site: City Pier, New London CT

Job ID: 180-138845-1

Client Sample ID: SOUTH-2

Date Collected: 05/26/22 15:30
Date Received: 05/28/22 09:00

Lab Sample ID: 180-138845-2

Matrix: Sediment
Percent Solids: 46.5

Method: EPA 8081B LL - Organochlorine Pesticides (GC) (Continued)

Analyte	Result	Qualifier	RL	MDL	Unit	D	Prepared	Analyzed	Dil Fac
trans-Chlordane	ND		0.45	0.10	ug/Kg	☼	06/06/22 11:12	06/23/22 22:04	5
4,4'-DDD	ND		0.45	0.093	ug/Kg	☼	06/06/22 11:12	06/23/22 22:04	5
4,4'-DDE	ND		0.45	0.091	ug/Kg	☼	06/06/22 11:12	06/23/22 22:04	5
4,4'-DDT	ND		0.45	0.32	ug/Kg	☼	06/06/22 11:12	06/23/22 22:04	5
Dieldrin	ND		0.45	0.11	ug/Kg	☼	06/06/22 11:12	06/23/22 22:04	5
Endosulfan I	ND		0.45	0.12	ug/Kg	☼	06/06/22 11:12	06/23/22 22:04	5
Endosulfan II	ND		0.45	0.098	ug/Kg	☼	06/06/22 11:12	06/23/22 22:04	5
Endosulfan sulfate	ND		0.45	0.20	ug/Kg	☼	06/06/22 11:12	06/23/22 22:04	5
Endrin	ND		0.45	0.083	ug/Kg	☼	06/06/22 11:12	06/23/22 22:04	5
Endrin aldehyde	ND		0.45	0.16	ug/Kg	☼	06/06/22 11:12	06/23/22 22:04	5
Endrin ketone	ND		0.45	0.061	ug/Kg	☼	06/06/22 11:12	06/23/22 22:04	5
Heptachlor	ND		0.45	0.14	ug/Kg	☼	06/06/22 11:12	06/23/22 22:04	5
Heptachlor epoxide	ND		0.45	0.11	ug/Kg	☼	06/06/22 11:12	06/23/22 22:04	5
Methoxychlor	ND		0.45	0.17	ug/Kg	☼	06/06/22 11:12	06/23/22 22:04	5
Toxaphene	ND		18	12	ug/Kg	☼	06/06/22 11:12	06/23/22 22:04	5

Surrogate	*%Recovery*	*Qualifier*	*Limits*	*Prepared*	*Analyzed*	*Dil Fac*
Tetrachloro-m-xylene (Surr)	*36*		*10 - 105*	*06/06/22 11:12*	*06/23/22 22:04*	*5*
Tetrachloro-m-xylene (Surr)	*41*		*10 - 105*	*06/06/22 11:12*	*06/23/22 22:04*	*5*
DCB Decachlorobiphenyl (Surr)	*170*	*S1+*	*25 - 107*	*06/06/22 11:12*	*06/23/22 22:04*	*5*
DCB Decachlorobiphenyl (Surr)	*62*	*p*	*25 - 107*	*06/06/22 11:12*	*06/23/22 22:04*	*5*

Method: EPA 8082A - Polychlorinated Biphenyls (PCBs) (GC)

Analyte	Result	Qualifier	RL	MDL	Unit	D	Prepared	Analyzed	Dil Fac
PCB-1016	ND		8.8	2.9	ug/Kg	☼	06/03/22 17:18	06/12/22 05:35	10
PCB-1221	ND		8.8	3.1	ug/Kg	☼	06/03/22 17:18	06/12/22 05:35	10
PCB-1232	ND		8.8	2.2	ug/Kg	☼	06/03/22 17:18	06/12/22 05:35	10
PCB-1242	ND		8.8	1.3	ug/Kg	☼	06/03/22 17:18	06/12/22 05:35	10
PCB-1248	ND		8.8	2.1	ug/Kg	☼	06/03/22 17:18	06/12/22 05:35	10
PCB-1254	ND		8.8	2.6	ug/Kg	☼	06/03/22 17:18	06/12/22 05:35	10
PCB-1260	ND		8.8	2.5	ug/Kg	☼	06/03/22 17:18	06/12/22 05:35	10

Surrogate	*%Recovery*	*Qualifier*	*Limits*	*Prepared*	*Analyzed*	*Dil Fac*
DCB Decachlorobiphenyl (Surr)	*86*		*26 - 170*	*06/03/22 17:18*	*06/12/22 05:35*	*10*
DCB Decachlorobiphenyl (Surr)	*68*		*26 - 170*	*06/03/22 17:18*	*06/12/22 05:35*	*10*
Tetrachloro-m-xylene (Surr)	*78*		*33 - 126*	*06/03/22 17:18*	*06/12/22 05:35*	*10*
Tetrachloro-m-xylene (Surr)	*84*		*33 - 126*	*06/03/22 17:18*	*06/12/22 05:35*	*10*

Method: EPA 8151A - Herbicides (GC)

Analyte	Result	Qualifier	RL	MDL	Unit	D	Prepared	Analyzed	Dil Fac
2,4-D	ND		170	130	ug/Kg	☼	06/09/22 03:45	06/11/22 15:55	1
2,4,5-T	ND		43	23	ug/Kg	☼	06/09/22 03:45	06/11/22 15:55	1
Silvex (2,4,5-TP)	ND		43	24	ug/Kg	☼	06/09/22 03:45	06/11/22 15:55	1

Surrogate	*%Recovery*	*Qualifier*	*Limits*	*Prepared*	*Analyzed*	*Dil Fac*
2,4-Dichlorophenylacetic acid	*120*		*48 - 127*	*06/09/22 03:45*	*06/11/22 15:55*	*1*
2,4-Dichlorophenylacetic acid	*134*	*S1+*	*48 - 127*	*06/09/22 03:45*	*06/11/22 15:55*	*1*

Method: EPA 9056A - Anions, Ion Chromatography - Soluble

Analyte	Result	Qualifier	RL	MDL	Unit	D	Prepared	Analyzed	Dil Fac
Chloride	**18000**		54	21	mg/Kg	☼		06/11/22 09:35	2.5

Client Sample Results

Client: ESS Group Inc
Project/Site: City Pier, New London CT

Job ID: 180-138845-1

Client Sample ID: SOUTH-2

Date Collected: 05/26/22 15:30
Date Received: 05/28/22 09:00

Lab Sample ID: 180-138845-2

Matrix: Sediment
Percent Solids: 46.5

Method: EPA 6020B - Metals (ICP/MS)

Analyte	Result	Qualifier	RL	MDL	Unit	D	Prepared	Analyzed	Dil Fac
Antimony	0.18	J	0.21	0.11	mg/Kg	☼	06/06/22 09:19	06/25/22 03:28	1
Arsenic	7.0		0.10	0.061	mg/Kg	☼	06/06/22 09:19	06/25/22 03:28	1
Barium	34		1.0	0.64	mg/Kg	☼	06/06/22 09:19	06/25/22 03:28	1
Beryllium	0.48		0.10	0.076	mg/Kg	☼	06/06/22 09:19	06/25/22 03:28	1
Cadmium	0.23		0.10	0.059	mg/Kg	☼	06/06/22 09:19	06/25/22 03:28	1
Chromium	27		0.21	0.19	mg/Kg	☼	06/06/22 09:19	06/25/22 03:28	1
Cobalt	6.1		0.052	0.038	mg/Kg	☼	06/06/22 09:19	06/25/22 03:28	1
Copper	19		0.31	0.22	mg/Kg	☼	06/06/22 09:19	06/25/22 03:28	1
Lead	33		0.10	0.069	mg/Kg	☼	06/06/22 09:19	06/25/22 03:28	1
Nickel	16		0.10	0.099	mg/Kg	☼	06/06/22 09:19	06/25/22 03:28	1
Selenium	0.49	J	0.52	0.13	mg/Kg	☼	06/06/22 09:19	06/25/22 03:28	1
Silver	0.073	J	0.10	0.029	mg/Kg	☼	06/06/22 09:19	06/25/22 03:28	1
Sodium	9000		52	27	mg/Kg	☼	06/06/22 09:19	06/25/22 03:28	1
Thallium	0.19		0.10	0.073	mg/Kg	☼	06/06/22 09:19	06/25/22 03:28	1
Vanadium	28		0.10	0.099	mg/Kg	☼	06/06/22 09:19	06/25/22 03:28	1
Zinc	47	^2	0.52	0.51	mg/Kg	☼	06/06/22 09:19	06/25/22 18:27	1

Method: EPA 6020B - Metals (ICP/MS) - TCLP

Analyte	Result	Qualifier	RL	MDL	Unit	D	Prepared	Analyzed	Dil Fac
Lead	0.031		0.010	0.0017	mg/L		06/21/22 08:42	06/23/22 14:41	1

Method: EPA 7471B - Mercury (CVAA)

Analyte	Result	Qualifier	RL	MDL	Unit	D	Prepared	Analyzed	Dil Fac
Mercury	0.24		0.030	0.020	mg/Kg	☼	06/10/22 08:50	06/10/22 13:48	1

General Chemistry

Analyte	Result	Qualifier	RL	MDL	Unit	D	Prepared	Analyzed	Dil Fac
Percent Moisture	53.5		0.1	0.1	%			06/02/22 16:56	1
Percent Solids	46.5		0.1	0.1	%			06/02/22 16:56	1
Cr (III)	27		0.50	0.21	mg/Kg			06/28/22 15:29	1
Cr (VI)	ND		0.86	0.46	mg/Kg	☼	06/03/22 13:09	06/07/22 13:41	1
Cyanide, Total	ND		0.40	0.30	mg/Kg	☼	06/06/22 15:15	06/06/22 18:33	1
Total Organic Carbon - Duplicates	37000		2200	2100	mg/Kg	☼		06/07/22 13:58	1

Method: D422 - Grain Size

Analyte	Result	Qualifier	RL	MDL	Unit	D	Prepared	Analyzed	Dil Fac
50 mm (Sieve Size 2 inch)	100.0				% Finer			06/23/22 16:29	1
37.5 mm (Sieve Size 1.5 inch)	100.0				% Finer			06/23/22 16:29	1
25 mm (Sieve Size 1 inch)	100.0				% Finer			06/23/22 16:29	1
9.5 mm (Sieve Size 0.375 inch)	100.0				% Finer			06/23/22 16:29	1
19 mm (Sieve Size 0.75 inch)	100.0				% Finer			06/23/22 16:29	1
4.75 mm (Sieve Size #4)	100.0				% Finer			06/23/22 16:29	1
2 mm (Sieve Size #10)	99.7				% Finer			06/23/22 16:29	1
0.85 mm (Sieve Size #20)	99.5				% Finer			06/23/22 16:29	1
0.425 mm (Sieve Size #40)	99.2				% Finer			06/23/22 16:29	1
0.25 mm (Sieve Size #60)	96.5				% Finer			06/23/22 16:29	1
0.18 mm (Sieve Size #80)	93.2				% Finer			06/23/22 16:29	1
0.15 mm (Sieve Size #100)	92.5				% Finer			06/23/22 16:29	1
0.075 mm (Sieve Size #200)	92.0				% Finer			06/23/22 16:29	1
36.1 um (Hydrometer Reading 1)	38.3				% Finer			06/23/22 16:29	1

Client Sample ID: SOUTH-2

Lab Sample ID: 180-138845-2
Date Collected: 05/26/22 15:30
Matrix: Sediment
Date Received: 05/28/22 09:00
Percent Solids: 46.5

Method: D422 - Grain Size (Continued)

Analyte	Result	Qualifier	RL	MDL	Unit	D	Prepared	Analyzed	Dil Fac
22.9 um (Hydrometer Reading 2)	35.6				% Finer			06/23/22 16:29	1
13.4 um (Hydrometer Reading 3)	27.5				% Finer			06/23/22 16:29	1
9.8 um (Hydrometer Reading 4)	22.1				% Finer			06/23/22 16:29	1
6.7 um (Hydrometer Reading 5)	19.4				% Finer			06/23/22 16:29	1
3.3 um (Hydrometer Reading 6)	11.3				% Finer			06/23/22 16:29	1
1.4 um (Hydrometer Reading 7)	9.0				% Finer			06/23/22 16:29	1
Clay	19.4				%			06/23/22 16:29	1
Gravel	0.0				%			06/23/22 16:29	1
Coarse Sand	0.3				%			06/23/22 16:29	1
Fine Sand	7.2				%			06/23/22 16:29	1
Medium Sand	0.5				%			06/23/22 16:29	1
Sand	8.0				%			06/23/22 16:29	1
Silt	72.6				%			06/23/22 16:29	1

Client Sample ID: SOUTH-3

Lab Sample ID: 180-138845-3
Date Collected: 05/26/22 13:00
Matrix: Sediment
Date Received: 05/28/22 09:00
Percent Solids: 50.6

Method: EPA 8260D - Volatile Organic Compounds by GC/MS

Analyte	Result	Qualifier	RL	MDL	Unit	D	Prepared	Analyzed	Dil Fac
1,1,1-Trichloroethane	ND		9.8	3.3	ug/Kg	☼	06/03/22 05:15	06/03/22 13:12	1
1,1,2,2-Tetrachloroethane	ND		9.8	3.0	ug/Kg	☼	06/03/22 05:15	06/03/22 13:12	1
1,1,2-Trichloro-1,2,2-trifluoroethane	ND		9.8	3.9	ug/Kg	☼	06/03/22 05:15	06/03/22 13:12	1
1,1,2-Trichloroethane	ND		9.8	1.9	ug/Kg	☼	06/03/22 05:15	06/03/22 13:12	1
1,1-Dichloroethane	ND		9.8	3.1	ug/Kg	☼	06/03/22 05:15	06/03/22 13:12	1
1,1-Dichloroethene	ND		9.8	4.4	ug/Kg	☼	06/03/22 05:15	06/03/22 13:12	1
1,2-Dibromo-3-Chloropropane	ND		9.8	6.3	ug/Kg	☼	06/03/22 05:15	06/03/22 13:12	1
1,2-Dichlorobenzene	ND		9.8	3.3	ug/Kg	☼	06/03/22 05:15	06/03/22 13:12	1
1,2-Dichloroethane	ND		9.8	2.8	ug/Kg	☼	06/03/22 05:15	06/03/22 13:12	1
1,2-Dichloropropane	ND		9.8	2.6	ug/Kg	☼	06/03/22 05:15	06/03/22 13:12	1
1,2,4-Trichlorobenzene	ND		9.8	5.0	ug/Kg	☼	06/03/22 05:15	06/03/22 13:12	1
1,3-Dichlorobenzene	ND		9.8	6.0	ug/Kg	☼	06/03/22 05:15	06/03/22 13:12	1
1,4-Dichlorobenzene	ND		9.8	2.9	ug/Kg	☼	06/03/22 05:15	06/03/22 13:12	1
2-Butanone (MEK)	ND		9.8	5.0	ug/Kg	☼	06/03/22 05:15	06/03/22 13:12	1
2-Hexanone	ND		9.8	3.1	ug/Kg	☼	06/03/22 05:15	06/03/22 13:12	1
4-Methyl-2-pentanone (MIBK)	ND		9.8	3.6	ug/Kg	☼	06/03/22 05:15	06/03/22 13:12	1
Acetone	ND		39	7.6	ug/Kg	☼	06/03/22 05:15	06/03/22 13:12	1
Benzene	ND		9.8	2.8	ug/Kg	☼	06/03/22 05:15	06/03/22 13:12	1
Bromoform	ND		9.8	4.9	ug/Kg	☼	06/03/22 05:15	06/03/22 13:12	1
Bromomethane	ND		9.8	4.5	ug/Kg	☼	06/03/22 05:15	06/03/22 13:12	1
Carbon disulfide	ND		9.8	7.8	ug/Kg	☼	06/03/22 05:15	06/03/22 13:12	1
Carbon tetrachloride	ND		9.8	4.0	ug/Kg	☼	06/03/22 05:15	06/03/22 13:12	1
Chlorobenzene	ND		9.8	2.5	ug/Kg	☼	06/03/22 05:15	06/03/22 13:12	1
Chlorodibromomethane	ND		9.8	4.8	ug/Kg	☼	06/03/22 05:15	06/03/22 13:12	1
Chloroform	3.1	J	9.8	3.1	ug/Kg	☼	06/03/22 05:15	06/03/22 13:12	1
Chloromethane	ND		9.8	3.9	ug/Kg	☼	06/03/22 05:15	06/03/22 13:12	1
Chloroethane	ND		9.8	5.7	ug/Kg	☼	06/03/22 05:15	06/03/22 13:12	1
cis-1,2-Dichloroethene	ND		9.8	3.0	ug/Kg	☼	06/03/22 05:15	06/03/22 13:12	1
cis-1,3-Dichloropropene	ND		9.8	4.3	ug/Kg	☼	06/03/22 05:15	06/03/22 13:12	1
Dichlorobromomethane	ND		9.8	4.6	ug/Kg	☼	06/03/22 05:15	06/03/22 13:12	1

Client Sample ID: SOUTH-3

Date Collected: 05/26/22 13:00
Date Received: 05/28/22 09:00

Lab Sample ID: 180-138845-3

Matrix: Sediment
Percent Solids: 50.6

Method: EPA 8260D - Volatile Organic Compounds by GC/MS (Continued)

Analyte	Result	Qualifier	RL	MDL	Unit	D	Prepared	Analyzed	Dil Fac
Dichlorodifluoromethane	ND		9.8	4.9	ug/Kg	☼	06/03/22 05:15	06/03/22 13:12	1
Ethylbenzene	ND		9.8	3.6	ug/Kg	☼	06/03/22 05:15	06/03/22 13:12	1
1,2-Dibromoethane	ND		9.8	2.7	ug/Kg	☼	06/03/22 05:15	06/03/22 13:12	1
Cyclohexane	ND		9.8	4.7	ug/Kg	☼	06/03/22 05:15	06/03/22 13:12	1
Isopropylbenzene	ND		9.8	5.1	ug/Kg	☼	06/03/22 05:15	06/03/22 13:12	1
Methyl acetate	ND		49	14	ug/Kg	☼	06/03/22 05:15	06/03/22 13:12	1
Methyl tert-butyl ether	ND		9.8	2.9	ug/Kg	☼	06/03/22 05:15	06/03/22 13:12	1
Methylcyclohexane	ND		9.8	4.7	ug/Kg	☼	06/03/22 05:15	06/03/22 13:12	1
Methylene Chloride	ND		9.8	8.8	ug/Kg	☼	06/03/22 05:15	06/03/22 13:12	1
Styrene	ND		9.8	2.9	ug/Kg	☼	06/03/22 05:15	06/03/22 13:12	1
Tetrachloroethene	ND		9.8	3.9	ug/Kg	☼	06/03/22 05:15	06/03/22 13:12	1
Toluene	ND		9.8	2.8	ug/Kg	☼	06/03/22 05:15	06/03/22 13:12	1
trans-1,2-Dichloroethene	ND		9.8	3.4	ug/Kg	☼	06/03/22 05:15	06/03/22 13:12	1
trans-1,3-Dichloropropene	ND		9.8	4.4	ug/Kg	☼	06/03/22 05:15	06/03/22 13:12	1
Trichloroethene	ND		9.8	3.1	ug/Kg	☼	06/03/22 05:15	06/03/22 13:12	1
Trichlorofluoromethane	ND		9.8	8.1	ug/Kg	☼	06/03/22 05:15	06/03/22 13:12	1
Vinyl chloride	ND		9.8	7.0	ug/Kg	☼	06/03/22 05:15	06/03/22 13:12	1
Xylenes, Total	ND		20	14	ug/Kg	☼	06/03/22 05:15	06/03/22 13:12	1

Surrogate	*%Recovery*	*Qualifier*	*Limits*	*Prepared*	*Analyzed*	*Dil Fac*
1,2-Dichloroethane-d4 (Surr)	*90*		*73 - 135*	*06/03/22 05:15*	*06/03/22 13:12*	*1*
4-Bromofluorobenzene (Surr)	*95*		*60 - 124*	*06/03/22 05:15*	*06/03/22 13:12*	*1*
Dibromofluoromethane (Surr)	*87*		*69 - 126*	*06/03/22 05:15*	*06/03/22 13:12*	*1*
Toluene-d8 (Surr)	*105*		*67 - 134*	*06/03/22 05:15*	*06/03/22 13:12*	*1*

Method: EPA 8270E LL - Semivolatile Organic Compounds (GC/MS)

Analyte	Result	Qualifier	RL	MDL	Unit	D	Prepared	Analyzed	Dil Fac
Anthracene	**61**		13	3.4	ug/Kg	☼	06/06/22 22:33	06/08/22 20:53	2
Benzo[a]anthracene	**140**		13	5.9	ug/Kg	☼	06/06/22 22:33	06/08/22 20:53	2
Benzo[b]fluoranthene	**160**		13	3.2	ug/Kg	☼	06/06/22 22:33	06/08/22 20:53	2
Benzo[k]fluoranthene	**55**		13	3.9	ug/Kg	☼	06/06/22 22:33	06/08/22 20:53	2
Benzo[g,h,i]perylene	**92**		13	2.8	ug/Kg	☼	06/06/22 22:33	06/08/22 20:53	2
Benzo[a]pyrene	**140**		13	5.7	ug/Kg	☼	06/06/22 22:33	06/08/22 20:53	2
Chrysene	**140**		13	7.3	ug/Kg	☼	06/06/22 22:33	06/08/22 20:53	2
Dibenz(a,h)anthracene	**27**		13	8.4	ug/Kg	☼	06/06/22 22:33	06/08/22 20:53	2
Fluoranthene	**140**		13	3.5	ug/Kg	☼	06/06/22 22:33	06/08/22 20:53	2
Fluorene	**12**	**J**	13	2.6	ug/Kg	☼	06/06/22 22:33	06/08/22 20:53	2
Indeno[1,2,3-cd]pyrene	**85**		13	6.5	ug/Kg	☼	06/06/22 22:33	06/08/22 20:53	2
Phenanthrene	**35**		13	3.5	ug/Kg	☼	06/06/22 22:33	06/08/22 20:53	2
1,4-Dioxane	ND		130	20	ug/Kg	☼	06/06/22 22:33	06/08/22 20:53	2
Pyrene	**330**		13	3.1	ug/Kg	☼	06/06/22 22:33	06/08/22 20:53	2
Acenaphthene	**7.4**	**J**	13	3.8	ug/Kg	☼	06/06/22 22:33	06/08/22 20:53	2
Acenaphthylene	**41**		13	2.9	ug/Kg	☼	06/06/22 22:33	06/08/22 20:53	2
Naphthalene	**17**		13	2.6	ug/Kg	☼	06/06/22 22:33	06/08/22 20:53	2
Atrazine	ND		130	29	ug/Kg	☼	06/06/22 22:33	06/08/22 20:53	2

Surrogate	*%Recovery*	*Qualifier*	*Limits*	*Prepared*	*Analyzed*	*Dil Fac*
Nitrobenzene-d5 (Surr)	*58*		*34 - 109*	*06/06/22 22:33*	*06/08/22 20:53*	*2*
2-Fluorobiphenyl	*63*		*35 - 105*	*06/06/22 22:33*	*06/08/22 20:53*	*2*
Terphenyl-d14 (Surr)	*72*		*20 - 117*	*06/06/22 22:33*	*06/08/22 20:53*	*2*

Client Sample Results

Client: ESS Group Inc
Project/Site: City Pier, New London CT

Job ID: 180-138845-1

Client Sample ID: SOUTH-3

Date Collected: 05/26/22 13:00
Date Received: 05/28/22 09:00

Lab Sample ID: 180-138845-3

Matrix: Sediment
Percent Solids: 50.6

Method: EPA 8081B LL - Organochlorine Pesticides (GC)

Analyte	Result	Qualifier	RL	MDL	Unit	D	Prepared	Analyzed	Dil Fac
Aldrin	**0.045**	**J p**	0.081	0.025	ug/Kg	☼	06/06/22 11:12	06/27/22 12:02	1
alpha-BHC	ND		0.081	0.020	ug/Kg	☼	06/06/22 11:12	06/27/22 12:02	1
beta-BHC	ND		0.081	0.022	ug/Kg	☼	06/06/22 11:12	06/27/22 12:02	1
delta-BHC	ND		0.081	0.026	ug/Kg	☼	06/06/22 11:12	06/27/22 12:02	1
gamma-BHC (Lindane)	ND		0.081	0.021	ug/Kg	☼	06/06/22 11:12	06/27/22 12:02	1
cis-Chlordane	ND		0.081	0.020	ug/Kg	☼	06/06/22 11:12	06/27/22 12:02	1
trans-Chlordane	ND		0.081	0.019	ug/Kg	☼	06/06/22 11:12	06/27/22 12:02	1
4,4'-DDD	**0.67**		0.081	0.017	ug/Kg	☼	06/06/22 11:12	06/27/22 12:02	1
4,4'-DDE	ND		0.081	0.017	ug/Kg	☼	06/06/22 11:12	06/27/22 12:02	1
4,4'-DDT	ND		0.081	0.058	ug/Kg	☼	06/06/22 11:12	06/27/22 12:02	1
Dieldrin	**0.11**	**p**	0.081	0.020	ug/Kg	☼	06/06/22 11:12	06/27/22 12:02	1
Endosulfan I	ND		0.081	0.022	ug/Kg	☼	06/06/22 11:12	06/27/22 12:02	1
Endosulfan II	ND		0.081	0.018	ug/Kg	☼	06/06/22 11:12	06/27/22 12:02	1
Endosulfan sulfate	ND		0.081	0.037	ug/Kg	☼	06/06/22 11:12	06/27/22 12:02	1
Endrin	ND		0.081	0.015	ug/Kg	☼	06/06/22 11:12	06/27/22 12:02	1
Endrin aldehyde	ND		0.081	0.029	ug/Kg	☼	06/06/22 11:12	06/27/22 12:02	1
Endrin ketone	ND		0.081	0.011	ug/Kg	☼	06/06/22 11:12	06/27/22 12:02	1
Heptachlor	**0.091**	**p**	0.081	0.025	ug/Kg	☼	06/06/22 11:12	06/27/22 12:02	1
Heptachlor epoxide	**0.037**	**J**	0.081	0.021	ug/Kg	☼	06/06/22 11:12	06/27/22 12:02	1
Methoxychlor	ND		0.081	0.032	ug/Kg	☼	06/06/22 11:12	06/27/22 12:02	1
Toxaphene	ND		3.2	2.2	ug/Kg	☼	06/06/22 11:12	06/27/22 12:02	1

Surrogate	*%Recovery*	*Qualifier*	*Limits*	*Prepared*	*Analyzed*	*Dil Fac*
Tetrachloro-m-xylene (Surr)	*32*		*10 - 105*	*06/06/22 11:12*	*06/27/22 12:02*	*1*
Tetrachloro-m-xylene (Surr)	*41*		*10 - 105*	*06/06/22 11:12*	*06/27/22 12:02*	*1*
DCB Decachlorobiphenyl (Surr)	*91*		*25 - 107*	*06/06/22 11:12*	*06/27/22 12:02*	*1*
DCB Decachlorobiphenyl (Surr)	*57*	*p*	*25 - 107*	*06/06/22 11:12*	*06/27/22 12:02*	*1*

Method: EPA 8082A - Polychlorinated Biphenyls (PCBs) (GC)

Analyte	Result	Qualifier	RL	MDL	Unit	D	Prepared	Analyzed	Dil Fac
PCB-1016	ND		8.2	2.7	ug/Kg	☼	06/03/22 17:18	06/12/22 05:54	10
PCB-1221	ND		8.2	2.9	ug/Kg	☼	06/03/22 17:18	06/12/22 05:54	10
PCB-1232	ND		8.2	2.0	ug/Kg	☼	06/03/22 17:18	06/12/22 05:54	10
PCB-1242	ND		8.2	1.2	ug/Kg	☼	06/03/22 17:18	06/12/22 05:54	10
PCB-1248	ND		8.2	2.0	ug/Kg	☼	06/03/22 17:18	06/12/22 05:54	10
PCB-1254	ND		8.2	2.5	ug/Kg	☼	06/03/22 17:18	06/12/22 05:54	10
PCB-1260	ND		8.2	2.3	ug/Kg	☼	06/03/22 17:18	06/12/22 05:54	10

Surrogate	*%Recovery*	*Qualifier*	*Limits*	*Prepared*	*Analyzed*	*Dil Fac*
DCB Decachlorobiphenyl (Surr)	*87*		*26 - 170*	*06/03/22 17:18*	*06/12/22 05:54*	*10*
DCB Decachlorobiphenyl (Surr)	*91*		*26 - 170*	*06/03/22 17:18*	*06/12/22 05:54*	*10*
Tetrachloro-m-xylene (Surr)	*87*		*33 - 126*	*06/03/22 17:18*	*06/12/22 05:54*	*10*
Tetrachloro-m-xylene (Surr)	*94*		*33 - 126*	*06/03/22 17:18*	*06/12/22 05:54*	*10*

Method: EPA 8151A - Herbicides (GC)

Analyte	Result	Qualifier	RL	MDL	Unit	D	Prepared	Analyzed	Dil Fac
2,4-D	ND		160	120	ug/Kg	☼	06/09/22 03:45	06/11/22 16:14	1
2,4,5-T	ND		39	21	ug/Kg	☼	06/09/22 03:45	06/11/22 16:14	1
Silvex (2,4,5-TP)	ND		39	22	ug/Kg	☼	06/09/22 03:45	06/11/22 16:14	1

Client Sample Results

Client: ESS Group Inc
Project/Site: City Pier, New London CT

Job ID: 180-138845-1

Client Sample ID: SOUTH-3

Date Collected: 05/26/22 13:00
Date Received: 05/28/22 09:00

Lab Sample ID: 180-138845-3

Matrix: Sediment
Percent Solids: 50.6

Surrogate	*%Recovery*	*Qualifier*	*Limits*	*Prepared*	*Analyzed*	*Dil Fac*
2,4-Dichlorophenylacetic acid	*75*		*48 - 127*	*06/09/22 03:45*	*06/11/22 16:14*	*1*
2,4-Dichlorophenylacetic acid	*81*		*48 - 127*	*06/09/22 03:45*	*06/11/22 16:14*	*1*

Method: EPA 9056A - Anions, Ion Chromatography - Soluble

Analyte	Result	Qualifier	RL	MDL	Unit	D	Prepared	Analyzed	Dil Fac
Chloride	**16000**		49	19	mg/Kg	☼		06/11/22 10:05	2.5

Method: EPA 6020B - Metals (ICP/MS)

Analyte	Result	Qualifier	RL	MDL	Unit	D	Prepared	Analyzed	Dil Fac
Antimony	**0.12**	**J**	0.20	0.10	mg/Kg	☼	06/06/22 09:19	06/25/22 03:31	1
Arsenic	**6.7**		0.099	0.057	mg/Kg	☼	06/06/22 09:19	06/25/22 03:31	1
Barium	**34**		0.99	0.60	mg/Kg	☼	06/06/22 09:19	06/25/22 03:31	1
Beryllium	**0.48**		0.099	0.071	mg/Kg	☼	06/06/22 09:19	06/25/22 03:31	1
Cadmium	**0.20**		0.099	0.055	mg/Kg	☼	06/06/22 09:19	06/25/22 03:31	1
Chromium	**27**		0.20	0.18	mg/Kg	☼	06/06/22 09:19	06/25/22 03:31	1
Cobalt	**5.6**		0.049	0.036	mg/Kg	☼	06/06/22 09:19	06/25/22 03:31	1
Copper	**21**		0.30	0.20	mg/Kg	☼	06/06/22 09:19	06/25/22 03:31	1
Lead	**32**		0.099	0.065	mg/Kg	☼	06/06/22 09:19	06/25/22 03:31	1
Nickel	**15**		0.099	0.093	mg/Kg	☼	06/06/22 09:19	06/25/22 03:31	1
Selenium	**0.44**	**J**	0.49	0.12	mg/Kg	☼	06/06/22 09:19	06/25/22 03:31	1
Silver	**0.19**		0.099	0.028	mg/Kg	☼	06/06/22 09:19	06/25/22 03:31	1
Sodium	**7800**		49	25	mg/Kg	☼	06/06/22 09:19	06/25/22 03:31	1
Thallium	**0.18**		0.099	0.069	mg/Kg	☼	06/06/22 09:19	06/25/22 03:31	1
Vanadium	**26**		0.099	0.093	mg/Kg	☼	06/06/22 09:19	06/25/22 03:31	1
Zinc	**60**	**^2**	0.49	0.48	mg/Kg	☼	06/06/22 09:19	06/25/22 18:30	1

Method: EPA 6020B - Metals (ICP/MS) - TCLP

Analyte	Result	Qualifier	RL	MDL	Unit	D	Prepared	Analyzed	Dil Fac
Lead	**0.033**		0.010	0.0017	mg/L		06/21/22 08:42	06/23/22 14:45	1

Method: EPA 7471B - Mercury (CVAA)

Analyte	Result	Qualifier	RL	MDL	Unit	D	Prepared	Analyzed	Dil Fac
Mercury	**0.16**		0.028	0.018	mg/Kg	☼	06/10/22 08:50	06/10/22 13:49	1

General Chemistry

Analyte	Result	Qualifier	RL	MDL	Unit	D	Prepared	Analyzed	Dil Fac
Percent Moisture	**49.4**		0.1	0.1	%			06/02/22 16:56	1
Percent Solids	**50.6**		0.1	0.1	%			06/02/22 16:56	1
Cr (III)	**27**		0.50	0.21	mg/Kg			06/28/22 15:29	1
Cr (VI)	ND		0.78	0.41	mg/Kg	☼	06/03/22 13:09	06/07/22 13:42	1
Cyanide, Total	ND		0.36	0.27	mg/Kg	☼	06/06/22 15:15	06/06/22 18:34	1
Total Organic Carbon - Duplicates	**24000**		2000	1900	mg/Kg	☼		06/07/22 14:20	1

Method: D422 - Grain Size

Analyte	Result	Qualifier	RL	MDL	Unit	D	Prepared	Analyzed	Dil Fac
50 mm (Sieve Size 2 inch)	**100.0**				% Finer			06/23/22 16:31	1
37.5 mm (Sieve Size 1.5 inch)	**100.0**				% Finer			06/23/22 16:31	1
25 mm (Sieve Size 1 inch)	**100.0**				% Finer			06/23/22 16:31	1
9.5 mm (Sieve Size 0.375 inch)	**100.0**				% Finer			06/23/22 16:31	1
19 mm (Sieve Size 0.75 inch)	**100.0**				% Finer			06/23/22 16:31	1
4.75 mm (Sieve Size #4)	**100.0**				% Finer			06/23/22 16:31	1

Client Sample ID: SOUTH-3

Lab Sample ID: 180-138845-3
Date Collected: 05/26/22 13:00
Matrix: Sediment
Date Received: 05/28/22 09:00
Percent Solids: 50.6

Method: D422 - Grain Size (Continued)

Analyte	Result	Qualifier	RL	MDL	Unit	D	Prepared	Analyzed	Dil Fac
2 mm (Sieve Size #10)	99.0				% Finer			06/23/22 16:31	1
0.85 mm (Sieve Size #20)	98.7				% Finer			06/23/22 16:31	1
0.425 mm (Sieve Size #40)	98.3				% Finer			06/23/22 16:31	1
0.25 mm (Sieve Size #60)	95.0				% Finer			06/23/22 16:31	1
0.18 mm (Sieve Size #80)	91.7				% Finer			06/23/22 16:31	1
0.15 mm (Sieve Size #100)	90.7				% Finer			06/23/22 16:31	1
0.075 mm (Sieve Size #200)	90.1				% Finer			06/23/22 16:31	1
36.1 um (Hydrometer Reading 1)	43.6				% Finer			06/23/22 16:31	1
22.9 um (Hydrometer Reading 2)	40.0				% Finer			06/23/22 16:31	1
13.4 um (Hydrometer Reading 3)	25.7				% Finer			06/23/22 16:31	1
9.8 um (Hydrometer Reading 4)	22.1				% Finer			06/23/22 16:31	1
6.7 um (Hydrometer Reading 5)	14.9				% Finer			06/23/22 16:31	1
3.3 um (Hydrometer Reading 6)	11.4				% Finer			06/23/22 16:31	1
1.4 um (Hydrometer Reading 7)	11.9				% Finer			06/23/22 16:31	1
Clay	14.9				%			06/23/22 16:31	1
Gravel	0.0				%			06/23/22 16:31	1
Coarse Sand	1.0				%			06/23/22 16:31	1
Fine Sand	8.2				%			06/23/22 16:31	1
Medium Sand	0.7				%			06/23/22 16:31	1
Sand	9.9				%			06/23/22 16:31	1
Silt	75.2				%			06/23/22 16:31	1

Client Sample ID: SOUTH-23

Lab Sample ID: 180-138845-4
Date Collected: 05/26/22 13:00
Matrix: Sediment
Date Received: 05/28/22 09:00
Percent Solids: 52.0

Method: EPA 8260D - Volatile Organic Compounds by GC/MS

Analyte	Result	Qualifier	RL	MDL	Unit	D	Prepared	Analyzed	Dil Fac
1,1,1-Trichloroethane	ND		9.6	3.2	ug/Kg	☼	06/03/22 05:15	06/03/22 13:34	1
1,1,2,2-Tetrachloroethane	ND		9.6	2.9	ug/Kg	☼	06/03/22 05:15	06/03/22 13:34	1
1,1,2-Trichloro-1,2,2-trifluoroethane	ND		9.6	3.9	ug/Kg	☼	06/03/22 05:15	06/03/22 13:34	1
1,1,2-Trichloroethane	ND		9.6	1.9	ug/Kg	☼	06/03/22 05:15	06/03/22 13:34	1
1,1-Dichloroethane	ND		9.6	3.1	ug/Kg	☼	06/03/22 05:15	06/03/22 13:34	1
1,1-Dichloroethene	ND		9.6	4.4	ug/Kg	☼	06/03/22 05:15	06/03/22 13:34	1
1,2-Dibromo-3-Chloropropane	ND		9.6	6.2	ug/Kg	☼	06/03/22 05:15	06/03/22 13:34	1
1,2-Dichlorobenzene	ND		9.6	3.2	ug/Kg	☼	06/03/22 05:15	06/03/22 13:34	1
1,2-Dichloroethane	ND		9.6	2.8	ug/Kg	☼	06/03/22 05:15	06/03/22 13:34	1
1,2-Dichloropropane	ND		9.6	2.6	ug/Kg	☼	06/03/22 05:15	06/03/22 13:34	1
1,2,4-Trichlorobenzene	ND		9.6	4.9	ug/Kg	☼	06/03/22 05:15	06/03/22 13:34	1
1,3-Dichlorobenzene	ND		9.6	5.9	ug/Kg	☼	06/03/22 05:15	06/03/22 13:34	1
1,4-Dichlorobenzene	ND		9.6	2.9	ug/Kg	☼	06/03/22 05:15	06/03/22 13:34	1
2-Butanone (MEK)	ND		9.6	4.9	ug/Kg	☼	06/03/22 05:15	06/03/22 13:34	1
2-Hexanone	ND		9.6	3.0	ug/Kg	☼	06/03/22 05:15	06/03/22 13:34	1
4-Methyl-2-pentanone (MIBK)	ND		9.6	3.5	ug/Kg	☼	06/03/22 05:15	06/03/22 13:34	1
Acetone	ND		39	7.5	ug/Kg	☼	06/03/22 05:15	06/03/22 13:34	1
Benzene	ND		9.6	2.7	ug/Kg	☼	06/03/22 05:15	06/03/22 13:34	1
Bromoform	ND		9.6	4.9	ug/Kg	☼	06/03/22 05:15	06/03/22 13:34	1
Bromomethane	ND		9.6	4.4	ug/Kg	☼	06/03/22 05:15	06/03/22 13:34	1
Carbon disulfide	ND		9.6	7.7	ug/Kg	☼	06/03/22 05:15	06/03/22 13:34	1
Carbon tetrachloride	ND		9.6	3.9	ug/Kg	☼	06/03/22 05:15	06/03/22 13:34	1

Client Sample ID: SOUTH-23

Date Collected: 05/26/22 13:00
Date Received: 05/28/22 09:00

Lab Sample ID: 180-138845-4

Matrix: Sediment
Percent Solids: 52.0

Method: EPA 8260D - Volatile Organic Compounds by GC/MS (Continued)

Analyte	Result	Qualifier	RL	MDL	Unit	D	Prepared	Analyzed	Dil Fac
Chlorobenzene	ND		9.6	2.5	ug/Kg	☼	06/03/22 05:15	06/03/22 13:34	1
Chlorodibromomethane	ND		9.6	4.8	ug/Kg	☼	06/03/22 05:15	06/03/22 13:34	1
Chloroform	**3.2**	**J**	9.6	3.1	ug/Kg	☼	06/03/22 05:15	06/03/22 13:34	1
Chloromethane	ND		9.6	3.8	ug/Kg	☼	06/03/22 05:15	06/03/22 13:34	1
Chloroethane	ND		9.6	5.6	ug/Kg	☼	06/03/22 05:15	06/03/22 13:34	1
cis-1,2-Dichloroethene	ND		9.6	2.9	ug/Kg	☼	06/03/22 05:15	06/03/22 13:34	1
cis-1,3-Dichloropropene	ND		9.6	4.3	ug/Kg	☼	06/03/22 05:15	06/03/22 13:34	1
Dichlorobromomethane	ND		9.6	4.5	ug/Kg	☼	06/03/22 05:15	06/03/22 13:34	1
Dichlorodifluoromethane	ND		9.6	4.8	ug/Kg	☼	06/03/22 05:15	06/03/22 13:34	1
Ethylbenzene	ND		9.6	3.6	ug/Kg	☼	06/03/22 05:15	06/03/22 13:34	1
1,2-Dibromoethane	ND		9.6	2.6	ug/Kg	☼	06/03/22 05:15	06/03/22 13:34	1
Cyclohexane	ND		9.6	4.6	ug/Kg	☼	06/03/22 05:15	06/03/22 13:34	1
Isopropylbenzene	ND		9.6	5.0	ug/Kg	☼	06/03/22 05:15	06/03/22 13:34	1
Methyl acetate	ND		48	14	ug/Kg	☼	06/03/22 05:15	06/03/22 13:34	1
Methyl tert-butyl ether	ND		9.6	2.8	ug/Kg	☼	06/03/22 05:15	06/03/22 13:34	1
Methylcyclohexane	ND		9.6	4.6	ug/Kg	☼	06/03/22 05:15	06/03/22 13:34	1
Methylene Chloride	ND		9.6	8.7	ug/Kg	☼	06/03/22 05:15	06/03/22 13:34	1
Styrene	ND		9.6	2.9	ug/Kg	☼	06/03/22 05:15	06/03/22 13:34	1
Tetrachloroethene	ND		9.6	3.9	ug/Kg	☼	06/03/22 05:15	06/03/22 13:34	1
Toluene	ND		9.6	2.8	ug/Kg	☼	06/03/22 05:15	06/03/22 13:34	1
trans-1,2-Dichloroethene	ND		9.6	3.4	ug/Kg	☼	06/03/22 05:15	06/03/22 13:34	1
trans-1,3-Dichloropropene	ND		9.6	4.3	ug/Kg	☼	06/03/22 05:15	06/03/22 13:34	1
Trichloroethene	ND		9.6	3.0	ug/Kg	☼	06/03/22 05:15	06/03/22 13:34	1
Trichlorofluoromethane	ND		9.6	8.0	ug/Kg	☼	06/03/22 05:15	06/03/22 13:34	1
Vinyl chloride	ND		9.6	6.9	ug/Kg	☼	06/03/22 05:15	06/03/22 13:34	1
Xylenes, Total	ND		19	14	ug/Kg	☼	06/03/22 05:15	06/03/22 13:34	1

Surrogate	*%Recovery*	*Qualifier*	*Limits*	*Prepared*	*Analyzed*	*Dil Fac*
1,2-Dichloroethane-d4 (Surr)	*90*		*73 - 135*	*06/03/22 05:15*	*06/03/22 13:34*	*1*
4-Bromofluorobenzene (Surr)	*94*		*60 - 124*	*06/03/22 05:15*	*06/03/22 13:34*	*1*
Dibromofluoromethane (Surr)	*89*		*69 - 126*	*06/03/22 05:15*	*06/03/22 13:34*	*1*
Toluene-d8 (Surr)	*106*		*67 - 134*	*06/03/22 05:15*	*06/03/22 13:34*	*1*

Method: EPA 8270E LL - Semivolatile Organic Compounds (GC/MS)

Analyte	Result	Qualifier	RL	MDL	Unit	D	Prepared	Analyzed	Dil Fac
Anthracene	**69**		13	3.3	ug/Kg	☼	06/06/22 22:33	06/08/22 21:15	2
Benzo[a]anthracene	**170**		13	5.7	ug/Kg	☼	06/06/22 22:33	06/08/22 21:15	2
Benzo[b]fluoranthene	**230**		13	3.1	ug/Kg	☼	06/06/22 22:33	06/08/22 21:15	2
Benzo[k]fluoranthene	**92**		13	3.8	ug/Kg	☼	06/06/22 22:33	06/08/22 21:15	2
Benzo[g,h,i]perylene	**140**		13	2.7	ug/Kg	☼	06/06/22 22:33	06/08/22 21:15	2
Benzo[a]pyrene	**170**		13	5.5	ug/Kg	☼	06/06/22 22:33	06/08/22 21:15	2
Chrysene	**230**		13	7.0	ug/Kg	☼	06/06/22 22:33	06/08/22 21:15	2
Dibenz(a,h)anthracene	**43**		13	8.1	ug/Kg	☼	06/06/22 22:33	06/08/22 21:15	2
Fluoranthene	**140**		13	3.3	ug/Kg	☼	06/06/22 22:33	06/08/22 21:15	2
Fluorene	**17**		13	2.5	ug/Kg	☼	06/06/22 22:33	06/08/22 21:15	2
Indeno[1,2,3-cd]pyrene	**130**		13	6.3	ug/Kg	☼	06/06/22 22:33	06/08/22 21:15	2
Phenanthrene	**64**		13	3.4	ug/Kg	☼	06/06/22 22:33	06/08/22 21:15	2
1,4-Dioxane	ND		130	20	ug/Kg	☼	06/06/22 22:33	06/08/22 21:15	2
Pyrene	**370**		13	3.0	ug/Kg	☼	06/06/22 22:33	06/08/22 21:15	2
Acenaphthene	**9.3**	**J**	13	3.6	ug/Kg	☼	06/06/22 22:33	06/08/22 21:15	2

Client Sample Results

Client: ESS Group Inc
Project/Site: City Pier, New London CT

Job ID: 180-138845-1

Client Sample ID: SOUTH-23

Date Collected: 05/26/22 13:00
Date Received: 05/28/22 09:00

Lab Sample ID: 180-138845-4

Matrix: Sediment
Percent Solids: 52.0

Method: EPA 8270E LL - Semivolatile Organic Compounds (GC/MS) (Continued)

Analyte	Result	Qualifier	RL	MDL	Unit	D	Prepared	Analyzed	Dil Fac
Acenaphthylene	**41**		13	2.8	ug/Kg	☼	06/06/22 22:33	06/08/22 21:15	2
Naphthalene	**170**		13	2.5	ug/Kg	☼	06/06/22 22:33	06/08/22 21:15	2
Atrazine	ND		130	28	ug/Kg	☼	06/06/22 22:33	06/08/22 21:15	2

Surrogate	*%Recovery*	*Qualifier*	*Limits*	*Prepared*	*Analyzed*	*Dil Fac*
Nitrobenzene-d5 (Surr)	*46*		*34 - 109*	*06/06/22 22:33*	*06/08/22 21:15*	*2*
2-Fluorobiphenyl	*53*		*35 - 105*	*06/06/22 22:33*	*06/08/22 21:15*	*2*
Terphenyl-d14 (Surr)	*64*		*20 - 117*	*06/06/22 22:33*	*06/08/22 21:15*	*2*

Method: EPA 8081B LL - Organochlorine Pesticides (GC)

Analyte	Result	Qualifier	RL	MDL	Unit	D	Prepared	Analyzed	Dil Fac
Aldrin	ND		0.079	0.024	ug/Kg	☼	06/06/22 11:12	06/23/22 22:35	1
alpha-BHC	ND		0.079	0.019	ug/Kg	☼	06/06/22 11:12	06/23/22 22:35	1
beta-BHC	ND		0.079	0.022	ug/Kg	☼	06/06/22 11:12	06/23/22 22:35	1
delta-BHC	ND		0.079	0.025	ug/Kg	☼	06/06/22 11:12	06/23/22 22:35	1
gamma-BHC (Lindane)	ND		0.079	0.020	ug/Kg	☼	06/06/22 11:12	06/23/22 22:35	1
cis-Chlordane	ND		0.079	0.020	ug/Kg	☼	06/06/22 11:12	06/23/22 22:35	1
trans-Chlordane	ND		0.079	0.018	ug/Kg	☼	06/06/22 11:12	06/23/22 22:35	1
4,4'-DDD	**0.38**		0.079	0.017	ug/Kg	☼	06/06/22 11:12	06/23/22 22:35	1
4,4'-DDE	ND		0.079	0.016	ug/Kg	☼	06/06/22 11:12	06/23/22 22:35	1
4,4'-DDT	ND		0.079	0.057	ug/Kg	☼	06/06/22 11:12	06/23/22 22:35	1
Dieldrin	**0.073**	**J p**	0.079	0.020	ug/Kg	☼	06/06/22 11:12	06/23/22 22:35	1
Endosulfan I	ND		0.079	0.021	ug/Kg	☼	06/06/22 11:12	06/23/22 22:35	1
Endosulfan II	ND		0.079	0.017	ug/Kg	☼	06/06/22 11:12	06/23/22 22:35	1
Endosulfan sulfate	ND		0.079	0.036	ug/Kg	☼	06/06/22 11:12	06/23/22 22:35	1
Endrin	**0.11**	**p**	0.079	0.015	ug/Kg	☼	06/06/22 11:12	06/23/22 22:35	1
Endrin aldehyde	ND		0.079	0.028	ug/Kg	☼	06/06/22 11:12	06/23/22 22:35	1
Endrin ketone	ND		0.079	0.011	ug/Kg	☼	06/06/22 11:12	06/23/22 22:35	1
Heptachlor	ND		0.079	0.025	ug/Kg	☼	06/06/22 11:12	06/23/22 22:35	1
Heptachlor epoxide	**0.021**	**J p**	0.079	0.020	ug/Kg	☼	06/06/22 11:12	06/23/22 22:35	1
Methoxychlor	ND		0.079	0.031	ug/Kg	☼	06/06/22 11:12	06/23/22 22:35	1
Toxaphene	ND		3.1	2.1	ug/Kg	☼	06/06/22 11:12	06/23/22 22:35	1

Surrogate	*%Recovery*	*Qualifier*	*Limits*	*Prepared*	*Analyzed*	*Dil Fac*
Tetrachloro-m-xylene (Surr)	*28*		*10 - 105*	*06/06/22 11:12*	*06/23/22 22:35*	*1*
Tetrachloro-m-xylene (Surr)	*35*		*10 - 105*	*06/06/22 11:12*	*06/23/22 22:35*	*1*
DCB Decachlorobiphenyl (Surr)	*78*		*25 - 107*	*06/06/22 11:12*	*06/23/22 22:35*	*1*
DCB Decachlorobiphenyl (Surr)	*47*	*p*	*25 - 107*	*06/06/22 11:12*	*06/23/22 22:35*	*1*

Method: EPA 8082A - Polychlorinated Biphenyls (PCBs) (GC)

Analyte	Result	Qualifier	RL	MDL	Unit	D	Prepared	Analyzed	Dil Fac
PCB-1016	ND		7.9	2.6	ug/Kg	☼	06/03/22 17:18	06/12/22 06:12	10
PCB-1221	ND		7.9	2.8	ug/Kg	☼	06/03/22 17:18	06/12/22 06:12	10
PCB-1232	ND		7.9	1.9	ug/Kg	☼	06/03/22 17:18	06/12/22 06:12	10
PCB-1242	ND		7.9	1.2	ug/Kg	☼	06/03/22 17:18	06/12/22 06:12	10
PCB-1248	ND		7.9	1.9	ug/Kg	☼	06/03/22 17:18	06/12/22 06:12	10
PCB-1254	**5.3**	**J p**	7.9	2.4	ug/Kg	☼	06/03/22 17:18	06/12/22 06:12	10
PCB-1260	ND		7.9	2.3	ug/Kg	☼	06/03/22 17:18	06/12/22 06:12	10

Surrogate	*%Recovery*	*Qualifier*	*Limits*	*Prepared*	*Analyzed*	*Dil Fac*
DCB Decachlorobiphenyl (Surr)	*109*		*26 - 170*	*06/03/22 17:18*	*06/12/22 06:12*	*10*

Client Sample Results

Client: ESS Group Inc
Project/Site: City Pier, New London CT

Job ID: 180-138845-1

Client Sample ID: SOUTH-23

Date Collected: 05/26/22 13:00
Date Received: 05/28/22 09:00

Lab Sample ID: 180-138845-4

Matrix: Sediment
Percent Solids: 52.0

Method: EPA 8082A - Polychlorinated Biphenyls (PCBs) (GC) (Continued)

Surrogate	*%Recovery*	*Qualifier*	*Limits*	*Prepared*	*Analyzed*	*Dil Fac*
DCB Decachlorobiphenyl (Surr)	*116*		*26 - 170*	*06/03/22 17:18*	*06/12/22 06:12*	*10*
Tetrachloro-m-xylene (Surr)	*74*		*33 - 126*	*06/03/22 17:18*	*06/12/22 06:12*	*10*
Tetrachloro-m-xylene (Surr)	*80*		*33 - 126*	*06/03/22 17:18*	*06/12/22 06:12*	*10*

Method: EPA 8151A - Herbicides (GC)

Analyte	Result	Qualifier	RL	MDL	Unit	D	Prepared	Analyzed	Dil Fac
2,4-D	ND		150	110	ug/Kg	☼	06/09/22 03:45	06/11/22 16:34	1
2,4,5-T	ND		38	20	ug/Kg	☼	06/09/22 03:45	06/11/22 16:34	1
Silvex (2,4,5-TP)	ND		38	21	ug/Kg	☼	06/09/22 03:45	06/11/22 16:34	1

Surrogate	*%Recovery*	*Qualifier*	*Limits*	*Prepared*	*Analyzed*	*Dil Fac*
2,4-Dichlorophenylacetic acid	*66*		*48 - 127*	*06/09/22 03:45*	*06/11/22 16:34*	*1*
2,4-Dichlorophenylacetic acid	*69*		*48 - 127*	*06/09/22 03:45*	*06/11/22 16:34*	*1*

Method: EPA 9056A - Anions, Ion Chromatography - Soluble

Analyte	Result	Qualifier	RL	MDL	Unit	D	Prepared	Analyzed	Dil Fac
Chloride	**15000**		48	19	mg/Kg	☼		06/12/22 07:29	2.5

Method: EPA 6020B - Metals (ICP/MS)

Analyte	Result	Qualifier	RL	MDL	Unit	D	Prepared	Analyzed	Dil Fac
Antimony	ND		0.19	0.099	mg/Kg	☼	06/06/22 09:19	06/25/22 03:35	1
Arsenic	**6.2**		0.094	0.054	mg/Kg	☼	06/06/22 09:19	06/25/22 03:35	1
Barium	**30**		0.94	0.57	mg/Kg	☼	06/06/22 09:19	06/25/22 03:35	1
Beryllium	**0.42**		0.094	0.067	mg/Kg	☼	06/06/22 09:19	06/25/22 03:35	1
Cadmium	**0.18**		0.094	0.052	mg/Kg	☼	06/06/22 09:19	06/25/22 03:35	1
Chromium	**24**		0.19	0.17	mg/Kg	☼	06/06/22 09:19	06/25/22 03:35	1
Cobalt	**5.2**		0.047	0.034	mg/Kg	☼	06/06/22 09:19	06/25/22 03:35	1
Copper	**17**		0.28	0.19	mg/Kg	☼	06/06/22 09:19	06/25/22 03:35	1
Lead	**23**		0.094	0.062	mg/Kg	☼	06/06/22 09:19	06/25/22 03:35	1
Nickel	**14**		0.094	0.088	mg/Kg	☼	06/06/22 09:19	06/25/22 03:35	1
Selenium	**0.41**	**J**	0.47	0.11	mg/Kg	☼	06/06/22 09:19	06/25/22 03:35	1
Silver	**0.13**		0.094	0.026	mg/Kg	☼	06/06/22 09:19	06/25/22 03:35	1
Sodium	**7800**		47	24	mg/Kg	☼	06/06/22 09:19	06/25/22 03:35	1
Thallium	**0.16**		0.094	0.066	mg/Kg	☼	06/06/22 09:19	06/25/22 03:35	1
Vanadium	**24**		0.094	0.088	mg/Kg	☼	06/06/22 09:19	06/25/22 03:35	1
Zinc	**51**	**^2**	0.47	0.45	mg/Kg	☼	06/06/22 09:19	06/25/22 18:32	1

Method: EPA 6020B - Metals (ICP/MS) - TCLP

Analyte	Result	Qualifier	RL	MDL	Unit	D	Prepared	Analyzed	Dil Fac
Lead	**0.032**		0.010	0.0017	mg/L		06/21/22 08:42	06/23/22 14:48	1

Method: EPA 7471B - Mercury (CVAA)

Analyte	Result	Qualifier	RL	MDL	Unit	D	Prepared	Analyzed	Dil Fac
Mercury	**0.092**		0.031	0.020	mg/Kg	☼	06/10/22 08:50	06/10/22 13:50	1

General Chemistry

Analyte	Result	Qualifier	RL	MDL	Unit	D	Prepared	Analyzed	Dil Fac
Percent Moisture	**48.0**		0.1	0.1	%			06/03/22 08:42	1
Percent Solids	**52.0**		0.1	0.1	%			06/03/22 08:42	1
Cr (III)	**24**		0.50	0.21	mg/Kg			06/28/22 15:29	1
Cr (VI)	ND		0.76	0.40	mg/Kg	☼	06/03/22 13:09	06/07/22 13:43	1

Client Sample ID: SOUTH-23
Date Collected: 05/26/22 13:00
Date Received: 05/28/22 09:00

Lab Sample ID: 180-138845-4
Matrix: Sediment
Percent Solids: 52.0

General Chemistry (Continued)

Analyte	Result	Qualifier	RL	MDL	Unit	D	Prepared	Analyzed	Dil Fac
Cyanide, Total	ND		0.34	0.26	mg/Kg	☼	06/06/22 15:15	06/06/22 18:40	1
Total Organic Carbon - Duplicates	**22000**		1900	1900	mg/Kg	☼		06/07/22 14:37	1

Client Sample ID: SOUTH-1
Date Collected: 05/26/22 11:00
Date Received: 05/28/22 09:00

Lab Sample ID: 180-138845-5
Matrix: Solid
Percent Solids: 38.8

Method: 8270E - Semivolatile Organic Compounds (GC/MS)

Analyte	Result	Qualifier	RL	MDL	Unit	D	Prepared	Analyzed	Dil Fac
Alachlor	ND		2500	470	ug/Kg	☼	06/08/22 12:12	06/13/22 23:38	5
Simazine	ND		2500	700	ug/Kg	☼	06/08/22 12:12	06/13/22 23:38	5

Method: CT ETPH - Connecticut - Extractable Total petroleum Hydrocarbons (GC)

Analyte	Result	Qualifier	RL	MDL	Unit	D	Prepared	Analyzed	Dil Fac
C9-C36	**200**		76	38	mg/Kg	☼	06/09/22 08:35	06/10/22 18:40	5

Surrogate	*%Recovery*	*Qualifier*	*Limits*	*Prepared*	*Analyzed*	*Dil Fac*
o- terphenyl (Surr)	*75*		*50 - 150*	*06/09/22 08:35*	*06/10/22 18:40*	*5*

Method: 8318A - The Determination of Carbamate in Soils and Water by HPLC

Analyte	Result	Qualifier	RL	MDL	Unit	D	Prepared	Analyzed	Dil Fac
Aldicarb	ND	H	130	25	ug/Kg	☼	06/08/22 20:20	06/11/22 03:00	20

Surrogate	*%Recovery*	*Qualifier*	*Limits*	*Prepared*	*Analyzed*	*Dil Fac*
4-Bromo-3,5-Dimethylphenyl-N-methylcarbamate	*66*		*27 - 131*	*06/08/22 20:20*	*06/11/22 03:00*	*20*

Method: 1613B - Dioxins and Furans (HRGC/HRMS)

Analyte	Result	Qualifier	RL	EDL	Unit	D	Prepared	Analyzed	Dil Fac
2,3,7,8-TCDD	**1.1**	**J I**	2.5	0.045	ng/Kg	☼	06/23/22 12:58	06/25/22 00:04	1

Isotope Dilution	*%Recovery*	*Qualifier*	*Limits*	*Prepared*	*Analyzed*	*Dil Fac*
13C-2,3,7,8-TCDD	*70*		*25 - 164*	*06/23/22 12:58*	*06/25/22 00:04*	*1*

General Chemistry

Analyte	Result	Qualifier	RL	MDL	Unit	D	Prepared	Analyzed	Dil Fac
Percent Moisture	**61.2**		1.0	1.0	%			06/08/22 17:17	1

Client Sample ID: SOUTH-2
Date Collected: 05/26/22 15:30
Date Received: 05/28/22 09:00

Lab Sample ID: 180-138845-6
Matrix: Solid
Percent Solids: 47.3

Method: 8270E - Semivolatile Organic Compounds (GC/MS)

Analyte	Result	Qualifier	RL	MDL	Unit	D	Prepared	Analyzed	Dil Fac
Alachlor	ND		2000	380	ug/Kg	☼	06/08/22 12:12	06/13/22 23:58	5
Simazine	ND		2000	560	ug/Kg	☼	06/08/22 12:12	06/13/22 23:58	5

Method: CT ETPH - Connecticut - Extractable Total petroleum Hydrocarbons (GC)

Analyte	Result	Qualifier	RL	MDL	Unit	D	Prepared	Analyzed	Dil Fac
C9-C36	**30**		13	6.3	mg/Kg	☼	06/09/22 08:35	06/10/22 19:02	1

Surrogate	*%Recovery*	*Qualifier*	*Limits*	*Prepared*	*Analyzed*	*Dil Fac*
o- terphenyl (Surr)	*60*		*50 - 150*	*06/09/22 08:35*	*06/10/22 19:02*	*1*

Client Sample Results

Client: ESS Group Inc
Project/Site: City Pier, New London CT

Job ID: 180-138845-1

Client Sample ID: SOUTH-2

Lab Sample ID: 180-138845-6
Date Collected: 05/26/22 15:30
Matrix: Solid
Date Received: 05/28/22 09:00
Percent Solids: 47.3

Method: 8318A - The Determination of Carbamate in Soils and Water by HPLC

Analyte	Result	Qualifier	RL	MDL	Unit	D	Prepared	Analyzed	Dil Fac
Aldicarb	ND	H	100	21	ug/Kg	☼	06/08/22 20:20	06/11/22 03:49	20

Surrogate	*%Recovery*	*Qualifier*	*Limits*	*Prepared*	*Analyzed*	*Dil Fac*
4-Bromo-3,5-Dimethylphenyl-N-methylcarbamate	*62*		*27 - 131*	*06/08/22 20:20*	*06/11/22 03:49*	*20*

Method: 1613B - Dioxins and Furans (HRGC/HRMS)

Analyte	Result	Qualifier	RL	EDL	Unit	D	Prepared	Analyzed	Dil Fac
2,3,7,8-TCDD	**0.084**	**J I**	2.1	0.030	ng/Kg	☼	06/23/22 12:58	06/25/22 00:52	1

Isotope Dilution	*%Recovery*	*Qualifier*	*Limits*	*Prepared*	*Analyzed*	*Dil Fac*
13C-2,3,7,8-TCDD	*69*		*25 - 164*	*06/23/22 12:58*	*06/25/22 00:52*	*1*

General Chemistry

Analyte	Result	Qualifier	RL	MDL	Unit	D	Prepared	Analyzed	Dil Fac
Percent Moisture	**52.7**		1.0	1.0	%			06/08/22 17:17	1

Client Sample ID: SOUTH-3

Lab Sample ID: 180-138845-7
Date Collected: 05/26/22 13:00
Matrix: Solid
Date Received: 05/28/22 09:00
Percent Solids: 49.5

Method: 8270E - Semivolatile Organic Compounds (GC/MS)

Analyte	Result	Qualifier	RL	MDL	Unit	D	Prepared	Analyzed	Dil Fac
Alachlor	ND		1900	360	ug/Kg	☼	06/08/22 12:12	06/14/22 00:17	5
Simazine	ND		1900	530	ug/Kg	☼	06/08/22 12:12	06/14/22 00:17	5

Method: CT ETPH - Connecticut - Extractable Total petroleum Hydrocarbons (GC)

Analyte	Result	Qualifier	RL	MDL	Unit	D	Prepared	Analyzed	Dil Fac
C9-C36	**38**		12	6.0	mg/Kg	☼	06/09/22 08:35	06/10/22 19:24	1

Surrogate	*%Recovery*	*Qualifier*	*Limits*	*Prepared*	*Analyzed*	*Dil Fac*
o- terphenyl (Surr)	*37*	*S1-*	*50 - 150*	*06/09/22 08:35*	*06/10/22 19:24*	*1*

Method: CT ETPH - Connecticut - Extractable Total petroleum Hydrocarbons (GC) - RE

Analyte	Result	Qualifier	RL	MDL	Unit	D	Prepared	Analyzed	Dil Fac
C9-C36	**29**	**H F1 F2**	12	6.1	mg/Kg	☼	06/28/22 19:45	06/29/22 16:53	1

Surrogate	*%Recovery*	*Qualifier*	*Limits*	*Prepared*	*Analyzed*	*Dil Fac*
o- terphenyl (Surr)	*59*		*50 - 150*	*06/28/22 19:45*	*06/29/22 16:53*	*1*

Method: 8318A - The Determination of Carbamate in Soils and Water by HPLC

Analyte	Result	Qualifier	RL	MDL	Unit	D	Prepared	Analyzed	Dil Fac
Aldicarb	ND	H	99	20	ug/Kg	☼	06/08/22 20:20	06/11/22 04:39	20

Surrogate	*%Recovery*	*Qualifier*	*Limits*	*Prepared*	*Analyzed*	*Dil Fac*
4-Bromo-3,5-Dimethylphenyl-N-methylcarbamate	*55*		*27 - 131*	*06/08/22 20:20*	*06/11/22 04:39*	*20*

Method: 1613B - Dioxins and Furans (HRGC/HRMS)

Analyte	Result	Qualifier	RL	EDL	Unit	D	Prepared	Analyzed	Dil Fac
2,3,7,8-TCDD	**0.10**	**J I**	1.9	0.028	ng/Kg	☼	06/23/22 12:58	06/25/22 01:41	1

Isotope Dilution	*%Recovery*	*Qualifier*	*Limits*	*Prepared*	*Analyzed*	*Dil Fac*
13C-2,3,7,8-TCDD	*73*		*25 - 164*	*06/23/22 12:58*	*06/25/22 01:41*	*1*

Client Sample Results

Client: ESS Group Inc
Project/Site: City Pier, New London CT

Job ID: 180-138845-1

Client Sample ID: SOUTH-3

Lab Sample ID: 180-138845-7
Date Collected: 05/26/22 13:00
Matrix: Solid
Date Received: 05/28/22 09:00
Percent Solids: 49.5

General Chemistry

Analyte	Result	Qualifier	RL	MDL	Unit	D	Prepared	Analyzed	Dil Fac
Percent Moisture	50.5		1.0	1.0	%			06/08/22 17:17	1

Client Sample ID: SOUTH-23

Lab Sample ID: 180-138845-8
Date Collected: 05/26/22 13:00
Matrix: Solid
Date Received: 05/28/22 09:00
Percent Solids: 52.3

Method: 8270E - Semivolatile Organic Compounds (GC/MS)

Analyte	Result	Qualifier	RL	MDL	Unit	D	Prepared	Analyzed	Dil Fac
Alachlor	ND		1800	340	ug/Kg	☼	06/08/22 12:12	06/14/22 00:37	5
Simazine	ND		1800	500	ug/Kg	☼	06/08/22 12:12	06/14/22 00:37	5

Method: CT ETPH - Connecticut - Extractable Total petroleum Hydrocarbons (GC)

Analyte	Result	Qualifier	RL	MDL	Unit	D	Prepared	Analyzed	Dil Fac
C9-C36	46	F2	11	5.7	mg/Kg	☼	06/09/22 08:35	06/10/22 19:45	1

Surrogate	*%Recovery*	*Qualifier*	*Limits*	*Prepared*	*Analyzed*	*Dil Fac*
o- terphenyl (Surr)	*57*		*50 - 150*	*06/09/22 08:35*	*06/10/22 19:45*	*1*

Method: 8318A - The Determination of Carbamate in Soils and Water by HPLC

Analyte	Result	Qualifier	RL	MDL	Unit	D	Prepared	Analyzed	Dil Fac
Aldicarb	ND	H	95	19	ug/Kg	☼	06/08/22 20:20	06/11/22 05:28	20

Surrogate	*%Recovery*	*Qualifier*	*Limits*	*Prepared*	*Analyzed*	*Dil Fac*
4-Bromo-3,5-Dimethylphenyl-N-methylcarbamate	*55*		*27 - 131*	*06/08/22 20:20*	*06/11/22 05:28*	*20*

Method: 1613B - Dioxins and Furans (HRGC/HRMS)

Analyte	Result	Qualifier	RL	EDL	Unit	D	Prepared	Analyzed	Dil Fac
2,3,7,8-TCDD	0.24	J	1.9	0.023	ng/Kg	☼	06/23/22 12:58	06/25/22 02:30	1

Isotope Dilution	*%Recovery*	*Qualifier*	*Limits*	*Prepared*	*Analyzed*	*Dil Fac*
13C-2,3,7,8-TCDD	*71*		*25 - 164*	*06/23/22 12:58*	*06/25/22 02:30*	*1*

General Chemistry

Analyte	Result	Qualifier	RL	MDL	Unit	D	Prepared	Analyzed	Dil Fac
Percent Moisture	47.7		1.0	1.0	%			06/08/22 17:17	1

Particle Size of Soils by ASTM D422

				Date Received:	1/0/1900
Sample ID:	0	**Percent Solids:**	41.9%	**Start Date:**	6/23/2022
Lab ID:	180-138845-B-1	**Specific Gravity:**	2.650	**End Date:**	6/27/2022

Shape (> #10): _____ **Non-soil material:** _____

Hardness (> #10): _____

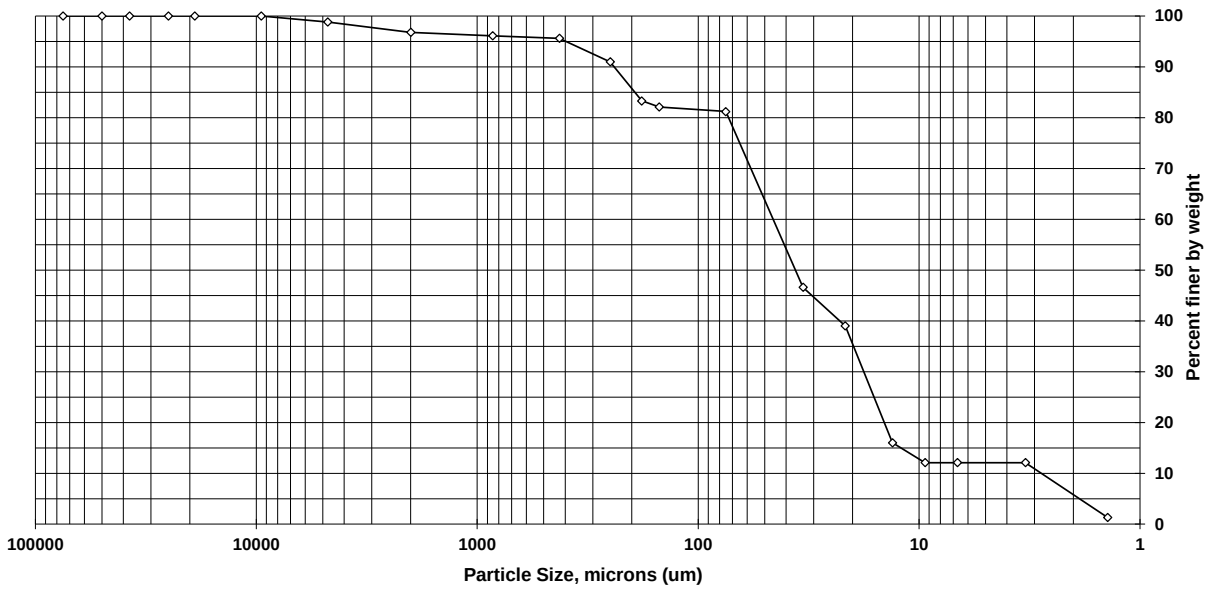

Sieve size	Particle size, um	Percent finer	Incremental percent
3 inch	75000	100.0	0.0
2 inch	50000	100.0	0.0
1.5 inch	37500	100.0	0.0
1 inch	25000	100.0	0.0
3/4 inch	19000	100.0	0.0
3/8 inch	9500	100.0	0.0
#4	4750	98.8	1.2
#10	2000	96.8	2.0
#20	850	96.1	0.7
#40	425	95.6	0.5
#60	250	91.0	4.6
#80	180	83.3	7.7
#100	150	82.1	1.2
#200	75	81.2	0.9
Hyd1	33.5	46.6	34.6
Hyd2	21.6	39.0	7.6
Hyd3	13.2	16.0	23.0
Hyd4	9.4	12.1	3.9
Hyd5	6.7	12.1	0.0
Hyd6	3.3	12.1	0.0
Hyd7	1.4	1.3	10.8

Soil Classification	Percent of sample
Gravel	1.2
Sand	17.6
Coarse Sand	2.0
Medium Sand	1.2
Fine Sand	14.4
Silt	69.1
Clay	12.1

Particle Size of Soils by ASTM D422

				Date Received:	1/0/1900
Sample ID:	0	**Percent Solids:**	59.7%	**Start Date:**	6/23/2022
Lab ID:	180-138845-B-2	**Specific Gravity:**	2.650	**End Date:**	6/27/2022

Shape (> #10): _____ **Non-soil material:** _____

Hardness (> #10): _____

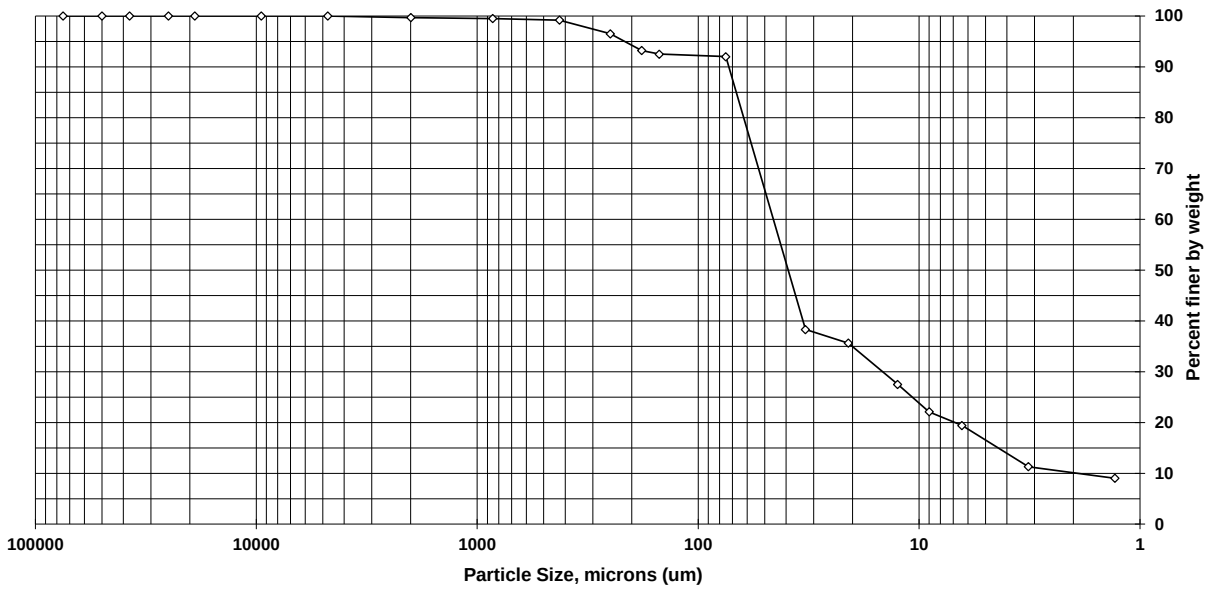

Sieve size	Particle size, um	Percent finer	Incremental percent
3 inch	75000	100.0	0.0
2 inch	50000	100.0	0.0
1.5 inch	37500	100.0	0.0
1 inch	25000	100.0	0.0
3/4 inch	19000	100.0	0.0
3/8 inch	9500	100.0	0.0
#4	4750	100.0	0.0
#10	2000	99.7	0.3
#20	850	99.5	0.2
#40	425	99.2	0.3
#60	250	96.5	2.7
#80	180	93.2	3.3
#100	150	92.5	0.7
#200	75	92.0	0.5
Hyd1	32.7	38.3	53.7
Hyd2	20.9	35.6	2.7
Hyd3	12.5	27.5	8.1
Hyd4	9	22.1	5.4
Hyd5	6.4	19.4	2.7
Hyd6	3.2	11.3	8.1
Hyd7	1.3	9.0	2.3

Soil Classification	Percent of sample
Gravel	0.0
Sand	8.0
Coarse Sand	0.3
Medium Sand	0.5
Fine Sand	7.2
Silt	72.6
Clay	19.4

Particle Size of Soils by ASTM D422

				Date Received:	1/0/1900
Sample ID:	0	**Percent Solids:**	63.3%	**Start Date:**	6/23/2022
Lab ID:	180-138845-M-3	**Specific Gravity:**	2.650	**End Date:**	6/27/2022

Shape (> #10): _____ **Non-soil material:** _____

Hardness (> #10): _____

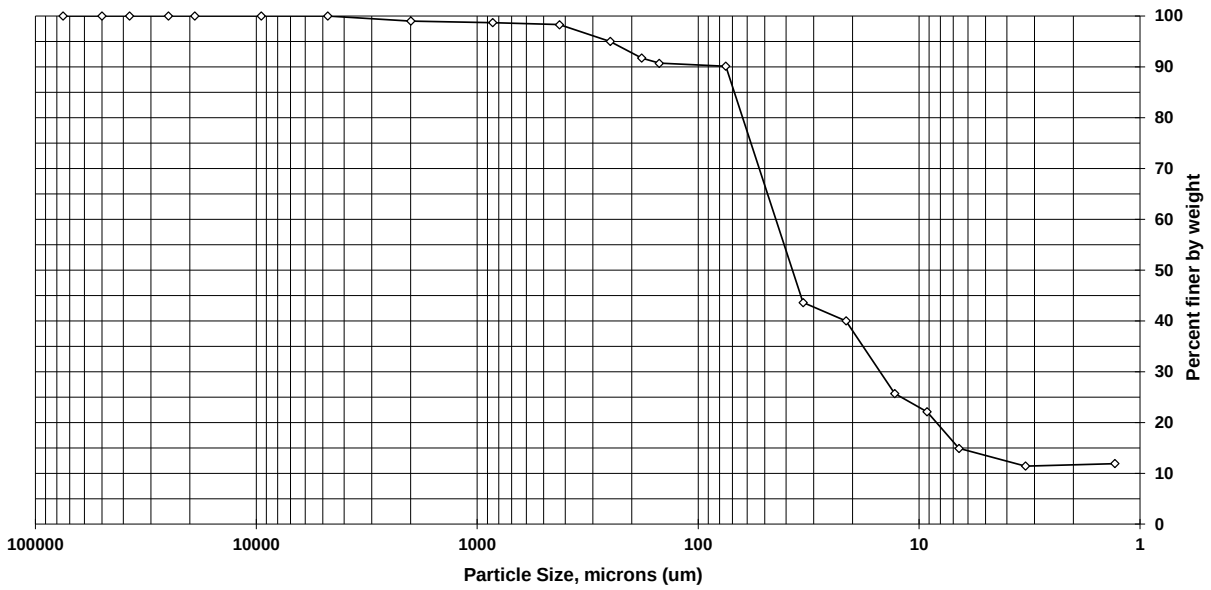

Sieve size	Particle size, um	Percent finer	Incremental percent
3 inch	75000	100.0	0.0
2 inch	50000	100.0	0.0
1.5 inch	37500	100.0	0.0
1 inch	25000	100.0	0.0
3/4 inch	19000	100.0	0.0
3/8 inch	9500	100.0	0.0
#4	4750	100.0	0.0
#10	2000	99.0	1.0
#20	850	98.7	0.3
#40	425	98.3	0.4
#60	250	95.0	3.3
#80	180	91.7	3.3
#100	150	90.7	1.0
#200	75	90.1	0.6
Hyd1	33.5	43.6	46.5
Hyd2	21.4	40.0	3.6
Hyd3	12.9	25.7	14.3
Hyd4	9.2	22.1	3.6
Hyd5	6.6	14.9	7.2
Hyd6	3.3	11.4	3.5
Hyd7	1.3	11.9	0.0

Soil Classification	Percent of sample
Gravel	0.0
Sand	9.9
Coarse Sand	1.0
Medium Sand	0.7
Fine Sand	8.2
Silt	75.2
Clay	14.9

Sediment Grain Size - D422

Client		Date Received	
Client Sample ID		Start Date	06/23/2022 16:27
Lab Sample ID	180-138845-B-1	End Date	06/27/2022 14:57

Dry Weight Determination

Tin Weight	0.80	g
Wet Sample + Tin	6.89	g
Dry Sample + Tin	3.35	g
% Moisture	58.12	%

Non-soil material:	
Shape (> #10):	
Hardness (> #10):	
Date/Time in oven	06/25/2022 8:30
Date/Time out of oven	06/27/2022 9:30

Sample Weights	Tare (g)	Pan+Samp (g)	Samp (g)
Sample Weight (Wet)	114.26	214.38	100.12
Sample Weight (Oven Dried)			41.9

Sample Split (oven dried)	Tare (g)	Pan+Samp (g)	Samp (g)
Sample >=#10			1.33
Sample <#10			40.6
% Passing #10			40.6

Hydrometer Data	
Serial Number	237666
Calib. Date (mm/dd/yyyy)	04/25/2021
Low Temp (C)	17.0
Reading at Low Temp	1.0035
High Temp (C)	23.0
Reading at High Temp	1.0025
Hydrometer Cal Slope	-0.000166667
Hydrometer Cal Intercept	1.006333333
Default Soil Gravity	2.6500

Gravel/Sand Fraction (Sieves)

Sample Fraction	Size (um)	Pan Tare (g)	Pan+Sample (g)	Sample		% Finer	Classification	Sub Class
3 inch	75000			0.00	g	100.0	Gravel	
2 inch	50000			0.00	g	100.0	Gravel	
1.5 inch	37500			0.00	g	100.0	Gravel	
1 inch	25000			0.00	g	100.0	Gravel	
3/4 inch	19000			0.00	g	100.0	Gravel	
3/8 inch	9500			0.00	g	100.0	Gravel	
#4	4750	502.90	503.39	0.49	g	98.8	Gravel	
#10	2000	450.90	451.74	0.84	g	96.8	Sand	Coarse
#20	850	340.46	340.75	0.29	g	96.1	Sand	Medium
#40	425	347.97	348.19	0.22	g	95.6	Sand	Medium
#60	250	330.58	332.50	1.92	g	91.0	Sand	Fine
#80	180	327.21	330.43	3.22	g	83.3	Sand	Fine
#100	150	317.73	318.24	0.51	g	82.1	Sand	Fine
#200	75	308.18	308.55	0.37	g	81.2	Sand	Fine
				0.00	g	81.2		

Adjusted Hydrometer Sample Mass

Hydrometer Sample Mass (g)	41.9

Silt/Clay Fraction (Hydrometer Test)

Hydrometer Test Time (min)	Actual	Spec. Gravity	Temp C	Particle Size (Micron)	% Finer	Classification	Sub Class
2	2	1.0150	21.0	33.5	46.6	Silt	
5	5	1.0130	21.0	21.6	39	Silt	
15	15	1.0070	21.0	13.2	16	Silt	
30	30	1.0060	21.0	9.4	12.1	Silt	
60	60	1.0060	21.0	6.7	12.1	Silt	
250	250	1.0060	21.0	3.3	12.1	Clay	
1440	1440	1.0030	22.0	1.4	1.28	Clay	

Sediment Grain Size - D422

Client		Date Received	
Client Sample ID		Start Date	06/23/2022 16:29
Lab Sample ID	180-138845-B-2	End Date	06/27/2022 15:08

Dry Weight Determination

Tin Weight	0.79	g
Wet Sample + Tin	6.98	g
Dry Sample + Tin	4.48	g
% Moisture	40.30	%

Non-soil material:	
Shape (> #10):	
Hardness (> #10):	
Date/Time in oven	06/25/2022 8:30
Date/Time out of oven	06/27/2022 9:30

Sample Weights	Tare (g)	Pan+Samp (g)	Samp (g)
Sample Weight (Wet)	113.87	213.35	99.48
Sample Weight (Oven Dried)			59.4

Sample Split (oven dried)	Tare (g)	Pan+Samp (g)	Samp (g)
Sample >=#10			0.2
Sample <#10			59.2
% Passing #10			59.5

Hydrometer Data	
Serial Number	237666
Calib. Date (mm/dd/yyyy)	04/25/2021
Low Temp (C)	17.0
Reading at Low Temp	1.0035
High Temp (C)	23.0
Reading at High Temp	1.0025
Hydrometer Cal Slope	-0.000166667
Hydrometer Cal Intercept	1.006333333
Default Soil Gravity	2.6500

Gravel/Sand Fraction (Sieves)

Sample Fraction	Size (um)	Pan Tare (g)	Pan+Sample (g)	Sample		% Finer	Classification	Sub Class
3 inch	75000			0.00	g	100.0	Gravel	
2 inch	50000			0.00	g	100.0	Gravel	
1.5 inch	37500			0.00	g	100.0	Gravel	
1 inch	25000			0.00	g	100.0	Gravel	
3/4 inch	19000			0.00	g	100.0	Gravel	
3/8 inch	9500			0.00	g	100.0	Gravel	
#4	4750			0.00	g	100.0	Gravel	
#10	2000	450.92	451.12	0.20	g	99.7	Sand	Coarse
#20	850	340.44	340.57	0.13	g	99.5	Sand	Medium
#40	425	347.97	348.16	0.19	g	99.2	Sand	Medium
#60	250	330.58	332.19	1.61	g	96.5	Sand	Fine
#80	180	327.21	329.19	1.98	g	93.2	Sand	Fine
#100	150	317.73	318.17	0.44	g	92.5	Sand	Fine
#200	75	308.18	308.50	0.32	g	92.0	Sand	Fine
				0.00	g	92.0		

Adjusted Hydrometer Sample Mass

Hydrometer Sample Mass (g)	59.4

Silt/Clay Fraction (Hydrometer Test)

Hydrometer Test Time (min)	Actual	Spec. Gravity	Temp C	Particle Size (Micron)	% Finer	Classification	Sub Class
2	2	1.0170	21.0	32.7	38.3	Silt	
5	5	1.0160	21.0	20.9	35.6	Silt	
15	15	1.0130	21.0	12.5	27.5	Silt	
30	30	1.0110	21.0	9	22.1	Silt	
60	60	1.0100	21.0	6.4	19.4	Silt	
250	250	1.0070	21.0	3.2	11.3	Clay	
1440	1440	1.0060	22.0	1.3	9.01	Clay	

Sediment Grain Size - D422

Client		Date Received	
Client Sample ID		Start Date	06/23/2022 16:31
Lab Sample ID	180-138845-M-3	End Date	06/27/2022 15:21

Dry Weight Determination

Tin Weight	0.80	g
Wet Sample + Tin	6.55	g
Dry Sample + Tin	4.44	g
% Moisture	36.69	%

Non-soil material:	
Shape (> #10):	
Hardness (> #10):	
Date/Time in oven	06/25/2022 8:30
Date/Time out of oven	06/27/2022 9:30

Sample Weights	Tare (g)	Pan+Samp (g)	Samp (g)
Sample Weight (Wet)	126.69	197.41	70.72
Sample Weight (Oven Dried)			44.8

Sample Split (oven dried)	Tare (g)	Pan+Samp (g)	Samp (g)
Sample >=#10			0.47
Sample <#10			44.3
% Passing #10			62.6

Hydrometer Data	
Serial Number	237666
Calib. Date (mm/dd/yyyy)	04/25/2021
Low Temp (C)	17.0
Reading at Low Temp	1.0035
High Temp (C)	23.0
Reading at High Temp	1.0025
Hydrometer Cal Slope	-0.000166667
Hydrometer Cal Intercept	1.006333333
Default Soil Gravity	2.6500

Gravel/Sand Fraction (Sieves)

Sample Fraction	Size (um)	Pan Tare (g)	Pan+Sample (g)	Sample		% Finer	Classification	Sub Class
3 inch	75000			0.00	g	100.0	Gravel	
2 inch	50000			0.00	g	100.0	Gravel	
1.5 inch	37500			0.00	g	100.0	Gravel	
1 inch	25000			0.00	g	100.0	Gravel	
3/4 inch	19000			0.00	g	100.0	Gravel	
3/8 inch	9500			0.00	g	100.0	Gravel	
#4	4750			0.00	g	100.0	Gravel	
#10	2000	450.94	451.41	0.47	g	99.0	Sand	Coarse
#20	850	340.46	340.59	0.13	g	98.7	Sand	Medium
#40	425	347.97	348.16	0.19	g	98.3	Sand	Medium
#60	250	330.58	332.08	1.50	g	95.0	Sand	Fine
#80	180	327.21	328.69	1.48	g	91.7	Sand	Fine
#100	150	317.73	318.18	0.45	g	90.7	Sand	Fine
#200	75	308.18	308.47	0.29	g	90.1	Sand	Fine
				0.00	g	90.1		

Adjusted Hydrometer Sample Mass

Hydrometer Sample Mass (g)	44.8

Silt/Clay Fraction (Hydrometer Test)

Hydrometer Test Time (min)	Actual	Spec. Gravity	Temp C	Particle Size (Micron)	% Finer	Classification	Sub Class
2	2	1.0150	21.0	33.5	43.6	Silt	
5	5	1.0140	21.0	21.4	40	Silt	
15	15	1.0100	21.0	12.9	25.7	Silt	
30	30	1.0090	21.0	9.2	22.1	Silt	
60	60	1.0070	21.0	6.6	14.9	Silt	
250	250	1.0060	21.0	3.3	11.4	Clay	
1440	1440	1.0060	22.0	1.3	11.9	Clay	

Method: EPA 8260D - Volatile Organic Compounds by GC/MS

Lab Sample ID: MB 180-400746/6
Matrix: Sediment
Analysis Batch: 400746

Client Sample ID: Method Blank
Prep Type: Total/NA

Analyte	MB Result	MB Qualifier	RL	MDL	Unit	D	Prepared	Analyzed	Dil Fac
1,1,1-Trichloroethane	ND		5.0	1.7	ug/Kg			06/03/22 07:45	1
1,1,2,2-Tetrachloroethane	ND		5.0	1.5	ug/Kg			06/03/22 07:45	1
1,1,2-Trichloro-1,2,2-trifluoroethane	ND		5.0	2.0	ug/Kg			06/03/22 07:45	1
1,1,2-Trichloroethane	ND		5.0	0.99	ug/Kg			06/03/22 07:45	1
1,1-Dichloroethane	ND		5.0	1.6	ug/Kg			06/03/22 07:45	1
1,1-Dichloroethene	ND		5.0	2.3	ug/Kg			06/03/22 07:45	1
1,2-Dibromo-3-Chloropropane	ND		5.0	3.2	ug/Kg			06/03/22 07:45	1
1,2-Dichlorobenzene	ND		5.0	1.7	ug/Kg			06/03/22 07:45	1
1,2-Dichloroethane	ND		5.0	1.4	ug/Kg			06/03/22 07:45	1
1,2-Dichloropropane	ND		5.0	1.3	ug/Kg			06/03/22 07:45	1
1,2,4-Trichlorobenzene	ND		5.0	2.5	ug/Kg			06/03/22 07:45	1
1,3-Dichlorobenzene	ND		5.0	3.1	ug/Kg			06/03/22 07:45	1
1,4-Dichlorobenzene	ND		5.0	1.5	ug/Kg			06/03/22 07:45	1
2-Butanone (MEK)	ND		5.0	2.5	ug/Kg			06/03/22 07:45	1
2-Hexanone	ND		5.0	1.6	ug/Kg			06/03/22 07:45	1
4-Methyl-2-pentanone (MIBK)	ND		5.0	1.8	ug/Kg			06/03/22 07:45	1
Acetone	ND		20	3.9	ug/Kg			06/03/22 07:45	1
Benzene	ND		5.0	1.4	ug/Kg			06/03/22 07:45	1
Bromoform	ND		5.0	2.5	ug/Kg			06/03/22 07:45	1
Bromomethane	ND		5.0	2.3	ug/Kg			06/03/22 07:45	1
Carbon disulfide	ND		5.0	4.0	ug/Kg			06/03/22 07:45	1
Carbon tetrachloride	ND		5.0	2.0	ug/Kg			06/03/22 07:45	1
Chlorobenzene	ND		5.0	1.3	ug/Kg			06/03/22 07:45	1
Chlorodibromomethane	ND		5.0	2.5	ug/Kg			06/03/22 07:45	1
Chloroform	ND		5.0	1.6	ug/Kg			06/03/22 07:45	1
Chloromethane	ND		5.0	2.0	ug/Kg			06/03/22 07:45	1
Chloroethane	ND		5.0	2.9	ug/Kg			06/03/22 07:45	1
cis-1,2-Dichloroethene	ND		5.0	1.5	ug/Kg			06/03/22 07:45	1
cis-1,3-Dichloropropene	ND		5.0	2.2	ug/Kg			06/03/22 07:45	1
Dichlorobromomethane	ND		5.0	2.3	ug/Kg			06/03/22 07:45	1
Dichlorodifluoromethane	ND		5.0	2.5	ug/Kg			06/03/22 07:45	1
Ethylbenzene	ND		5.0	1.9	ug/Kg			06/03/22 07:45	1
1,2-Dibromoethane	ND		5.0	1.4	ug/Kg			06/03/22 07:45	1
Cyclohexane	ND		5.0	2.4	ug/Kg			06/03/22 07:45	1
Isopropylbenzene	ND		5.0	2.6	ug/Kg			06/03/22 07:45	1
Methyl acetate	ND		25	7.4	ug/Kg			06/03/22 07:45	1
Methyl tert-butyl ether	ND		5.0	1.5	ug/Kg			06/03/22 07:45	1
Methylcyclohexane	ND		5.0	2.4	ug/Kg			06/03/22 07:45	1
Methylene Chloride	ND		5.0	4.5	ug/Kg			06/03/22 07:45	1
Styrene	ND		5.0	1.5	ug/Kg			06/03/22 07:45	1
Tetrachloroethene	ND		5.0	2.0	ug/Kg			06/03/22 07:45	1
Toluene	ND		5.0	1.4	ug/Kg			06/03/22 07:45	1
trans-1,2-Dichloroethene	ND		5.0	1.8	ug/Kg			06/03/22 07:45	1
trans-1,3-Dichloropropene	ND		5.0	2.3	ug/Kg			06/03/22 07:45	1
Trichloroethene	ND		5.0	1.6	ug/Kg			06/03/22 07:45	1
Trichlorofluoromethane	ND		5.0	4.2	ug/Kg			06/03/22 07:45	1
Vinyl chloride	ND		5.0	3.6	ug/Kg			06/03/22 07:45	1
Xylenes, Total	ND		10	7.2	ug/Kg			06/03/22 07:45	1

Method: EPA 8260D - Volatile Organic Compounds by GC/MS (Continued)

Lab Sample ID: MB 180-400746/6
Matrix: Sediment
Analysis Batch: 400746

Client Sample ID: Method Blank
Prep Type: Total/NA

Surrogate	MB %Recovery	MB Qualifier	Limits	Prepared	Analyzed	Dil Fac
1,2-Dichloroethane-d4 (Surr)	90		73 - 135		06/03/22 07:45	1
4-Bromofluorobenzene (Surr)	92		60 - 124		06/03/22 07:45	1
Dibromofluoromethane (Surr)	82		69 - 126		06/03/22 07:45	1
Toluene-d8 (Surr)	101		67 - 134		06/03/22 07:45	1

Lab Sample ID: LCS 180-400746/3
Matrix: Sediment
Analysis Batch: 400746

Client Sample ID: Lab Control Sample
Prep Type: Total/NA

Analyte	Spike Added	LCS Result	LCS Qualifier	Unit	D	%Rec	%Rec Limits
1,1,1-Trichloroethane	40.0	43.2		ug/Kg		108	72 - 134
1,1,2,2-Tetrachloroethane	40.0	35.6		ug/Kg		89	36 - 170
1,1,2-Trichloro-1,2,2-trifluoroethane	40.0	45.8		ug/Kg		114	59 - 135
1,1,2-Trichloroethane	40.0	37.8		ug/Kg		95	66 - 128
1,1-Dichloroethane	40.0	44.0		ug/Kg		110	73 - 124
1,1-Dichloroethene	40.0	44.7		ug/Kg		112	55 - 136
1,2-Dibromo-3-Chloropropane	40.0	34.6		ug/Kg		86	30 - 163
1,2-Dichlorobenzene	40.0	42.1		ug/Kg		105	76 - 120
1,2-Dichloroethane	40.0	38.4		ug/Kg		96	64 - 140
1,2-Dichloropropane	40.0	42.4		ug/Kg		106	77 - 119
1,2,4-Trichlorobenzene	40.0	37.4		ug/Kg		94	22 - 170
1,3-Dichlorobenzene	40.0	44.0		ug/Kg		110	77 - 121
1,4-Dichlorobenzene	40.0	42.5		ug/Kg		106	79 - 120
2-Butanone (MEK)	40.0	29.1		ug/Kg		73	39 - 157
2-Hexanone	40.0	30.8		ug/Kg		77	42 - 152
4-Methyl-2-pentanone (MIBK)	40.0	33.7		ug/Kg		84	51 - 147
Acetone	40.0	25.2		ug/Kg		63	23 - 170
Benzene	40.0	45.6		ug/Kg		114	77 - 120
Bromoform	40.0	28.3		ug/Kg		71	37 - 147
Bromomethane	40.0	31.9		ug/Kg		80	47 - 149
Carbon disulfide	40.0	45.5		ug/Kg		114	40 - 156
Carbon tetrachloride	40.0	43.2		ug/Kg		108	73 - 130
Chlorobenzene	40.0	43.0		ug/Kg		107	79 - 122
Chlorodibromomethane	40.0	35.7		ug/Kg		89	60 - 134
Chloroform	40.0	42.5		ug/Kg		106	73 - 126
Chloromethane	40.0	39.8		ug/Kg		100	46 - 151
Chloroethane	40.0	38.3		ug/Kg		96	37 - 159
cis-1,2-Dichloroethene	40.0	42.4		ug/Kg		106	77 - 118
cis-1,3-Dichloropropene	40.0	41.4		ug/Kg		104	73 - 127
Dichlorobromomethane	40.0	40.3		ug/Kg		101	75 - 123
Dichlorodifluoromethane	40.0	40.8		ug/Kg		102	26 - 149
Ethylbenzene	40.0	43.9		ug/Kg		110	79 - 119
1,2-Dibromoethane	40.0	36.2		ug/Kg		91	59 - 137
Cyclohexane	40.0	45.5		ug/Kg		114	63 - 143
Isopropylbenzene	40.0	46.4		ug/Kg		116	70 - 125
Methyl acetate	80.0	68.8		ug/Kg		86	20 - 170
Methyl tert-butyl ether	40.0	39.6		ug/Kg		99	58 - 132
Methylcyclohexane	40.0	49.1		ug/Kg		123	70 - 125

Method: EPA 8260D - Volatile Organic Compounds by GC/MS (Continued)

Lab Sample ID: LCS 180-400746/3
Matrix: Sediment
Analysis Batch: 400746

Client Sample ID: Lab Control Sample
Prep Type: Total/NA

Analyte	Spike Added	LCS Result	LCS Qualifier	Unit	D	%Rec	%Rec Limits
Methylene Chloride	40.0	43.2		ug/Kg		108	67 - 131
m-Xylene & p-Xylene	40.0	44.2		ug/Kg		111	77 - 120
o-Xylene	40.0	42.9		ug/Kg		107	78 - 118
Styrene	40.0	41.8		ug/Kg		104	80 - 120
Tetrachloroethene	40.0	41.9		ug/Kg		105	71 - 121
Toluene	40.0	45.8		ug/Kg		114	76 - 120
trans-1,2-Dichloroethene	40.0	43.8		ug/Kg		109	75 - 122
trans-1,3-Dichloropropene	40.0	40.8		ug/Kg		102	68 - 133
Trichloroethene	40.0	41.6		ug/Kg		104	69 - 118
Trichlorofluoromethane	40.0	39.5		ug/Kg		99	32 - 149
Vinyl chloride	40.0	38.5		ug/Kg		96	64 - 134
Xylenes, Total	80.0	87.1		ug/Kg		109	78 - 118

Surrogate	*LCS %Recovery*	*LCS Qualifier*	*Limits*
1,2-Dichloroethane-d4 (Surr)	*87*		*73 - 135*
4-Bromofluorobenzene (Surr)	*93*		*60 - 124*
Dibromofluoromethane (Surr)	*90*		*69 - 126*
Toluene-d8 (Surr)	*99*		*67 - 134*

Lab Sample ID: LCSD 180-400746/4
Matrix: Sediment
Analysis Batch: 400746

Client Sample ID: Lab Control Sample Dup
Prep Type: Total/NA

Analyte	Spike Added	LCSD Result	LCSD Qualifier	Unit	D	%Rec	%Rec Limits	RPD	RPD Limit
1,1,1-Trichloroethane	40.0	40.3		ug/Kg		101	72 - 134	7	20
1,1,2,2-Tetrachloroethane	40.0	37.3		ug/Kg		93	36 - 170	5	23
1,1,2-Trichloro-1,2,2-trifluoroethane	40.0	43.2		ug/Kg		108	59 - 135	6	28
1,1,2-Trichloroethane	40.0	36.7		ug/Kg		92	66 - 128	3	21
1,1-Dichloroethane	40.0	41.9		ug/Kg		105	73 - 124	5	20
1,1-Dichloroethene	40.0	41.6		ug/Kg		104	55 - 136	7	21
1,2-Dibromo-3-Chloropropane	40.0	36.1		ug/Kg		90	30 - 163	4	34
1,2-Dichlorobenzene	40.0	39.5		ug/Kg		99	76 - 120	6	20
1,2-Dichloroethane	40.0	36.0		ug/Kg		90	64 - 140	7	20
1,2-Dichloropropane	40.0	38.4		ug/Kg		96	77 - 119	10	20
1,2,4-Trichlorobenzene	40.0	34.9		ug/Kg		87	22 - 170	7	29
1,3-Dichlorobenzene	40.0	40.8		ug/Kg		102	77 - 121	7	20
1,4-Dichlorobenzene	40.0	40.8		ug/Kg		102	79 - 120	4	20
2-Butanone (MEK)	40.0	32.8		ug/Kg		82	39 - 157	12	33
2-Hexanone	40.0	34.3		ug/Kg		86	42 - 152	11	30
4-Methyl-2-pentanone (MIBK)	40.0	33.9		ug/Kg		85	51 - 147	1	27
Acetone	40.0	29.6		ug/Kg		74	23 - 170	16	35
Benzene	40.0	42.9		ug/Kg		107	77 - 120	6	20
Bromoform	40.0	28.0		ug/Kg		70	37 - 147	1	23
Bromomethane	40.0	31.3		ug/Kg		78	47 - 149	2	25
Carbon disulfide	40.0	42.9		ug/Kg		107	40 - 156	6	25
Carbon tetrachloride	40.0	39.7		ug/Kg		99	73 - 130	9	21
Chlorobenzene	40.0	40.2		ug/Kg		100	79 - 122	7	20
Chlorodibromomethane	40.0	32.8		ug/Kg		82	60 - 134	9	40

Method: EPA 8260D - Volatile Organic Compounds by GC/MS (Continued)

Lab Sample ID: LCSD 180-400746/4
Matrix: Sediment
Analysis Batch: 400746

Client Sample ID: Lab Control Sample Dup
Prep Type: Total/NA

Analyte	Spike Added	LCSD Result	LCSD Qualifier	Unit	D	%Rec	%Rec Limits	RPD	RPD Limit
Chloroform	40.0	38.5		ug/Kg		96	73 - 126	10	20
Chloromethane	40.0	36.0		ug/Kg		90	46 - 151	10	33
Chloroethane	40.0	33.6		ug/Kg		84	37 - 159	13	25
cis-1,2-Dichloroethene	40.0	38.8		ug/Kg		97	77 - 118	9	20
cis-1,3-Dichloropropene	40.0	38.3		ug/Kg		96	73 - 127	8	20
Dichlorobromomethane	40.0	36.6		ug/Kg		91	75 - 123	10	20
Dichlorodifluoromethane	40.0	34.0		ug/Kg		85	26 - 149	18	24
Ethylbenzene	40.0	40.9		ug/Kg		102	79 - 119	7	20
1,2-Dibromoethane	40.0	35.8		ug/Kg		90	59 - 137	1	20
Cyclohexane	40.0	41.9		ug/Kg		105	63 - 143	8	25
Isopropylbenzene	40.0	43.1		ug/Kg		108	70 - 125	7	21
Methyl acetate	80.0	75.2		ug/Kg		94	20 - 170	9	33
Methyl tert-butyl ether	40.0	37.2		ug/Kg		93	58 - 132	6	24
Methylcyclohexane	40.0	44.7		ug/Kg		112	70 - 125	9	22
Methylene Chloride	40.0	40.4		ug/Kg		101	67 - 131	7	32
m-Xylene & p-Xylene	40.0	40.8		ug/Kg		102	77 - 120	8	20
o-Xylene	40.0	38.7		ug/Kg		97	78 - 118	10	20
Styrene	40.0	39.0		ug/Kg		97	80 - 120	7	20
Tetrachloroethene	40.0	38.6		ug/Kg		96	71 - 121	8	21
Toluene	40.0	43.5		ug/Kg		109	76 - 120	5	20
trans-1,2-Dichloroethene	40.0	41.4		ug/Kg		103	75 - 122	6	20
trans-1,3-Dichloropropene	40.0	37.9		ug/Kg		95	68 - 133	7	20
Trichloroethene	40.0	38.3		ug/Kg		96	69 - 118	8	20
Trichlorofluoromethane	40.0	36.0		ug/Kg		90	32 - 149	9	39
Vinyl chloride	40.0	34.3		ug/Kg		86	64 - 134	12	23
Xylenes, Total	80.0	79.5		ug/Kg		99	78 - 118	9	20

Surrogate	*LCSD %Recovery*	*LCSD Qualifier*	*Limits*
1,2-Dichloroethane-d4 (Surr)	*90*		*73 - 135*
4-Bromofluorobenzene (Surr)	*93*		*60 - 124*
Dibromofluoromethane (Surr)	*90*		*69 - 126*
Toluene-d8 (Surr)	*101*		*67 - 134*

Method: 8270E - Semivolatile Organic Compounds (GC/MS)

Lab Sample ID: MB 310-355673/1-A
Matrix: Solid
Analysis Batch: 356096

Client Sample ID: Method Blank
Prep Type: Total/NA
Prep Batch: 355673

Analyte	MB Result	MB Qualifier	RL	MDL	Unit	D	Prepared	Analyzed	Dil Fac
Alachlor	ND		190	37	ug/Kg		06/08/22 12:12	06/13/22 22:20	1
Simazine	ND		190	54	ug/Kg		06/08/22 12:12	06/13/22 22:20	1

Lab Sample ID: LCS 310-355673/2-A
Matrix: Solid
Analysis Batch: 356096

Client Sample ID: Lab Control Sample
Prep Type: Total/NA
Prep Batch: 355673

Analyte	Spike Added	LCS Result	LCS Qualifier	Unit	D	%Rec	%Rec Limits
Alachlor	512	412		ug/Kg		81	28 - 110

Method: 8270E - Semivolatile Organic Compounds (GC/MS) (Continued)

Lab Sample ID: LCS 310-355673/2-A — **Client Sample ID: Lab Control Sample**
Matrix: Solid — **Prep Type: Total/NA**
Analysis Batch: 356096 — **Prep Batch: 355673**

Analyte	Spike Added	LCS Result	LCS Qualifier	Unit	D	%Rec	%Rec Limits
Simazine	512	379		ug/Kg		74	21 - 110

Lab Sample ID: 180-138845-5 MS — **Client Sample ID: SOUTH-1**
Matrix: Solid — **Prep Type: Total/NA**
Analysis Batch: 356096 — **Prep Batch: 355673**

Analyte	Sample Result	Sample Qualifier	Spike Added	MS Result	MS Qualifier	Unit	D	%Rec	%Rec Limits
Alachlor	ND		1360	1160	J	ug/Kg	☼	85	24 - 110
Simazine	ND		1360	930	J	ug/Kg	☼	68	13 - 110

Lab Sample ID: 180-138845-5 MSD — **Client Sample ID: SOUTH-1**
Matrix: Solid — **Prep Type: Total/NA**
Analysis Batch: 356096 — **Prep Batch: 355673**

Analyte	Sample Result	Sample Qualifier	Spike Added	MSD Result	MSD Qualifier	Unit	D	%Rec	%Rec Limits	RPD	RPD Limit
Alachlor	ND		1360	1330	J	ug/Kg	☼	97	24 - 110	13	40
Simazine	ND		1360	1240	J	ug/Kg	☼	91	13 - 110	29	40

Method: EPA 8270E LL - Semivolatile Organic Compounds (GC/MS)

Lab Sample ID: MB 180-401048/1-A — **Client Sample ID: Method Blank**
Matrix: Sediment — **Prep Type: Total/NA**
Analysis Batch: 401286 — **Prep Batch: 401048**

Analyte	MB Result	MB Qualifier	RL	MDL	Unit	D	Prepared	Analyzed	Dil Fac
Anthracene	ND		3.4	0.87	ug/Kg		06/06/22 22:33	06/08/22 14:44	1
Benzo[a]anthracene	ND		3.4	1.5	ug/Kg		06/06/22 22:33	06/08/22 14:44	1
Benzo[b]fluoranthene	ND		3.4	0.82	ug/Kg		06/06/22 22:33	06/08/22 14:44	1
Benzo[k]fluoranthene	ND		3.4	1.0	ug/Kg		06/06/22 22:33	06/08/22 14:44	1
Benzo[g,h,i]perylene	ND		3.4	0.72	ug/Kg		06/06/22 22:33	06/08/22 14:44	1
Benzo[a]pyrene	ND		3.4	1.4	ug/Kg		06/06/22 22:33	06/08/22 14:44	1
Chrysene	ND		3.4	1.9	ug/Kg		06/06/22 22:33	06/08/22 14:44	1
Dibenz(a,h)anthracene	ND		3.4	2.1	ug/Kg		06/06/22 22:33	06/08/22 14:44	1
Fluoranthene	ND		3.4	0.88	ug/Kg		06/06/22 22:33	06/08/22 14:44	1
Fluorene	ND		3.4	0.66	ug/Kg		06/06/22 22:33	06/08/22 14:44	1
Indeno[1,2,3-cd]pyrene	ND		3.4	1.7	ug/Kg		06/06/22 22:33	06/08/22 14:44	1
Phenanthrene	ND		3.4	0.90	ug/Kg		06/06/22 22:33	06/08/22 14:44	1
1,4-Dioxane	ND		33	5.2	ug/Kg		06/06/22 22:33	06/08/22 14:44	1
Pyrene	ND		3.4	0.79	ug/Kg		06/06/22 22:33	06/08/22 14:44	1
Acenaphthene	ND		3.4	0.96	ug/Kg		06/06/22 22:33	06/08/22 14:44	1
Acenaphthylene	ND		3.4	0.73	ug/Kg		06/06/22 22:33	06/08/22 14:44	1
Naphthalene	ND		3.4	0.65	ug/Kg		06/06/22 22:33	06/08/22 14:44	1
Atrazine	ND		34	7.3	ug/Kg		06/06/22 22:33	06/08/22 14:44	1

Surrogate	*MB %Recovery*	*MB Qualifier*	*Limits*	*Prepared*	*Analyzed*	*Dil Fac*
Nitrobenzene-d5 (Surr)	*64*		*34 - 109*	*06/06/22 22:33*	*06/08/22 14:44*	*1*
2-Fluorobiphenyl	*65*		*35 - 105*	*06/06/22 22:33*	*06/08/22 14:44*	*1*
Terphenyl-d14 (Surr)	*66*		*20 - 117*	*06/06/22 22:33*	*06/08/22 14:44*	*1*

Method: EPA 8270E LL - Semivolatile Organic Compounds (GC/MS) (Continued)

Lab Sample ID: LCS 180-401048/2-A
Matrix: Sediment
Analysis Batch: 401286

Client Sample ID: Lab Control Sample
Prep Type: Total/NA
Prep Batch: 401048

Analyte	Spike Added	LCS Result	LCS Qualifier	Unit	D	%Rec	%Rec Limits
Anthracene	333	215		ug/Kg		64	47 - 100
Benzo[a]anthracene	333	221		ug/Kg		66	47 - 100
Benzo[b]fluoranthene	333	260		ug/Kg		78	44 - 100
Benzo[k]fluoranthene	333	220		ug/Kg		66	43 - 100
Benzo[g,h,i]perylene	333	192		ug/Kg		58	45 - 103
Benzo[a]pyrene	333	222		ug/Kg		67	45 - 101
Chrysene	333	203		ug/Kg		61	44 - 100
Dibenz(a,h)anthracene	333	210		ug/Kg		63	46 - 107
Fluoranthene	333	194		ug/Kg		58	49 - 102
Fluorene	333	202		ug/Kg		61	46 - 100
Indeno[1,2,3-cd]pyrene	333	208		ug/Kg		62	48 - 104
Phenanthrene	333	209		ug/Kg		63	46 - 100
1,4-Dioxane	333	235		ug/Kg		70	10 - 133
Pyrene	333	254		ug/Kg		76	44 - 102
Acenaphthene	333	216		ug/Kg		65	41 - 100
Acenaphthylene	333	210		ug/Kg		63	45 - 100
Naphthalene	333	195		ug/Kg		59	43 - 100
Atrazine	333	202		ug/Kg		61	46 - 102

Surrogate	*LCS %Recovery*	*LCS Qualifier*	*Limits*
Nitrobenzene-d5 (Surr)	*58*		*34 - 109*
2-Fluorobiphenyl	*60*		*35 - 105*
Terphenyl-d14 (Surr)	*74*		*20 - 117*

Method: CT ETPH - Connecticut - Extractable Total petroleum Hydrocarbons (GC)

Lab Sample ID: MB 410-263669/1-A
Matrix: Solid
Analysis Batch: 264378

Client Sample ID: Method Blank
Prep Type: Total/NA
Prep Batch: 263669

Analyte	MB Result	MB Qualifier	RL	MDL	Unit	D	Prepared	Analyzed	Dil Fac
C9-C36	ND		6.0	3.0	mg/Kg		06/09/22 08:35	06/10/22 17:13	1

Surrogate	*MB %Recovery*	*MB Qualifier*	*Limits*	*Prepared*	*Analyzed*	*Dil Fac*
o- terphenyl (Surr)	*90*		*50 - 150*	*06/09/22 08:35*	*06/10/22 17:13*	*1*

Lab Sample ID: LCS 410-263669/2-A
Matrix: Solid
Analysis Batch: 264378

Client Sample ID: Lab Control Sample
Prep Type: Total/NA
Prep Batch: 263669

Analyte	Spike Added	LCS Result	LCS Qualifier	Unit	D	%Rec	%Rec Limits
C9-C36	5.00	5.47	J	mg/Kg		109	60 - 120

Surrogate	*LCS %Recovery*	*LCS Qualifier*	*Limits*
o- terphenyl (Surr)	*91*		*50 - 150*

Method: CT ETPH - Connecticut - Extractable Total petroleum Hydrocarbons (GC) (Continued)

Lab Sample ID: 180-138845-8 MS — **Client Sample ID: SOUTH-23**
Matrix: Solid — **Prep Type: Total/NA**
Analysis Batch: 264378 — **Prep Batch: 263669**

Analyte	Sample Result	Sample Qualifier	Spike Added	MS Result	MS Qualifier	Unit	D	%Rec	%Rec Limits
C9-C36	46	F2	9.51	64.3	4	mg/Kg	☼	192	50 - 150

Surrogate	*MS %Recovery*	*MS Qualifier*	*Limits*
o- terphenyl (Surr)	*67*		*50 - 150*

Lab Sample ID: 180-138845-8 MSD — **Client Sample ID: SOUTH-23**
Matrix: Solid — **Prep Type: Total/NA**
Analysis Batch: 264378 — **Prep Batch: 263669**

Analyte	Sample Result	Sample Qualifier	Spike Added	MSD Result	MSD Qualifier	Unit	D	%Rec	%Rec Limits	RPD	RPD Limit
C9-C36	46	F2	9.44	45.7	4 F2	mg/Kg	☼	-4	50 - 150	34	30

Surrogate	*MSD %Recovery*	*MSD Qualifier*	*Limits*
o- terphenyl (Surr)	*76*		*50 - 150*

Lab Sample ID: MB 410-270482/1-A — **Client Sample ID: Method Blank**
Matrix: Solid — **Prep Type: Total/NA**
Analysis Batch: 270785 — **Prep Batch: 270482**

Analyte	MB Result	MB Qualifier	RL	MDL	Unit	D	Prepared	Analyzed	Dil Fac
C9-C36	ND		6.0	3.0	mg/Kg		06/28/22 19:45	06/29/22 16:09	1

Surrogate	*MB %Recovery*	*MB Qualifier*	*Limits*	*Prepared*	*Analyzed*	*Dil Fac*
o- terphenyl (Surr)	*101*		*50 - 150*	*06/28/22 19:45*	*06/29/22 16:09*	*1*

Lab Sample ID: LCS 410-270482/2-A — **Client Sample ID: Lab Control Sample**
Matrix: Solid — **Prep Type: Total/NA**
Analysis Batch: 270785 — **Prep Batch: 270482**

Analyte	Spike Added	LCS Result	LCS Qualifier	Unit	D	%Rec	%Rec Limits
C9-C36	5.00	5.35	J	mg/Kg		107	60 - 120

Surrogate	*LCS %Recovery*	*LCS Qualifier*	*Limits*
o- terphenyl (Surr)	*101*		*50 - 150*

Method: CT ETPH - Connecticut - Extractable Total petroleum Hydrocarbons (GC) - RE

Lab Sample ID: 180-138845-7 MS — **Client Sample ID: SOUTH-3**
Matrix: Solid — **Prep Type: Total/NA**
Analysis Batch: 270785 — **Prep Batch: 270482**

Analyte	Sample Result	Sample Qualifier	Spike Added	MS Result	MS Qualifier	Unit	D	%Rec	%Rec Limits
C9-C36 - RE	29	H F1 F2	10.1	82.3	F1	mg/Kg	☼	523	50 - 150

Surrogate	*MS %Recovery*	*MS Qualifier*	*Limits*
o- terphenyl (Surr) - RE	*54*		*50 - 150*

Method: CT ETPH - Connecticut - Extractable Total petroleum Hydrocarbons (GC) - RE (Continued)

Lab Sample ID: 180-138845-7 MSD
Matrix: Solid
Analysis Batch: 270785

Client Sample ID: SOUTH-3
Prep Type: Total/NA
Prep Batch: 270482

Analyte	Sample Result	Sample Qualifier	Spike Added	MSD Result	MSD Qualifier	Unit	D	%Rec	%Rec Limits	RPD	RPD Limit
C9-C36 - RE	29	H F1 F2	10.1	53.4	F1 F2	mg/Kg	☼	237	50 - 150	43	30

Surrogate	*MSD %Recovery*	*MSD Qualifier*	*Limits*
o- terphenyl (Surr) - RE	*70*		*50 - 150*

Method: EPA 8081B LL - Organochlorine Pesticides (GC)

Lab Sample ID: MB 180-400999/1-B
Matrix: Sediment
Analysis Batch: 402980

Client Sample ID: Method Blank
Prep Type: Total/NA
Prep Batch: 400999

Analyte	MB Result	MB Qualifier	RL	MDL	Unit	D	Prepared	Analyzed	Dil Fac
Aldrin	ND		0.042	0.013	ug/Kg		06/06/22 11:12	06/23/22 18:25	1
alpha-BHC	ND		0.042	0.010	ug/Kg		06/06/22 11:12	06/23/22 18:25	1
beta-BHC	ND		0.042	0.011	ug/Kg		06/06/22 11:12	06/23/22 18:25	1
delta-BHC	ND		0.042	0.013	ug/Kg		06/06/22 11:12	06/23/22 18:25	1
gamma-BHC (Lindane)	ND		0.042	0.011	ug/Kg		06/06/22 11:12	06/23/22 18:25	1
cis-Chlordane	ND		0.042	0.010	ug/Kg		06/06/22 11:12	06/23/22 18:25	1
trans-Chlordane	ND		0.042	0.0097	ug/Kg		06/06/22 11:12	06/23/22 18:25	1
4,4'-DDD	ND		0.042	0.0088	ug/Kg		06/06/22 11:12	06/23/22 18:25	1
4,4'-DDE	ND		0.042	0.0085	ug/Kg		06/06/22 11:12	06/23/22 18:25	1
4,4'-DDT	ND		0.042	0.030	ug/Kg		06/06/22 11:12	06/23/22 18:25	1
Dieldrin	ND		0.042	0.010	ug/Kg		06/06/22 11:12	06/23/22 18:25	1
Endosulfan I	ND		0.042	0.011	ug/Kg		06/06/22 11:12	06/23/22 18:25	1
Endosulfan II	ND		0.042	0.0092	ug/Kg		06/06/22 11:12	06/23/22 18:25	1
Endosulfan sulfate	ND		0.042	0.019	ug/Kg		06/06/22 11:12	06/23/22 18:25	1
Endrin	ND		0.042	0.0078	ug/Kg		06/06/22 11:12	06/23/22 18:25	1
Endrin aldehyde	ND		0.042	0.015	ug/Kg		06/06/22 11:12	06/23/22 18:25	1
Endrin ketone	ND		0.042	0.0058	ug/Kg		06/06/22 11:12	06/23/22 18:25	1
Heptachlor	ND		0.042	0.013	ug/Kg		06/06/22 11:12	06/23/22 18:25	1
Heptachlor epoxide	ND		0.042	0.011	ug/Kg		06/06/22 11:12	06/23/22 18:25	1
Methoxychlor	ND		0.042	0.016	ug/Kg		06/06/22 11:12	06/23/22 18:25	1
Toxaphene	ND		1.7	1.1	ug/Kg		06/06/22 11:12	06/23/22 18:25	1

Surrogate	*MB %Recovery*	*MB Qualifier*	*Limits*	*Prepared*	*Analyzed*	*Dil Fac*
Tetrachloro-m-xylene (Surr)	*49*		*10 - 105*	*06/06/22 11:12*	*06/23/22 18:25*	*1*
Tetrachloro-m-xylene (Surr)	*62*		*10 - 105*	*06/06/22 11:12*	*06/23/22 18:25*	*1*
DCB Decachlorobiphenyl (Surr)	*74*		*25 - 107*	*06/06/22 11:12*	*06/23/22 18:25*	*1*
DCB Decachlorobiphenyl (Surr)	*84*		*25 - 107*	*06/06/22 11:12*	*06/23/22 18:25*	*1*

Lab Sample ID: LCS 180-400999/2-B
Matrix: Sediment
Analysis Batch: 402980

Client Sample ID: Lab Control Sample
Prep Type: Total/NA
Prep Batch: 400999

Analyte	Spike Added	LCS Result	LCS Qualifier	Unit	D	%Rec	%Rec Limits
Aldrin	1.67	1.06		ug/Kg		64	25 - 139
alpha-BHC	1.67	1.02		ug/Kg		61	30 - 131
beta-BHC	1.67	1.00		ug/Kg		60	26 - 128

Method: EPA 8081B LL - Organochlorine Pesticides (GC) (Continued)

Lab Sample ID: LCS 180-400999/2-B
Matrix: Sediment
Analysis Batch: 402980

Client Sample ID: Lab Control Sample
Prep Type: Total/NA
Prep Batch: 400999

Analyte	Spike Added	LCS Result	LCS Qualifier	Unit	D	%Rec	%Rec Limits
delta-BHC	1.67	1.08		ug/Kg		65	20 - 133
gamma-BHC (Lindane)	1.67	1.04		ug/Kg		62	31 - 134
cis-Chlordane	1.67	1.07		ug/Kg		64	25 - 137
trans-Chlordane	1.67	1.09		ug/Kg		65	31 - 131
4,4'-DDD	1.67	1.21		ug/Kg		73	32 - 135
4,4'-DDE	1.67	1.12		ug/Kg		67	28 - 128
4,4'-DDT	1.67	1.24		ug/Kg		74	28 - 121
Dieldrin	1.67	1.08		ug/Kg		65	39 - 124
Endosulfan I	1.67	1.12		ug/Kg		67	24 - 141
Endosulfan II	1.67	1.14		ug/Kg		69	38 - 125
Endosulfan sulfate	1.67	1.09		ug/Kg		65	23 - 130
Endrin	1.67	1.13		ug/Kg		68	32 - 131
Endrin aldehyde	1.67	0.976		ug/Kg		59	27 - 124
Endrin ketone	1.67	1.07		ug/Kg		64	46 - 128
Heptachlor	1.67	1.29		ug/Kg		77	24 - 146
Heptachlor epoxide	1.67	1.09		ug/Kg		66	25 - 142
Methoxychlor	1.67	1.22		ug/Kg		73	31 - 136

Surrogate	*LCS %Recovery*	*LCS Qualifier*	*Limits*
Tetrachloro-m-xylene (Surr)	*43*		*10 - 105*
Tetrachloro-m-xylene (Surr)	*56*		*10 - 105*
DCB Decachlorobiphenyl (Surr)	*61*		*25 - 107*
DCB Decachlorobiphenyl (Surr)	*72*		*25 - 107*

Method: EPA 8082A - Polychlorinated Biphenyls (PCBs) (GC)

Lab Sample ID: MB 180-400877/1-C
Matrix: Sediment
Analysis Batch: 401661

Client Sample ID: Method Blank
Prep Type: Total/NA
Prep Batch: 400877

Analyte	MB Result	MB Qualifier	RL	MDL	Unit	D	Prepared	Analyzed	Dil Fac
PCB-1016	ND		0.42	0.14	ug/Kg		06/03/22 17:18	06/12/22 03:24	1
PCB-1221	ND		0.42	0.15	ug/Kg		06/03/22 17:18	06/12/22 03:24	1
PCB-1232	ND		0.42	0.10	ug/Kg		06/03/22 17:18	06/12/22 03:24	1
PCB-1242	ND		0.42	0.061	ug/Kg		06/03/22 17:18	06/12/22 03:24	1
PCB-1248	ND		0.42	0.10	ug/Kg		06/03/22 17:18	06/12/22 03:24	1
PCB-1254	ND		0.42	0.13	ug/Kg		06/03/22 17:18	06/12/22 03:24	1
PCB-1260	ND		0.42	0.12	ug/Kg		06/03/22 17:18	06/12/22 03:24	1

Surrogate	*MB %Recovery*	*MB Qualifier*	*Limits*	*Prepared*	*Analyzed*	*Dil Fac*
DCB Decachlorobiphenyl (Surr)	*92*		*26 - 170*	*06/03/22 17:18*	*06/12/22 03:24*	*1*
DCB Decachlorobiphenyl (Surr)	*93*		*26 - 170*	*06/03/22 17:18*	*06/12/22 03:24*	*1*
Tetrachloro-m-xylene (Surr)	*105*		*33 - 126*	*06/03/22 17:18*	*06/12/22 03:24*	*1*
Tetrachloro-m-xylene (Surr)	*99*		*33 - 126*	*06/03/22 17:18*	*06/12/22 03:24*	*1*

Method: EPA 8082A - Polychlorinated Biphenyls (PCBs) (GC) (Continued)

Lab Sample ID: LCS 180-400877/2-C
Matrix: Sediment
Analysis Batch: 401661

Client Sample ID: Lab Control Sample
Prep Type: Total/NA
Prep Batch: 400877

Analyte	Spike Added	LCS Result	LCS Qualifier	Unit	D	%Rec	%Rec Limits
PCB-1016	33.3	29.8		ug/Kg		89	32 - 126
PCB-1260	33.3	33.1		ug/Kg		99	40 - 121

Surrogate	*LCS %Recovery*	*LCS Qualifier*	*Limits*
DCB Decachlorobiphenyl (Surr)	*90*		*26 - 170*
DCB Decachlorobiphenyl (Surr)	*106*		*26 - 170*
Tetrachloro-m-xylene (Surr)	*102*		*33 - 126*
Tetrachloro-m-xylene (Surr)	*98*		*33 - 126*

Method: EPA 8151A - Herbicides (GC)

Lab Sample ID: MB 180-401378/1-A
Matrix: Sediment
Analysis Batch: 401659

Client Sample ID: Method Blank
Prep Type: Total/NA
Prep Batch: 401378

Analyte	MB Result	MB Qualifier	RL	MDL	Unit	D	Prepared	Analyzed	Dil Fac
2,4-D	ND		80	59	ug/Kg		06/09/22 03:45	06/11/22 13:18	1
2,4,5-T	ND		20	11	ug/Kg		06/09/22 03:45	06/11/22 13:18	1
Silvex (2,4,5-TP)	ND		20	11	ug/Kg		06/09/22 03:45	06/11/22 13:18	1

Surrogate	*MB %Recovery*	*MB Qualifier*	*Limits*	*Prepared*	*Analyzed*	*Dil Fac*
2,4-Dichlorophenylacetic acid	*90*		*48 - 127*	*06/09/22 03:45*	*06/11/22 13:18*	*1*
2,4-Dichlorophenylacetic acid	*102*		*48 - 127*	*06/09/22 03:45*	*06/11/22 13:18*	*1*

Lab Sample ID: LCS 180-401378/2-A
Matrix: Sediment
Analysis Batch: 401659

Client Sample ID: Lab Control Sample
Prep Type: Total/NA
Prep Batch: 401378

Analyte	Spike Added	LCS Result	LCS Qualifier	Unit	D	%Rec	%Rec Limits
2,4-D	400	176		ug/Kg		44	23 - 139
2,4,5-T	100	48.1		ug/Kg		48	30 - 134
Silvex (2,4,5-TP)	100	55.6		ug/Kg		56	33 - 140

Surrogate	*LCS %Recovery*	*LCS Qualifier*	*Limits*
2,4-Dichlorophenylacetic acid	*113*		*48 - 127*
2,4-Dichlorophenylacetic acid	*126*		*48 - 127*

Lab Sample ID: 180-138845-1 MS
Matrix: Sediment
Analysis Batch: 401659

Client Sample ID: SOUTH-1
Prep Type: Total/NA
Prep Batch: 401378

Analyte	Sample Result	Sample Qualifier	Spike Added	MS Result	MS Qualifier	Unit	D	%Rec	%Rec Limits
2,4-D	ND		1030	487		ug/Kg	☼	47	23 - 139
2,4,5-T	ND		259	134		ug/Kg	☼	52	30 - 134
Silvex (2,4,5-TP)	ND		259	149		ug/Kg	☼	58	33 - 140

Method: EPA 8151A - Herbicides (GC) (Continued)

Lab Sample ID: 180-138845-1 MS
Matrix: Sediment
Analysis Batch: 401659

Client Sample ID: SOUTH-1
Prep Type: Total/NA
Prep Batch: 401378

Surrogate	MS %Recovery	MS Qualifier	Limits
2,4-Dichlorophenylacetic acid	112		48 - 127
2,4-Dichlorophenylacetic acid	136	S1+	48 - 127

Lab Sample ID: 180-138845-1 MSD
Matrix: Sediment
Analysis Batch: 401659

Client Sample ID: SOUTH-1
Prep Type: Total/NA
Prep Batch: 401378

Analyte	Sample Result	Sample Qualifier	Spike Added	MSD Result	MSD Qualifier	Unit	D	%Rec	%Rec Limits	RPD	RPD Limit
2,4-D	ND		1030	481		ug/Kg	☼	46	23 - 139	1	40
2,4,5-T	ND		259	131		ug/Kg	☼	51	30 - 134	2	40
Silvex (2,4,5-TP)	ND		259	143		ug/Kg	☼	55	33 - 140	4	40

Surrogate	MSD %Recovery	MSD Qualifier	Limits
2,4-Dichlorophenylacetic acid	111		48 - 127
2,4-Dichlorophenylacetic acid	136	S1+	48 - 127

Method: 8318A - The Determination of Carbamate in Soils and Water by HPLC

Lab Sample ID: MB 410-263589/1-A
Matrix: Solid
Analysis Batch: 264037

Client Sample ID: Method Blank
Prep Type: Total/NA
Prep Batch: 263589

Analyte	MB Result	MB Qualifier	RL	MDL	Unit	D	Prepared	Analyzed	Dil Fac
Aldicarb	ND		50	10	ug/Kg		06/08/22 20:20	06/10/22 23:43	20

Surrogate	MB %Recovery	MB Qualifier	Limits	Prepared	Analyzed	Dil Fac
4-Bromo-3,5-Dimethylphenyl-N-methylcarbamate	61		27 - 131	06/08/22 20:20	06/10/22 23:43	20

Lab Sample ID: LCS 410-263589/2-A
Matrix: Solid
Analysis Batch: 264037

Client Sample ID: Lab Control Sample
Prep Type: Total/NA
Prep Batch: 263589

Analyte			Spike Added	LCS Result	LCS Qualifier	Unit	D	%Rec	%Rec Limits		
Aldicarb			502	476		ug/Kg		95	63 - 154		

Surrogate	LCS %Recovery	LCS Qualifier	Limits
4-Bromo-3,5-Dimethylphenyl-N-methylcarbamate	63		27 - 131

Lab Sample ID: 180-138845-5 MS
Matrix: Solid
Analysis Batch: 264037

Client Sample ID: SOUTH-1
Prep Type: Total/NA
Prep Batch: 263589

Analyte	Sample Result	Sample Qualifier	Spike Added	MS Result	MS Qualifier	Unit	D	%Rec	%Rec Limits		
Aldicarb	ND	H	1290	1260		ug/Kg	☼	98	63 - 154		

Method: 8318A - The Determination of Carbamate in Soils and Water by HPLC (Continued)

Lab Sample ID: 180-138845-5 MS
Matrix: Solid
Analysis Batch: 264037

Client Sample ID: SOUTH-1
Prep Type: Total/NA
Prep Batch: 263589

Surrogate	*MS %Recovery*	*MS Qualifier*	*Limits*
4-Bromo-3,5-Dimethylphenyl-N-methylcarbamate	*66*		*27 - 131*

Lab Sample ID: 180-138845-5 MSD
Matrix: Solid
Analysis Batch: 264037

Client Sample ID: SOUTH-1
Prep Type: Total/NA
Prep Batch: 263589

Analyte	Sample Result	Sample Qualifier	Spike Added	MSD Result	MSD Qualifier	Unit	D	%Rec	%Rec Limits	RPD	RPD Limit
Aldicarb	ND	H	1290	1130		ug/Kg	☼	87	63 - 154	11	50

Surrogate	*MSD %Recovery*	*MSD Qualifier*	*Limits*
4-Bromo-3,5-Dimethylphenyl-N-methylcarbamate	*68*		*27 - 131*

Method: EPA 9056A - Anions, Ion Chromatography

Lab Sample ID: MB 180-401417/2-A
Matrix: Sediment
Analysis Batch: 401559

Client Sample ID: Method Blank
Prep Type: Soluble

Analyte	MB Result	MB Qualifier	RL	MDL	Unit	D	Prepared	Analyzed	Dil Fac
Chloride	ND		10	3.9	mg/Kg			06/11/22 05:22	1

Lab Sample ID: LCS 180-401417/1-A
Matrix: Sediment
Analysis Batch: 401559

Client Sample ID: Lab Control Sample
Prep Type: Soluble

Analyte	Spike Added	LCS Result	LCS Qualifier	Unit	D	%Rec	%Rec Limits
Chloride	249	254		mg/Kg		102	80 - 120

Lab Sample ID: MB 180-401417/2-A
Matrix: Sediment
Analysis Batch: 401671

Client Sample ID: Method Blank
Prep Type: Soluble

Analyte	MB Result	MB Qualifier	RL	MDL	Unit	D	Prepared	Analyzed	Dil Fac
Chloride	ND		10	3.9	mg/Kg			06/12/22 11:27	1

Lab Sample ID: LCS 180-401417/1-A
Matrix: Sediment
Analysis Batch: 401671

Client Sample ID: Lab Control Sample
Prep Type: Soluble

Analyte	Spike Added	LCS Result	LCS Qualifier	Unit	D	%Rec	%Rec Limits
Chloride	249	249		mg/Kg		100	80 - 120

Method: 1613B - Dioxins and Furans (HRGC/HRMS)

Lab Sample ID: MB 410-268668/1-A
Matrix: Solid
Analysis Batch: 269154

Client Sample ID: Method Blank
Prep Type: Total/NA
Prep Batch: 268668

Analyte	MB Result	MB Qualifier	RL	EDL	Unit	D	Prepared	Analyzed	Dil Fac
2,3,7,8-TCDD	ND		1.0	0.010	ng/Kg		06/23/22 12:58	06/24/22 20:50	1

Isotope Dilution	*MB %Recovery*	*MB Qualifier*	*Limits*	*Prepared*	*Analyzed*	*Dil Fac*
13C-2,3,7,8-TCDD	*59*		*25 - 164*	*06/23/22 12:58*	*06/24/22 20:50*	*1*

Lab Sample ID: LCS 410-268668/2-A
Matrix: Solid
Analysis Batch: 269154

Client Sample ID: Lab Control Sample
Prep Type: Total/NA
Prep Batch: 268668

Analyte			Spike Added	LCS Result	LCS Qualifier	Unit	D	%Rec	%Rec Limits		
2,3,7,8-TCDD			20.0	21.5		ng/Kg		107	67 - 158		

Isotope Dilution	*LCS %Recovery*	*LCS Qualifier*	*Limits*
13C-2,3,7,8-TCDD	*76*		*20 - 175*

Method: EPA 6020B - Metals (ICP/MS)

Lab Sample ID: MB 180-400971/1-A
Matrix: Sediment
Analysis Batch: 403244

Client Sample ID: Method Blank
Prep Type: Total/NA
Prep Batch: 400971

Analyte	MB Result	MB Qualifier	RL	MDL	Unit	D	Prepared	Analyzed	Dil Fac
Antimony	ND		0.10	0.053	mg/Kg		06/06/22 09:19	06/24/22 11:39	1
Arsenic	ND		0.050	0.029	mg/Kg		06/06/22 09:19	06/24/22 11:39	1
Barium	ND		0.50	0.31	mg/Kg		06/06/22 09:19	06/24/22 11:39	1
Beryllium	ND		0.050	0.036	mg/Kg		06/06/22 09:19	06/24/22 11:39	1
Cadmium	ND		0.050	0.028	mg/Kg		06/06/22 09:19	06/24/22 11:39	1
Chromium	ND		0.10	0.089	mg/Kg		06/06/22 09:19	06/24/22 11:39	1
Cobalt	ND		0.025	0.018	mg/Kg		06/06/22 09:19	06/24/22 11:39	1
Copper	ND		0.15	0.10	mg/Kg		06/06/22 09:19	06/24/22 11:39	1
Lead	ND		0.050	0.033	mg/Kg		06/06/22 09:19	06/24/22 11:39	1
Nickel	ND		0.050	0.047	mg/Kg		06/06/22 09:19	06/24/22 11:39	1
Selenium	ND		0.25	0.061	mg/Kg		06/06/22 09:19	06/24/22 11:39	1
Silver	ND		0.050	0.014	mg/Kg		06/06/22 09:19	06/24/22 11:39	1
Sodium	ND		25	13	mg/Kg		06/06/22 09:19	06/24/22 11:39	1
Thallium	ND		0.050	0.035	mg/Kg		06/06/22 09:19	06/24/22 11:39	1
Vanadium	ND		0.050	0.047	mg/Kg		06/06/22 09:19	06/24/22 11:39	1

Lab Sample ID: MB 180-400971/1-A
Matrix: Sediment
Analysis Batch: 403449

Client Sample ID: Method Blank
Prep Type: Total/NA
Prep Batch: 400971

Analyte	MB Result	MB Qualifier	RL	MDL	Unit	D	Prepared	Analyzed	Dil Fac
Zinc	ND		0.25	0.24	mg/Kg		06/06/22 09:19	06/25/22 17:41	1

Method: EPA 6020B - Metals (ICP/MS) (Continued)

Lab Sample ID: LCS 180-400971/2-A
Matrix: Sediment
Analysis Batch: 403244

Client Sample ID: Lab Control Sample
Prep Type: Total/NA
Prep Batch: 400971

Analyte	Spike Added	LCS Result	LCS Qualifier	Unit	D	%Rec	%Rec Limits
Antimony	12.5	12.5		mg/Kg		100	80 - 120
Arsenic	50.0	45.4		mg/Kg		91	80 - 120
Barium	50.0	48.1		mg/Kg		96	80 - 120
Beryllium	25.0	25.6		mg/Kg		103	80 - 120
Cadmium	25.0	24.4		mg/Kg		98	80 - 120
Chromium	25.0	24.0		mg/Kg		96	80 - 120
Cobalt	25.0	23.1		mg/Kg		93	80 - 120
Copper	25.0	22.5		mg/Kg		90	80 - 120
Lead	25.0	24.3		mg/Kg		97	80 - 120
Nickel	25.0	23.5		mg/Kg		94	80 - 120
Selenium	50.0	46.9		mg/Kg		94	80 - 120
Silver	12.5	11.8		mg/Kg		94	80 - 120
Sodium	1250	1200		mg/Kg		96	80 - 120
Thallium	50.0	48.9		mg/Kg		98	80 - 120
Vanadium	25.0	23.7		mg/Kg		95	80 - 120

Lab Sample ID: LCS 180-400971/2-A
Matrix: Sediment
Analysis Batch: 403449

Client Sample ID: Lab Control Sample
Prep Type: Total/NA
Prep Batch: 400971

Analyte	Spike Added	LCS Result	LCS Qualifier	Unit	D	%Rec	%Rec Limits
Zinc	12.5	11.2		mg/Kg		89	80 - 120

Lab Sample ID: MB 180-402673/1-A
Matrix: Sediment
Analysis Batch: 403145

Client Sample ID: Method Blank
Prep Type: Total/NA
Prep Batch: 402673

Analyte	MB Result	MB Qualifier	RL	MDL	Unit	D	Prepared	Analyzed	Dil Fac
Lead	ND		0.0010	0.00017	mg/L		06/21/22 08:42	06/23/22 14:05	1

Lab Sample ID: LCS 180-402673/2-A
Matrix: Sediment
Analysis Batch: 403145

Client Sample ID: Lab Control Sample
Prep Type: Total/NA
Prep Batch: 402673

Analyte	Spike Added	LCS Result	LCS Qualifier	Unit	D	%Rec	%Rec Limits
Lead	0.500	0.502		mg/L		100	80 - 120

Lab Sample ID: LB 180-402348/1-D
Matrix: Sediment
Analysis Batch: 403145

Client Sample ID: Method Blank
Prep Type: TCLP
Prep Batch: 402673

Analyte	LB Result	LB Qualifier	RL	MDL	Unit	D	Prepared	Analyzed	Dil Fac
Lead	ND		0.010	0.0017	mg/L		06/21/22 08:42	06/23/22 14:08	1

Lab Sample ID: 180-138845-4 MS
Matrix: Sediment
Analysis Batch: 403145

Client Sample ID: SOUTH-23
Prep Type: TCLP
Prep Batch: 402673

Analyte	Sample Result	Sample Qualifier	Spike Added	MS Result	MS Qualifier	Unit	D	%Rec	%Rec Limits
Lead	0.032		5.00	4.48		mg/L		89	75 - 125

QC Sample Results

Client: ESS Group Inc
Project/Site: City Pier, New London CT

Job ID: 180-138845-1

Method: EPA 6020B - Metals (ICP/MS)

Lab Sample ID: 180-138845-4 MS
Matrix: Sediment
Analysis Batch: 403145

Client Sample ID: SOUTH-23
Prep Type: TCLP
Prep Batch: 402673

Analyte	Sample Result	Sample Qualifier	Spike Added	MS Result	MS Qualifier	Unit	D	%Rec	%Rec Limits		
Lead	0.032		1.00	0.914		mg/L		88	75 - 125		

Lab Sample ID: 180-138845-4 MSD
Matrix: Sediment
Analysis Batch: 403145

Client Sample ID: SOUTH-23
Prep Type: TCLP
Prep Batch: 402673

Analyte	Sample Result	Sample Qualifier	Spike Added	MSD Result	MSD Qualifier	Unit	D	%Rec	%Rec Limits	RPD	RPD Limit
Lead	0.032		5.00	4.70		mg/L		93	75 - 125	5	20

Lab Sample ID: 180-138845-4 MSD
Matrix: Sediment
Analysis Batch: 403145

Client Sample ID: SOUTH-23
Prep Type: TCLP
Prep Batch: 402673

Analyte	Sample Result	Sample Qualifier	Spike Added	MSD Result	MSD Qualifier	Unit	D	%Rec	%Rec Limits	RPD	RPD Limit
Lead	0.032		1.00	0.919		mg/L		89	75 - 125	1	20

Method: EPA 7471B - Mercury (CVAA)

Lab Sample ID: MB 180-401486/1-A
Matrix: Sediment
Analysis Batch: 401629

Client Sample ID: Method Blank
Prep Type: Total/NA
Prep Batch: 401486

Analyte	MB Result	MB Qualifier	RL	MDL	Unit	D	Prepared	Analyzed	Dil Fac
Mercury	ND		0.017	0.011	mg/Kg		06/10/22 08:50	06/10/22 13:36	1

Lab Sample ID: LCS 180-401486/2-A
Matrix: Sediment
Analysis Batch: 401629

Client Sample ID: Lab Control Sample
Prep Type: Total/NA
Prep Batch: 401486

Analyte	Spike Added	LCS Result	LCS Qualifier	Unit	D	%Rec	%Rec Limits		
Mercury	0.208	0.219		mg/Kg		105	80 - 120		

Method: EPA 7196A - Chromium, Hexavalent

Lab Sample ID: MB 180-400835/1-A
Matrix: Sediment
Analysis Batch: 401149

Client Sample ID: Method Blank
Prep Type: Total/NA
Prep Batch: 400835

Analyte	MB Result	MB Qualifier	RL	MDL	Unit	D	Prepared	Analyzed	Dil Fac
Cr (VI)	ND		0.40	0.21	mg/Kg		06/03/22 13:09	06/07/22 13:32	1

Lab Sample ID: LCSI 180-400835/3-A
Matrix: Sediment
Analysis Batch: 401149

Client Sample ID: Lab Control Sample
Prep Type: Total/NA
Prep Batch: 400835

Analyte	Spike Added	LCSI Result	LCSI Qualifier	Unit	D	%Rec	%Rec Limits		
Cr (VI)	708	694		mg/Kg		98	80 - 120		

Method: EPA 7196A - Chromium, Hexavalent (Continued)

Lab Sample ID: LCSS 180-400835/2-A — **Client Sample ID: Lab Control Sample**
Matrix: Sediment — **Prep Type: Total/NA**
Analysis Batch: 401149 — **Prep Batch: 400835**

Analyte	Spike Added	LCSS Result	LCSS Qualifier	Unit	D	%Rec	%Rec Limits
Cr (VI)	20.0	18.0		mg/Kg		90	80 - 120

Method: EPA 9014 - Cyanide

Lab Sample ID: MB 180-401006/4-A — **Client Sample ID: Method Blank**
Matrix: Sediment — **Prep Type: Total/NA**
Analysis Batch: 401078 — **Prep Batch: 401006**

Analyte	MB Result	MB Qualifier	RL	MDL	Unit	D	Prepared	Analyzed	Dil Fac
Cyanide, Total	ND		0.50	0.38	mg/Kg		06/06/22 15:15	06/06/22 18:26	1

Lab Sample ID: HLCS 180-401006/2-A — **Client Sample ID: Lab Control Sample**
Matrix: Sediment — **Prep Type: Total/NA**
Analysis Batch: 401078 — **Prep Batch: 401006**

Analyte	Spike Added	HLCS Result	HLCS Qualifier	Unit	D	%Rec	%Rec Limits
Cyanide, Total	0.250	0.250		mg/Kg		100	90 - 110

Lab Sample ID: LCS 180-401006/3-A — **Client Sample ID: Lab Control Sample**
Matrix: Sediment — **Prep Type: Total/NA**
Analysis Batch: 401078 — **Prep Batch: 401006**

Analyte	Spike Added	LCS Result	LCS Qualifier	Unit	D	%Rec	%Rec Limits
Cyanide, Total	23.1	21.9		mg/Kg		95	25 - 150

Lab Sample ID: LLCS 180-401006/1-A — **Client Sample ID: Lab Control Sample**
Matrix: Sediment — **Prep Type: Total/NA**
Analysis Batch: 401078 — **Prep Batch: 401006**

Analyte	Spike Added	LLCS Result	LLCS Qualifier	Unit	D	%Rec	%Rec Limits
Cyanide, Total	0.0500	0.0468		mg/Kg		94	90 - 110

Lab Sample ID: 180-138845-1 MS — **Client Sample ID: SOUTH-1**
Matrix: Sediment — **Prep Type: Total/NA**
Analysis Batch: 401078 — **Prep Batch: 401006**

Analyte	Sample Result	Sample Qualifier	Spike Added	MS Result	MS Qualifier	Unit	D	%Rec	%Rec Limits
Cyanide, Total	ND	F1	8.92	6.17	F1	mg/Kg	☼	69	75 - 125

Lab Sample ID: 180-138845-1 MSD — **Client Sample ID: SOUTH-1**
Matrix: Sediment — **Prep Type: Total/NA**
Analysis Batch: 401078 — **Prep Batch: 401006**

Analyte	Sample Result	Sample Qualifier	Spike Added	MSD Result	MSD Qualifier	Unit	D	%Rec	%Rec Limits	RPD	RPD Limit
Cyanide, Total	ND	F1	10.1	7.56		mg/Kg	☼	75	75 - 125	20	20

QC Sample Results

Client: ESS Group Inc
Project/Site: City Pier, New London CT

Job ID: 180-138845-1

Method: EPA-Lloyd Kahn - Organic Carbon, Total (TOC)

Lab Sample ID: MB 180-401218/4
Matrix: Sediment
Analysis Batch: 401218

Client Sample ID: Method Blank
Prep Type: Total/NA

Analyte	MB Result	MB Qualifier	RL	MDL	Unit	D	Prepared	Analyzed	Dil Fac
Total Organic Carbon - Duplicates	ND		1000	970	mg/Kg			06/07/22 11:12	1

Lab Sample ID: LCS 180-401218/5
Matrix: Sediment
Analysis Batch: 401218

Client Sample ID: Lab Control Sample
Prep Type: Total/NA

Analyte	Spike Added	LCS Result	LCS Qualifier	Unit	D	%Rec	%Rec Limits
Total Organic Carbon - Duplicates	35300	31100		mg/Kg		88	75 - 125

QC Association Summary

Client: ESS Group Inc
Project/Site: City Pier, New London CT

Job ID: 180-138845-1

GC/MS VOA

Analysis Batch: 400746

Lab Sample ID	Client Sample ID	Prep Type	Matrix	Method	Prep Batch
180-138845-1	SOUTH-1	Total/NA	Sediment	EPA 8260D	400754
180-138845-2	SOUTH-2	Total/NA	Sediment	EPA 8260D	400754
180-138845-3	SOUTH-3	Total/NA	Sediment	EPA 8260D	400754
180-138845-4	SOUTH-23	Total/NA	Sediment	EPA 8260D	400754
MB 180-400746/6	Method Blank	Total/NA	Sediment	EPA 8260D	
LCS 180-400746/3	Lab Control Sample	Total/NA	Sediment	EPA 8260D	
LCSD 180-400746/4	Lab Control Sample Dup	Total/NA	Sediment	EPA 8260D	

Prep Batch: 400754

Lab Sample ID	Client Sample ID	Prep Type	Matrix	Method	Prep Batch
180-138845-1	SOUTH-1	Total/NA	Sediment	5035	
180-138845-2	SOUTH-2	Total/NA	Sediment	5035	
180-138845-3	SOUTH-3	Total/NA	Sediment	5035	
180-138845-4	SOUTH-23	Total/NA	Sediment	5035	

GC/MS Semi VOA

Prep Batch: 355673

Lab Sample ID	Client Sample ID	Prep Type	Matrix	Method	Prep Batch
180-138845-5	SOUTH-1	Total/NA	Solid	3546	
180-138845-6	SOUTH-2	Total/NA	Solid	3546	
180-138845-7	SOUTH-3	Total/NA	Solid	3546	
180-138845-8	SOUTH-23	Total/NA	Solid	3546	
MB 310-355673/1-A	Method Blank	Total/NA	Solid	3546	
LCS 310-355673/2-A	Lab Control Sample	Total/NA	Solid	3546	
180-138845-5 MS	SOUTH-1	Total/NA	Solid	3546	
180-138845-5 MSD	SOUTH-1	Total/NA	Solid	3546	

Analysis Batch: 356096

Lab Sample ID	Client Sample ID	Prep Type	Matrix	Method	Prep Batch
180-138845-5	SOUTH-1	Total/NA	Solid	8270E	355673
180-138845-6	SOUTH-2	Total/NA	Solid	8270E	355673
180-138845-7	SOUTH-3	Total/NA	Solid	8270E	355673
180-138845-8	SOUTH-23	Total/NA	Solid	8270E	355673
MB 310-355673/1-A	Method Blank	Total/NA	Solid	8270E	355673
LCS 310-355673/2-A	Lab Control Sample	Total/NA	Solid	8270E	355673
180-138845-5 MS	SOUTH-1	Total/NA	Solid	8270E	355673
180-138845-5 MSD	SOUTH-1	Total/NA	Solid	8270E	355673

Prep Batch: 401048

Lab Sample ID	Client Sample ID	Prep Type	Matrix	Method	Prep Batch
180-138845-1	SOUTH-1	Total/NA	Sediment	3541	
180-138845-2	SOUTH-2	Total/NA	Sediment	3541	
180-138845-3	SOUTH-3	Total/NA	Sediment	3541	
180-138845-4	SOUTH-23	Total/NA	Sediment	3541	
MB 180-401048/1-A	Method Blank	Total/NA	Sediment	3541	
LCS 180-401048/2-A	Lab Control Sample	Total/NA	Sediment	3541	

Analysis Batch: 401286

Lab Sample ID	Client Sample ID	Prep Type	Matrix	Method	Prep Batch
180-138845-1	SOUTH-1	Total/NA	Sediment	EPA 8270E LL	401048

GC/MS Semi VOA (Continued)

Analysis Batch: 401286 (Continued)

Lab Sample ID	Client Sample ID	Prep Type	Matrix	Method	Prep Batch
180-138845-2	SOUTH-2	Total/NA	Sediment	EPA 8270E LL	401048
180-138845-3	SOUTH-3	Total/NA	Sediment	EPA 8270E LL	401048
180-138845-4	SOUTH-23	Total/NA	Sediment	EPA 8270E LL	401048
MB 180-401048/1-A	Method Blank	Total/NA	Sediment	EPA 8270E LL	401048
LCS 180-401048/2-A	Lab Control Sample	Total/NA	Sediment	EPA 8270E LL	401048

GC Semi VOA

Prep Batch: 263669

Lab Sample ID	Client Sample ID	Prep Type	Matrix	Method	Prep Batch
180-138845-5	SOUTH-1	Total/NA	Solid	3550C	
180-138845-6	SOUTH-2	Total/NA	Solid	3550C	
180-138845-7	SOUTH-3	Total/NA	Solid	3550C	
180-138845-8	SOUTH-23	Total/NA	Solid	3550C	
MB 410-263669/1-A	Method Blank	Total/NA	Solid	3550C	
LCS 410-263669/2-A	Lab Control Sample	Total/NA	Solid	3550C	
180-138845-8 MS	SOUTH-23	Total/NA	Solid	3550C	
180-138845-8 MSD	SOUTH-23	Total/NA	Solid	3550C	

Analysis Batch: 264378

Lab Sample ID	Client Sample ID	Prep Type	Matrix	Method	Prep Batch
180-138845-5	SOUTH-1	Total/NA	Solid	CT ETPH	263669
180-138845-6	SOUTH-2	Total/NA	Solid	CT ETPH	263669
180-138845-7	SOUTH-3	Total/NA	Solid	CT ETPH	263669
180-138845-8	SOUTH-23	Total/NA	Solid	CT ETPH	263669
MB 410-263669/1-A	Method Blank	Total/NA	Solid	CT ETPH	263669
LCS 410-263669/2-A	Lab Control Sample	Total/NA	Solid	CT ETPH	263669
180-138845-8 MS	SOUTH-23	Total/NA	Solid	CT ETPH	263669
180-138845-8 MSD	SOUTH-23	Total/NA	Solid	CT ETPH	263669

Prep Batch: 270482

Lab Sample ID	Client Sample ID	Prep Type	Matrix	Method	Prep Batch
180-138845-7 - RE	SOUTH-3	Total/NA	Solid	3550C	
MB 410-270482/1-A	Method Blank	Total/NA	Solid	3550C	
LCS 410-270482/2-A	Lab Control Sample	Total/NA	Solid	3550C	
180-138845-7 MS - RE	SOUTH-3	Total/NA	Solid	3550C	
180-138845-7 MSD - RE	SOUTH-3	Total/NA	Solid	3550C	

Analysis Batch: 270785

Lab Sample ID	Client Sample ID	Prep Type	Matrix	Method	Prep Batch
180-138845-7 - RE	SOUTH-3	Total/NA	Solid	CT ETPH	270482
MB 410-270482/1-A	Method Blank	Total/NA	Solid	CT ETPH	270482
LCS 410-270482/2-A	Lab Control Sample	Total/NA	Solid	CT ETPH	270482
180-138845-7 MS - RE	SOUTH-3	Total/NA	Solid	CT ETPH	270482
180-138845-7 MSD - RE	SOUTH-3	Total/NA	Solid	CT ETPH	270482

Prep Batch: 400877

Lab Sample ID	Client Sample ID	Prep Type	Matrix	Method	Prep Batch
180-138845-1	SOUTH-1	Total/NA	Sediment	3541	
180-138845-2	SOUTH-2	Total/NA	Sediment	3541	
180-138845-3	SOUTH-3	Total/NA	Sediment	3541	

GC Semi VOA (Continued)

Prep Batch: 400877 (Continued)

Lab Sample ID	Client Sample ID	Prep Type	Matrix	Method	Prep Batch
180-138845-4	SOUTH-23	Total/NA	Sediment	3541	
MB 180-400877/1-C	Method Blank	Total/NA	Sediment	3541	
LCS 180-400877/2-C	Lab Control Sample	Total/NA	Sediment	3541	

Cleanup Batch: 400955

Lab Sample ID	Client Sample ID	Prep Type	Matrix	Method	Prep Batch
180-138845-1	SOUTH-1	Total/NA	Sediment	3665A	400877
180-138845-2	SOUTH-2	Total/NA	Sediment	3665A	400877
180-138845-3	SOUTH-3	Total/NA	Sediment	3665A	400877
180-138845-4	SOUTH-23	Total/NA	Sediment	3665A	400877
MB 180-400877/1-C	Method Blank	Total/NA	Sediment	3665A	400877
LCS 180-400877/2-C	Lab Control Sample	Total/NA	Sediment	3665A	400877

Cleanup Batch: 400956

Lab Sample ID	Client Sample ID	Prep Type	Matrix	Method	Prep Batch
180-138845-1	SOUTH-1	Total/NA	Sediment	3660B	400955
180-138845-2	SOUTH-2	Total/NA	Sediment	3660B	400955
180-138845-3	SOUTH-3	Total/NA	Sediment	3660B	400955
180-138845-4	SOUTH-23	Total/NA	Sediment	3660B	400955
MB 180-400877/1-C	Method Blank	Total/NA	Sediment	3660B	400955
LCS 180-400877/2-C	Lab Control Sample	Total/NA	Sediment	3660B	400955

Prep Batch: 400999

Lab Sample ID	Client Sample ID	Prep Type	Matrix	Method	Prep Batch
180-138845-1	SOUTH-1	Total/NA	Sediment	3541	
180-138845-2	SOUTH-2	Total/NA	Sediment	3541	
180-138845-3	SOUTH-3	Total/NA	Sediment	3541	
180-138845-4	SOUTH-23	Total/NA	Sediment	3541	
MB 180-400999/1-B	Method Blank	Total/NA	Sediment	3541	
LCS 180-400999/2-B	Lab Control Sample	Total/NA	Sediment	3541	

Prep Batch: 401378

Lab Sample ID	Client Sample ID	Prep Type	Matrix	Method	Prep Batch
180-138845-1	SOUTH-1	Total/NA	Sediment	8151A	
180-138845-2	SOUTH-2	Total/NA	Sediment	8151A	
180-138845-3	SOUTH-3	Total/NA	Sediment	8151A	
180-138845-4	SOUTH-23	Total/NA	Sediment	8151A	
MB 180-401378/1-A	Method Blank	Total/NA	Sediment	8151A	
LCS 180-401378/2-A	Lab Control Sample	Total/NA	Sediment	8151A	
180-138845-1 MS	SOUTH-1	Total/NA	Sediment	8151A	
180-138845-1 MSD	SOUTH-1	Total/NA	Sediment	8151A	

Cleanup Batch: 401463

Lab Sample ID	Client Sample ID	Prep Type	Matrix	Method	Prep Batch
180-138845-1	SOUTH-1	Total/NA	Sediment	3640A	400999
180-138845-2	SOUTH-2	Total/NA	Sediment	3640A	400999
180-138845-3	SOUTH-3	Total/NA	Sediment	3640A	400999
180-138845-4	SOUTH-23	Total/NA	Sediment	3640A	400999
MB 180-400999/1-B	Method Blank	Total/NA	Sediment	3640A	400999
LCS 180-400999/2-B	Lab Control Sample	Total/NA	Sediment	3640A	400999

QC Association Summary

Client: ESS Group Inc
Project/Site: City Pier, New London CT

Job ID: 180-138845-1

GC Semi VOA

Analysis Batch: 401659

Lab Sample ID	Client Sample ID	Prep Type	Matrix	Method	Prep Batch
180-138845-1	SOUTH-1	Total/NA	Sediment	EPA 8151A	401378
180-138845-2	SOUTH-2	Total/NA	Sediment	EPA 8151A	401378
180-138845-3	SOUTH-3	Total/NA	Sediment	EPA 8151A	401378
180-138845-4	SOUTH-23	Total/NA	Sediment	EPA 8151A	401378
MB 180-401378/1-A	Method Blank	Total/NA	Sediment	EPA 8151A	401378
LCS 180-401378/2-A	Lab Control Sample	Total/NA	Sediment	EPA 8151A	401378
180-138845-1 MS	SOUTH-1	Total/NA	Sediment	EPA 8151A	401378
180-138845-1 MSD	SOUTH-1	Total/NA	Sediment	EPA 8151A	401378

Analysis Batch: 401661

Lab Sample ID	Client Sample ID	Prep Type	Matrix	Method	Prep Batch
180-138845-1	SOUTH-1	Total/NA	Sediment	EPA 8082A	400956
180-138845-2	SOUTH-2	Total/NA	Sediment	EPA 8082A	400956
180-138845-3	SOUTH-3	Total/NA	Sediment	EPA 8082A	400956
180-138845-4	SOUTH-23	Total/NA	Sediment	EPA 8082A	400956
MB 180-400877/1-C	Method Blank	Total/NA	Sediment	EPA 8082A	400956
LCS 180-400877/2-C	Lab Control Sample	Total/NA	Sediment	EPA 8082A	400956

Analysis Batch: 402980

Lab Sample ID	Client Sample ID	Prep Type	Matrix	Method	Prep Batch
180-138845-2	SOUTH-2	Total/NA	Sediment	EPA 8081B LL	401463
180-138845-4	SOUTH-23	Total/NA	Sediment	EPA 8081B LL	401463
MB 180-400999/1-B	Method Blank	Total/NA	Sediment	EPA 8081B LL	401463
LCS 180-400999/2-B	Lab Control Sample	Total/NA	Sediment	EPA 8081B LL	401463

Analysis Batch: 403330

Lab Sample ID	Client Sample ID	Prep Type	Matrix	Method	Prep Batch
180-138845-1	SOUTH-1	Total/NA	Sediment	EPA 8081B LL	401463
180-138845-3	SOUTH-3	Total/NA	Sediment	EPA 8081B LL	401463

HPLC/IC

Prep Batch: 263589

Lab Sample ID	Client Sample ID	Prep Type	Matrix	Method	Prep Batch
180-138845-5	SOUTH-1	Total/NA	Solid	8318A_S_Prep	
180-138845-6	SOUTH-2	Total/NA	Solid	8318A_S_Prep	
180-138845-7	SOUTH-3	Total/NA	Solid	8318A_S_Prep	
180-138845-8	SOUTH-23	Total/NA	Solid	8318A_S_Prep	
MB 410-263589/1-A	Method Blank	Total/NA	Solid	8318A_S_Prep	
LCS 410-263589/2-A	Lab Control Sample	Total/NA	Solid	8318A_S_Prep	
180-138845-5 MS	SOUTH-1	Total/NA	Solid	8318A_S_Prep	
180-138845-5 MSD	SOUTH-1	Total/NA	Solid	8318A_S_Prep	

Analysis Batch: 264037

Lab Sample ID	Client Sample ID	Prep Type	Matrix	Method	Prep Batch
180-138845-5	SOUTH-1	Total/NA	Solid	8318A	263589
180-138845-6	SOUTH-2	Total/NA	Solid	8318A	263589
180-138845-7	SOUTH-3	Total/NA	Solid	8318A	263589
180-138845-8	SOUTH-23	Total/NA	Solid	8318A	263589
MB 410-263589/1-A	Method Blank	Total/NA	Solid	8318A	263589
LCS 410-263589/2-A	Lab Control Sample	Total/NA	Solid	8318A	263589

HPLC/IC (Continued)

Analysis Batch: 264037 (Continued)

Lab Sample ID	Client Sample ID	Prep Type	Matrix	Method	Prep Batch
180-138845-5 MS	SOUTH-1	Total/NA	Solid	8318A	263589
180-138845-5 MSD	SOUTH-1	Total/NA	Solid	8318A	263589

Leach Batch: 401417

Lab Sample ID	Client Sample ID	Prep Type	Matrix	Method	Prep Batch
180-138845-1	SOUTH-1	Soluble	Sediment	DI Leach	
180-138845-2	SOUTH-2	Soluble	Sediment	DI Leach	
180-138845-3	SOUTH-3	Soluble	Sediment	DI Leach	
180-138845-4	SOUTH-23	Soluble	Sediment	DI Leach	
MB 180-401417/2-A	Method Blank	Soluble	Sediment	DI Leach	
LCS 180-401417/1-A	Lab Control Sample	Soluble	Sediment	DI Leach	

Analysis Batch: 401559

Lab Sample ID	Client Sample ID	Prep Type	Matrix	Method	Prep Batch
180-138845-1	SOUTH-1	Soluble	Sediment	EPA 9056A	401417
180-138845-2	SOUTH-2	Soluble	Sediment	EPA 9056A	401417
180-138845-3	SOUTH-3	Soluble	Sediment	EPA 9056A	401417
MB 180-401417/2-A	Method Blank	Soluble	Sediment	EPA 9056A	401417
LCS 180-401417/1-A	Lab Control Sample	Soluble	Sediment	EPA 9056A	401417

Analysis Batch: 401671

Lab Sample ID	Client Sample ID	Prep Type	Matrix	Method	Prep Batch
180-138845-4	SOUTH-23	Soluble	Sediment	EPA 9056A	401417
MB 180-401417/2-A	Method Blank	Soluble	Sediment	EPA 9056A	401417
LCS 180-401417/1-A	Lab Control Sample	Soluble	Sediment	EPA 9056A	401417

Specialty Organics

Prep Batch: 268668

Lab Sample ID	Client Sample ID	Prep Type	Matrix	Method	Prep Batch
180-138845-5	SOUTH-1	Total/NA	Solid	HRMS-Soxtherm	
180-138845-6	SOUTH-2	Total/NA	Solid	HRMS-Soxtherm	
180-138845-7	SOUTH-3	Total/NA	Solid	HRMS-Soxtherm	
180-138845-8	SOUTH-23	Total/NA	Solid	HRMS-Soxtherm	
MB 410-268668/1-A	Method Blank	Total/NA	Solid	HRMS-Soxtherm	
LCS 410-268668/2-A	Lab Control Sample	Total/NA	Solid	HRMS-Soxtherm	

Analysis Batch: 269154

Lab Sample ID	Client Sample ID	Prep Type	Matrix	Method	Prep Batch
MB 410-268668/1-A	Method Blank	Total/NA	Solid	1613B	268668
LCS 410-268668/2-A	Lab Control Sample	Total/NA	Solid	1613B	268668

Analysis Batch: 269189

Lab Sample ID	Client Sample ID	Prep Type	Matrix	Method	Prep Batch
180-138845-5	SOUTH-1	Total/NA	Solid	1613B	268668
180-138845-6	SOUTH-2	Total/NA	Solid	1613B	268668
180-138845-7	SOUTH-3	Total/NA	Solid	1613B	268668
180-138845-8	SOUTH-23	Total/NA	Solid	1613B	268668

QC Association Summary

Client: ESS Group Inc
Project/Site: City Pier, New London CT

Job ID: 180-138845-1

Metals

Prep Batch: 400971

Lab Sample ID	Client Sample ID	Prep Type	Matrix	Method	Prep Batch
180-138845-1	SOUTH-1	Total/NA	Sediment	3050B	
180-138845-2	SOUTH-2	Total/NA	Sediment	3050B	
180-138845-3	SOUTH-3	Total/NA	Sediment	3050B	
180-138845-4	SOUTH-23	Total/NA	Sediment	3050B	
MB 180-400971/1-A	Method Blank	Total/NA	Sediment	3050B	
LCS 180-400971/2-A	Lab Control Sample	Total/NA	Sediment	3050B	

Prep Batch: 401486

Lab Sample ID	Client Sample ID	Prep Type	Matrix	Method	Prep Batch
180-138845-1	SOUTH-1	Total/NA	Sediment	7471B	
180-138845-2	SOUTH-2	Total/NA	Sediment	7471B	
180-138845-3	SOUTH-3	Total/NA	Sediment	7471B	
180-138845-4	SOUTH-23	Total/NA	Sediment	7471B	
MB 180-401486/1-A	Method Blank	Total/NA	Sediment	7471B	
LCS 180-401486/2-A	Lab Control Sample	Total/NA	Sediment	7471B	

Analysis Batch: 401629

Lab Sample ID	Client Sample ID	Prep Type	Matrix	Method	Prep Batch
180-138845-1	SOUTH-1	Total/NA	Sediment	EPA 7471B	401486
180-138845-2	SOUTH-2	Total/NA	Sediment	EPA 7471B	401486
180-138845-3	SOUTH-3	Total/NA	Sediment	EPA 7471B	401486
180-138845-4	SOUTH-23	Total/NA	Sediment	EPA 7471B	401486
MB 180-401486/1-A	Method Blank	Total/NA	Sediment	EPA 7471B	401486
LCS 180-401486/2-A	Lab Control Sample	Total/NA	Sediment	EPA 7471B	401486

Leach Batch: 402348

Lab Sample ID	Client Sample ID	Prep Type	Matrix	Method	Prep Batch
180-138845-1	SOUTH-1	TCLP	Sediment	EPA 1311	
180-138845-2	SOUTH-2	TCLP	Sediment	EPA 1311	
180-138845-3	SOUTH-3	TCLP	Sediment	EPA 1311	
180-138845-4	SOUTH-23	TCLP	Sediment	EPA 1311	
LB 180-402348/1-D	Method Blank	TCLP	Sediment	EPA 1311	
180-138845-4 MS	SOUTH-23	TCLP	Sediment	EPA 1311	
180-138845-4 MS	SOUTH-23	TCLP	Sediment	EPA 1311	
180-138845-4 MSD	SOUTH-23	TCLP	Sediment	EPA 1311	
180-138845-4 MSD	SOUTH-23	TCLP	Sediment	EPA 1311	

Prep Batch: 402673

Lab Sample ID	Client Sample ID	Prep Type	Matrix	Method	Prep Batch
180-138845-1	SOUTH-1	TCLP	Sediment	3010A	402348
180-138845-2	SOUTH-2	TCLP	Sediment	3010A	402348
180-138845-3	SOUTH-3	TCLP	Sediment	3010A	402348
180-138845-4	SOUTH-23	TCLP	Sediment	3010A	402348
LB 180-402348/1-D	Method Blank	TCLP	Sediment	3010A	402348
MB 180-402673/1-A	Method Blank	Total/NA	Sediment	3010A	
LCS 180-402673/2-A	Lab Control Sample	Total/NA	Sediment	3010A	
180-138845-4 MS	SOUTH-23	TCLP	Sediment	3010A	402348
180-138845-4 MS	SOUTH-23	TCLP	Sediment	3010A	402348
180-138845-4 MSD	SOUTH-23	TCLP	Sediment	3010A	402348
180-138845-4 MSD	SOUTH-23	TCLP	Sediment	3010A	402348

QC Association Summary

Client: ESS Group Inc
Project/Site: City Pier, New London CT

Job ID: 180-138845-1

Metals

Analysis Batch: 403145

Lab Sample ID	Client Sample ID	Prep Type	Matrix	Method	Prep Batch
180-138845-1	SOUTH-1	TCLP	Sediment	EPA 6020B	402673
180-138845-2	SOUTH-2	TCLP	Sediment	EPA 6020B	402673
180-138845-3	SOUTH-3	TCLP	Sediment	EPA 6020B	402673
180-138845-4	SOUTH-23	TCLP	Sediment	EPA 6020B	402673
LB 180-402348/1-D	Method Blank	TCLP	Sediment	EPA 6020B	402673
MB 180-402673/1-A	Method Blank	Total/NA	Sediment	EPA 6020B	402673
LCS 180-402673/2-A	Lab Control Sample	Total/NA	Sediment	EPA 6020B	402673
180-138845-4 MS	SOUTH-23	TCLP	Sediment	EPA 6020B	402673
180-138845-4 MS	SOUTH-23	TCLP	Sediment	EPA 6020B	402673
180-138845-4 MSD	SOUTH-23	TCLP	Sediment	EPA 6020B	402673
180-138845-4 MSD	SOUTH-23	TCLP	Sediment	EPA 6020B	402673

Analysis Batch: 403244

Lab Sample ID	Client Sample ID	Prep Type	Matrix	Method	Prep Batch
180-138845-1	SOUTH-1	Total/NA	Sediment	EPA 6020B	400971
180-138845-2	SOUTH-2	Total/NA	Sediment	EPA 6020B	400971
180-138845-3	SOUTH-3	Total/NA	Sediment	EPA 6020B	400971
180-138845-4	SOUTH-23	Total/NA	Sediment	EPA 6020B	400971
MB 180-400971/1-A	Method Blank	Total/NA	Sediment	EPA 6020B	400971
LCS 180-400971/2-A	Lab Control Sample	Total/NA	Sediment	EPA 6020B	400971

Analysis Batch: 403449

Lab Sample ID	Client Sample ID	Prep Type	Matrix	Method	Prep Batch
180-138845-1	SOUTH-1	Total/NA	Sediment	EPA 6020B	400971
180-138845-2	SOUTH-2	Total/NA	Sediment	EPA 6020B	400971
180-138845-3	SOUTH-3	Total/NA	Sediment	EPA 6020B	400971
180-138845-4	SOUTH-23	Total/NA	Sediment	EPA 6020B	400971
MB 180-400971/1-A	Method Blank	Total/NA	Sediment	EPA 6020B	400971
LCS 180-400971/2-A	Lab Control Sample	Total/NA	Sediment	EPA 6020B	400971

General Chemistry

Analysis Batch: 263530

Lab Sample ID	Client Sample ID	Prep Type	Matrix	Method	Prep Batch
180-138845-5	SOUTH-1	Total/NA	Solid	Moisture	
180-138845-6	SOUTH-2	Total/NA	Solid	Moisture	
180-138845-7	SOUTH-3	Total/NA	Solid	Moisture	
180-138845-8	SOUTH-23	Total/NA	Solid	Moisture	

Analysis Batch: 400721

Lab Sample ID	Client Sample ID	Prep Type	Matrix	Method	Prep Batch
180-138845-1	SOUTH-1	Total/NA	Sediment	2540G	
180-138845-2	SOUTH-2	Total/NA	Sediment	2540G	
180-138845-3	SOUTH-3	Total/NA	Sediment	2540G	

Analysis Batch: 400782

Lab Sample ID	Client Sample ID	Prep Type	Matrix	Method	Prep Batch
180-138845-4	SOUTH-23	Total/NA	Sediment	2540G	

QC Association Summary

Client: ESS Group Inc
Project/Site: City Pier, New London CT

Job ID: 180-138845-1

General Chemistry

Prep Batch: 400835

Lab Sample ID	Client Sample ID	Prep Type	Matrix	Method	Prep Batch
180-138845-1	SOUTH-1	Total/NA	Sediment	3060A	
180-138845-2	SOUTH-2	Total/NA	Sediment	3060A	
180-138845-3	SOUTH-3	Total/NA	Sediment	3060A	
180-138845-4	SOUTH-23	Total/NA	Sediment	3060A	
MB 180-400835/1-A	Method Blank	Total/NA	Sediment	3060A	
LCSI 180-400835/3-A	Lab Control Sample	Total/NA	Sediment	3060A	
LCSS 180-400835/2-A	Lab Control Sample	Total/NA	Sediment	3060A	

Prep Batch: 401006

Lab Sample ID	Client Sample ID	Prep Type	Matrix	Method	Prep Batch
180-138845-1	SOUTH-1	Total/NA	Sediment	9010C	
180-138845-2	SOUTH-2	Total/NA	Sediment	9010C	
180-138845-3	SOUTH-3	Total/NA	Sediment	9010C	
180-138845-4	SOUTH-23	Total/NA	Sediment	9010C	
MB 180-401006/4-A	Method Blank	Total/NA	Sediment	9010C	
HLCS 180-401006/2-A	Lab Control Sample	Total/NA	Sediment	9010C	
LCS 180-401006/3-A	Lab Control Sample	Total/NA	Sediment	9010C	
LLCS 180-401006/1-A	Lab Control Sample	Total/NA	Sediment	9010C	
180-138845-1 MS	SOUTH-1	Total/NA	Sediment	9010C	
180-138845-1 MSD	SOUTH-1	Total/NA	Sediment	9010C	

Analysis Batch: 401078

Lab Sample ID	Client Sample ID	Prep Type	Matrix	Method	Prep Batch
180-138845-1	SOUTH-1	Total/NA	Sediment	EPA 9014	401006
180-138845-2	SOUTH-2	Total/NA	Sediment	EPA 9014	401006
180-138845-3	SOUTH-3	Total/NA	Sediment	EPA 9014	401006
180-138845-4	SOUTH-23	Total/NA	Sediment	EPA 9014	401006
MB 180-401006/4-A	Method Blank	Total/NA	Sediment	EPA 9014	401006
HLCS 180-401006/2-A	Lab Control Sample	Total/NA	Sediment	EPA 9014	401006
LCS 180-401006/3-A	Lab Control Sample	Total/NA	Sediment	EPA 9014	401006
LLCS 180-401006/1-A	Lab Control Sample	Total/NA	Sediment	EPA 9014	401006
180-138845-1 MS	SOUTH-1	Total/NA	Sediment	EPA 9014	401006
180-138845-1 MSD	SOUTH-1	Total/NA	Sediment	EPA 9014	401006

Analysis Batch: 401149

Lab Sample ID	Client Sample ID	Prep Type	Matrix	Method	Prep Batch
180-138845-1	SOUTH-1	Total/NA	Sediment	EPA 7196A	400835
180-138845-2	SOUTH-2	Total/NA	Sediment	EPA 7196A	400835
180-138845-3	SOUTH-3	Total/NA	Sediment	EPA 7196A	400835
180-138845-4	SOUTH-23	Total/NA	Sediment	EPA 7196A	400835
MB 180-400835/1-A	Method Blank	Total/NA	Sediment	EPA 7196A	400835
LCSI 180-400835/3-A	Lab Control Sample	Total/NA	Sediment	EPA 7196A	400835
LCSS 180-400835/2-A	Lab Control Sample	Total/NA	Sediment	EPA 7196A	400835

Analysis Batch: 401218

Lab Sample ID	Client Sample ID	Prep Type	Matrix	Method	Prep Batch
180-138845-1	SOUTH-1	Total/NA	Sediment	EPA-Lloyd Kahn	
180-138845-2	SOUTH-2	Total/NA	Sediment	EPA-Lloyd Kahn	
180-138845-3	SOUTH-3	Total/NA	Sediment	EPA-Lloyd Kahn	
180-138845-4	SOUTH-23	Total/NA	Sediment	EPA-Lloyd Kahn	
MB 180-401218/4	Method Blank	Total/NA	Sediment	EPA-Lloyd Kahn	

QC Association Summary

Client: ESS Group Inc
Project/Site: City Pier, New London CT

Job ID: 180-138845-1

General Chemistry (Continued)

Analysis Batch: 401218 (Continued)

Lab Sample ID	Client Sample ID	Prep Type	Matrix	Method	Prep Batch
LCS 180-401218/5	Lab Control Sample	Total/NA	Sediment	EPA-Lloyd Kahn	

Analysis Batch: 403531

Lab Sample ID	Client Sample ID	Prep Type	Matrix	Method	Prep Batch
180-138845-1	SOUTH-1	Total/NA	Sediment	7196A	
180-138845-2	SOUTH-2	Total/NA	Sediment	7196A	
180-138845-3	SOUTH-3	Total/NA	Sediment	7196A	
180-138845-4	SOUTH-23	Total/NA	Sediment	7196A	

Geotechnical

Analysis Batch: 269882

Lab Sample ID	Client Sample ID	Prep Type	Matrix	Method	Prep Batch
180-138845-1	SOUTH-1	Total/NA	Sediment	D422	
180-138845-2	SOUTH-2	Total/NA	Sediment	D422	
180-138845-3	SOUTH-3	Total/NA	Sediment	D422	

Client:	Eurofins TestAmerica				
Project:	City Pier, New London CT				
Location:	New London, CT			Project No:	GTX-315604
Boring ID:	---	Sample Type:	bag	Tested By:	cwd
Sample ID:	SOUTH-1	Test Date:	06/15/22	Checked By:	bfs
Depth :	---	Test Id:	672196		
Test Comment:	Insufficient material provided. Soil reused.				
Visual Description:	Wet, black silt				
Sample Comment:	---				

Compaction Report - ASTM D698

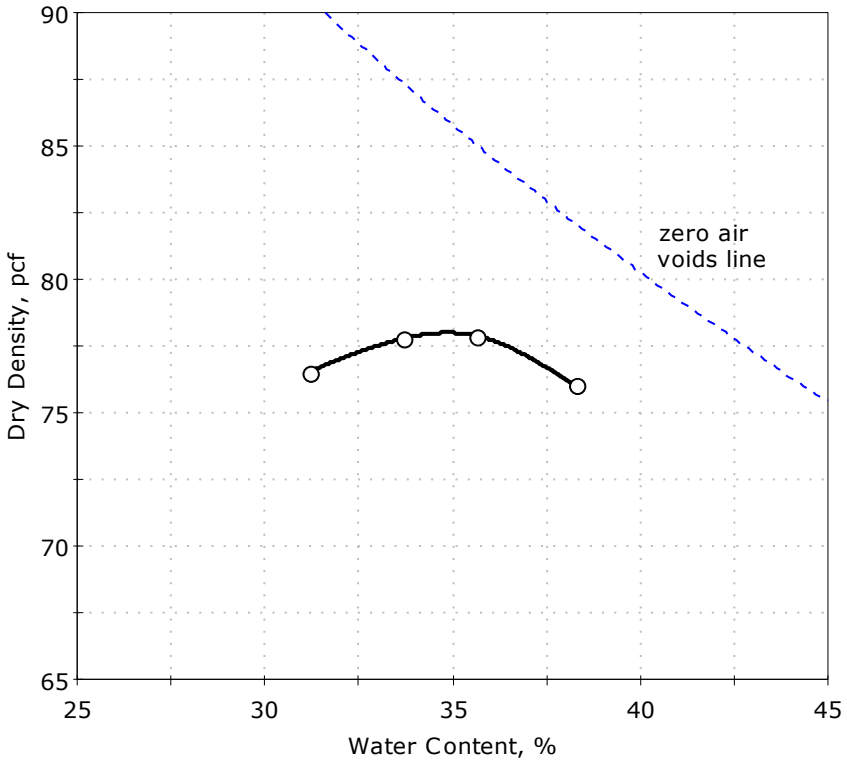

Data Points	Point 1	Point 2	Point 3	Point 4
Dry density, pcf	76.5	77.8	77.9	76.0
Moisture Content, %	31.2	33.7	35.6	38.3

Method : A

Preparation : DRY

As received Moisture :150 %

Rammer : Manual

Zero voids line based on assumed specific gravity of 2.65

Maximum Dry Density= 78.0 pcf

Optimum Moisture= 34.9 %

printed 6/16/2022 11:37:09 AM

Client:	Eurofins TestAmerica				
Project:	City Pier, New London CT				
Location:	New London, CT			Project No:	GTX-315604
Boring ID:	---	Sample Type:	bag	Tested By:	cwd
Sample ID:	SOUTH-2	Test Date:	06/15/22	Checked By:	bfs
Depth :	---	Test Id:	672197		
Test Comment:	Insufficient material provided. Soil reused.				
Visual Description:	Moist, very dark gray silt				
Sample Comment:	---				

Compaction Report - ASTM D698

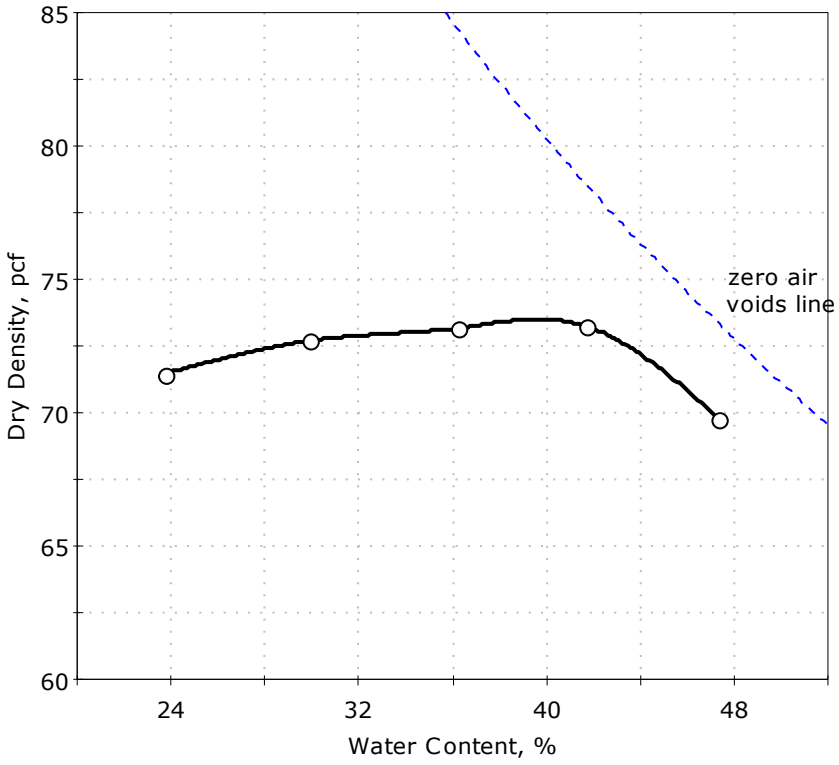

Data Points	Point 1	Point 2	Point 3	Point 4	Point 5
Dry density, pcf	71.5	72.7	73.2	73.2	69.8
Moisture Content, %	23.7	29.9	36.2	41.7	47.3

Method : A

Preparation : DRY

As received Moisture :93 %

Rammer : Manual

Zero voids line based on assumed specific gravity of 2.65

Maximum Dry Density= 73.5 pcf

Optimum Moisture= 39.6 %

printed 6/16/2022 11:41:57 AM

Client:	Eurofins TestAmerica				
Project:	City Pier, New London CT				
Location:	New London, CT			Project No:	GTX-315604
Boring ID:	---	Sample Type:	bag	Tested By:	cwd
Sample ID:	SOUTH-3	Test Date:	06/16/22	Checked By:	bfs
Depth :	---	Test Id:	672198		
Test Comment:	Insufficient material provided. Soil reused.				
Visual Description:	Wet, black silt				
Sample Comment:	---				

Compaction Report - ASTM D698

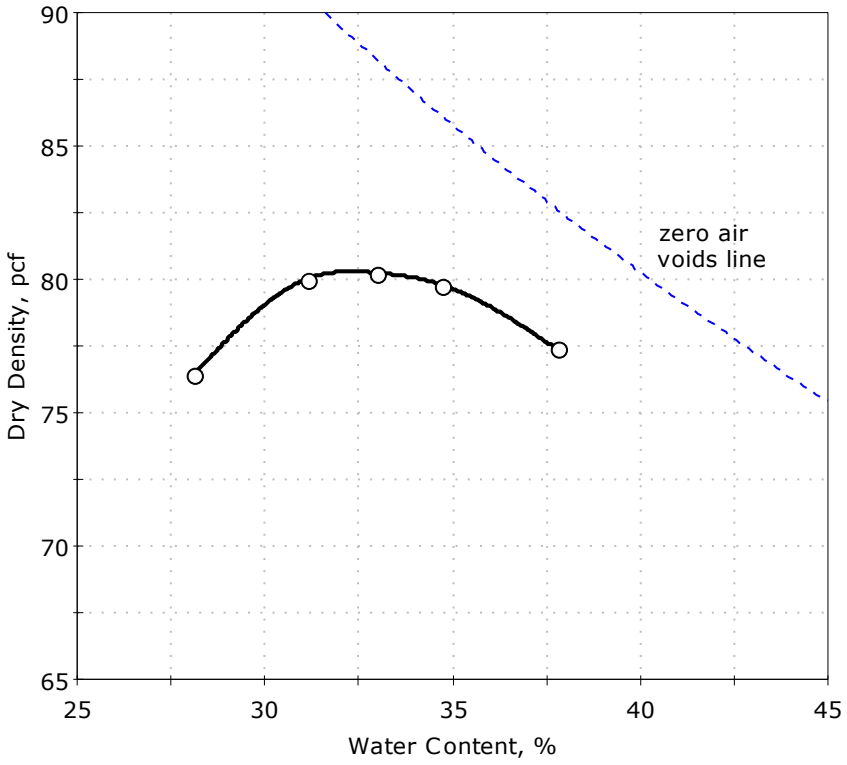

Data Points	Point 1	Point 2	Point 3	Point 4	Point 5
Dry density, pcf	76.4	80.0	80.2	79.8	77.4
Moisture Content, %	28.1	31.1	33.0	34.7	37.8

Method : A

Preparation : DRY

As received Moisture :129 %

Rammer : Manual

Zero voids line based on assumed specific gravity of 2.65

Maximum Dry Density= 80.3 pcf

Optimum Moisture= 32.3 %

printed 6/16/2022 12:58:09 PM

Eurofins Pittsburgh
301 Alpha Drive RIDC Park
Pittsburgh, PA 15238
Phone 412-963-7058 Fax 412-963-2468

Chain of Custody Record

Boston #215

eurofins | Environment Testing America

Client Information	Sampler: Michael Phillips	Lab PM: Matko, Larry	Carrier Tracking No(s):	COC No: 180-81819-15477 1
Client Contact: Ms Carrie Gamber	Phone: 781-419-7718	E-Mail: Larry Matko@et eurofinsus com	State of Origin: CT	Page: Page 1 of 1
Company: TestAmerica Laboratories, Inc.	PWSID			Job #:
Address: 301 Alpha Drive RIDC Park	Due Date Requested: 6/27/22			
City: Pittsburgh	TAT Requested (days): Standard (20 days)			
State, Zip: PA, 15238	Compliance Project: Δ Yes Δ No			
Phone	PO #: Purchase Order not required			
Email: carrie gamber@testamericainc com	WO #:			
Project Name: Quote 18025635 ESS Group	Project #: 18012356			
Site: City Pier	SSOW#:			

* Multiple SPLP analysis and SVOC Full List ON HOLD

Analysis Requested

Preservation Codes:
A - HCL, B - NaOH, C - Zn Acetate, D - Nitric Acid, E - NaHSO4, F - MeOH, G - Amchlor, H - Ascorbic Acid, I - Ice, J - DI Water, K - EDTA, L - EDA, M - Hexane, N - None, O - AsNaO2, P - Na2O4S, Q - Na2SO3, R - Na2S2O3, S - H2SO4, T - TSP Dodecahydrate, U - Acetone, V - MCAA, W - pH 4-5, Y - Trizma, Z - other (specify)

Other:

Sample Identification	Sample Date	Sample Time	Sample Type (C=comp, G=grab)	Matrix (W=water, S=solid, O=waste/oil, BT=Tissue, A=Air)	Field Filtered Sample (Yes or No)	Perform MS/MSD (Yes or No)	Soil Moisture, Org. Content	Proctor Density, Grain Size	RSR Metals, Total Sodium	Total Cyanide, Mercury	CTET pH, PCB's, PAH's	VOC's, 1,4-Dioxane	Pesticides, Aldicarb, Herbicides	Alachlor, Atrazine, Simazine	Total Chloride, Dioxins-TCDD	TCLP Lead	SPLP RSR Metals, SPLP PCB's	SPLP Total Cyanide	SVOC's Full List	Total Number of containers	Special Instructions/Notes:
			Preservation Code:																		
South-1	5/26/22	1100	C	SE			X	X	X	X	X	X	X	X	X	X					
South-2	↓	1530	↓	↓			X	X	X	X	X	X	X	X	X	X					
South-3	↓	1300	↓	↓			X	X	X	X	X	X	X	X	X	X					
South-23	↓	1300	↓	↓			X	X	X	X	X	X	X	X	X	X					

180-138845 Chain of Custody

Possible Hazard Identification
☐ Non-Hazard ☐ Flammable ☐ Skin Irritant ☐ Poison B ☐ Unknown ☐ Radiological

Sample Disposal (A fee may be assessed if samples are retained longer than 1 month)
☐ Return To Client ☑ Disposal By Lab ☐ Archive For _____ Months

Deliverable Requested: I, II, III, IV, Other (specify)

Special Instructions/QC Requirements: RDEC

Empty Kit Relinquished by	Date	Time	Method of Shipment:

Relinquished by	Date/Time	Company	Received by	Date/Time	Company
M. Phillips 5/27/22 1141			[signature]	5/27/22 1141	ENK
Relinquished by	5/27/22		D Watson	5-28-22	BETAPIS
Relinquished by	Date/Time	Company	Received by	Date/Time 9:00	Company

Custody Seals Intact. Δ Yes Δ No	Custody Seal No	Cooler Temperature(s) °C and Other Remarks

Ver: 06/08/2021

Eurofins Pittsburgh
301 Alpha Drive RIDC Park
Pittsburgh, PA 15238
Phone: 412-963-7058 Fax: 412-963-2468

Chain of Custody Record

eurofins | Environment Testing America

Client Information	Sampler: Michael Phillips	Lab PM: Matko, Larry	Carrier Tracking No(s):	COC No: 180-81819-15477.1
Client Contact: Ms. Carrie Gamber	Phone: 781-419-7718	E-Mail: Larry.Matko@et.eurofinsus.com	State of Origin: CT	Page: Page 1 of 1
Company: TestAmerica Laboratories, Inc.	PWSID:			Job #:
Address: 301 Alpha Drive RIDC Park	Due Date Requested: 6/27/22			
City: Pittsburgh	TAT Requested (days): Standard (20 days)			
State, Zip: PA, 15238	Compliance Project: Δ Yes Δ No			
Phone:	PO #: Purchase Order not required			
Email: carrie.gamber@testamericainc.com	WO #:			
Project Name: Quote 18025635 ESS Group	Project #: 18012356			
Site: City Pier	SSOW#:			

* Multiple SPLP analysis and SVOC Full List ON HOLD

Analysis Requested

Sample Identification	Sample Date	Sample Time	Sample Type (C=comp, G=grab)	Matrix (W=water, S=solid, O=waste/oil, BT=Tissue, A=Air)	Field Filtered Sample (Yes or No)	Perform MS/MSD (Yes or No)	Soil Moisture, Org. Content	Proctor Density, Grain Size	RSR Metals, Total Sodium	Total Cyanide, Mercury	CT ETPH, PCB's, PAH's	VOC's, Iso-Dioxane	Pesticides, Aldicarb, Herbicides	Alachlor, Atrazine, Simazine	Total Chloride, Dioxins-TCDD	TCLP Lead	SPLP RSR Metals, SPLP PCB's	SPLP Total Cyanide	SVOC's Full List	Total Number of containers	Special Instructions/Note:
			Preservation Code:																		
South-1	5/26/22	1100	C	SE			X	X	X	X	X	X	X	X	X	X					
South-2	↓	1530	↓	↓			X	X	X	X	X	X	X	X	X	X					
South-3	↓	1300	↓	↓			X	X	X	X	X	X	X	X	X	X					
South-23	↓	1300	↓	↓			X	X	X	X	X	X	X	X	X	X					

Preservation Codes:

A - HCL
B - NaOH
C - Zn Acetate
D - Nitric Acid
E - NaHSO4
F - MeOH
G - Amchlor
H - Ascorbic Acid
I - Ice
J - DI Water
K - EDTA
L - EDA
M - Hexane
N - None
O - AsNaO2
P - Na2O4S
Q - Na2SO3
R - Na2S2O3
S - H2SO4
T - TSP Dodecahydrate
U - Acetone
V - MCAA
W - pH 4-5
Y - Trizma
Z - other (specify)

Other:

Possible Hazard Identification
☐ Non-Hazard ☐ Flammable ☐ Skin Irritant ☐ Poison B ☐ Unknown ☐ Radiological

Sample Disposal (A fee may be assessed if samples are retained longer than 1 month)
☐ Return To Client ☑ Disposal By Lab ☐ Archive For _____ Months

Deliverable Requested: I, II, III, IV, Other (specify)

Special Instructions/QC Requirements: RDEC

Empty Kit Relinquished by:	Date:	Time:	Method of Shipment:

Relinquished by:	Date/Time:	Company	Received by:	Date/Time:	Company
M. Phillips 5/27/22 1141			[signature]	5/27/22 1141	ENK
Relinquished by:	Date/Time:	Company	Received by:	Date/Time:	Company
Relinquished by:	Date/Time:	Company	Received by:	Date/Time:	Company

Custody Seals Intact: Δ Yes Δ No	Custody Seal No.:	Cooler Temperature(s) °C and Other Remarks:

Ver: 06/08/2021

7/9/2022

eurofins

Part # 159469-434 MTW EXP 11/22

ORIGIN ID:BXCA (781) 466-6900
PAUL HOBART
TESTAMERICA
240 BEAR HILL ROAD
SUITE 101
WALTHAM, MA 02451
UNITED STATES US

SHIP DATE: 27MAY22
ACTWGT: 48.60 LB
CAD: 0319373/CAFE3511

BILL RECIPIENT

TO **SAMPLE RECEIVING**
TESTAMERICA PITTSBURGH
301 ALPHA DRIVE
RIDC PARK
PITTSBURGH PA 15238

(412) 963-7058 REF:
INV:
PO: DEPT:

FedEx Express

1 of 2

TRK# 0201 5537 0671 5018

MASTER

XO AGCA

SATURDAY 12:
PRIORITY OVERNI

Temp 21 °C
Thermometer ID 16
CF 0.0 Initials
PT-WI-SR-001 effective 11/8/18

180-138845 Waybill

eurofins
Part # 159469-494 MM EXP 11/22
ORIGIN ID:BXCA (781) 466-6900
PAUL HOBART
TESTAMERICA
240 BEAR HILL ROAD
SUITE 104
WALTHAM, MA 02451
UNITED STATES US
SHIP DATE: 27MAY22
ACTWGT: 51.30 LB
CAD: 0319379/CAFE3511
BILL RECIPIENT
TO SAMPLE RECEIVING
TESTAMERICA PITTSBURGH
301 ALPHA DRIVE
RIDC PARK
PITTSBURGH PA 15238
(412) 963-7058
REF:
INV:
PO:
DEPT:
FedEx Express
SATURDAY 12:00P
PRIORITY OVERNIGHT
2 of 2
MPS# 5537 0671 5029
0253
0201
Mstr# 5537 0671 5018
XO ACCA
15238
PITT
PA-US
Uncorrected temp
Thermometer ID
CF
Initials
PT-WI-SR-001 effective 11/8/18

eurofins | Environment Testing America

180-138845 Chain of Custody

Cooler/Sample Receipt and Temperature Log Form

Client Information

Client: Eurofins

City/State: CITY ~~Cedar Falls~~ Pittsburgh AA | STATE ~~IA~~ PA AA | Project: Cryeler

Receipt Information

Date/Time Received: DATE ~~6/3/22~~ AA 6/4/22 | TIME 920 | Received By: AA

Delivery Type: ☐ UPS ☑ FedEx SAT ☐ FedEx Ground ☐ US Mail ☐ Spee-Dee ☐ Lab Courier ☐ Lab Field Services ☐ Client Drop-off ☐ Other:_____

Condition of Cooler/Containers

Sample(s) received in Cooler? ☑ Yes ☐ No *If yes:* Cooler ID:

Multiple Coolers? ☐ Yes ☑ No *If yes:* Cooler # _____ of _____

Cooler Custody Seals Present? ☐ Yes ☑ No *If yes:* Cooler custody seals intact? ☐ Yes ☐ No

Sample Custody Seals Present? ☐ Yes ☑ No *If yes:* Sample custody seals intact? ☐ Yes ☐ No

Trip Blank Present? ☐ Yes ☑ No *If yes:* Which VOA samples are in cooler? ↓

Temperature Record

Coolant: ☑ Wet ice ☐ Blue ice ☐ Dry ice ☐ Other:_____ ☐ NONE

Thermometer ID: N | Correction Factor (°C): 0.0

• **Temp Blank Temperature** – If no temp blank, or temp blank temperature above criteria, proceed to Sample Container Temperature

Uncorrected Temp (°C): 4.5 | Corrected Temp (°C): 4.5

• **Sample Container Temperature**

	CONTAINER 1	CONTAINER 2
Container(s) used:	4oz clearglass	
Uncorrected Temp (°C):	4.6	
Corrected Temp (°C):	4.6	

Exceptions Noted

1) If temperature exceeds criteria, was sample(s) received same day of sampling? ☐ Yes ☐ No
   a) *If yes:* Is there evidence that the chilling process began? ☐ Yes ☐ No

2) If temperature is <0°C, are there obvious signs that the integrity of sample containers is compromised? (e.g., bulging septa, broken/cracked bottles, frozen solid?) ☐ Yes ☐ No

NOTE: If yes, contact PM before proceeding. If no, proceed with login

Additional Comments

Eurofins Pittsburgh
301 Alpha Drive RIDC Park
Pittsburgh PA 15238
Phone. 412-963-7058 Fax: 412-963-2468

Chain of Custody Record

eurofins | Environment Testing America

Client Information (Sub Contract Lab)	Sampler:	Lab PM: Gamber, Carrie L	Carrier Tracking No(s)	COC No. 180-462801 1
Client Contact: Shipping/Receiving	Phone:	E-Mail: Carrie Gamber@et.eurofinsus com	State of Origin: Connecticut	Page: Page 1 of 1
Company: Eurofins Environment Testing North Centr		Accreditations Required (See note).		Job #: 180-138845-1
Address: 3019 Venture Way	Due Date Requested: 6/27/2022			
City: Cedar Falls	TAT Requested (days):			
State Zip: IA, 50613				
Phone: 319-277-2401(Tel) 319-277-2425(Fax)	PO #:			
Email.	WO #:			
Project Name: City Pier, New London CT	Project #: 18025640			
Site:	SSOW#:			

Analysis Requested

Preservation Codes:
A HCL, B - NaOH, C - Zn Acetate, D - Nitric Acid, E - NaHSO4, F - MeOH, G - Amchlor, H - Ascorbic Acid, I - Ice, J - DI Water, K - EDTA, L EDA
M - Hexane, N - None, O - AsNaO2, P - Na2O4S, Q - Na2SO3, R - Na2S2O3, S - H2SO4, T - TSP Dodecahydrate, U Acetone, V - MCAA, W - pH 4-5, Y - Trizma, Z other (specify)
Other:

Sample Identification - Client ID (Lab ID)	Sample Date	Sample Time	Sample Type (C=comp, G=grab)	Matrix (W=water S=solid, O=waste/oil, BT=Tissue, A=Air)	Field Filtered Sample (Yes or No)	Perform MS/MSD (Yes or No)	8270E_AgChem/3546 (MOD) Copy Analytes	Total Number of containers	Special Instructions/Note:
			Preservation Code:						
SOUTH-1 (180-138845-5)	5/26/22	11 00 Eastern		Solid			X	1	
SOUTH-2 (180-138845-6)	5/26/22	15 30 Eastern		Solid			X	1	
SOUTH-3 (180-138845-7)	5/26/22	13 00 Eastern		Solid			X	1	
SOUTH-23 (180-138845-8)	5/26/22	13 00 Eastern		Solid			X	1	

Note: Since laboratory accreditations are subject to change, Eurofins Pittsburgh places the ownership of method analyte & accreditation compliance upon out subcontract laboratories. This sample shipment is forwarded under chain-of-custody If the laboratory does not currently maintain accreditation in the State of Origin listed above for analysis/tests/matrix being analyzed the samples must be shipped back to the Eurofins Pittsburgh laboratory or other instructions will be provided. Any changes to accreditation status should be brought to Eurofins Pittsburgh attention immediately If all requested accreditations are current to date return the signed Chain of Custody attesting to said complicance to Eurofins Pittsburgh.

Possible Hazard Identification *Unconfirmed*	***Sample Disposal (A fee may be assessed if samples are retained longer than 1 month)*** ☐ *Return To Client* ☐ *Disposal By Lab* ☐ *Archive For* _____ *Months*
Deliverable Requested I, II, III, IV, Other (specify) Primary Deliverable Rank: 2	Special Instructions/QC Requirements

Empty Kit Relinquished by:	Date.	Time.		Method of Shipment:	
Relinquished by: MO	Date/Time: 6-3-22 1700	Company: ecl	Received by:	Date/Time:	Company
Relinquished by:	Date/Time:	Company	Received by:	Date/Time:	Company
Relinquished by:	Date/Time:	Company	Received by: AA	Date/Time: 6/4/22 0720	Company
Custody Seals Intact: Δ Yes Δ No	Custody Seal No		Cooler Temperature(s) °C and Other Remarks:		

Ver: 06/08/2021

Eurofins Pittsburgh
301 Alpha Drive RIDC Park
Pittsburgh, PA 15238
Phone: 412-963-7058 Fax: 412-963-2468

Chain of Custody Record

eurofins | Environment Testing America

Client Information (Sub Contract Lab)	Sampler:	Lab PM: Gamber, Carrier L	Carrier Tracking No(s):	COC No: 180-462666.1
Client Contact: Shipping/Receiving	Phone:	E-Mail: Carrie.Gamber@et.eurofinsus.com	State of Origin: Connecticut	Page: Page 1 of 1
Company: Eurofins Lancaster Laboratories Environm		Accreditations Required (See note):		Job #: 180-138845-1
Address: 2425 New Holland Pike, ,	Due Date Requested: 6/27/2022			
City: Lancaster	TAT Requested (days):			
State, Zip: PA, 17601				
Phone: 717-656-2300(Tel)	PO #:			
Email:	WO #:			
Project Name: City Pier, New London CT	Project #: 18025640			
Site:	SSOW#:			

Analysis Requested

Preservation Codes:

A - HCL
B - NaOH
C - Zn Acetate
D - Nitric Acid
E - NaHSO4
F - MeOH
G - Amchlor
H - Ascorbic Acid
I - Ice
J - DI Water
K - EDTA
L - EDA
M - Hexane
N - None
O - AsNaO2
P - Na2O4S
Q - Na2SO3
R - Na2S2O3
S - H2SO4
T - TSP Dodecahydrate
U - Acetone
V - MCAA
W - pH 4-5
Y - Trizma
Z - other (specify)
Other:

Sample Identification - Client ID (Lab ID)	Sample Date	Sample Time	Sample Type (C=comp, G=grab)	Matrix (W=water, S=solid, O=waste/oil, BT=Tissue, A=Air)	Field Filtered Sample (Yes or No)	Perform MS/MSD (Yes or No)	D422/ Routine Grainsize	Total Number of containers	Special Instructions/Note:
			Preservation Code:						
SOUTH-1 (180-138845-1)	5/26/22	11:00 Eastern		Sediment			X	1	
SOUTH-2 (180-138845-2)	5/26/22	15:30 Eastern		Sediment			X	1	
SOUTH-3 (180-138845-3)	5/26/22	13:00 Eastern		Sediment			X	1	

Note: Since laboratory accreditations are subject to change, Eurofins Pittsburgh places the ownership of method, analyte & accreditation compliance upon out subcontract laboratories. This sample shipment is forwarded under chain-of-custody. If the laboratory does not currently maintain accreditation in the State of Origin listed above for analysis/tests/matrix being analyzed, the samples must be shipped back to the Eurofins Pittsburgh laboratory or other instructions will be provided. Any changes to accreditation status should be brought to Eurofins Pittsburgh attention immediately. If all requested accreditations are current to date, return the signed Chain of Custody attesting to said complicance to Eurofins Pittsburgh.

Possible Hazard Identification	*Sample Disposal (A fee may be assessed if samples are retained longer than 1 month)*
Unconfirmed	☐ *Return To Client* ☐ *Disposal By Lab* ☐ *Archive For* _____ *Months*
Deliverable Requested: I, II, III, IV, Other (specify) Primary Deliverable Rank: 2	Special Instructions/QC Requirements:

Empty Kit Relinquished by:	Date:	Time:	Method of Shipment:

Relinquished by	Date/Time	Company	Received by	Date/Time	Company
[illegible]	6-2-22 1700	[illegible]			
			[illegible]	6/3/22 1058	[illegible]

Custody Seals Intact: Δ Yes Δ No	Custody Seal No.:	Cooler Temperature(s) °C and Other Remarks: 0-3

JM

Ver: 06/08/2021

Eurofins Pittsburgh
301 Alpha Drive RIDC Park
Pittsburgh, PA 15238
Phone: 412-963-7058 Fax: 412-963-2468

Chain of Custody Record

eurofins | Environment Testing America

Client Information (Sub Contract Lab)	Sampler:	Lab PM: Gamber, Carrier L	Carrier Tracking No(s):	COC No: 180-462803.1
Client Contact: Shipping/Receiving	Phone:	E-Mail: Carrie.Gamber@et.eurofinsus.com	State of Origin: Connecticut	Page: Page 1 of 1
Company: Eurofins Lancaster Laboratories Environm		Accreditations Required (See note):		Job #: 180-138845-1
Address: 2425 New Holland Pike,	Due Date Requested: 6/27/2022			
City: Lancaster	TAT Requested (days):			
State, Zip: PA, 17601				
Phone: 717-656-2300(Tel)	PO #:			
Email:	WO #:			
Project Name: City Pier, New London CT	Project #: 18025640			
Site:	SSOW#:			

Analysis Requested

Preservation Codes:

A - HCL
B - NaOH
C - Zn Acetate
D - Nitric Acid
E - NaHSO4
F - MeOH
G - Amchlor
H - Ascorbic Acid
I - Ice
J - DI Water
K - EDTA
L - EDA
M - Hexane
N - None
O - AsNaO2
P - Na2O4S
Q - Na2SO3
R - Na2S2O3
S - H2SO4
T - TSP Dodecahydrate
U - Acetone
V - MCAA
W - pH 4-5
Y - Trizma
Z - other (specify)
Other:

Sample Identification - Client ID (Lab ID)	Sample Date	Sample Time	Sample Type (C=comp, G=grab)	Matrix (W=water, S=solid, O=waste/oil, BT=Tissue, A=Air)	Field Filtered Sample (Yes or No)	Perform MS/MSD (Yes or No)	CT_ETPH/3550C CTETPH	8318A/8318A_S_Prep (MOD) Custom Analyte	1613B/HRMS_Soxthm_P 2,3,7,8-TCDD	Moisture/ Percent Moisture	Total Number of containers	Special Instructions/Note:
			Preservation Code:									
SOUTH-1 (180-138845-5)	5/26/22	11:00 Eastern		Solid			X	X	X	X	3	
SOUTH-2 (180-138845-6)	5/26/22	15:30 Eastern		Solid			X	X	X	X	3	
SOUTH-3 (180-138845-7)	5/26/22	13:00 Eastern		Solid			X	X	X	X	3	
SOUTH-23 (180-138845-8)	5/26/22	13:00 Eastern		Solid			X	X	X	X	3	

Note: Since laboratory accreditations are subject to change, Eurofins Pittsburgh places the ownership of method, analyte & accreditation compliance upon out subcontract laboratories. This sample shipment is forwarded under chain-of-custody. If the laboratory does not currently maintain accreditation in the State of Origin listed above for analysis/tests/matrix being analyzed, the samples must be shipped back to the Eurofins Pittsburgh laboratory or other instructions will be provided. Any changes to accreditation status should be brought to Eurofins Pittsburgh attention immediately. If all requested accreditations are current to date, return the signed Chain of Custody attesting to said complicance to Eurofins Pittsburgh.

Possible Hazard Identification	*Sample Disposal (A fee may be assessed if samples are retained longer than 1 month)*
Unconfirmed	☐ *Return To Client* ☐ *Disposal By Lab* ☐ *Archive For* _____ *Months*
Deliverable Requested: I, II, III, IV, Other (specify) Primary Deliverable Rank: 2	Special Instructions/QC Requirements:

Empty Kit Relinquished by:	Date:	Time:	Method of Shipment:

Relinquished by	Date/Time	Company	Received by	Date/Time	Company
[signature]	6-3-22 1700	[illegible]	[signature]	[signature]	
Relinquished by: [signature]	Date/Time	Company	Received by: [signature]	Date/Time: [signature]	Company
Relinquished by: [signature]	Date/Time	Company	Received by: [signature]	Date/Time: 6-4-22 1010	Company EUE

Custody Seals Intact: Δ Yes Δ No	Custody Seal No.:	Cooler Temperature(s) °C and Other Remarks: 4.1

JM

Ver: 06/08/2021

Login Sample Receipt Checklist

Client: ESS Group Inc

Job Number: 180-138845-1

Login Number: 138845
List Number: 1
Creator: Watson, Debbie

List Source: Eurofins Pittsburgh

Question	Answer	Comment
Radioactivity wasn't checked or is </= background as measured by a survey meter.	N/A	
The cooler's custody seal, if present, is intact.	True	
Sample custody seals, if present, are intact.	True	
The cooler or samples do not appear to have been compromised or tampered with.	True	
Samples were received on ice.	True	
Cooler Temperature is acceptable.	True	
Cooler Temperature is recorded.	True	
COC is present.	True	
COC is filled out in ink and legible.	True	
COC is filled out with all pertinent information.	True	
Is the Field Sampler's name present on COC?	True	
There are no discrepancies between the containers received and the COC.	True	
Samples are received within Holding Time (excluding tests with immediate HTs)	True	
Sample containers have legible labels.	True	
Containers are not broken or leaking.	True	
Sample collection date/times are provided.	True	
Appropriate sample containers are used.	True	
Sample bottles are completely filled.	True	
Sample Preservation Verified.	True	
There is sufficient vol. for all requested analyses, incl. any requested MS/MSDs	True	
Containers requiring zero headspace have no headspace or bubble is <6mm (1/4").	True	
Multiphasic samples are not present.	True	
Samples do not require splitting or compositing.	True	
Residual Chlorine Checked.	N/A	

Login Sample Receipt Checklist

Client: ESS Group Inc

Job Number: 180-138845-1

Login Number: 138845
List Number: 4
Creator: Homolar, Dana J

List Source: Eurofins Cedar Falls
List Creation: 06/06/22 07:58 AM

Question	Answer	Comment
Radioactivity wasn't checked or is </= background as measured by a survey meter.	N/A	
The cooler's custody seal, if present, is intact.	N/A	
Sample custody seals, if present, are intact.	N/A	
The cooler or samples do not appear to have been compromised or tampered with.	True	
Samples were received on ice.	True	
Cooler Temperature is acceptable.	True	
Cooler Temperature is recorded.	True	
COC is present.	True	
COC is filled out in ink and legible.	True	
COC is filled out with all pertinent information.	True	
Is the Field Sampler's name present on COC?	False	Received project as a subcontract.
There are no discrepancies between the containers received and the COC.	True	
Samples are received within Holding Time (excluding tests with immediate HTs)	True	
Sample containers have legible labels.	True	
Containers are not broken or leaking.	True	
Sample collection date/times are provided.	True	
Appropriate sample containers are used.	True	
Sample bottles are completely filled.	True	
Sample Preservation Verified.	True	
There is sufficient vol. for all requested analyses, incl. any requested MS/MSDs	True	
Containers requiring zero headspace have no headspace or bubble is <6mm (1/4").	True	
Multiphasic samples are not present.	True	
Samples do not require splitting or compositing.	True	
Residual Chlorine Checked.	N/A	

Login Sample Receipt Checklist

Client: ESS Group Inc

Job Number: 180-138845-1

Login Number: 138845
List Number: 2
Creator: McCaskey, Jonathan

List Source: Eurofins Lancaster Laboratories Environment Testing, LLC
List Creation: 06/03/22 12:45 PM

Question	Answer	Comment
The cooler's custody seal is intact.	N/A	
The cooler or samples do not appear to have been compromised or tampered with.	True	
Samples were received on ice.	True	
Cooler Temperature is acceptable (</=6C, not frozen).	True	
Cooler Temperature is recorded.	True	
WV: Container Temperature is acceptable (</=6C, not frozen).	N/A	
WV: Container Temperature is recorded.	N/A	
COC is present.	True	
COC is filled out in ink and legible.	True	
COC is filled out with all pertinent information.	True	
There are no discrepancies between the containers received and the COC.	True	
Sample containers have legible labels.	True	
Containers are not broken or leaking.	True	
Sample collection date/times are provided.	True	
Appropriate sample containers are used.	True	
Sample bottles are completely filled.	True	
There is sufficient vol. for all requested analyses.	True	
Is the Field Sampler's name present on COC?	False	Received project as a subcontract.
Sample custody seals are intact.	N/A	

Login Sample Receipt Checklist

Client: ESS Group Inc

Job Number: 180-138845-1

Login Number: 138845
List Number: 3
Creator: McCaskey, Jonathan

List Source: Eurofins Lancaster Laboratories Environment Testing, LLC
List Creation: 06/04/22 03:42 PM

Question	Answer	Comment
The cooler's custody seal is intact.	True	
The cooler or samples do not appear to have been compromised or tampered with.	True	
Samples were received on ice.	True	
Cooler Temperature is acceptable (</=6C, not frozen).	True	
Cooler Temperature is recorded.	True	
WV: Container Temperature is acceptable (</=6C, not frozen).	N/A	
WV: Container Temperature is recorded.	N/A	
COC is present.	True	
COC is filled out in ink and legible.	True	
COC is filled out with all pertinent information.	True	
There are no discrepancies between the containers received and the COC.	True	
Sample containers have legible labels.	True	
Containers are not broken or leaking.	True	
Sample collection date/times are provided.	True	
Appropriate sample containers are used.	True	
Sample bottles are completely filled.	True	
There is sufficient vol. for all requested analyses.	True	
Is the Field Sampler's name present on COC?	False	Received project as a subcontract.
Sample custody seals are intact.	N/A	

TABLE 1
SEDIMENT ANALYTICAL DATA SUMMARY
CITY PIER
NEW LONDON, CONNECTICUT

		SAMPLE ID:	SOUTH-1				SOUTH-2				SOUTH-3				SOUTH-23			
		LAB ID:	180-138845-1				180-138845-2				180-138845-3				180-138845-4			
		COLLECTION DATE:	05/26/2022 11:00 AM				05/26/2022 3:30 PM				05/26/2022 1:00 PM				05/26/2022 1:00 PM			
		LOCATION:	City Pier				City Pier				City Pier				City Pier			
		SAMPLE MATRIX:	Sediment				Sediment				Sediment				Sediment			
		PROJECT AREA:	New London, Connecticut				New London, Connecticut				New London, Connecticut				New London, Connecticut			
															Duplicate of South-3			
ANALYTE	**CT-RSR-DEC-Residential Thresholds**	**Units**	**Conc**	**Qual**	**RL**	**MDL**	**Conc**	**Qual**	**RL**	**MDL**	**Conc**	**Qual**	**RL**	**MDL**	**Conc**	**Qual**	**RL**	**MDL**
Volatile Organic Compounds by GC/MS																		
1,1,1-Trichloroethane	500000	ug/Kg	ND		13	4.3	ND		11	3.6	ND		9.8	3.3	ND		9.6	3.2
1,1,2,2-Tetrachloroethane	3100	ug/Kg	ND		13	4.0	ND		11	3.3	ND		9.8	3.0	ND		9.6	2.9
1,1,2-Trichloro-1,2,2-trifluoroethane		ug/Kg	ND		13	5.2	ND		11	4.3	ND		9.8	3.9	ND		9.6	3.9
1,1,2-Trichloroethane	11000	ug/Kg	ND		13	2.6	ND		11	2.1	ND		9.8	1.9	ND		9.6	1.9
1,1-Dichloroethane	500000	ug/Kg	ND		13	4.2	ND		11	3.4	ND		9.8	3.1	ND		9.6	3.1
1,1-Dichloroethene	1000	ug/Kg	ND		13	5.9	ND		11	4.8	ND		9.8	4.4	ND		9.6	4.4
1,2-Dibromo-3-Chloropropane		ug/Kg	ND		13	8.4	ND		11	6.9	ND		9.8	6.3	ND		9.6	6.2
1,2-Dichlorobenzene	500000	ug/Kg	ND		13	4.4	ND		11	3.6	ND		9.8	3.3	ND		9.6	3.2
1,2-Dichloroethane	6700	ug/Kg	ND		13	3.7	ND		11	3.1	ND		9.8	2.8	ND		9.6	2.8
1,2-Dichloropropane	9000	ug/Kg	ND		13	3.5	ND		11	2.8	ND		9.8	2.6	ND		9.6	2.6
1,2,4-Trichlorobenzene		ug/Kg	ND		13	6.6	ND		11	5.4	ND		9.8	5.0	ND		9.6	4.9
1,3-Dichlorobenzene	500000	ug/Kg	ND		13	8.0	ND		11	6.6	ND		9.8	6.0	ND		9.6	5.9
1,4-Dichlorobenzene	26000	ug/Kg	ND		13	3.9	ND		11	3.2	ND		9.8	2.9	ND		9.6	2.9
2-Butanone (MEK)	500000	ug/Kg	ND		13	6.6	ND		11	5.4	ND		9.8	5.0	ND		9.6	4.9
2-Hexanone		ug/Kg	ND		13	4.1	ND		11	3.4	ND		9.8	3.1	ND		9.6	3.0
4-Methyl-2-pentanone (MIBK)	500000	ug/Kg	ND		13	4.8	ND		11	3.9	ND		9.8	3.6	ND		9.6	3.5
Acetone	500000	ug/Kg	**29**	J	52	10	ND		43	8.4	ND		39	7.6	ND		39	7.5
Benzene	21000	ug/Kg	ND		13	3.7	ND		11	3.0	ND		9.8	2.8	ND		9.6	2.7
Bromoform	78000	ug/Kg	ND		13	6.6	ND		11	5.4	ND		9.8	4.9	ND		9.6	4.9
Bromomethane		ug/Kg	ND		13	5.9	ND		11	4.9	ND		9.8	4.5	ND		9.6	4.4
Carbon disulfide		ug/Kg	**10**	J	13	10	ND		11	8.6	ND		9.8	7.8	ND		9.6	7.7
Carbon tetrachloride	4700	ug/Kg	ND		13	5.3	ND		11	4.3	ND		9.8	4.0	ND		9.6	3.9
Chlorobenzene	500000	ug/Kg	ND		13	3.4	ND		11	2.8	ND		9.8	2.5	ND		9.6	2.5
Chlorodibromomethane	7300	ug/Kg	ND		13	6.5	ND		11	5.3	ND		9.8	4.8	ND		9.6	4.8
Chloroform	100000	ug/Kg	ND		13	4.2	ND		11	3.4	**3.1**	J	9.8	3.1	**3.2**	J	9.6	3.1
Chloromethane		ug/Kg	ND		13	5.2	ND		11	4.2	ND		9.8	3.9	ND		9.6	3.8
Chloroethane		ug/Kg	ND		13	7.6	ND		11	6.3	ND		9.8	5.7	ND		9.6	5.6
cis-1,2-Dichloroethene	500000	ug/Kg	ND		13	3.9	ND		11	3.2	ND		9.8	3.0	ND		9.6	2.9
cis-1,3-Dichloropropene		ug/Kg	ND		13	5.8	ND		11	4.7	ND		9.8	4.3	ND		9.6	4.3
Dichlorobromomethane		ug/Kg	ND		13	6.1	ND		11	5.0	ND		9.8	4.6	ND		9.6	4.5
Dichlorodifluoromethane		ug/Kg	ND		13	6.5	ND		11	5.3	ND		9.8	4.9	ND		9.6	4.8
Ethylbenzene	500000	ug/Kg	ND		13	4.8	ND		11	4.0	ND		9.8	3.6	ND		9.6	3.6
1,2-Dibromoethane	7	ug/Kg	ND		13	3.6	ND		11	2.9	ND		9.8	2.7	ND		9.6	2.6
Cyclohexane		ug/Kg	ND		13	6.2	ND		11	5.1	ND		9.8	4.7	ND		9.6	4.6
Isopropylbenzene		ug/Kg	ND		13	6.8	ND		11	5.6	ND		9.8	5.1	ND		9.6	5.0
Methyl acetate		ug/Kg	ND		65	19	ND		54	16	ND		49	14	ND		48	14
Methyl tert-butyl ether	500000	ug/Kg	ND		13	3.8	ND		11	3.1	ND		9.8	2.9	ND		9.6	2.8
Methylcyclohexane		ug/Kg	ND		13	6.3	ND		11	5.2	ND		9.8	4.7	ND		9.6	4.6
Methylene Chloride	82000	ug/Kg	ND		13	12	ND		11	9.7	ND		9.8	8.8	ND		9.6	8.7
Styrene	500000	ug/Kg	ND		13	3.9	ND		11	3.2	ND		9.8	2.9	ND		9.6	2.9
Tetrachloroethene	12000	ug/Kg	ND		13	5.2	ND		11	4.3	ND		9.8	3.9	ND		9.6	3.9
Toluene	500000	ug/Kg	ND		13	3.7	ND		11	3.1	ND		9.8	2.8	ND		9.6	2.8
trans-1,2-Dichloroethene	500000	ug/Kg	ND		13	4.6	ND		11	3.7	ND		9.8	3.4	ND		9.6	3.4
trans-1,3-Dichloropropene		ug/Kg	ND		13	5.9	ND		11	4.8	ND		9.8	4.4	ND		9.6	4.3
Trichloroethene	56000	ug/Kg	ND		13	4.1	ND		11	3.4	ND		9.8	3.1	ND		9.6	3.0
Trichlorofluoromethane		ug/Kg	ND		13	11	ND		11	8.9	ND		9.8	8.1	ND		9.6	8.0
Vinyl chloride	320	ug/Kg	ND		13	9.4	ND		11	7.7	ND		9.8	7.0	ND		9.6	6.9
Xylenes, Total	500000	ug/Kg	ND		26	19	ND		21	15	ND		20	14	ND		19	14
Semivolatile Organic Compounds by GC/MS - Low Level																		
Anthracene	1000000	ug/Kg	**520**		85	22	**42**		36	9.2	**61**		13	3.4	**69**		13	3.3
Benzo[a]anthracene	1000	ug/Kg	**1600**		85	38	**110**		36	16	**140**		13	5.9	**170**		13	5.7
Benzo[b]fluoranthene	1000	ug/Kg	**2500**		85	21	**130**		36	8.7	**160**		13	3.2	**230**		13	3.1
Benzo[k]fluoranthene	8400	ug/Kg	**890**		85	26	**38**		36	11	**55**		13	3.9	**92**		13	3.8
Benzo[g,h,i]perylene		ug/Kg	**1500**		85	18	**100**		36	7.6	**92**		13	2.8	**140**		13	2.7
Benzo[a]pyrene	1000	ug/Kg	**1700**		85	37	**130**		36	15	**140**		13	5.7	**170**		13	5.5
Chrysene		ug/Kg	**2000**		85	47	**110**		36	20	**140**		13	7.3	**230**		13	7.0
Dibenz(a,h)anthracene		ug/Kg	**350**		85	54	**25**	J	36	23	**27**		13	8.4	**43**		13	8.1
Fluoranthene	1000000	ug/Kg	**2600**		85	22	**130**		36	9.3	**140**		13	3.5	**140**		13	3.3
Fluorene	1000000	ug/Kg	**220**		85	17	**19**	J	36	7.0	**12**	J	13	2.6	**17**		13	2.5
Indeno[1,2,3-cd]pyrene		ug/Kg	**1400**		85	42	**86**		36	18	**85**		13	6.5	**130**		13	6.3
Phenanthrene	1000000	ug/Kg	**1300**		85	23	**66**		36	9.5	**35**		13	3.5	**64**		13	3.4
1,4-Dioxane		ug/Kg	ND		850	130	ND		350	55	ND		130	20	ND		130	20
Pyrene	1000000	ug/Kg	**3400**		85	20	**330**		36	8.4	**330**		13	3.1	**370**		13	3.0
Acenaphthene		ug/Kg	**190**		85	24	**14**	J	36	10	**7.4**	J	13	3.8	**9.3**	J	13	3.6
Acenaphthylene	1000000	ug/Kg	**120**		85	19	**18**	J	36	7.7	**41**		13	2.9	**41**		13	2.8
Naphthalene	1000000	ug/Kg	**89**		85	17	**18**	J	36	6.9	**17**		13	2.6	**170**		13	2.5
Atrazine	2800	ug/Kg	ND		850	190	ND		360	77	ND		130	29	ND		130	28
Metals (ICP/MS)																		
Antimony	27	mg/Kg	**0.32**		0.26	0.14	**0.18**	J	0.01	0.11	**0.12**	J	0.2	0.10	**0.032**		0.19	0.0017
Arsenic	10	mg/Kg	**8.7**		0.13	0.075	**7.0**		0.1	0.061	**6.7**		0.099	0.057	**6.2**		0.094	0.054
Barium	4700	mg/Kg	**48**		1.3	0.79	**34**		1	0.64	**34**		0.99	0.60	**30**		0.94	0.57
Beryllium	2	mg/Kg	**0.54**		0.13	0.093	**0.48**		0.1	0.076	**0.48**		0.099	0.071	**0.42**		0.094	0.067
Cadmium	34	mg/Kg	**0.49**		0.13	0.072	**0.23**		0.1	0.059	**0.20**		0.099	0.055	**0.18**		0.094	0.052
Chromium		mg/Kg	**44**		0.26	0.23	**27**		0.21	0.19	**27**		0.2	0.18	**24**		0.19	0.17
Cobalt		mg/Kg	**5.9**		0.064	0.046	**6.1**		0.052	0.038	**5.6**		0.049	0.036	**5.2**		0.047	0.034
Copper	2500	mg/Kg	**62**		0.39	0.26	**19**		0.31	0.22	**21**		0.3	0.20	**17**		0.28	0.19
Lead	400	mg/Kg	**100**		0.13	0.085	**33**		0.1	0.069	**32**		0.099	0.065	**23**		0.094	0.062
Nickel	1400	mg/Kg	**20**		0.13	0.12	**16**		0.1	0.099	**15**		0.099	0.093	**14**		0.094	0.088
Selenium	340	mg/Kg	**0.61**	J	0.64	0.16	**0.49**	J	0.52	0.13	**0.44**	J	0.49	0.12	**0.41**	J	0.47	0.11
Silver	340	mg/Kg	**0.55**		0.13	0.036	**0.073**	J	0.1	0.029	**0.19**		0.099	0.028	**0.13**		0.094	0.026
Sodium		mg/Kg	**12000**		64	33	**9000**		52	27	**7800**		49	25	**7800**		47	24
Thallium	5.4	mg/Kg	**0.22**		0.13	0.090	**0.19**		0.1	0.073	**0.18**		0.099	0.069	**0.16**		0.094	0.066
Vanadium	470	mg/Kg	**32**		0.13	0.12	**28**		0.1	0.099	**26**		0.099	0.093	**24**		0.094	0.088
Zinc	20000	mg/Kg	**140**	^2	0.64	0.62	**47**	^2	0.52	0.51	**60**	^2	0.49	0.48	**51**	^2	0.47	0.45
Mercury (CVAA)																		
Mercury	20	mg/Kg	**0.43**		0.042	0.027	**0.24**		0.03	0.020	**0.16**		0.028	0.018	**0.092**		0.031	0.020
Chromium																		
Cr (VI)	100	mg/Kg	ND		1.0	0.54	ND		0.86	0.46	ND		0.78	0.41	ND		0.76	0.40
Cr (III)	3900	mg/Kg	**44**		0.5	0.21	**27**		0.5	0.21	**27**		0.5	0.21	**24**		0.5	0.21
TCLP Lead																		
Lead	n/a	mg/L	**0.0039**		0.01	0.0017	**0.031**		0.21	0.0017	**0.033**		0.01	0.0017	ND		0.01	0.099
Cyanide																		
Cyanide, Total	1400	mg/Kg	ND	F1	0.49	0.37	ND		0.4	0.30	ND		0.36	0.27	ND		0.34	0.26
Organochlorine Pesticides (GC)																		
Aldrin		ug/Kg	ND		0.53	0.17	ND		0.45	0.14	**0.045**	J p	0.081	0.025	ND		0.079	0.024
alpha-BHC		ug/Kg	ND		0.53	0.13	ND		0.45	0.11	ND		0.081	0.020	ND		0.079	0.019
beta-BHC		ug/Kg	ND		0.53	0.15	ND		0.45	0.12	ND		0.081	0.022	ND		0.079	0.022
delta-BHC		ug/Kg	**0.33**	J	0.53	0.17	ND		0.45	0.14	ND		0.081	0.026	ND		0.079	0.025
gamma-BHC (Lindane)	20000	ug/Kg	ND		0.53	0.14	ND		0.45	0.11	ND		0.081	0.021	ND		0.079	0.020
cis-Chlordane		ug/Kg	ND		0.53	0.13	ND		0.45	0.11	ND		0.081	0.020	ND		0.079	0.020
trans-Chlordane		ug/Kg	ND		0.53	0.12	ND		0.45	0.10	ND		0.081	0.019	ND		0.079	0.018
4,4'-DDD		ug/Kg	**4.3**		0.53	0.11	ND		0.45	0.093	**0.67**		0.081	0.017	**0.38**		0.079	0.017
4,4'-DDE		ug/Kg	ND		0.53	0.11	ND		0.45	0.091	ND		0.081	0.017	ND		0.079	0.016
4,4'-DDT		ug/Kg	ND		0.53	0.38	ND		0.45	0.32	ND		0.081	0.058	ND		0.079	0.057
Dieldrin	38	ug/Kg	**0.50**	J p	0.53	0.13	ND		0.45	0.11	**0.11**	p	0.081	0.020	**0.073**	J p	0.079	0.020
Endosulfan I		ug/Kg	ND		0.53	0.14	ND		0.45	0.12	ND		0.081	0.022	ND		0.079	0.021
Endosulfan II		ug/Kg	ND		0.53	0.12	ND		0.45	0.098	ND		0.081	0.018	ND		0.079	0.017
Endosulfan sulfate		ug/Kg	ND		0.53	0.25	ND		0.45	0.20	ND		0.081	0.037	ND		0.079	0.036
Endrin	20000	ug/Kg	ND		0.53	0.10	ND		0.45	0.083	ND		0.081	0.015	**0.11**	p	0.079	0.015
Endrin aldehyde		ug/Kg	ND		0.53	0.19	ND		0.45	0.16	ND		0.081	0.029	ND		0.079	0.028
Endrin ketone		ug/Kg	ND		0.53	0.074	ND		0.45	0.061	ND		0.081	0.011	ND		0.079	0.011
Heptachlor	140	ug/Kg	ND		0.53	0.17	ND		0.45	0.14	**0.091**	p	0.081	0.025	ND		0.079	0.025
Heptachlor epoxide	67	ug/Kg	**0.42**	J	0.53	0.14	ND		0.45	0.11	**0.037**	J	0.081	0.021	**0.021**	J p	0.079	0.020
Methoxychlor	340000	ug/Kg	ND		0.53	0.21	ND		0.45	0.17	ND		0.081	0.032	ND		0.079	0.031
Toxaphene	560	ug/Kg	ND		21	14	ND		18	12	ND		3.2	2.2	ND		3.1	2.1

TABLE 1
SEDIMENT ANALYTICAL DATA SUMMARY
CITY PIER
NEW LONDON, CONNECTICUT

		SAMPLE ID:	SOUTH-1				SOUTH-2				SOUTH-3				SOUTH-23			
		LAB ID:	180-138845-1				180-138845-2				180-138845-3				180-138845-4			
		COLLECTION DATE:	05/26/2022 11:00 AM				05/26/2022 3:30 PM				05/26/2022 1:00 PM				05/26/2022 1:00 PM			
		LOCATION:	City Pier				City Pier				City Pier				City Pier			
		SAMPLE MATRIX:	Sediment				Sediment				Sediment				Sediment			
		PROJECT AREA:	New London, Connecticut				New London, Connecticut				New London, Connecticut				New London, Connecticut			
															Duplicate of South-3			
ANALYTE	**CT-RSR-DEC-Residential Thresholds**	**Units**	**Conc**	**Qual**	**RL**	**MDL**	**Conc**	**Qual**	**RL**	**MDL**	**Conc**	**Qual**	**RL**	**MDL**	**Conc**	**Qual**	**RL**	**MDL**
Herbicides (GC)																		
2,4-D	680000	ug/Kg	ND		210	150	ND		170	130	ND		160	120	ND		150	110
2,4,5-T		ug/Kg	ND		52	27	ND		43	23	ND		39	21	ND		38	20
Silvex (2,4,5-TP)		ug/Kg	ND		52	29	ND		43	24	ND		39	22	ND		38	21
Polychlorinated Biphenyls (PCBs) (GC)																		
PCB-1016	1000	ug/Kg	ND		11	3.5	ND		8.8	2.9	ND		8.2	2.7	ND		7.9	2.6
PCB-1221	1000	ug/Kg	ND		11	3.8	ND		8.8	3.1	ND		8.2	2.9	ND		7.9	2.8
PCB-1232	1000	ug/Kg	ND		11	2.6	ND		8.8	2.2	ND		8.2	2.0	ND		7.9	1.9
PCB-1242	1000	ug/Kg	ND		11	1.6	ND		8.8	1.3	ND		8.2	1.2	ND		7.9	1.2
PCB-1248	1000	ug/Kg	ND		11	2.6	ND		8.8	2.1	ND		8.2	2.0	ND		7.9	1.9
PCB-1254	1000	ug/Kg	**43**		11	3.2	ND		8.8	2.6	ND		8.2	2.5	**5.3**	**J p**	7.9	2.4
PCB-1260	1000	ug/Kg	ND		11	3.1	ND		8.8	2.5	ND		8.2	2.3	ND		7.9	2.3
Anions, Ion Chromatography																		
Chloride		mg/Kg	**24000**		64	25	**18000**		54	21	**16000**		49	19	**15000**		0.34	19
Percent Moisture																		
Percent Moisture		%	61.3			0.1	53.5			0.1	49.4			0.1	48.0			0.1
Percent Solids		%	38.7			0.1	46.5			0.1	50.6			0.1	52.0			0.1
Organic Carbon, Total (TOC)																		
Total Organic Carbon - Duplicates		mg/Kg	**48000**		2600	2500	**37000**		2200	2100	**24000**		2000	1900	**22000**		1900	1900
Dioxins and Furans (HRGC/HRMS)																		
2,3,7,8-TCDD		ng/Kg	**1.1**	**J I**	2.5	0.045	**0.084**	**J I**	2.1	0.030	**0.10**	**J I**	1.9	0.028	**0.24**	**J**	1.9	0.023
Alachlor	7700	ug/Kg	ND		2500	470	ND		2000	380	ND		1900	360	ND		1800	340
Simazine		ug/Kg	ND		2500	700	ND		2000	560	ND		1900	530	ND		1800	500
Aldicarb	14000	ug/Kg	ND	H	130	25	ND	H	100	21	ND	H	99	20	ND	H	95	19
Grain Size																		
50 mm (Sieve Size 2 inch)		% Finer	100.0			N/A	100.0			N/A	100.0			N/A				
37.5 mm (Sieve Size 1.5 inch)		% Finer	100.0			N/A	100.0			N/A	100.0			N/A				
25 mm (Sieve Size 1 inch)		% Finer	100.0			N/A	100.0			N/A	100.0			N/A				
9.5 mm (Sieve Size 0.375 inch)		% Finer	100.0			N/A	100.0			N/A	100.0			N/A				
19 mm (Sieve Size 0.75 inch)		% Finer	100.0			N/A	100.0			N/A	100.0			N/A				
4.75 mm (Sieve Size #4)		% Finer	98.8			N/A	100.0			N/A	100.0			N/A				
2 mm (Sieve Size #10)		% Finer	96.8			N/A	99.7			N/A	99.0			N/A				
0.85 mm (Sieve Size #20)		% Finer	96.1			N/A	99.5			N/A	98.7			N/A				
0.425 mm (Sieve Size #40)		% Finer	95.6			N/A	99.2			N/A	98.3			N/A				
0.25 mm (Sieve Size #60)		% Finer	91.0			N/A	96.5			N/A	95.0			N/A				
0.18 mm (Sieve Size #80)		% Finer	83.3			N/A	93.2			N/A	91.7			N/A				
0.15 mm (Sieve Size #100)		% Finer	82.1			N/A	92.5			N/A	90.7			N/A				
0.075 mm (Sieve Size #200)		% Finer	81.2			N/A	92.0			N/A	90.1			N/A				
36.1 um (Hydrometer Reading 1)		% Finer	46.6			N/A	38.3			N/A	43.6			N/A				
22.9 um (Hydrometer Reading 2)		% Finer	39.0			N/A	35.6			N/A	40.0			N/A				
13.4 um (Hydrometer Reading 3)		% Finer	16.0			N/A	27.5			N/A	25.7			N/A				
9.8 um (Hydrometer Reading 4)		% Finer	12.1			N/A	22.1			N/A	22.1			N/A				
6.7 um (Hydrometer Reading 5)		% Finer	12.1			N/A	19.4			N/A	14.9			N/A				
3.3 um (Hydrometer Reading 6)		% Finer	12.1			N/A	11.3			N/A	11.4			N/A				
1.4 um (Hydrometer Reading 7)		% Finer	1.3			N/A	9.0			N/A	11.9			N/A				
Clay		%	12.1			N/A	19.4			N/A	14.9			N/A				
Gravel		%	1.2			N/A	0.0			N/A	0.0			N/A				
Coarse Sand		%	2.0			N/A	0.3			N/A	1.0			N/A				
Fine Sand		%	14.4			N/A	7.2			N/A	8.2			N/A				
Medium Sand		%	1.2			N/A	0.5			N/A	0.7			N/A				
Sand		%	17.6			N/A	8.0			N/A	9.9			N/A				
Silt		%	69.1			N/A	72.6			N/A	75.2			N/A				

NOTES:
Detections are BOLDED
Concentration exceeds CT RSR DEC Residential Thresholds
J - Result is less than the RL but greater than or equal to the MDL and the concentration is an approximate value.
^2 - Calibration Blank (ICB and/or CCB) is outside acceptance limits.
p - The %RPD between the primary and confirmation column/detector is >40%. The lower value has been reported.
F1 - MS and/or MSD recovery exceeds control limits.
I - Value is EMPC (estimated maximum possible concentration).
H - Sample was prepped or analyzed beyond the specified holding time

APPENDIX C
Project Permits

Connecticut Department of
ENERGY &
ENVIRONMENTAL
PROTECTION

79 Elm Street • Hartford, CT 06106-5127 www.ct.gov/deep Affirmative Action/Equal Opportunity Employer

Date April 3, 2023

Michael Carosotto
U.S. Coast Guard Engineering Unit Providence
475 Kilvert Street
Warwick, RI 02886

SUBJECT: **License #202207893-WQC FCC**
1 City Pier, New London

Dear Mr. Carosotto:

Please find attached a copy of your subject license and relevant enclosures which are being issued pursuant to your application. Your attention is directed to the conditions of the license. All work must conform to that which is specifically authorized.

Any work in regulated areas of the State which has not been authorized by a valid license is a violation of state law and subject to enforcement action by the Department of Energy & Environmental Protection and the Office of the Attorney General.

Your initiation of authorized activities will be relied upon as your agreement to comply with the terms and conditions of the license.

If you have not already done so, you should contact your local Planning and Zoning Office and the U. S. Army Corps of Engineers to determine local and federal permit requirements on your project, if any. Write the Corps' New England District, Regulatory Branch, 696 Virginia Road, Concord, MA 01742-2751; http://www.nae.usace.army.mil/ or call 1-800-343-4789.

If you have any questions concerning your permit, please contact me at 860-424-3674 or micheal.grzywinski@ct.gov.

Sincerely,

Micheal Grzywinski, Environmental Analyst III
Land & Water Resources Division
Bureau of Water Protection & Land Reuse

Enc. – License #202207893 (original cover letter, License, LWRD Dredging and General Conditions, Land Record Filing, Work Commencement Form, LWRD Dredging Reporting Formt, Compliance Certificate Form, Plan Set)
cc: File #202207893 (original license; copy cover letter, LWRD Dredging and General Conditions, Land Record Filing, Work Commencement Form, LWRD Dredging Reporting Formt, Compliance Certificate Form, Plan Set)
Certified to: Owners of franchised oyster ground/lessee of leased oyster ground;
First Class to: Adjacent Property Owners;
E-mail to:
Michael Carosotto, Michael.p.carosotto@uscg.mil
Michael Passero, New London Mayor, mpassero@ci.New-London.ct.us
Payson Whitney, PWhitney@trccompanies.com
Heidi Fisher, hfisher@trccompanies.com
Kevin Kotelly, US ACOE, Kevin.R.Kotelly@usace.army.mil, NAE-2022-01990
David Crocker, New London Harbormaster, crockerd64@gmail.com
Karen Michaels, karen.michaels@ct.gov

Connecticut Department of Energy and Environmental Protection License*

Section 401 Water Quality Certification
Federal Coastal Consistency Concurrence

Licensee(s):	United States Coast Guard Civil Engineering Unit Providence
Licensee Address(s):	475 Kilvert Street Warwick, RI 02886
License Number(s):	202207893-WQC FCC
Municipality:	City of New London
Project Description:	Conduct dredging with off-site upland disposal, installation of timber fender piles and berthing camels and infrastructure improvements at City Pier for maritime boating use.
Project Address/Location:	1 City Pier
Waters:	Thames River
Authorizing CT Statute(s) and/or Federal Law:	Section 401 CWA (33 USC 1341); CGS Section 22a-90 to 112; CZMA 307(c)(1), 15 CFR 930
Applicable Regulations of CT State Agencies:	22a-426-1 to 9
Agency Contact:	Land & Water Resources Division, Bureau of Water Protection & Land Reuse, 860-424-3019
License Expiration:	Five (5) years from the date of issuance of this license.
Project Site Plan Set:	"New Home Port for USCGC Eagle," Nine (9) sheets of plans prepared by the United States Coast Guard Civil Engineering Unit Providence, Childs Engineering and Austin Brockenbrough Engineering received August 11, 2022.
License Enclosures:	LWRD Dredging and General Conditions; LWRD Work Commencement Form; LWRD Dredging Report; LWRD Compliance Certification Form; Site Plan Set

*Connecticut's Uniform Administrative Procedure Act defines License to include, "*the whole or part of any agency permit, certificate, approval, registration, charter or similar form of permission required by law . . .*"

Authorized Activities:

The Licensee is hereby authorized to conduct the following work as described in application # 202207893-WQC FCC and as depicted on any site plan sheets / sets cited herein:

1. using mechanical means remove approximately 1,825 cubic yards of materials from an approximately 16,000 square foot area located on the southern side of City Pier to a depth of -20' mean lower low water ("MLLW") and an allowable 2' of over-dredge;
2. dispose of the 2,435 cubic yards of dredged material identified above an at approved off-site upland location;
3. install forty-five (45) 12" diameter timber fender piles along the perimeter of City Pier;
4. install three (3) 8' wide by 12' long foam-filled berthing cushions at three locations along the pier; and
5. install mooring hardware and utility infrastructure upgrades on City Pier.

Failure to comply with the terms and conditions of this license shall subject the Licensee and / or the Licensee's contractor(s) to enforcement actions and penalties as provided by law.

This license is subject to the following Terms and Conditions:

1. **License Enclosure(s) and Conditions.** The Licensee shall comply with all applicable terms and conditions as may be stipulated within the License Enclosure(s) listed above.
2. The Licensee shall dispose of the approximately 2,435 cubic yards of material in accordance with all applicable requirements of Chapter 446k Water Pollution Control, Chapter 445 Hazardous Waste, and Chapter 446d Solid Waste of the Connecticut General Statutes.
3. All unconfined in-water work shall be prohibited between February 1st through June 30th, inclusive, of any calendar year in order to protect spawning winter flounder and diadromous finfish unless otherwise authorized in writing from the Commissioner.
4. Prior to the commencement of the work authorized herein the Licensee shall obtain all necessary local, state and federal authorizations for the work authorized by this license.
5. All waste material generated by the performance of the work authorized herein shall be disposed of by the Licensee at an upland site approved for the disposal of such waste materials, as applicable. The Licensee shall ensure that no waste material enters the Thames River and must immediately remove any debris that enters the water.
6. On or before ninety (90) days after completion of the work authorized herein, the Licensee shall submit to the Commissioner an "as-dredged" survey of the work area showing contours, bathymetries, tidal datums, including any proposed elevation views and cross sections included in the license. Such plans or survey shall be the originals and be signed and sealed by an engineer, surveyor or architect, as applicable, who is licensed in the State of Connecticut.
7. All work authorized herein shall be conducted using either land-based or water-based equipment. At no time shall the Licensee allow the barge or equipment to rest on the substrate. Any such barge must move to deeper waters during periods of low water in the

area of the proposed activity. It shall not be a defense to this provision for the Licensee to assert that it has no control over the operation of the barge.

Issued under the authority of the Commissioner of Energy and Environmental Protection on:

March 31, 2023
Date

Tracy R. Babbidge
Tracy Babbidge
Acting Deputy Commissioner
Department of Energy & Environmental Protection

LWRD Dredging and General Conditions

1. **Time-of-Year Restriction.** Unless otherwise noted in the License, unconfined in-water excavation, dredging, filling or removal of debris or other material is prohibited, inclusive, in any year from June 1 through September 30 in order to protect spawning shellfish in the area unless otherwise authorized in writing by the Commissioner.

2. **Dredging Report.** Not later than two (2) weeks subsequent to the completion of any dredging activity authorized herein, the Licensee shall submit to DEEP.LWRDRegulatory@ct.gov a completed Dredging Report. A separate form shall be submitted by the Licensee for each distinct dredging activity conducted pursuant to this license.

3. **Bottom Disturbance.** Dragging the bottom with a spoil barge, scow, vessel, beam or similar equipment outside of any authorized area is prohibited.

4. **Material Handling.** Sidecasting or in-water rehandling of dredged or excavated material is prohibited.

5. **Barge Control.** Spoil scows or barges shall be loaded and navigated in a manner which prevents uncontrollable motion or spillage and washout of dredged or excavated materials.

6. **Sale of Sediment.** Sediment dredged pursuant to the license shall not be sold nor shall any fee for its use be charged without the express prior written authorization of the Commissioner and payment of a $4.00 per yard royalty to the state of Connecticut Department of Energy & Environmental Protection, pursuant to CGS section 22a-361(e).

7. **Sediment Disposal.** The Licensee shall dispose of aquatic sediments in accordance with the terms and conditions of the license.

8. **Submission of As-Dredged Plans**. On or before ninety (90) days after completion of the work authorized herein, the Licensee shall submit to DEEP.LWRDRegulatory@ct.gov an "as-dredged" survey of the work area showing contours, bathymetries, tidal datums and structures, as applicable. Such survey shall be the original one and be signed and sealed by an engineer, surveyor or architect, as applicable, who is licensed in the State of Connecticut.

Open Water Disposal, if authorized in Project Description

1. **Material Disposal.** The Licensee shall dispose of dredged or excavated material in accordance with the requirements of the United States Army Corps of Engineers-New England District, except that if the authorized disposal site is modified, the Licensee shall submit a request for modification of the location to the Commissioner and shall not dispose of the material until such location modification has been approved in writing by the Commissioner.

2. **Disposal Site / Use Modification.** The Commissioner may modify the authorized disposal site and direct dredged sediment to an alternate site for use as cap material, provided that no modification will take effect if such modification imposes uncompensated additional costs solely attributable to such modification on the Licensee.

3. **Disposal Monitoring.** The Licensee shall not dispose of dredged or excavated material unless said disposal is supervised and witnessed by an on-board inspector or documented by an automated disposal monitoring program approved by the United States Army Corps of Engineers-New England District.

4. **Barge Navigation.** Spoil scows or barges used by the Licensee for disposal of dredged or excavated material shall travel to and from the authorized disposal site utilizing sea lanes defined by the United States Army Corps of Engineers-New England District.

5. **Point Dumping.** The Licensee shall point-dump dredged or excavated materials at a specified buoy or set of coordinates identified by United States Army Corps of Engineers-New England District within the authorized disposal site.

LWRD General Conditions

1. **Land Record Filing.** The Licensee shall file the Land Record Filing on the land records of the municipality in which the subject property is located not later than thirty (30) days after license issuance pursuant to Connecticut General Statutes (CGS) Section 22a-363g. A copy of the Notice with a stamp or other such proof of filing with the municipality shall be submitted to DEEP.LWRDRegulatory@ct.gov no later than sixty (60) days after license issuance. If a Land Record Filing form is not enclosed and the work site is not associated with an upland property, no filing is required.

2. **Contractor Notification.** The Licensee shall give a copy of the license and its attachments to the contractor(s) who will be carrying out the authorized activities prior to the start of construction and shall receive a written receipt for such copy, signed and dated by such contractor(s). The Licensee's contractor(s) shall conduct all operations at the site in full compliance with the license and, to the extent provided by law, may be held liable for any violation of the terms and conditions of the license. At the work site, the contractor(s) shall, whenever work is being performed, have on site and make available for inspection a copy of the license and the authorized plans.

3. **Work Commencement.** Not later than two (2) weeks prior to the commencement of any work authorized herein, the Licensee shall submit to DEEP.LWRDRegulatory@ct.gov, on the Work Commencement Form attached hereto, the name(s) and address(es) of all contractor(s) employed to conduct such work and the expected date for commencement and completion of such work, if any.

    - For water diversion activities authorized pursuant to 22a-377(c)-1 of the Regulations of Connecticut State Agencies, the Licensee shall also notify the Commissioner in writing two weeks prior to initiating the authorized diversion.
    - For emergency activities authorized pursuant Connecticut General Statutes Section

22a-6k, the Licensee shall notify the Commissioner, in writing, of activity commencement at least one (1) day prior to construction and of activity completion no later than five (5) days after conclusion.

4. **License Notice.** The Licensee shall post the first page of the License in a conspicuous place at the work area while the work authorized therein is undertaken.

5. **Unauthorized Activities.** Except as specifically authorized, no equipment or material, including but not limited to, fill, construction materials, excavated material or debris, shall be deposited, placed or stored in any wetland or watercourse on or off-site. The Licensee may not conduct work within wetlands or watercourses other than as specifically authorized, unless otherwise authorized in writing by the Commissioner. Tidal wetlands means "wetland" as defined by section 22a-29 and "freshwater wetlands and watercourses" means "wetlands" and "watercourses" as defined by section 22a-38.

6. **Excavated Materials.** Unless otherwise authorized, all excavated material shall be staged and managed in a manner which prevents additional impacts to wetlands and watercourses.

7. **Best Management Practices.** The Licensee shall not cause or allow pollution of any wetlands or watercourses, including pollution resulting from sedimentation and erosion. In constructing or maintaining any authorized structure or facility or conducting any authorized activity, or in removing any such structure or facility, the Licensee shall employ best management practices to control storm water discharges, to prevent erosion and sedimentation, and to otherwise prevent pollution of wetlands and other waters of the State. For purposes of the license, "pollution" means "pollution" as that term is defined by CGS section 22a-423. Best Management Practices include, but are not limited, to practices identified in the *Connecticut Guidelines for Soil Erosion and Sediment Control* as revised, *2004 Connecticut Stormwater Quality Manual*, Department of Transportation's *ConnDOT Drainage Manual* as revised, and the Department of Transportation Standard Specifications as revised.

8. **In-Water Work Vessel Staging and Storage. (for Structures Dredging & Fill, Tidal *Wetlands*, *Certificate of Permission*, and *Long Island Sound General Permit* Licenses only).** For any barge, vessel, skiff or floating work platform ("work vessels") utilized in the execution of the work authorized herein, the Licensee shall ensure that such work vessels:
   - do not rest on, or come in contact with, the substrate at any time, unless specifically authorized in the license.
   - are not stored over intertidal flats, submerged aquatic vegetation or tidal wetland vegetation or in a location that interferes with navigation. In the event any work vessel is grounded, no dragging or prop dredging shall occur to free it.

9. **Work Site Restoration.** Upon completion of any authorized work, the Licensee shall restore all areas impacted by construction, or used as a staging area or accessway in connection with such work, to their condition prior to the commencement of such work.

10. **Inspection.** The Licensee shall allow any representative of the Commissioner to inspect the project location at reasonable times to ensure that work is being or has been conducted in accordance with the terms and conditions of this license.

11. Change of Use. (Applies only if a use is specified within the License "*Project Description*")

a. The work specified in the license is authorized solely for the purpose set forth in the license. No change in purpose or use of the authorized work or facilities as set forth in the license may occur without the prior written approval of the Commissioner. The Licensee shall, prior to undertaking or allowing any change in use or purpose from that which is authorized by this license, request permission from the Commissioner for such change. Said request shall be in writing and shall describe the proposed change and the reason for the change.

b. A change in the form of ownership of any structure authorized herein from a rental/lease commercial marina to a wholly-owned common interest community or dockominium may constitute a change in purpose as specified in paragraph (a) above.

12. De Minimis Alteration. The Licensee shall not deviate from the authorized activity without prior written approval from the Commissioner. The Licensee may request a de minimis change to any authorized structure, facility, or activity. A de minimis alteration means a change in the authorized design, construction or operation that individually and cumulatively has minimal additional environmental impact and does not substantively alter the project as authorized.

- For diversion activities authorized pursuant to 22a-377(c)-2 of the Regulations of Connecticut State Agencies, a de minimis alteration means an alteration which does not significantly increase the quantity of water diverted or significantly change the capacity to divert water.

13. Extension Request. The Licensee may request an extension of the license expiration date. Such request shall be in writing and shall be submitted to DEEP.LWRDRegulatory@ct.gov at least thirty (30) days prior to the license expiration. Such request shall describe the work done to date, what work still needs to be completed, and the reason for such extension. The Commissioner may extend the expiration date of this license for a period of up to one year, in order for the Licensee to complete the authorized activities. It shall be at the Commissioner's sole discretion to grant or deny such request. No more than three (3) one-year extensions will be granted under this license.

14. No Work After License Expiration. Work conducted after the license expiration date is a violation of the license and may subject the licensee to enforcement action, including penalties, as provided by law.

15. License Transfer. The license is not transferable without prior written authorization of the Commissioner. A request to transfer a license shall be submitted in writing and shall describe the proposed transfer and the reason for such transfer. The Licensee's obligations under the license shall not be affected by the passage of title to the license site to any other person or municipality until such time as a transfer is approved by the Commissioner.

16. Document Submission. Any document required to be submitted to the Commissioner under the license or any contact required to be made with the Commissioner shall, unless otherwise specified in writing by the Commissioner, be directed to:

DEEP.LWRDRegulatory@ct.gov or

Regulatory Section
Land & Water Resources Division
Department of Energy and Environmental Protection
79 Elm Street
Hartford, Connecticut 06106-5127
860-424-3019

17. **Date of Document Submission.** The date of submission to the Commissioner of any document required by the license shall be the date such document is received by the Commissioner. The date of any notice by the Commissioner under the license, including but not limited to notice of approval or disapproval of any document or other action, shall be the date such notice is personally delivered or the date three (3) days after it is mailed by the Commissioner, whichever is earlier. Except as otherwise specified in the license, the word "day" as used in the license means calendar day. Any document or action which is required by the license to be submitted or performed by a date which falls on a Saturday, Sunday or a Connecticut or federal holiday shall be submitted or performed on or before the next day which is not a Saturday, Sunday, or a Connecticut or federal holiday.

18. **Certification of Documents.** Any document, including but not limited to any notice, which is required to be submitted to the Commissioner under the license shall be signed by the Licensee and by the individual or individuals responsible for actually preparing such document, each of whom shall certify in writing as follows: "I have personally examined and am familiar with the information submitted in this document and all attachments and certify that based on reasonable investigation, including my inquiry of those individuals responsible for obtaining the information, the submitted information is true, accurate and complete to the best of my knowledge and belief, and I understand that any false statement made in this document or its attachments may be punishable as a criminal offense."

19. **Accuracy of Documentation.** In evaluating the application for the license, the Commissioner has relied on information and data provided by the Licensee and on the Licensee's representations concerning site conditions, design specifications and the proposed work, including but not limited to representations concerning the commercial, public or private nature of the work or structures, the water-dependency of said work or structures, its availability for access by the general public, and the ownership of regulated structures or filled areas. If such information proves to be false, deceptive, incomplete or inaccurate, the license may be modified, suspended or revoked, and any unauthorized activities may be subject to enforcement action.

20. **Limits of Liability.** In granting the license, the Commissioner has relied on all representations of the Licensee, including information and data provided in support of the Licensee's application. Neither the Licensee's representations nor the issuance of the license shall constitute an assurance by the Commissioner as to the structural integrity, the engineering feasibility or the efficacy of such design.

21. **Reporting of Violations.** In the event that the Licensee becomes aware that they did not or

may not comply, or did not or may not comply on time, with any provision of this license or of any document incorporated into the license, the Licensee shall immediately notify the agency contact specified within the license and shall take all reasonable steps to ensure that any noncompliance or delay is avoided or, if unavoidable, is minimized to the greatest extent possible. In so notifying the agency contact, the Licensee shall provide, for the agency's review and written approval, a report including the following information:

a. the provision(s) of the license that has been violated;

b. the date and time the violation(s) was first observed and by whom;

c. the cause of the violation(s), if known;

d. if the violation(s) has ceased, the duration of the violation(s) and the exact date(s) and times(s) it was corrected;

e. if the violation(s) has not ceased, the anticipated date when it will be corrected;

f. steps taken and steps planned to prevent a reoccurrence of the violation(s) and the date(s) such steps were implemented or will be implemented; and

g. the signatures of the Licensee and of the individual(s) responsible for actually preparing such report.

If the violation occurs outside of normal business hours, the Licensee shall contact the Department of Energy and Environmental Protection Emergency Dispatch at 860-424-3333. The Licensee shall comply with any dates which may be approved in writing by the Commissioner.

22. **Revocation/Suspension/Modification.** The license may be revoked, suspended, or modified in accordance with applicable law.

23. **Other Required Approvals.** License issuance does not relieve the Licensee of their obligations to obtain any other approvals required by applicable federal, state and local law.

24. **Rights.** The license is subject to and does not derogate any present or future property rights or powers of the State of Connecticut, and conveys no property rights in real estate or material nor any exclusive privileges, and is further subject to any and all public and private rights and to any federal, state or local laws or regulations pertinent to the property or activity affected hereby.

25. **Condition Conflicts.** In the case where a project specific special condition listed on the license differs from, or conflicts with, one of the general conditions listed herein, the project specific special condition language shall prevail. It is the licensee's responsibility to contact the agency contact person listed on the license for clarification if needed prior to conducting any further regulated activities.

LWRD Work Commencement Form

To: DEEP.LWRDRegulatory@ct.gov or
Regulatory Section
Department of Energy and Environmental Protection
Land & Water Resources Division
79 Elm Street
Hartford, CT 06106-5127

Licensee Name: _____
Municipality in which the project is occurring: _____
DEEP License No(s):_____

CONTRACTOR(s):

1 Name: _____
Address: _____
Telephone: _____
E-mail: _____

2 Name: _____
Address: _____
Telephone: _____
E-mail: _____

3 Name: _____
Address: _____
Telephone: _____
E-mail: _____

Date Contractor(s) received a copy
of the license and approved plans: _____

EXPECTED DATE OF COMMENCEMENT OF WORK: _____

EXPECTED DATE OF COMPLETION OF WORK: _____

LICENSEE: _____ _____
(Signature) (Date)

Connecticut Department of
ENERGY &
ENVIRONMENTAL
PROTECTION

79 Elm Street • Hartford, CT 06106-5127 portal.ct.gov/DEEP Affirmative Action/Equal Opportunity Employer

LWRD DREDGING REPORT

(To be completed by Licensee)

License No(s).: _____
Licensee Name: _____
Address of Dredging Activity: _____
_____

Dredging Contractor Information:
Name: _____
Mailing Address: _____
Business Phone: _____
Contact Person: _____
E-mail: _____

Dates Dredged: _____
Total Volume Dredged during this period: _____
Disposal Volume(s) and Location(s): _____
_____

**If any portion of the dredged materials was used in a beneficial manner, please identify the beneficial use type (i.e. beach nourishment, habitat restoration, landfill cap, construction materials…), volume of dredged material utilized and the location of beneficial usage.

_____
_____
_____
_____

Document Certification:
"I have personally examined and am familiar with the information submitted in this document and all attachments and certify that based on reasonable investigation, including my inquiry of those individuals responsible for obtaining the information, the submitted information is true, accurate and complete to the best of my knowledge and belief, and I understand that any false statement made in this document or its attachments may be punishable as a criminal offense."

_____ _____
Signature of Licensee Date

If you have any questions pertaining to this form, please contact the Land & Water Resources Division at 860-424-3034.
Return to:
DEEP.LWRDRegulatory@ct.gov or
Land & Water Resources Division
State of Connecticut Department of Energy & Environmental Protection
79 Elm Street
Hartford, CT 06106-5127

Connecticut Department of
ENERGY & ENVIRONMENTAL PROTECTION

79 Elm Street • Hartford, CT 06106-5127 portal.ct.gov/DEEP Affirmative Action/Equal Opportunity Employer

Compliance Certification Form

The following certification must be signed by the licensee working in consultation with a Connecticut-licensed design professional and must be submitted to the address indicated at the end of this form within ninety (90) days of completion of the authorized work.

1. Licensee Name: _____

   DEEP License Number(s):_____

   Municipality in which project is occurring:_____

2. **Check one:**

   (a) ☐ "I certify that the final site conditions and / or structures are in general conformance with the approved site plans". Identify and describe any deviations and attach to this form.

   (b) ☐ "The final site conditions and / or structures are not in general conformance with the approved site plans. The enclosed "as-built" plans note the modifications".

3. "I understand that any false statement in this certification is punishable as a criminal offence under section 53a-157b of the General Statutes and under any other applicable law."

_____ _____
Signature of Licensee Date

_____
Name of Licensee (print or type)

_____ _____
Signature of CT-Licensed Design Professional Date

_____
Name of CT-Licensed Design Professional (print or type)

_____
Professional License Number (if applicable) Affix Stamp Here

- As-built plans shall include: elevations or tidal datums, as applicable, and structures, including any proposed elevation views and cross sections included in the approved license plans. Such as-built plans shall be the original ones and be signed and sealed by an engineer, surveyor or architect, as applicable, who is licensed in the State of Connecticut.
- The Licensee will be notified by staff of the Land and Water Resources Division (LWRD) if further compliance review is necessary. Lack of response by LWRD staff does not imply compliance.

Submit this completed form to :
DEEP.LWRDRegulatory@ct.gov or
Regulatory Section
Department of Energy and Environmental Protection
Land & Water Resources Division
79 Elm Street
Hartford, CT 06106-5127

U.S. COAST GUARD
CIVIL ENGINEERING
CEU PROVIDENCE

CHILDS ENGINEERING

Austin Brockenbrough
ENGINEERING · CONSULTING
1011 Boulder Springs Drive, Suite 200 | Richmond, Virginia 23225
804.592.3900 *main* | 804.592.3901 *fax*
www.brockenbrough.com

NEW HOME PORT FOR USCGC EAGLE
NEW LONDON, CONNECTICUT
PROJECT NUMBER 16192309

DRAWING INDEX

VICINITY MAP
SCALE: NTS

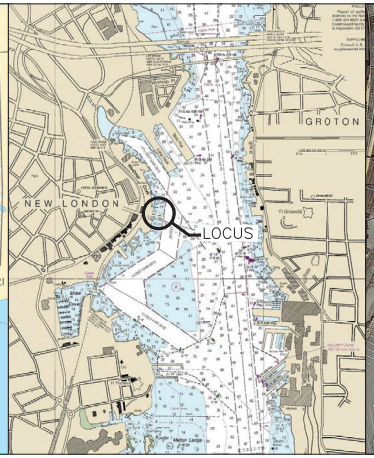

LOCATION MAP
SCALE: NTS

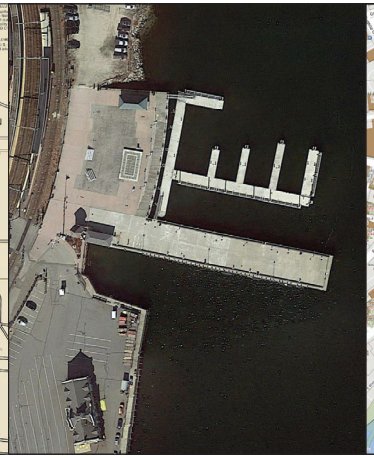

PHOTO
SCALE: NTS

PROPERTY MAP
SCALE: NTS

FOR PERMITTING ONLY
NOT FOR CONSTRUCTION

MICHAEL P. CAROSOTTO MM/DD/YYYY
APPROVING OFFICER DATE

MICHAEL P. CAROSOTTO
TECHNICAL DIRECTOR

WILLLIAM BOGER/DAVID GLASS
BRANCH CHIEF

U.S.C.G. CE
U.S. COAST GUARD
CIVIL ENGINEERING

MARK	DESCRIPTION	DATE

PLOTTING SCALE:1:1 | SCALE:AS SHOWN

A/E COMPANY:
CHILDS ENGINEERING CORPORATION
31 BIG ROCK DRIVE
BELLINGHAM, MA
(508)966-9092
A/E PROJECT NO.:
2955-2101
CONSULTING A/E:

CIVIL ENGINEERING UNIT PROVIDENCE
475 KILVERT ST., SUITE 100
WARWICK, RI 02886
PROJECT ENGINEER:
NILSON, ANDREW
DESIGNED BY:
EDITED BY: ARN
DRAWN BY:
CHECKED BY: CMR

USCG PROJECT NO.
16192309
USCG DRAWING NO.
16192309001
USCG FILENAME
16192309001.DWG
SHEET 01 OF 15

NEW HOME PORT
FOR USCGC EAGLE
NEW LONDON CT
GENERAL
COVER SHEET

SHEET ID
CITY PIER
G-001

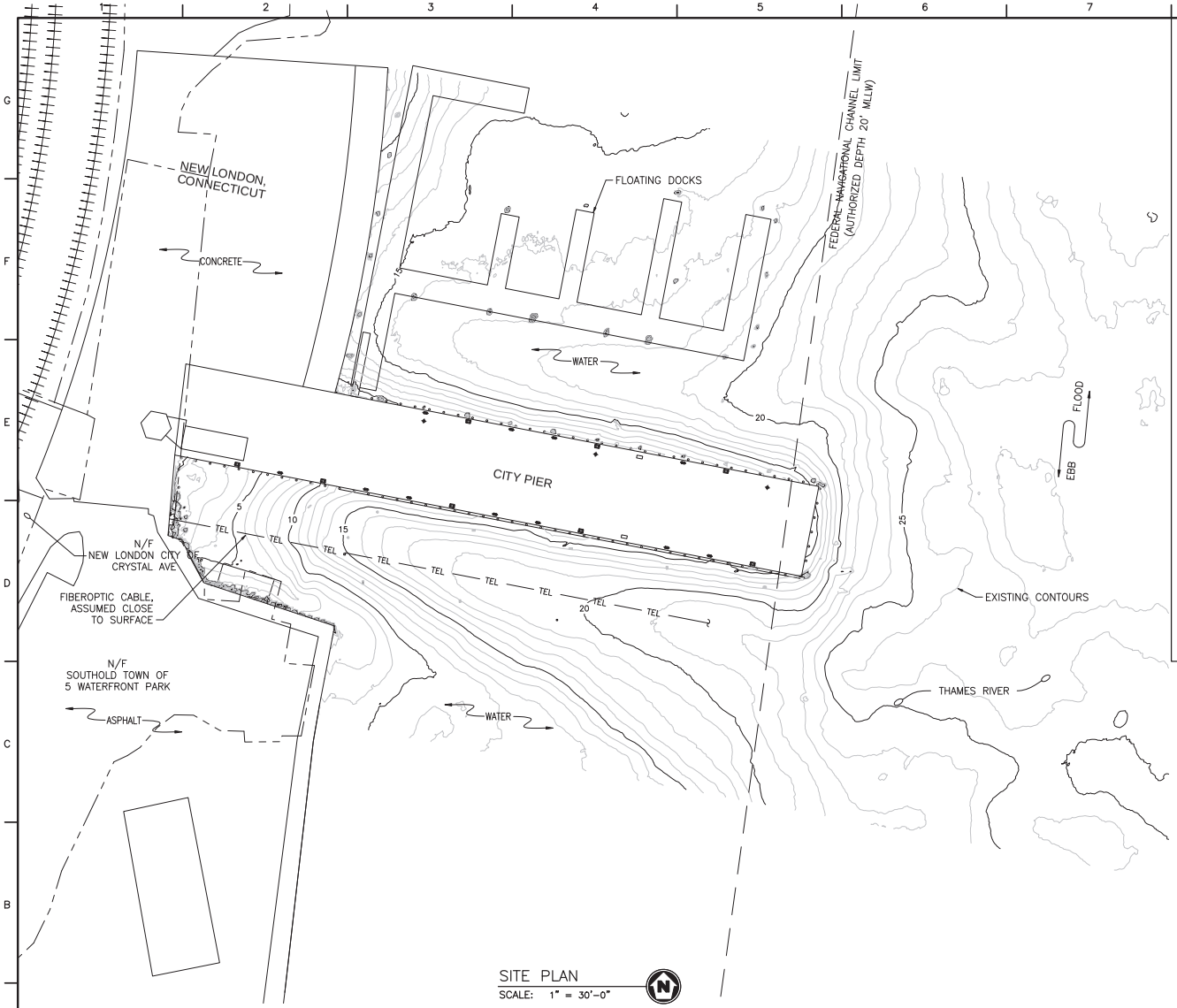

SITE PLAN
SCALE: 1" = 30'-0"

GRAPHIC SCALE
30 0 15 30 60 120
(IN FEET)
1 inch = 30 ft.

NOTES:

1. GRID SYSTEM IS IN FEET AND IS THE CONNECTICUT STATE PLANE COORDINATE SYSTEM, NAD83.
2. DEPTHS ARE IN FEET AND ARE REFERENCED TO MEAN LOWER LOW WATER (MLLW) BASED ON NOAA PRELIMINARY WATER LEVEL DATA AT NEW LONDON (STATION ID 8461490). DEPTHS WERE DEVELOPED FROM ONE FOOT BY ONE FOOT BINNED DATA WITH THE AVERAGE DEPTH WITHIN EACH BIN POSTED IN THE CENTER OF THE BIN.
3. SHORELINE AND ONSHORE FEATURES ARE APPROXIMATE AND WERE TAKEN FROM DIGITAL ORTHOPHOTO QUADRANGLES FLOWN IN 2019 AND OBTAINED FROM CONNECTICUT ENVIRONMENTAL CONDITIONS ONLINE (CT ECO).
4. THE INFORMATION PRESENTED ON THIS DRAWING REPRESENTS THE RESULTS OF A MULTIBEAM SURVEY PERFORMED BY OCEAN SURVEYS, INC. ON 17 SEPTEMBER 2021 AND CAN ONLY BE CONSIDERED AS INDICATING THE CONDITIONS EXISTING AT THAT TIME. REUSE OF THIS INFORMATION BY CLIENT OR OTHERS BEYOND THE SPECIFIC SCOPE OF WORK FOR WHICH IT WAS ACQUIRED SHALL BE AT THE SOLE RISK OF THE USER AND WITHOUT LIABILITY TO OSI.
5. PROJECT LOCATED ENTIRELY WITHIN FLOOD ZONE VE: 1% ANNUAL CHANCE FLOOD HAZARD, BASE FLOOD ELEVATION 14', FROM FEMA FIRM NO. 09011C0502J, EFFECTIVE DATE 08/05/2013, AND MARINE DEEPWATER HABITAT (E1UBL).

DATUM

MHW = 2.89'
MLW = 0.35'
MLLW = 0.00'

FOR PERMITTING ONLY
NOT FOR CONSTRUCTION

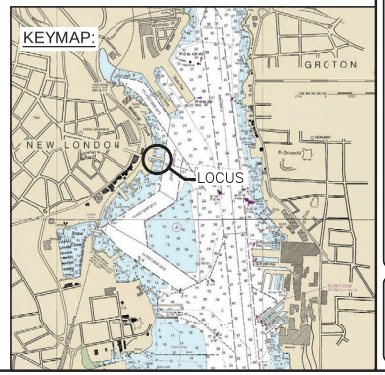

U.S.C.G.
US COAST GUARD
CIVIL ENGINEERING

MARK	DESCRIPTION	DATE

PLOTTING SCALE:1:1 | SCALE:AS SHOWN

A/E COMPANY:
CHELDS ENGINEERING CORPORATION
BELLINGHAM, MA
(508)966-9092
A/E PROJECT NO.: 2645-16.16
CONSULTING A/E:

CIVIL ENGINEERING UNIT PROVIDENCE
475 KILVERT ST., SUITE 100
(401)291-5286
PROJECT ENGINEER: NILSON, ANDREW
DESIGNED BY: CHE
DRAWN BY: CHE
EDITED BY: ARN
CHECKED BY: CMR

USCG PROJECT NO. 16192309
USCG DRAWING NO. 16192309002
USCG FILENAME 16192309002.DWG
SHEET 02 OF 15

NEW HOME PORT
FOR USCGC EAGLE
NEW LONDON CT
CIVIL
SITE PLAN

SHEET ID
CITY PIER
C-101

1234-5267-0003 for Design Build Projects
6789-9287-1200 for Design Build Projects

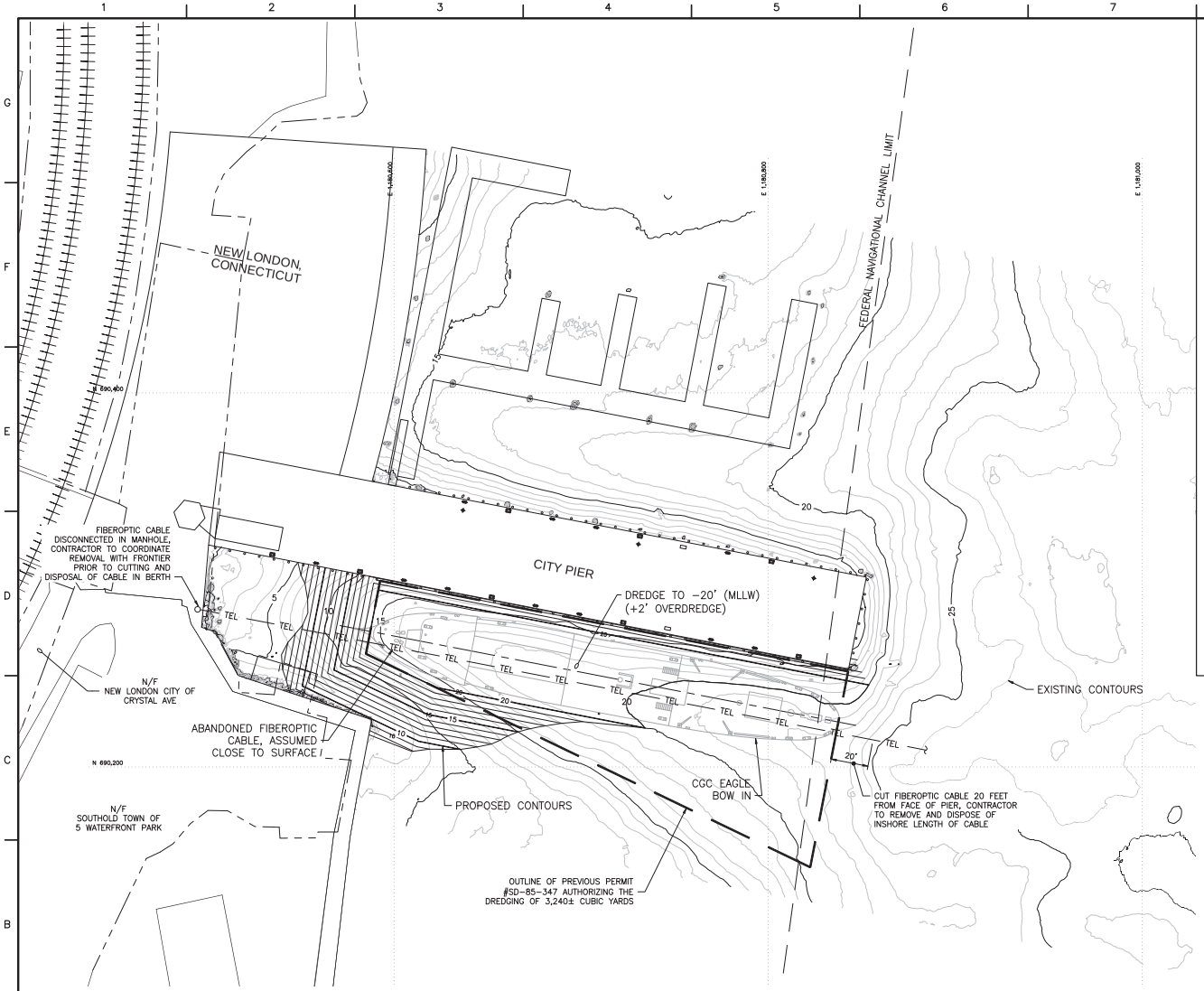

DREDGE PLAN
SCALE: 1" = 30'−0"

GRAPHIC SCALE
30 0 15 30 60 120
(IN FEET)
1 inch = 30 ft.

NOTES:

1. GRID SYSTEM IS IN FEET AND IS THE CONNECTICUT STATE PLANE COORDINATE SYSTEM, NAD83.
2. DEPTHS ARE IN FEET AND ARE REFERENCED TO MEAN LOWER LOW WATER (MLLW) BASED ON NOAA PRELIMINARY WATER LEVEL DATA AT NEW LONDON (STATION ID 8461490). DEPTHS WERE DEVELOPED FROM ONE FOOT BY ONE FOOT BINNED DATA WITH THE AVERAGE DEPTH WITHIN EACH BIN POSTED IN THE CENTER OF THE BIN.
3. SHORELINE AND ONSHORE FEATURES ARE APPROXIMATE AND WERE TAKEN FROM DIGITAL ORTHOPHOTO QUADRANGLES FLOWN IN 2019 AND OBTAINED FROM CONNECTICUT ENVIRONMENTAL CONDITIONS ONLINE (CT ECO).
4. THE INFORMATION PRESENTED ON THIS DRAWING REPRESENTS THE RESULTS OF A MULTIBEAM SURVEY PERFORMED BY OCEAN SURVEYS, INC. ON 17 SEPTEMBER 2021 AND CAN ONLY BE CONSIDERED AS INDICATING THE CONDITIONS EXISTING AT THAT TIME. REUSE OF THIS INFORMATION BY CLIENT OR OTHERS BEYOND THE SPECIFIC SCOPE OF WORK FOR WHICH IT WAS ACQUIRED SHALL BE AT THE SOLE RISK OF THE USER AND WITHOUT LIABILITY TO OSI.
5. THE CONTRACTOR WILL DREDGE TO THE DEPTH SHOWN AND DISPOSE OF THE MATERIAL AT AN APPROVED UPLAND SITE IN ACCORDANCE WITH THE PERMITS.
6. PROJECT LOCATED ENTIRELY WITHIN FLOOD ZONE VE: 1% ANNUAL CHANCE FLOOD HAZARD, BASE FLOOD ELEVATION 14', FROM FEMA FIRM NO. 09011C0502J, EFFECTIVE DATE 08/05/2013, AND MARINE DEEPWATER HABITAT (E1UBL).

DATUM

MHW = 2.89'

MLW = 0.35'

MLLW = 0.00'

APPROXIMATE DREDGE VOLUMES
TO EL. −20' = 1,825 CU YDS
TO EL. −22' = 2,435 CU YDS

FOR PERMITTING ONLY
NOT FOR CONSTRUCTION

KEYMAP:

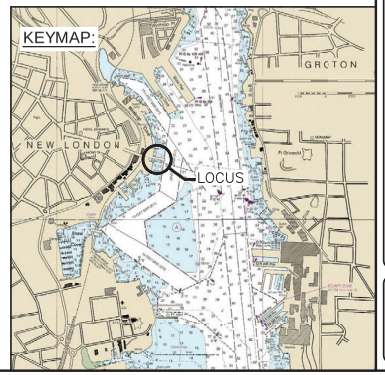

U.S.C.G.
US COAST GUARD
CIVIL ENGINEERING

MARK	DESCRIPTION	DATE

PLOTTING SCALE:1:1 | SCALE:AS SHOWN

A/E COMPANY:
CHELDS ENGINEERING CORPORATION
BELLINGHAM, MA
(508)966-9082
A/E PROJECT NO.: 2645-16.16
CONSULTING A/E:

CIVIL ENGINEERING UNIT PROVIDENCE
475 KILVERT ST., SUITE 100
(401)528-5585
PROJECT ENGINEER: NILSON, ANDREW
DRAWN BY: CTC
DESIGNED BY: CMR
CHECKED BY: CMR
EDIT BY: ARN

USCG PROJECT NO. 16192309
USCG DRAWING NO. UR-02-32-0403
USCG FILENAME 16192309d03.DWG
SHEET 03 OF 15

NEW HOME PORT
FOR USCGC EAGLE
NEW LONDON CT
CIVIL
PROPOSED DREDGE PLAN

SHEET ID
CITY PIER
C−102

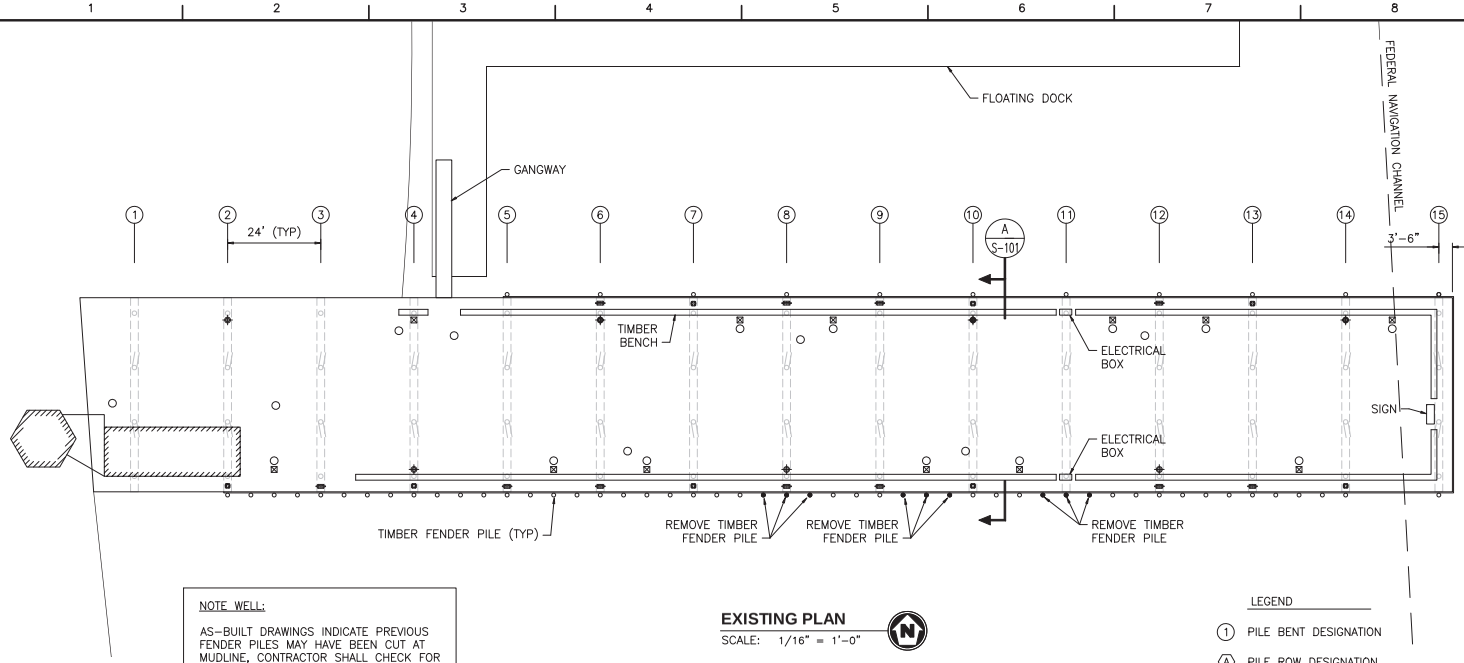

NOTE WELL:

AS-BUILT DRAWINGS INDICATE PREVIOUS FENDER PILES MAY HAVE BEEN CUT AT MUDLINE, CONTRACTOR SHALL CHECK FOR OBSTRUCTIONS AS PART OF DEMOLITION.

EXISTING PLAN

SCALE: 1/16" = 1'-0"

GRAPHIC SCALE

(IN FEET)
1 inch = 16 ft.

LEGEND

- (1) PILE BENT DESIGNATION
- (A) PILE ROW DESIGNATION
- STEEL PIPE PILE
- STEEL PIPE BATTER PILE
- MOORING BOLLARD
- MOORING CLEAT
- LIGHT POLE
- LIGHTED MARINE POWER BOLLARD
- ELECTRICAL HANDHOLE
- TIMBER FENDER PILE TO BE REMOVED

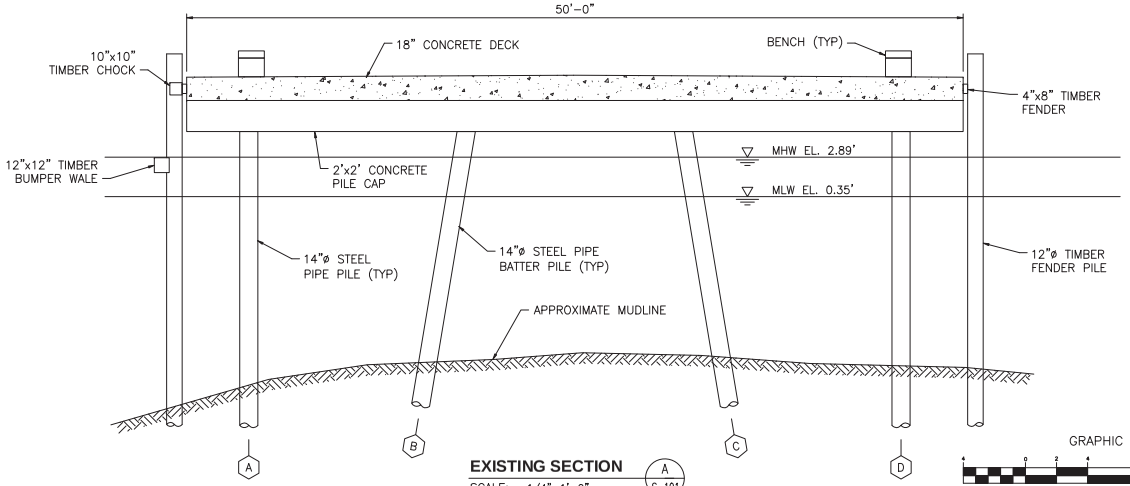

EXISTING SECTION (A / S-101)

SCALE: 1/4"=1'-0"

GRAPHIC SCALE

(IN FEET)
1 inch = 4 ft.

NOTES:

1. GRID SYSTEM IS IN FEET AND IS THE CONNECTICUT STATE PLANE COORDINATE SYSTEM, NAD83.
2. DEPTHS ARE IN FEET AND ARE REFERENCED TO MEAN LOWER LOW WATER (MLLW) BASED ON NOAA PRELIMINARY WATER LEVEL DATA AT NEW LONDON (STATION ID 8461490). DEPTHS WERE DEVELOPED FROM ONE FOOT BY ONE FOOT BINNED DATA WITH THE AVERAGE DEPTH WITHIN EACH BIN POSTED IN THE CENTER OF THE BIN.
3. SHORELINE AND ONSHORE FEATURES ARE APPROXIMATE AND WERE TAKEN FROM DIGITAL ORTHOPHOTO QUADRANGLES FLOWN IN 2019 AND OBTAINED FROM CONNECTICUT ENVIRONMENTAL CONDITIONS ONLINE (CT ECO).
4. THE INFORMATION PRESENTED ON THIS DRAWING REPRESENTS THE RESULTS OF A MULTIBEAM SURVEY PERFORMED BY OCEAN SURVEYS, INC. ON 17 SEPTEMBER 2021 AND CAN ONLY BE CONSIDERED AS INDICATING THE CONDITIONS EXISTING AT THAT TIME. REUSE OF THIS INFORMATION BY CLIENT OR OTHERS BEYOND THE SPECIFIC SCOPE OF WORK FOR WHICH IT WAS ACQUIRED SHALL BE AT THE SOLE RISK OF THE USER AND WITHOUT LIABILITY TO OSI.

FOR PERMITTING ONLY
NOT FOR CONSTRUCTION

KEYMAP:

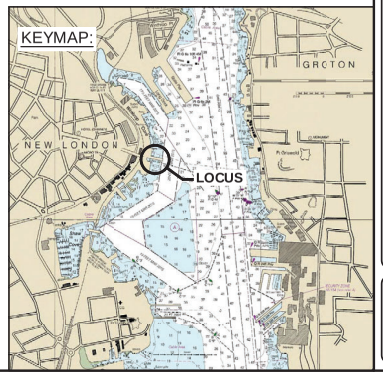

U.S.C.G.
US COAST GUARD
CIVIL ENGINEERING

MARK	DESCRIPTION	DATE

PLOTTING SCALE:1:1
SCALE:AS SHOWN

A/E COMPANY:
FIELDS ENGINEERING CORPORATION
BELLINGHAM, MA
(508)966-9092
A/E PROJECT NO.: 2645-16.16
CONSULTING A/E:

CIVIL ENGINEERING UNIT PROVIDENCE
475 KILVERT ST., SUITE 100
WARWICK, RI 02886

PROJECT ENGINEER: NILSON, ANDREW
DRAWN BY:
DESIGNED BY:
CHECKED BY:
REVIEWED BY:

USCG PROJECT NO. 16192309
USCG DRAWING NO. 16192309A
USCG FILENAME 16192309d04.DWG
SHEET 04 OF 15

NEW HOME PORT
FOR USCGC EAGLE
NEW LONDON CT
STRUCTURAL
EXISTING PIER PLAN AND SECTION

SHEET ID
CITY PIER
S-101

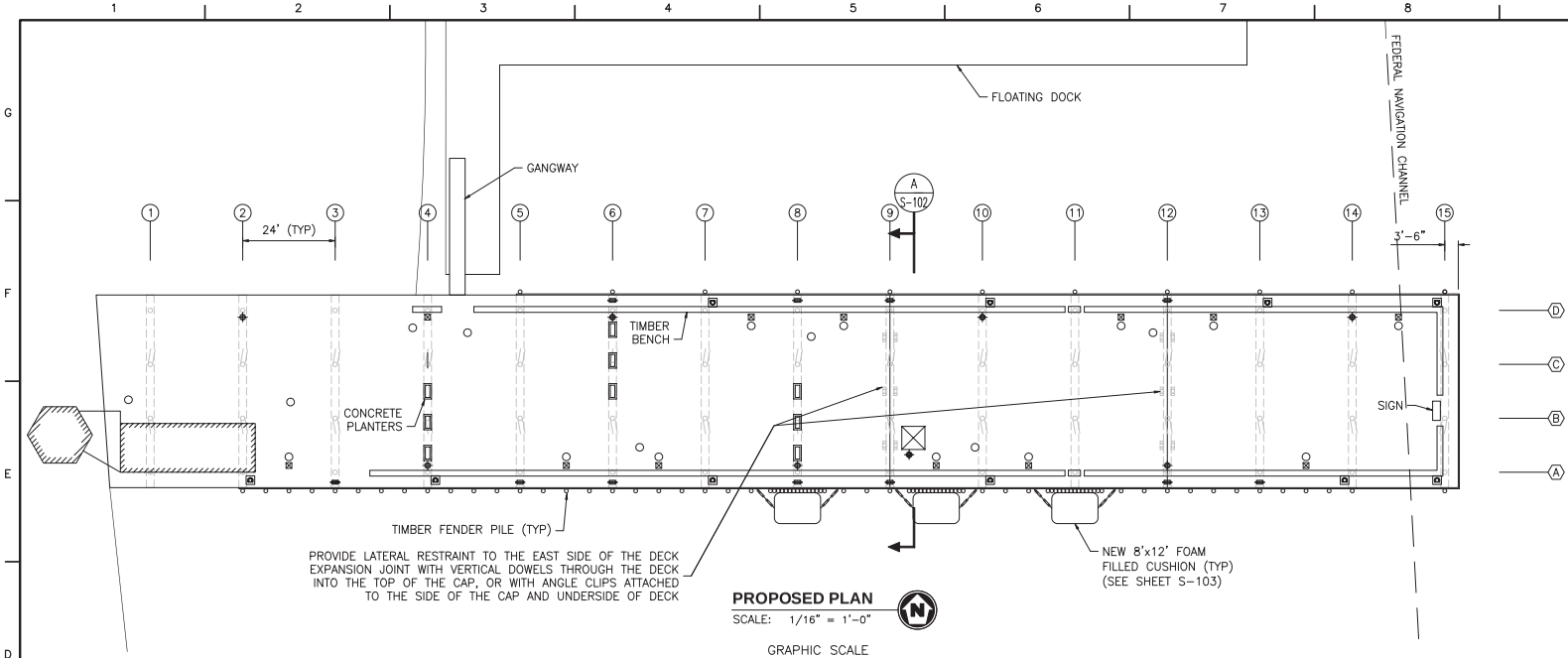

PROPOSED PLAN

SCALE: 1/16" = 1'-0"

GRAPHIC SCALE

(IN FEET)
1 inch = 16 ft.

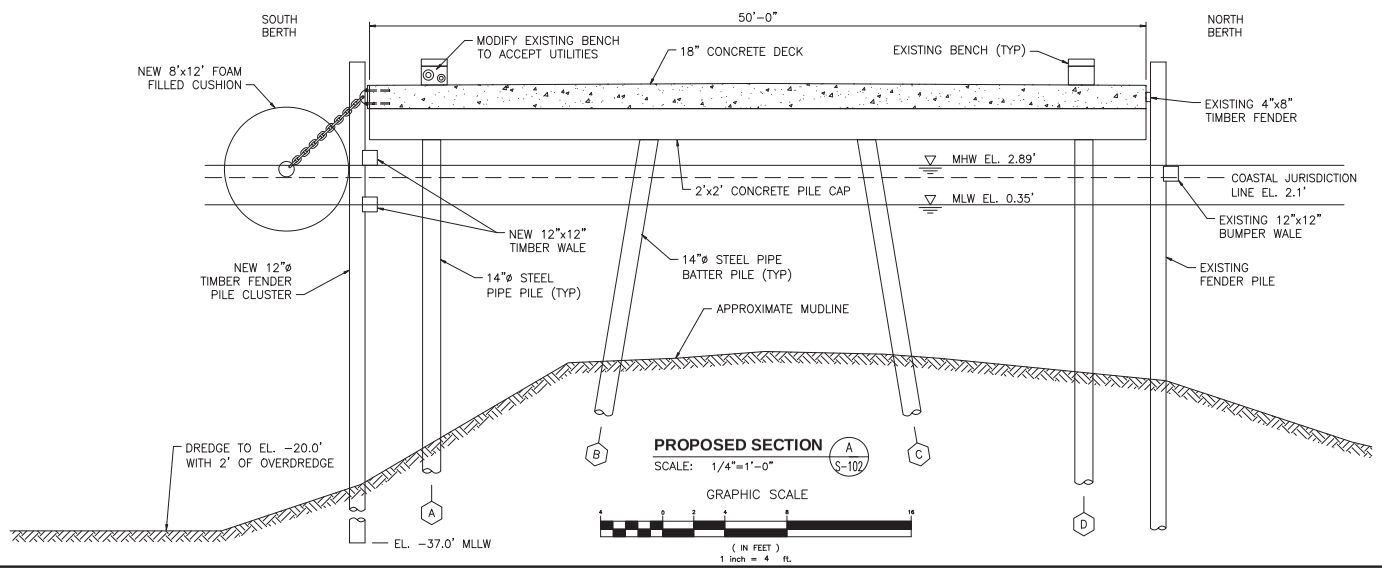

PROPOSED SECTION A S-102

SCALE: 1/4"=1'-0"

GRAPHIC SCALE

(IN FEET)
1 inch = 4 ft.

LEGEND

- PILE BENT DESIGNATION
- PILE ROW DESIGNATION
- STEEL PIPE PILE
- STEEL PIPE BATTER PILE
- EXISTING MOORING CLEAT
- LIGHT POLE
- EXISTING LIGHTED MARINE POWER BOLLARD
- EXISTINGELECTRICAL HANDHOLE
- NEW 30 TON BOLLARD SEE DETAIL 2 S-502

FOR PERMITTING ONLY
NOT FOR CONSTRUCTION

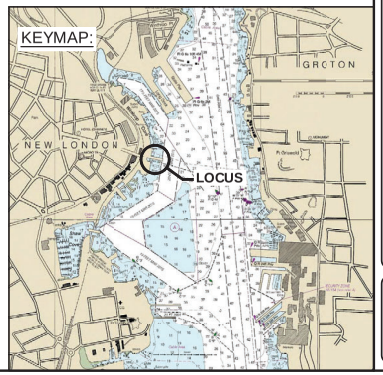

US COAST GUARD CIVIL ENGINEERING

MARK	DESCRIPTION	DATE

PLOTTING SCALE:1:1 SCALE:AS SHOWN

A/E COMPANY:
FIELDS ENGINEERING CORPORATION
BELLINGHAM, MA
(508)966-9092
A/E PROJECT NO.: 2645-16.16
CONSULTING A/E:

CIVIL ENGINEERING UNIT PROVIDENCE
475 KILVERT ST., SUITE 100
WARWICK, RI 02886

PROJECT ENGINEERS:
NILSON, ANDREW

DESIGNED BY: CMR
DRAWN BY: CMR
CHECKED BY: CMR

USCG PROJECT NO. 16192309
USCG DRAWING NO. 16192309A05
USCG FILENAME 16192309A05.DWG
SHEET 05 OF 15

CT

NEW HOME PORT
FOR USCGC EAGLE
NEW LONDON

STRUCTURAL

PROPOSED PIER PLAN AND SECTION

SHEET ID

CITY PIER

S-102

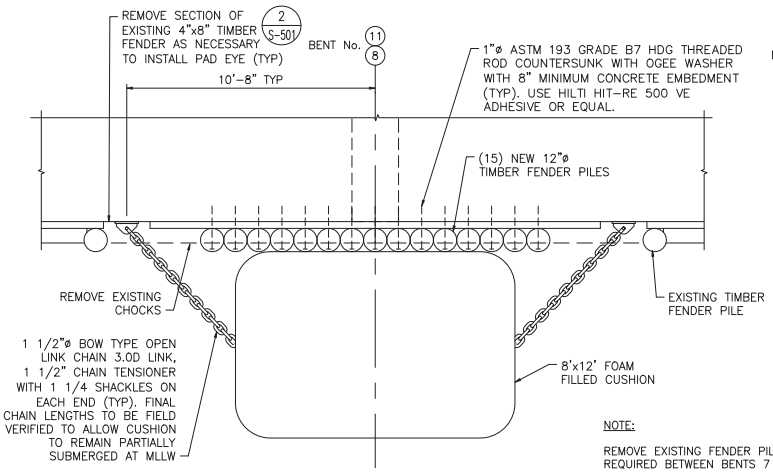

NOTE:

REMOVE EXISTING FENDER PILES AS REQUIRED BETWEEN BENTS 7 & 12

BENTS 8 AND 11 PLAN @ DECK EL. 1 S-103

SCALE: 3/8"=1'-0"

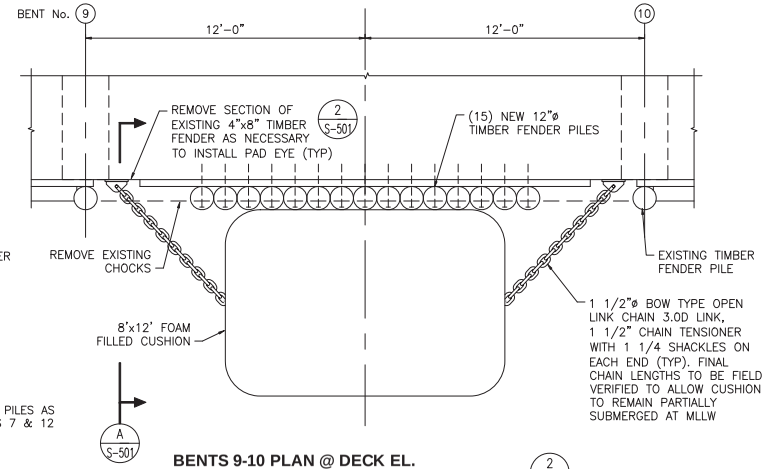

BENTS 9-10 PLAN @ DECK EL. 2 S-103

SCALE: 3/8"=1'-0"

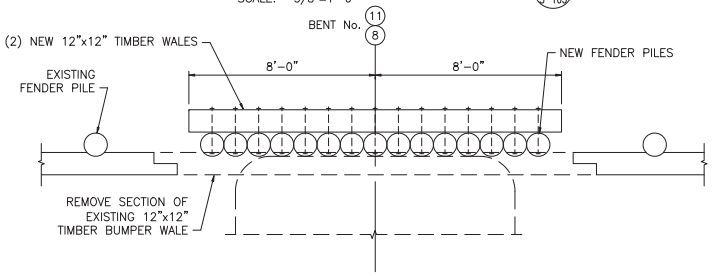

BENTS 8 AND 11 PLAN @ WALE BUMPER EL. 3 S-103

SCALE: 3/8"=1'-0"

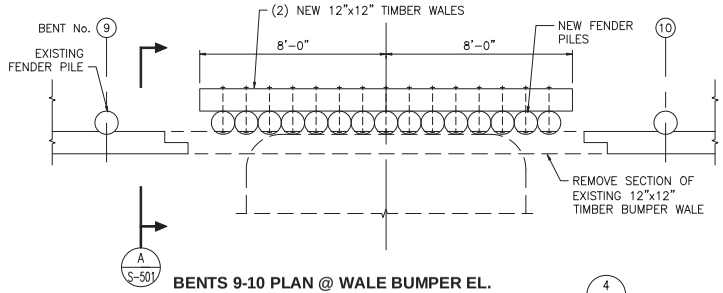

BENTS 9-10 PLAN @ WALE BUMPER EL. 4 S-103

SCALE: 3/8"=1'-0"

GRAPHIC SCALE

2 0 1 2 4 8

(IN FEET)
3/8 inch = 1 ft.

FOR PERMITTING ONLY
NOT FOR CONSTRUCTION

U.S.C.G. CIE
US COAST GUARD CIVIL ENGINEERING

MARK	DESCRIPTION	DATE

PLOTTING SCALE:1:1 | SCALE:AS SHOWN

A/E COMPANY:
CHELDS ENGINEERING CORPORATION
BELLINGHAM, MA
(508)966-9092
A/E PROJECT NO.: 2645-16.16
CONSULTING A/E:

CIVIL ENGINEERING UNIT PROVIDENCE
475 KILVERT ST., SUITE 100
WARWICK, RI 02886
PROJECT ENGINEER: NILSON, ANDREW
DESIGNED BY: CMR
DRAWN BY: CMR
EDITED BY: ARN
CHECKED BY: CMR

USCG PROJECT NO. 16192309
USCG DRAWING NO. U-S-02-30-0486
USCG FILENAME 16192309d06.DWG
SHEET 06 OF 15

NEW HOME PORT
FOR USCGC EAGLE
NEW LONDON CT
STRUCTURAL
FENDER CUSHION PLANS

SHEET ID
CITY PIER
S-103

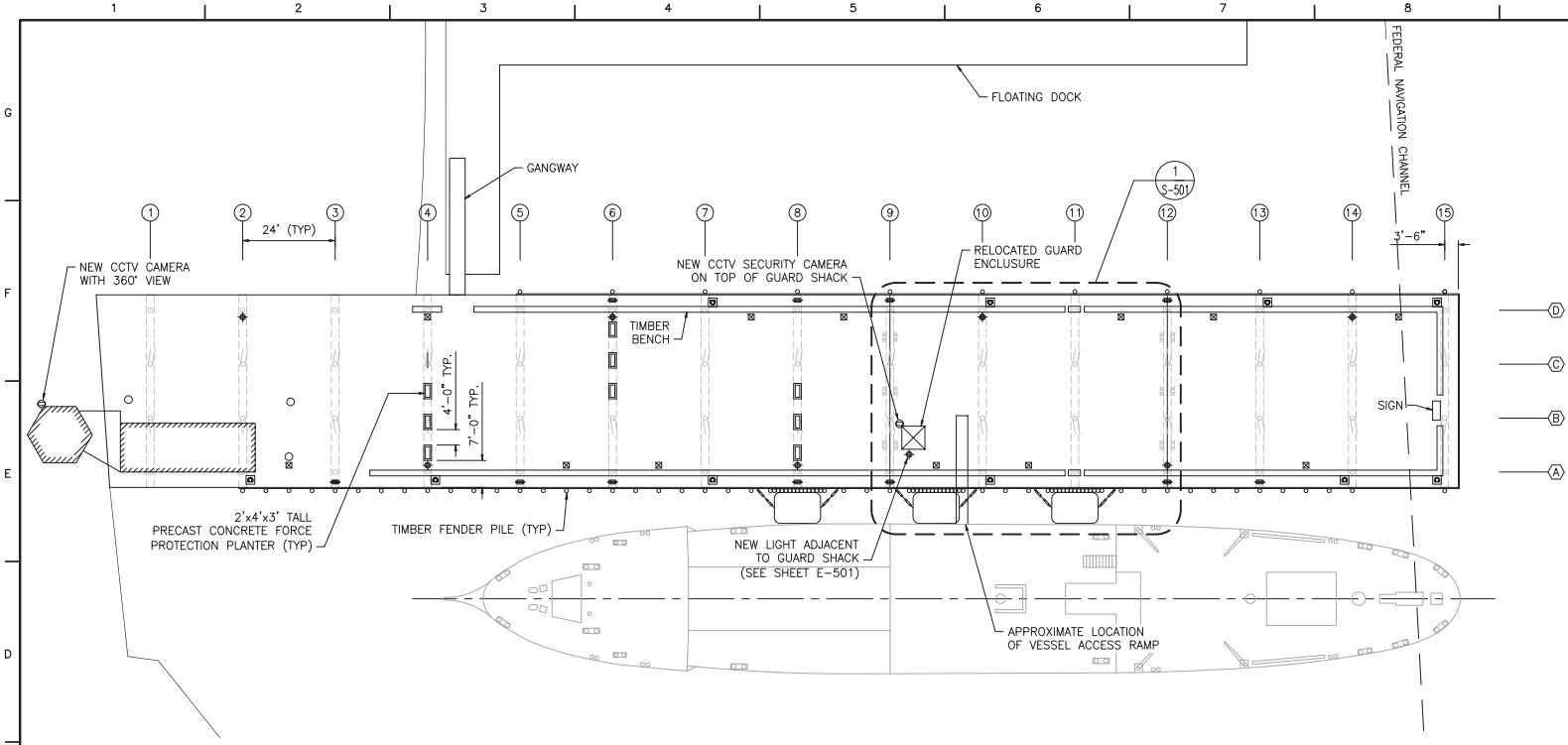

PROPOSED PLAN

SCALE: 1/16" = 1'-0"

GRAPHIC SCALE

16 0 8 16 32 64

(IN FEET)
1 inch = 16 ft.

LEGEND

- (1) PILE BENT DESIGNATION
- (A) PILE ROW DESIGNATION
- STEEL PIPE PILE
- STEEL PIPE BATTER PILE
- EXISTING MOORING CLEAT
- LIGHT POLE
- EXISTING LIGHTED MARINE POWER BOLLARD
- NEW 30 TON BOLLARD
- NEW SECURITY CAMERA

FOR PERMITTING ONLY
NOT FOR CONSTRUCTION

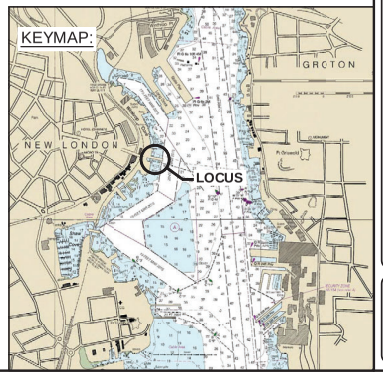

US COAST GUARD
CIVIL ENGINEERING

MARK	DESCRIPTION	DATE

SCALE: AS SHOWN
PLOTTING SCALE: 1:1

A/E COMPANY:
FIELDS ENGINEERING CORPORATION
BELLINGHAM, MA
(508)966-9082
A/E PROJECT NO.: 2645-16.16
CONSULTING A/E:

CIVIL ENGINEERING UNIT PROVIDENCE
475 KILVERT ST., SUITE 100
WARWICK, RI 02886
PROJECT ENGINEER: NILSON, ANDREW
DRAWN BY:
DESIGNED BY:
CHECKED BY:
EDITED BY:
CMR
ARN

USCG PROJECT NO. 161923D9
USCG DRAWING NO. U9192-S04-S-S-S-007
USCG FILENAME 161923D9007.DWG
SHEET 07 OF 15

NEW HOME PORT
FOR USCGC EAGLE
NEW LONDON CT
STRUCTURAL
FORCE PROTECTION PLAN

SHEET ID
CITY PIER
S-104

1234-5267-0003 for Design Build Projects
6789-9287-1200 for Design Build Projects

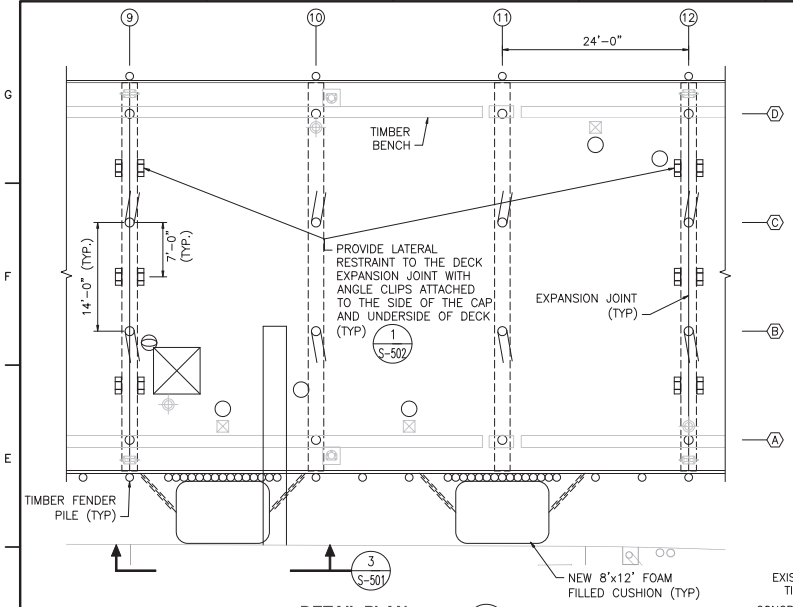

DETAIL PLAN

SCALE: 1/8" = 1'-0" (1 S-104)

GRAPHIC SCALE

(IN FEET) 1 inch = 8 ft.

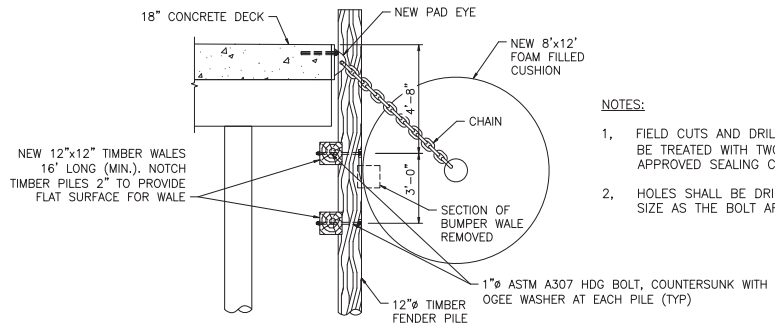

SECTION

SCALE: 3/8"=1'-0" (A S-103)

NOTES:

1. FIELD CUTS AND DRILLED HOLES SHALL BE TREATED WITH TWO (2) COATS OF APPROVED SEALING COMPOUND.
2. HOLES SHALL BE DRILLED TO THE SAME SIZE AS THE BOLT AFTER GALVANIZING.

LEGEND

- (1) PILE BENT DESIGNATION
- (A) PILE ROW DESIGNATION
- STEEL PIPE PILE
- STEEL PIPE BATTER PILE
- EXISTING MOORING CLEAT
- EXISTING LIGHT POLE
- EXISTING LIGHTED MARINE POWER BOLLARD
- EXISTING ELECTRICAL HANDHOLE
- NEW 30 TON BOLLARD

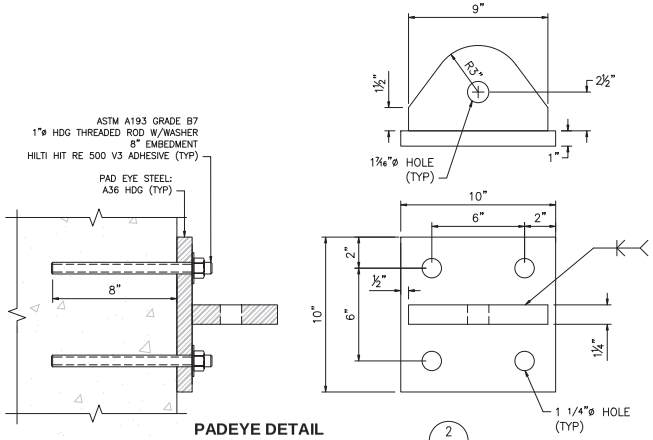

PADEYE DETAIL

SCALE: 3"=1'-0" (2 S-103)

GRAPHIC SCALE

(IN FEET) 3 inch = 1.0 ft.

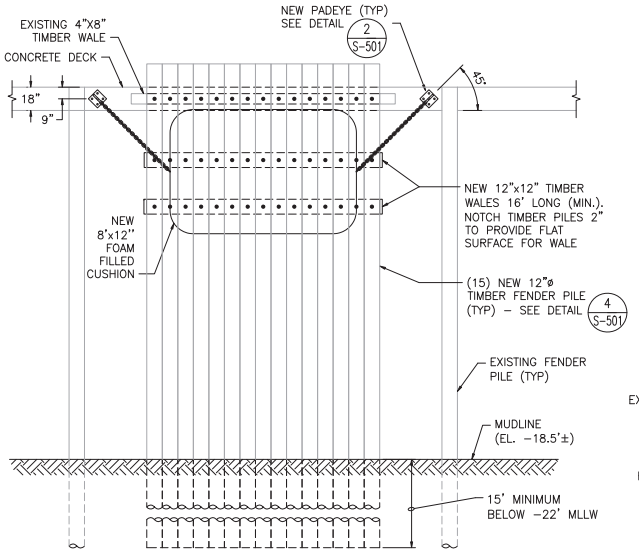

PROPOSED FENDER ELEVATION

SCALE: 1/4" = 1'-0" (3 S-501)

GRAPHIC SCALE

(IN FEET) 1 inch = 4 ft.

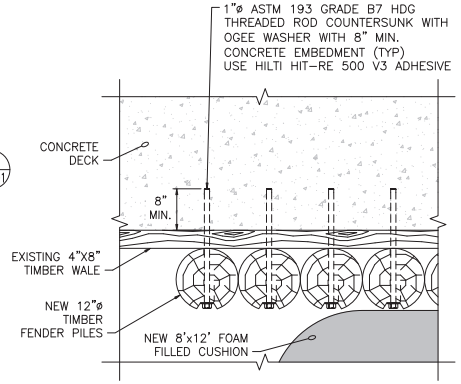

FENDER PILE CONNECTION DETAIL

SCALE: 1" = 1'-0" (4 S-501)

GRAPHIC SCALE

(IN FEET) 1 inch = 1 ft.

FOR PERMITTING ONLY
NOT FOR CONSTRUCTION

U.S.C.G. CIE — US COAST GUARD CIVIL ENGINEERING

MARK	DESCRIPTION	DATE

SCALE: AS SHOWN
PLOTTING SCALE: 1:1

A/E COMPANY:
CHELDS ENGINEERING CORPORATION
BELLINGHAM, MA
(508)966-9082
A/E PROJECT NO.: 2645-16.16
CONSULTING A/E:

CIVIL ENGINEERING UNIT PROVIDENCE
475 KILVERT ST., SUITE 100
WARWICK, RI 02886
PROJECT ENGINEER: NILSON, ANDREW
DESIGNED BY: CT
DRAWN BY:
CHECKED BY:
CMR
DATE: 2017
ARN

USCG PROJECT NO. 16192309
USCG DRAWING NO. 16192309A08
USCG FILENAME 16192309A08.DWG
SHEET 08 OF 15

NEW HOME PORT
FOR USCGC EAGLE
NEW LONDON

CT

STRUCTURAL DETAILS

SHEET ID
CITY PIER
S–501

1234–5267–0003 for Design Build Projects

6789–9287–1200 for Design Build Projects

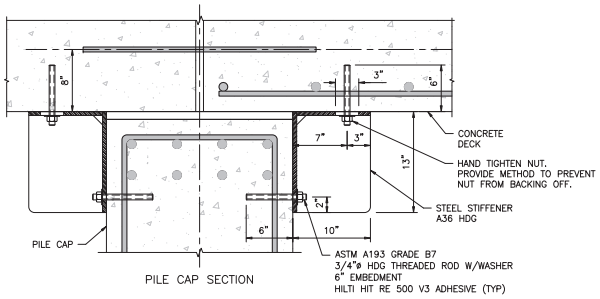

PILE CAP SECTION

NOTE:
PLACE SHEAR PLATE ASSEMBLY ON BOTH SIDES OF PILE CAP.

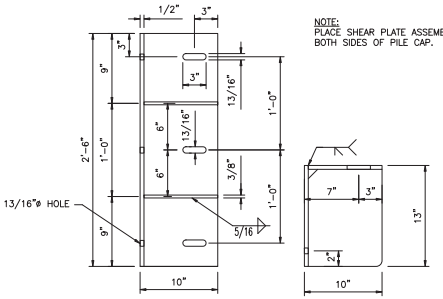

SHEAR PLATE DETAILS

SCALE: 1 1/2" = 1'-0"

1 / S-501

GRAPHIC SCALE

(IN FEET)
1 1/2 inch = 1 ft.

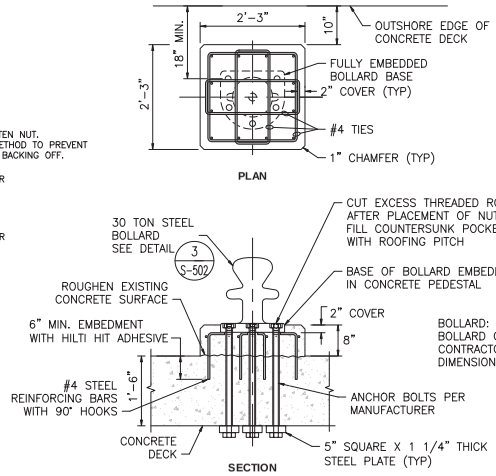

BOLLARD: TRELLEBORG 30 TON BOLLARD OR SIMILAR. CONTRACTOR TO VERIFY DIMENSIONS AND ANCHORAGE

BOLLARD PEDESTAL DETAIL

SCALE: 3/4" = 1'-0"

2 / S-102

GRAPHIC SCALE

(IN FEET)
3/4 inch = 1 ft.

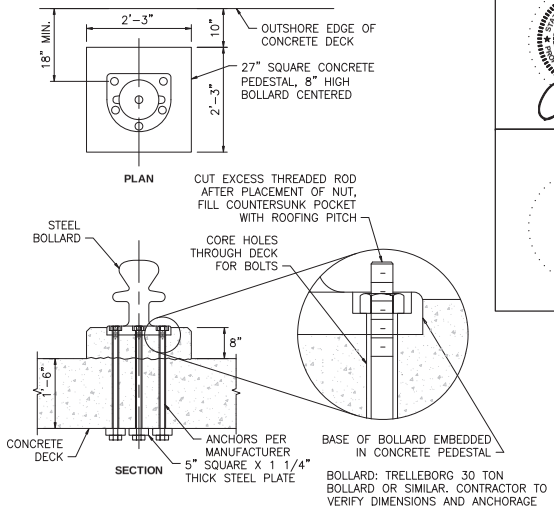

BOLLARD: TRELLEBORG 30 TON BOLLARD OR SIMILAR. CONTRACTOR TO VERIFY DIMENSIONS AND ANCHORAGE

BOLLARD INSTALLATION DETAIL

SCALE: 3/4" = 1'-0"

3 / S-502

FOR PERMITTING ONLY
NOT FOR CONSTRUCTION

U.S.C.G. CE
US COAST GUARD CIVIL ENGINEERING

MARK	DESCRIPTION	DATE

SCALE: AS SHOWN
PLOTTING SCALE: 1:1

A/E COMPANY:
FIELDS ENGINEERING CORPORATION
BELLINGHAM, MA
(508)966-9082
A/E PROJECT NO.: 2645-16.16
CONSULTING A/E:

CIVIL ENGINEERING UNIT PROVIDENCE
4175 KILLACKEY ST., SUITE 100
(401)-528-5286
PROJECT ENGINEER: NILSON, ANDREW
DRAWN BY: CTC
DESIGNED BY: CTC
CHECKED BY: CMR
EDITED BY: ARN

USCG PROJECT NO. 16192309
USCG DRAWING NO. 16192309
USCG FILENAME 16192309d09.DWG
SHEET 09 OF 15

NEW HOME PORT
FOR USCGC EAGLE
NEW LONDON CT
STRUCTURAL DETAILS

SHEET ID
CITY PIER
S-502

APPENDIX D
Past Permits

STATE OF CONNECTICUT
DEPARTMENT OF ENVIRONMENTAL PROTECTION

CELEBRAT CONNECTICU 350 YEAR 1985&198

CERTIFIED MAIL
RETURN RECEIPT REQUESTED

March 7, 1986

City of New London
Office of the City Manager
Municipal Building
81 Captains Walk
New London, CT 06320

Gentlemen:

SUBJECT: APPLICATION NO. SD-H-85-347
TOWN OF NEW LONDON

The Commissioner of Environmental Protection has approved your application to conduct certain regulated activities. Your attention is directed to the conditions of the enclosed permit. You should read your permit carefully. Construction or work must conform to that which is authorized.

If you have not already done so, you should contact your local Planning and Zoning Office and the U.S. Army Corps of Engineers to determine local and federal permit requirements on your project, if any. Write the Corps' New England Division, Regulatory Branch, 424 Trapelo Road, Waltham, Massachusetts 02254; or, call (617) 647-8332.

If you have any questions concerning your permit, please contact the Coastal Section of the Water Resources Unit at 566-7160.

Sincerely,

Denis Cunningham
Assistant Director
Water Resources Unit

Sent Certified Mail
Return Receipt Requested to: Adjacent Property Owners; All Parties

Copies Furnished to:

Mayor or First Selectman
Planning & Zoning Commission
Conservation Commission
Shellfish Commission
U.S. Army Corps of Engineers
Council on Environmental Quality
Dept. of Agriculture/Aquaculture Div.
DEP - Water Compliance Unit
DEP - Wildlife Management Unit
DEP - Planning/Coastal Area Management
DOT - Commissioner
DOT - Bureau of Waterways
U.S. Fish and Wildlife Service
Nat'l. Marine Fisheries - Habitat Protecti

Phone:
165 Capitol Avenue • Hartford, Connecticut 06106

STATE OF CONNECTICUT
DEPARTMENT OF ENVIRONMENTAL PROTECTION

CELEBRATE CONNECTICUT 350 YEARS 1985 & 1986

City of New London
Office of the City Manager
Municipal Building
181 Captains Walk
New London, CT 06320

Permit No.: SD-85-347
Town: New London

Gentlemen:

This authorization refers to your application to conduct regulated activities in the tidal, coastal and navigable waters of New London Harbor and Long Island Sound.

The Commissioner of Environmental Protection has considered your application with due regard for the matters enumerated in Sections 22a-359 and 22a-92 of the General Statutes, as amended, and has found that the proposed work as specified and conditioned below is in conformance with the purposes and provisions of said sections and the applicable provisions of Connecticut's Water Quality Standards relating to construction.

The authorized activity consists of dredging an irregular area to a depth of 20'± below Mean Low Water, south of the City Pier at the foot of State Street in accordance with plans dated 8-16-85 and 11-5-85. The 3240± cubic yards of dredged material will be disposed of at the New London Dump Site in Long Island Sound.

This permit is issued subject to the following conditions:

1. The permittee shall notify the Commissioner of Environmental Protection immediately upon the commencement of work and upon its completion.

2. If said authorized activity is not completed on or before March 7, 1989, said activity shall cease and, if not previously revoked or specifically extended, this permit shall be null and void.

3. All work and all regulated activities conducted pursuant to this authorization shall be consistent with the terms and conditions of this permit. Any structures, excavation, fill, obstructions, encroachments or regulated activities not specifically identified and authorized herein shall constitute a violation of this permit and may result in its modification, suspension, or revocation. Upon initiation of the activities authorized herein, the permittee thereby accepts and agrees to comply with the terms and conditions of this permit.

4. This authorization is not transferable without the written consent of the Commissioner of Environmental Protection.

5. In evaluating this application, the Department has relied on information provided by the applicant and, if such information subsequently proves to be false, deceptive, incomplete and/or inaccurate, this permit may be modified, suspended or revoked.

6. The permittee shall employ best management practices, consistent with the terms and conditions of this permit, to control storm water discharges and to prevent erosion and sedimentation and to otherwise prevent pollution of wetlands or watercourses. For information and technical assistance, contact the Department of Environmental Protection's Water Resources Unit. The permittee shall immediately inform the Department of any problems involving wetlands or watercourses which have developed in the course of, or which are caused by, the authorized work.

7. No equipment or material including without limitation, fill, construction materials, or debris, shall be deposited, placed, or stored in any wetland or watercourse on or off site unless specifically authorized by this permit.

8. This permit is subject to and does not derogate any present or future property rights or other rights or powers of the State of Connecticut, and conveys no property rights in real estate or material nor any exclusive privileges, and is further subject to any and all public and private rights and to any federal, state or local laws or regulations pertinent to the property or activity affected hereby.

9. No dredging shall be conducted during the ecologically sensitive period of June 1st through September 30th in any permit year.

10. Sidecasting or inwater rehandling of dredged material is not authorized.

11. Dragging the bottom outside of the dredge area authorized herein, with the spoil barge or scow, beam, or otherwise, is not authorized.

12. Spoil scows or barges shall be loaded and transported in a manner which prevents spillage and washout of dredged materials.

13. A New England Division Corps of Engineers inspector shall be employed to verify disposal at the approved disposal site.

14. Dredged materials shall be point dumped at the government-maintained disposal buoy within the authorized disposal area.

15. Spoil scows or barges shall travel to and from the New London Dump Site utilizing sea lanes delineated by the United States Army Corps of Engineers.

16. A copy of this permit should be given to the dredge contractor employed to execute the work authorized herein. Failure to conform to the terms and conditions of this permit may subject the contractor, as well as the permittee, to penalties as provided by law.

In accordance with the provisions of Section 22a-98 of the Coastal Management Act, the Commissioner of Environmental Protection hereby certifies that the activities permitted herein are consistent with the policies of Section 22a-92 of the General Statutes. This authorization constitutes the permit required by Section(s) 22a-361 of the Connecticut General Statutes and certification as required by Section 401 of the Federal Water Pollution Control Act, as amended.

Dated: March 7, 1986

Stanley J. Pac

Stanley J. Pac
Commissioner

MAP A

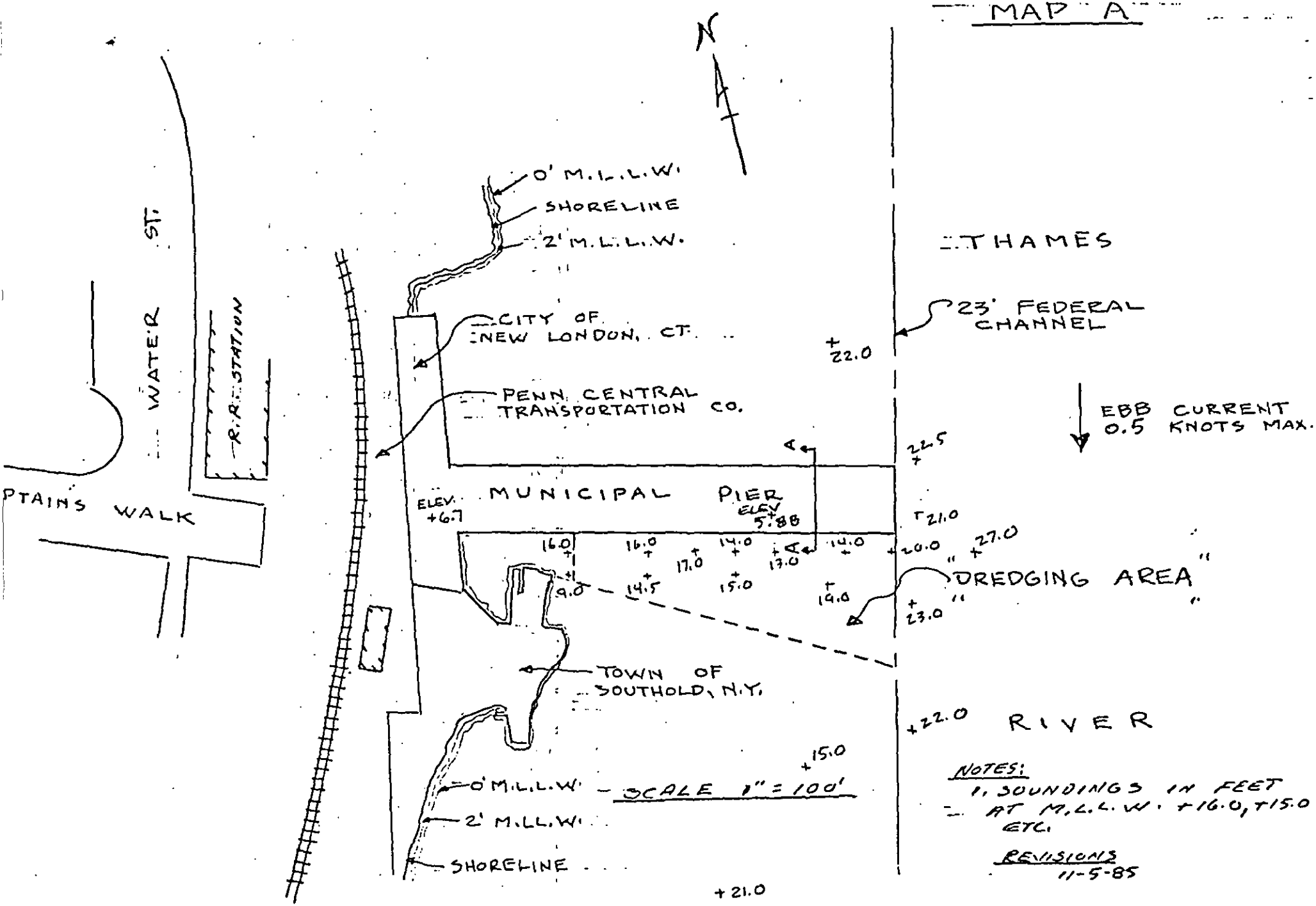

NOTES:
1. SOUNDINGS IN FEET AT M.L.L.W. +16.0, +15.0 ETC.

REVISIONS
11-5-85

MAP OF MUNICIPAL PIER AND VICINITY, NEW LONDON, CONN.
8-16-85
J.S.
DRAWING No. CP-1

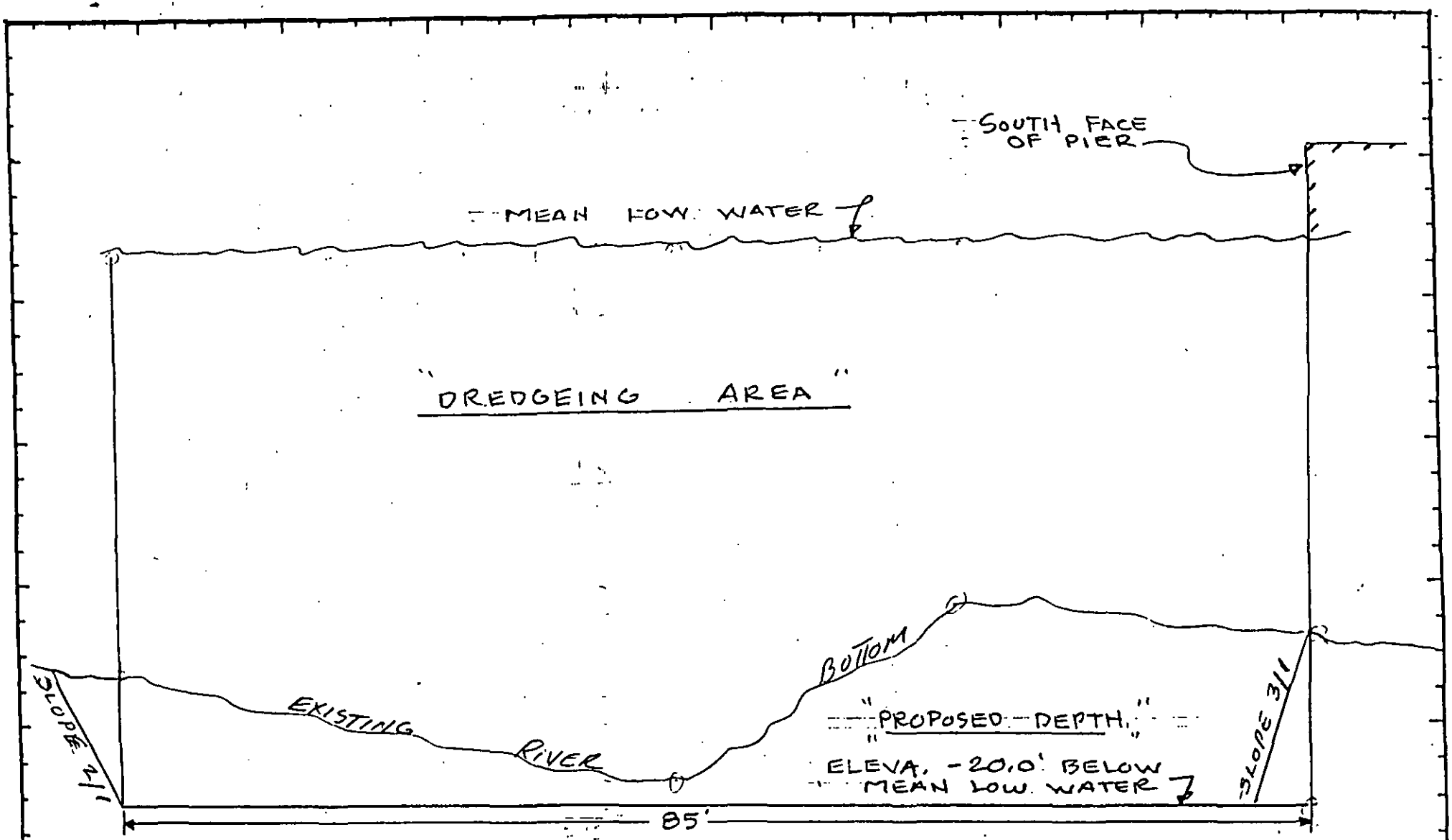

SECTION A-A

SCALES HORIZONTAL 1" = 10'
VERTICAL 1" = 5'

PROPOSED DREDGEING OF THE MUNICIPAL PIER, NEW LONDON, CONNECTICUT.

SCALE- AS NOTED	J.S.	DATE- 11-5-85

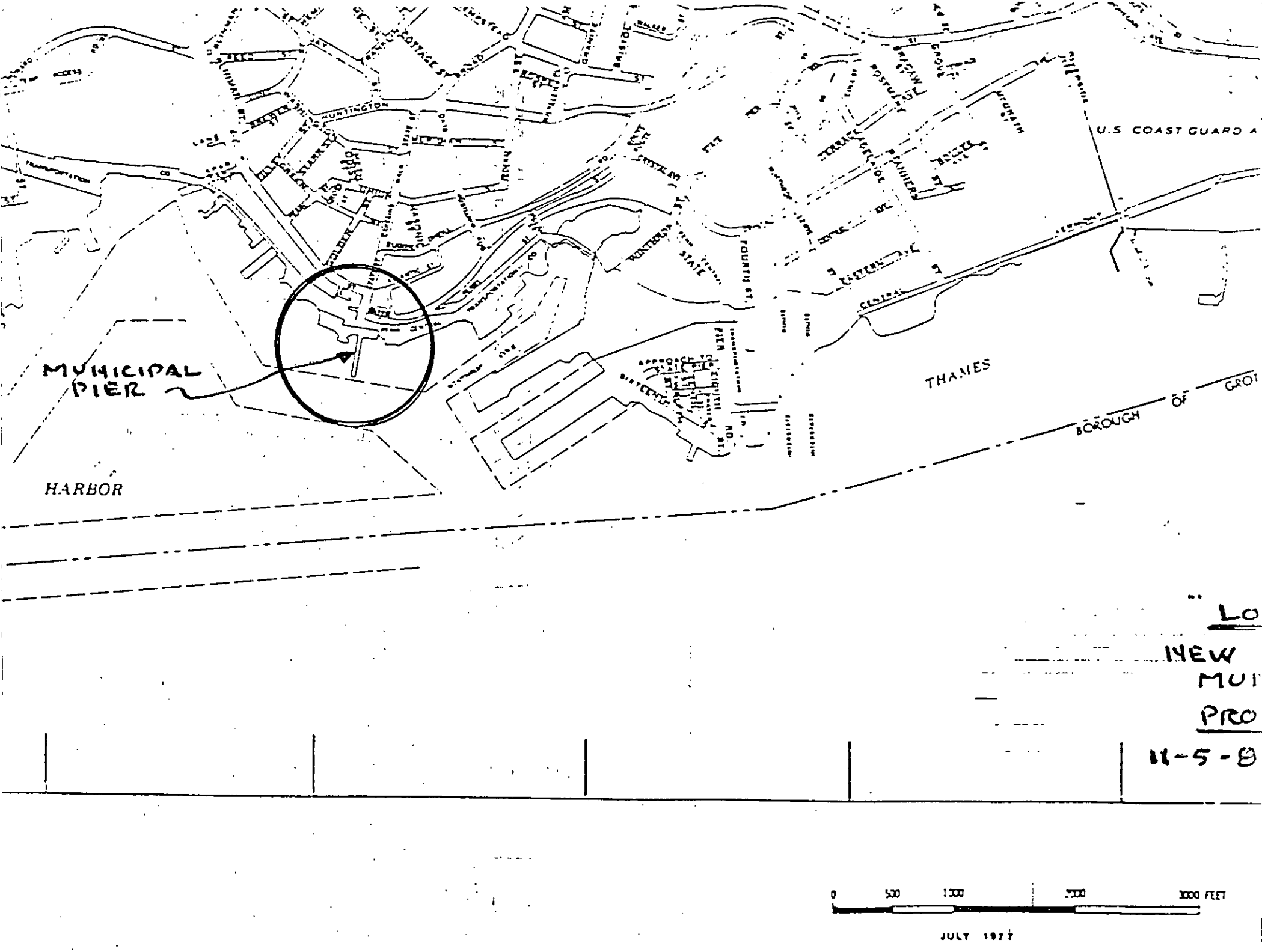
MUNICIPAL PIER
HARBOR
THAMES
U.S COAST GUARD A
BOROUGH OF
STATE
FOURTH ST.
PIER
COTTAGE
HUNTINGTON
BRISTOL
GROVE
POSTUMS
BRIGAM
PRAINIERS
BOCKER
MERIDIAN
CENTRAL
LO
NEW
MU
PRO
11-5-8
0
500
1000
2000
3000 FEET
JULY 1977

APPENDIX E
City Pier As-Builts

CITY PIER REHABILITATION

LEGEND

EXISTING		PROPOSED
	STREET LINE	
	PROPERTY LINE	
	WETLAND BUFFER LINE	
	SETBACK LINE	
70	MAJOR CONTOUR	70
68	MINOR CONTOUR	68
	SPOT GRADE	+70.5
	WETLANDS	
	TREE LINE	
	TREE/SHRUB	
	STONEWALL	
	SITE LIGHT	
	HYDRANT	
	WATER METER	
WV	WATER VALVE	WV
GV	GAS VALVE	GV
	CATCH BASIN	
	MANHOLE/YARD DRAIN/AREA DRN.	
	SANITARY SEWER W/MANHOLE	
	STORM DRAIN W/CATCH BASIN	
W	WATER MAIN	W
DW	DOMESTIC WATER	DW
FP	FIRE PROTECTION WATER	FP
G	GAS MAIN	G
E	ELECTRIC LINE	E
ETC	ELECTRIC, TELEPHONE, CABLE	ETC
	UTILITY POLE	
	TRAFFIC SIGN	
	IRON PIPE	
	MONUMENT	
	EDGE OF PAVEMENT W/CURB	
	RETAINING WALL	
	SIDEWALK	
	CONTRACT LIMIT LINE	
	BOLLARD	(H.C. or Steel as spec.)
	GUARD RAIL	
	PICKET FENCE	
	CHAIN LINK FENCE	
X	BARBWIRE FENCE	X
	SEDIMENTATION CONTROL SYSTEM	

GENERAL NOTES

1. THIS SURVEY HAS BEEN PREPARED PURSUANT TO THE REGULATIONS OF CONNECTICUT STATE AGENCIES SECTIONS 20–300b–1 THROUGH 20–300b–20 AND THE "STANDARDS FOR SURVEYS AND MAPS IN THE STATE OF CONNECTICUT" AS ADOPTED BY THE CONNECTICUT ASSOCIATION OF LAND SURVEYORS, INC. ON SEPTEMBER 26, 1996. IT IS A TOPOGRAPHIC SURVEY CONFORMING TO TOPOGRAPHIC ACCURACY CLASS T–2, AND IS INTENDED TO DEPICT THE EXISTING CONDITIONS OF THE SITE.
2. NORTH ARROW IS BASED UPON THE CONNECTICUT STATE PLANE COORDINATE SYSTEM (NAD 1983).
3. ELEVATIONS, CONTOURS, AND BENCHMARK ARE BASED UPON NGVD 1929.
4. AT NO TIME SHALL THE CONTRACTOR'S OPERATIONS AND/OR MATERIALS STORAGE ENCROACH UPON THE RAIL RIGHT–OF–WAY. CONTRACTOR IS RESPONSIBLE FOR ANY COORDINATION W/ RAILROAD IF NECESSARY.
5. ALL SITE ACCESS CONTROLS AND CONSTRUCTION SIGNAGE TO BE INSTALLED TO THE SATISFACTION OF THE ENGINEER PRIOR TO CONSTRUCTION.
6. ALL CONTROLS FOR THE PROTECTION OF THE ENVIRONMENT SHALL BE IN PLACE TO THE SATISFACTION OF THE ENGINEER PRIOR TO THE START OF CONSTRUCTION.
7. CONTRACTOR TO OBTAIN ALL NECESSARY PERMITS PRIOR TO BEGINNING WORK. REFER TO NOTICE TO CONTRACTOR – WORK PERMITS.
8. ANY DISCREPANCIES IN THE PLANS AND SPECIFICATIONS OR EXISTING CONDITIONS SHALL BE BROUGHT TO THE ATTENTION OF THE ENGINEER.
9. INFORMATION REGARDING THE LOCATION OF EXISTING UTILITIES HAS BEEN BASED UPON AVAILABLE INFORMATION AND MAY BE INCOMPLETE, AND WHERE SHOWN SHOULD BE CONSIDERED APPROXIMATE. THE LOCATION OF ALL EXISTING UTILITIES SHOULD BE CONFIRMED PRIOR TO BEGINNING CONSTRUCTION. CALL "CALL BEFORE YOU DIG", 1–800–922–4455. ALL UTILITY LOCATIONS THAT DO NOT MATCH THE VERTICAL OR HORIZONTAL CONTROL SHOWN ON THE PLANS SHALL IMMEDIATELY BE BROUGHT TO THE ATTENTION OF THE ENGINEER FOR RESOLUTION.
10. CONTRACTOR SHALL OBTAIN ALL PERMITS REQUIRED FOR CONSTRUCTION (I.E. BUILDING, DEMOLITION, ELECTRICAL, PLUMBING).

STATE OF CONNECTICUT
KISHOR PATEL
23980
LICENSED
PROFESSIONAL ENGINEER

KISHOR PATEL, P.E. STRUCTURAL ENGINEER/ASSOCIATE
CONN. PROFESSIONAL REG. NO. 23980
DATE: 10/18/10

STATE STREET & WATER STREET
NEW LONDON
CONNECTICUT
CONSTRUCTION DOCUMENTS

OCTOBER 18, 2010

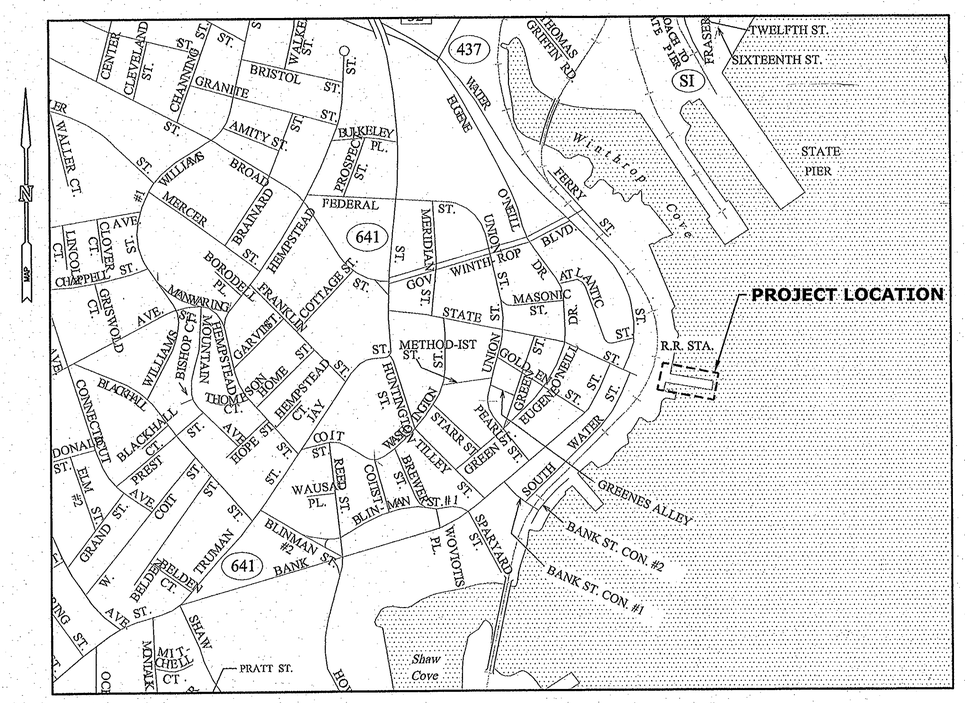

PROJECT SITE VICINITY MAP:

0 250' 500'
SCALE: 1"=500'

City of New London
Connecticut

- **OWNER**

DEPARTMENT OF PUBLIC WORKS
CITY OF NEW LONDON
111 UNION STREET
NEW LONDON, CT 06320

ENGINEER OF RECORD

MILONE & MACBROOM®
Engineering, Landscape Architecture and Environmental Science

99 Realty Drive
Cheshire, Connecticut 06410
(203) 271-1773 Fax (203) 272-9733
www.miloneandmacbroom.com

IN ASSOCIATION WITH

SILVER / PETRUCELLI + ASSOCIATES
Architects and Engineers
3190 Whitney Avenue, Hamden, CT 06518-2340
Tel. 203 230 9007 Fax. 203 230 8247
www.silverpetrucelli.com

CLARENCE WELTI, P.E., P.C.
GEOTECHNICAL ENGINEERING
227 Williams Street - P.O. BOX 397
Glastonbury, CT 06033
(860) 633-4623 / Fax (860) 657-2514

AS BUILT

LIST OF DRAWINGS:

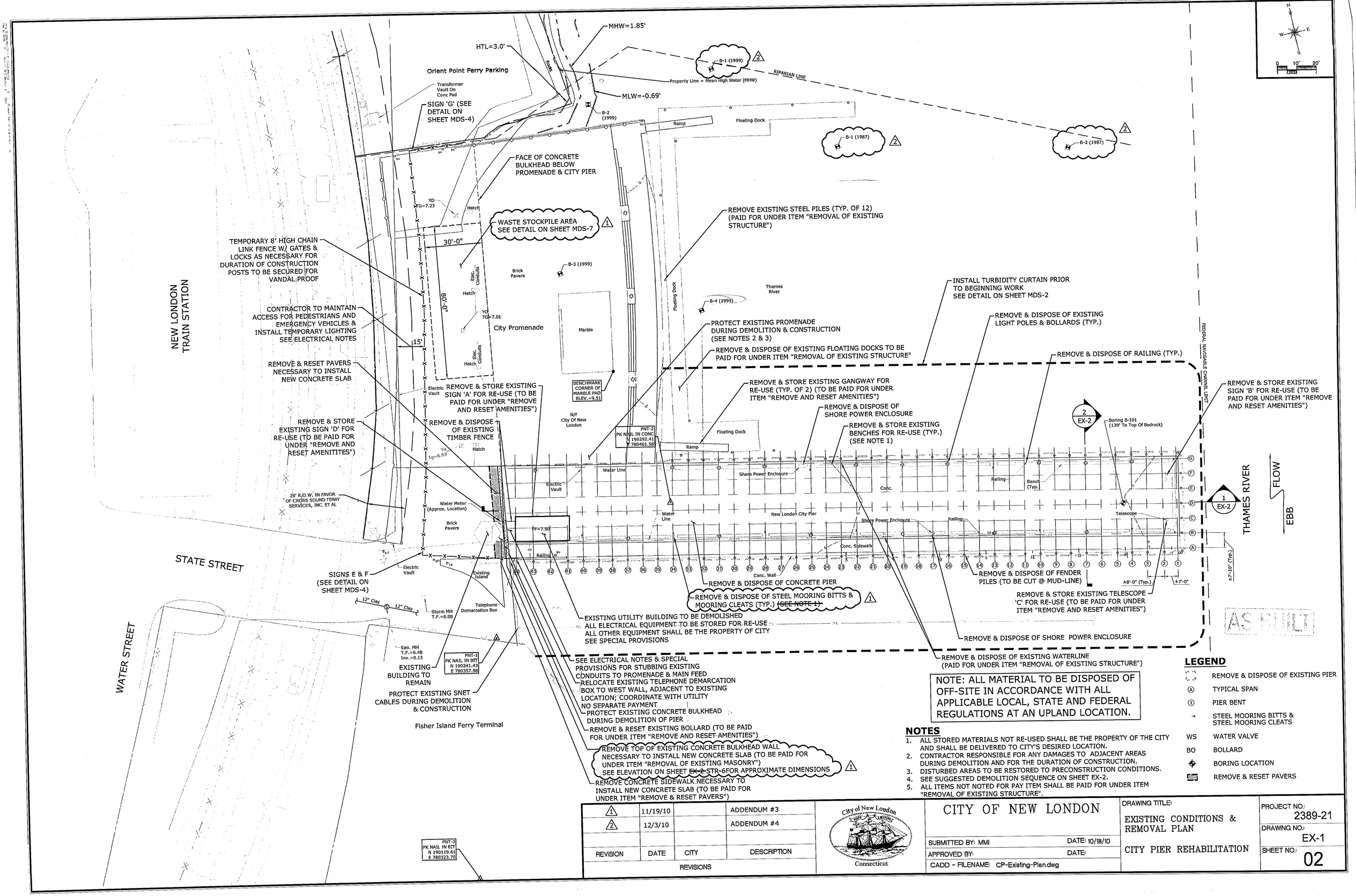

NOTE: ALL MATERIAL TO BE DISPOSED OF OFF-SITE IN ACCORDANCE WITH ALL APPLICABLE LOCAL, STATE AND FEDERAL REGULATIONS AT AN UPLAND LOCATION.

NOTES

1. ALL STORED MATERIALS NOT RE-USED SHALL BE THE PROPERTY OF THE CITY AND SHALL BE DELIVERED TO CITY'S DESIRED LOCATION.
2. CONTRACTOR RESPONSIBLE FOR ANY DAMAGES TO ADJACENT AREAS DURING DEMOLITION AND FOR THE DURATION OF CONSTRUCTION.
3. DISTURBED AREAS TO BE RESTORED TO PRECONSTRUCTION CONDITIONS.
4. SEE SUGGESTED DEMOLITION SEQUENCE ON SHEET EX-2.
5. ALL ITEMS NOT NOTED FOR PAY ITEM SHALL BE PAID FOR UNDER ITEM "REMOVAL OF EXISTING STRUCTURE".

LEGEND

	REMOVE & DISPOSE OF EXISTING PIER
Ⓐ	TYPICAL SPAN
①	PIER BENT
	STEEL MOORING BITTS & STEEL MOORING CLEATS
WS	WATER VALVE
BO	BOLLARD
	BORING LOCATION
	REMOVE & RESET PAVERS

REVISION	DATE	CITY	DESCRIPTION
1	11/19/10		ADDENDUM #3
2	12/3/10		ADDENDUM #4

REVISIONS

City of New London Connecticut

CITY OF NEW LONDON

SUBMITTED BY: MMI DATE: 10/18/10

APPROVED BY: DATE:

CADD - FILENAME: CP-Existing-Plan.dwg

DRAWING TITLE: EXISTING CONDITIONS & REMOVAL PLAN

CITY PIER REHABILITATION

PROJECT NO: 2389-21

DRAWING NO: EX-1

SHEET NO: 02

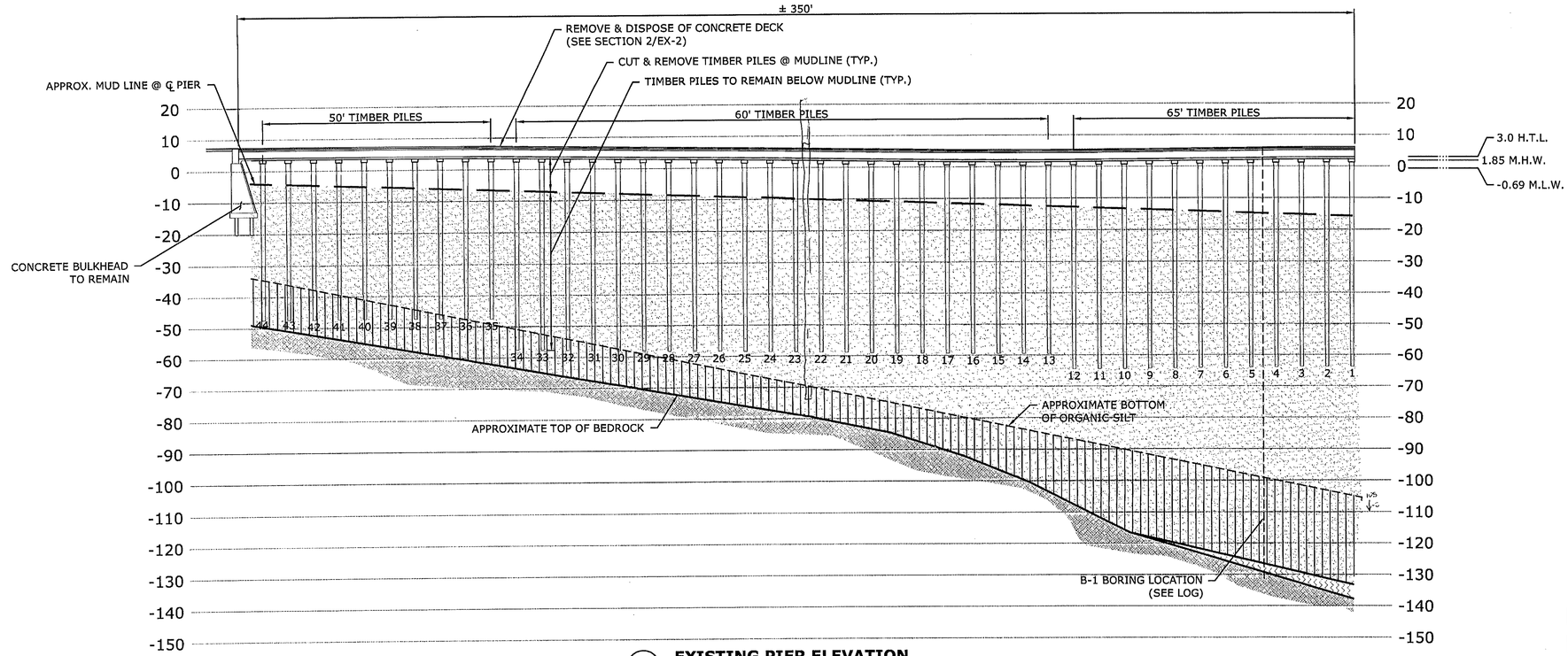

1 / EX-2 **EXISTING PIER ELEVATION**

SCALE: 1" = 20'-0"

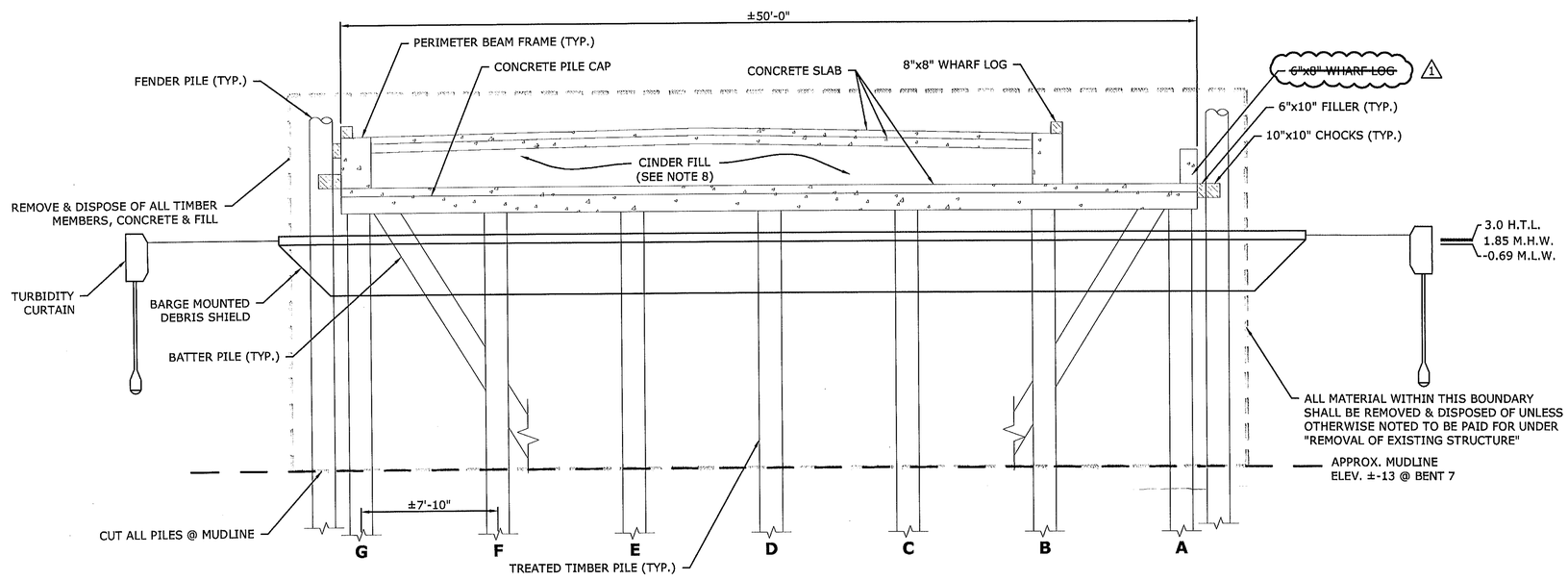

2 / EX-2 **EXISTING PIER CROSS SECTION**

SCALE: ¼" = 1'-0"

LEGEND

1	PIER BENT
	ORGANIC SILT
	COMPACT (LOCALLY MEDIUM COMPACT) FINE TO COARSE SAND, LITTLE TO SOME GRAVEL, TRACE SILT
	COMPACT FINE TO COARSE SAND, LITTLE GRAVEL, LITTLE SILT
	HARD GRANITIC GNEISS

DEMOLITION SEQUENCE

1. INSTALL TURBIDITY CURTAIN.
2. INSTALL PERIMETER SAFETY FENCE (AS SHOWN ON SHEET EX-1).
3. REQUEST CITY TO DISCONNECT WATER @ ROCKET SHIP BUILDING.
4. REQUEST CL&P TO DISCONNECT ELECTRICAL SERVICES.
5. REMOVE AND STORE ALL ITEMS TO BE REUSED ON NEW PIER OR RETURNED TO CITY.
6. REMOVE EXISTING UTILITY BUILDING.
7. REMOVE TOP CONCRETE SLAB AND DISPOSE OF OFF SITE.
8. REMOVE CINDER FILL. MATERIAL SHALL BE HANDLED AND DISPOSED AS CONTROLLED MATERIAL. SEE TECHNICAL SPECIFICATION.
9. REMOVE SIDE WALLS AND INTERNAL WALLS AND DISPOSE OF OFF SITE.
10. INSTALL BARGE MOUNTED DEBRIS SHIELD.
11. REMOVE BOTTOM CONCRETE SLAB AND DISPOSE OF OFF SITE.
12. REMOVE CONCRETE PILE CAPS AND DISPOSE OF OFF SITE.
13. CUT EXISTING TIMBER PILES AND FENDER PILES AT MUD LINE AND DISPOSE OF OFF SITE.

NOTE

CONTRACTOR MAY PROPOSE ALTERNATE SEQUENCE TO BE APPROVED BY ENGINEER PRIOR TO DEMOLITION.

AS BUILT

REVISION	DATE	CITY	DESCRIPTION
1	11/19/10		ADDENDUM #3

REVISIONS

City of New London Connecticut

CITY OF NEW LONDON

SUBMITTED BY: MMI DATE: 10/18/10

APPROVED BY: DATE:

CADD - FILENAME: CP-Existing-Elevation+Section.dwg

DRAWING TITLE:

EXISTING ELEVATION, SECTION & NOTES

CITY PIER REHABILITATION

PROJECT NO.: 2389-21

DRAWING NO.: EX-2

SHEET NO.: 03

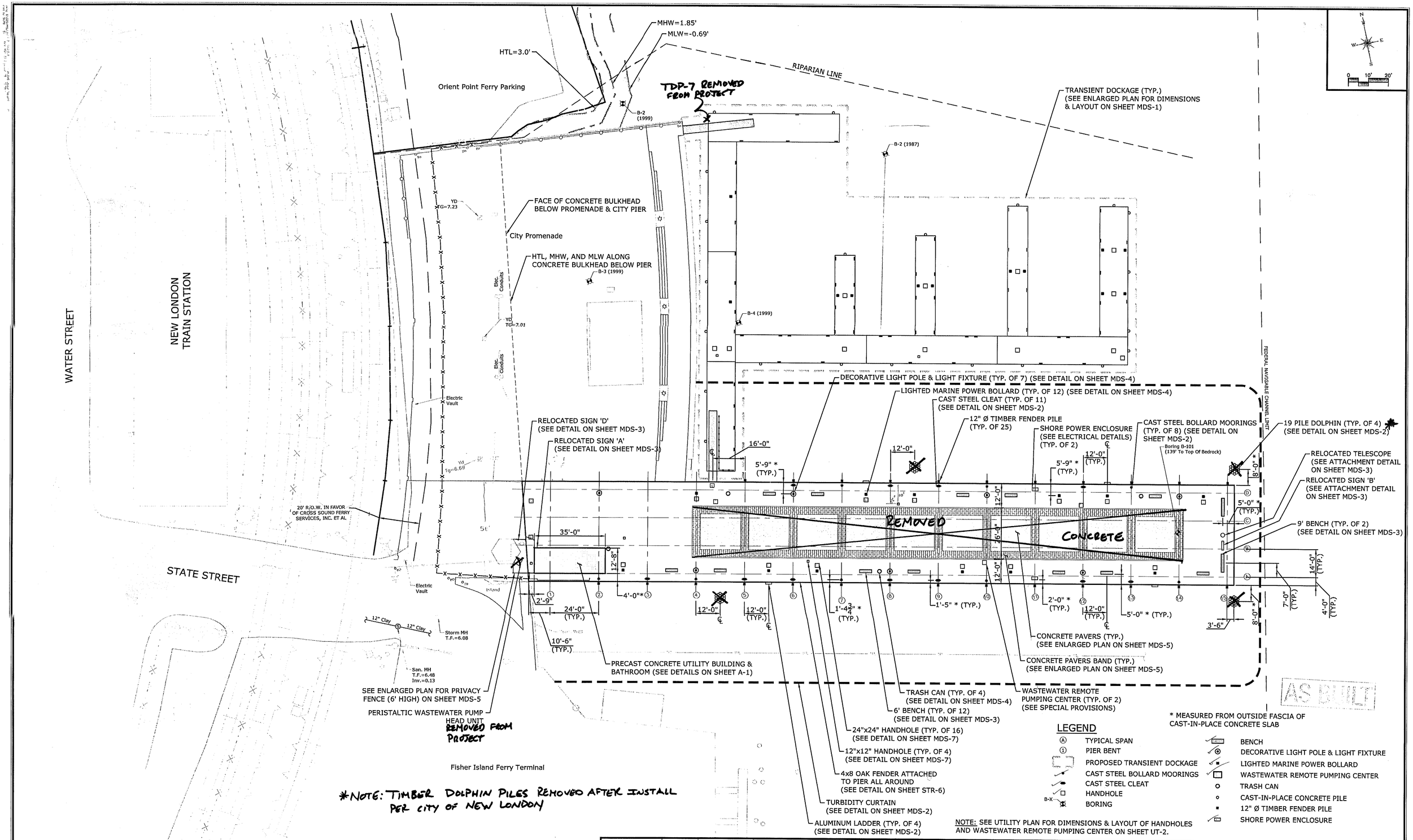
MHW=1.85'
MLW=-0.69'
HTL=3.0'
RIPARIAN LINE
Orient Point Ferry Parking
TDP-7 REMOVED FROM PROJECT
B-2 (1999)
B-2 (1987)
B-4 (1999)
B-3 (1999)
TRANSIENT DOCKAGE (TYP.) (SEE ENLARGED PLAN FOR DIMENSIONS & LAYOUT ON SHEET MDS-1)
FACE OF CONCRETE BULKHEAD BELOW PROMENADE & CITY PIER
City Promenade
HTL, MHW, AND MLW ALONG CONCRETE BULKHEAD BELOW PIER
WATER STREET
NEW LONDON TRAIN STATION
STATE STREET
Elec. Conduits
Electric Vault
YD TG=7.23
YD TG=7.01
YD TG=6.69
DECORATIVE LIGHT POLE & LIGHT FIXTURE (TYP. OF 7) (SEE DETAIL ON SHEET MDS-4)
LIGHTED MARINE POWER BOLLARD (TYP. OF 12) (SEE DETAIL ON SHEET MDS-4)
CAST STEEL CLEAT (TYP. OF 11) (SEE DETAIL ON SHEET MDS-2)
12" Ø TIMBER FENDER PILE (TYP. OF 25)
SHORE POWER ENCLOSURE (SEE ELECTRICAL DETAILS) (TYP. OF 2)
CAST STEEL BOLLARD MOORINGS (TYP. OF 8) (SEE DETAIL ON SHEET MDS-2)
Boring B-101 (139' To Top Of Bedrock)
19 PILE DOLPHIN (TYP. OF 4) (SEE DETAIL ON SHEET MDS-2)
RELOCATED TELESCOPE (SEE ATTACHMENT DETAIL ON SHEET MDS-3)
RELOCATED SIGN 'B' (SEE ATTACHMENT DETAIL ON SHEET MDS-3)
9' BENCH (TYP. OF 2) (SEE DETAIL ON SHEET MDS-3)
RELOCATED SIGN 'D' (SEE DETAIL ON SHEET MDS-3)
RELOCATED SIGN 'A' (SEE DETAIL ON SHEET MDS-3)
20' R/O.W. IN FAVOR OF CROSS SOUND FERRY SERVICES, INC. ET AL
FEDERAL NAVIGABLE CHANNEL LIMIT
REMOVED CONCRETE
16'-0"
5'-9" * (TYP.)
12'-0"
12'-0" (TYP.)
5'-9" *
5'-0" * (TYP.)
35'-0"
12'-8"
26'-0"
14'-0" (TYP.)
7'-0" (TYP.)
4'-0" (TYP.)
8'-0"
3'-6"
2'-9"
24'-0" (TYP.)
4'-0"*
12'-0"
12'-0" (TYP.)
1'-4¾" * (TYP.)
1'-5" * (TYP.)
2'-0" * (TYP.)
12'-0" (TYP.)
5'-0" * (TYP.)
10'-6" (TYP.)
12" Clay
Storm MH T.F.=6.08
San. MH T.F.=6.48 Inv.=0.13
CONCRETE PAVERS (TYP.) (SEE ENLARGED PLAN ON SHEET MDS-5)
CONCRETE PAVERS BAND (TYP.) (SEE ENLARGED PLAN ON SHEET MDS-5)
PRECAST CONCRETE UTILITY BUILDING & BATHROOM (SEE DETAILS ON SHEET A-1)
SEE ENLARGED PLAN FOR PRIVACY FENCE (6' HIGH) ON SHEET MDS-5
PERISTALTIC WASTEWATER PUMP HEAD UNIT REMOVED FROM PROJECT
TRASH CAN (TYP. OF 4) (SEE DETAIL ON SHEET MDS-4)
6' BENCH (TYP. OF 12) (SEE DETAIL ON SHEET MDS-3)
WASTEWATER REMOTE PUMPING CENTER (TYP. OF 2) (SEE SPECIAL PROVISIONS)
24"x24" HANDHOLE (TYP. OF 16) (SEE DETAIL ON SHEET MDS-7)
12"x12" HANDHOLE (TYP. OF 4) (SEE DETAIL ON SHEET MDS-7)
4x8 OAK FENDER ATTACHED TO PIER ALL AROUND (SEE DETAIL ON SHEET STR-6)
TURBIDITY CURTAIN (SEE DETAIL ON SHEET MDS-2)
ALUMINUM LADDER (TYP. OF 4) (SEE DETAIL ON SHEET MDS-2)
Fisher Island Ferry Terminal
AS BUILT
* MEASURED FROM OUTSIDE FASCIA OF CAST-IN-PLACE CONCRETE SLAB
LEGEND
TYPICAL SPAN
PIER BENT
PROPOSED TRANSIENT DOCKAGE
CAST STEEL BOLLARD MOORINGS
CAST STEEL CLEAT
HANDHOLE
BORING
BENCH
DECORATIVE LIGHT POLE & LIGHT FIXTURE
LIGHTED MARINE POWER BOLLARD
WASTEWATER REMOTE PUMPING CENTER
TRASH CAN
CAST-IN-PLACE CONCRETE PILE
12" Ø TIMBER FENDER PILE
SHORE POWER ENCLOSURE
NOTE: SEE UTILITY PLAN FOR DIMENSIONS & LAYOUT OF HANDHOLES AND WASTEWATER REMOTE PUMPING CENTER ON SHEET UT-2.
*NOTE: TIMBER DOLPHIN PILES REMOVED AFTER INSTALL PER CITY OF NEW LONDON
REVISION
DATE
CITY
DESCRIPTION
REVISIONS
City of New London
Connecticut
CITY OF NEW LONDON
SUBMITTED BY: MMI
DATE: 10/18/10
APPROVED BY:
DATE:
CADD - FILENAME: CP-Plan.dwg
DRAWING TITLE:
LAYOUT PLAN
CITY PIER REHABILITATION
PROJECT NO.: 2389-21
DRAWING NO.: LA-1
SHEET NO.: 04

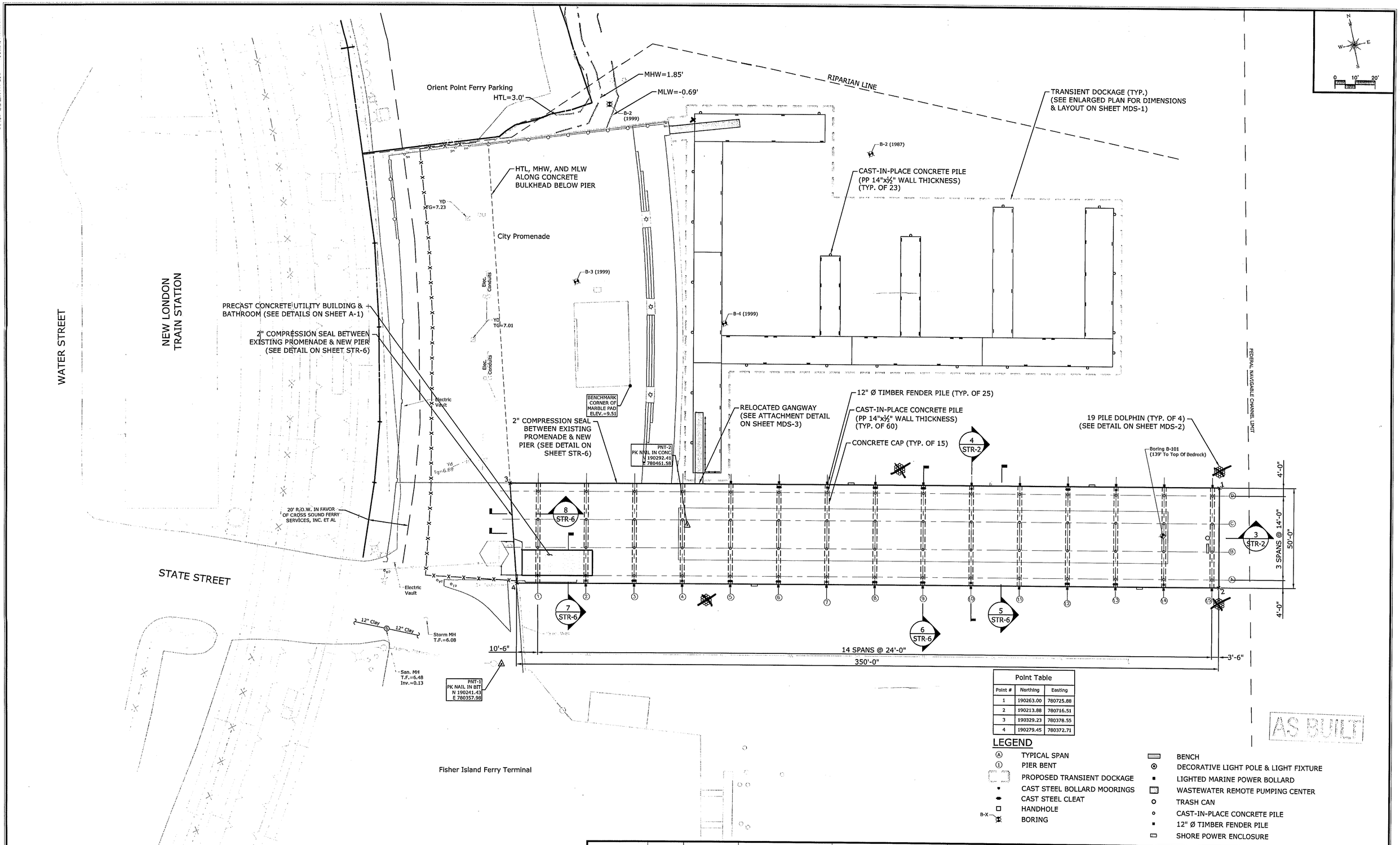

AS BUILT

Point Table		
Point #	Northing	Easting
1	190263.00	780725.88
2	190213.88	780716.51
3	190329.23	780378.55
4	190279.45	780372.71

LEGEND

- Ⓐ TYPICAL SPAN
- ① PIER BENT
- PROPOSED TRANSIENT DOCKAGE
- CAST STEEL BOLLARD MOORINGS
- CAST STEEL CLEAT
- HANDHOLE
- B-X BORING
- BENCH
- DECORATIVE LIGHT POLE & LIGHT FIXTURE
- LIGHTED MARINE POWER BOLLARD
- WASTEWATER REMOTE PUMPING CENTER
- TRASH CAN
- CAST-IN-PLACE CONCRETE PILE
- 12" Ø TIMBER FENDER PILE
- SHORE POWER ENCLOSURE

REVISION	DATE	CITY	DESCRIPTION

REVISIONS

City of New London — Connecticut

CITY OF NEW LONDON

SUBMITTED BY: MMI DATE: 10/18/10
APPROVED BY: DATE:
CADD - FILENAME: CP-Plan.dwg

DRAWING TITLE: STRUCTURAL LAYOUT PLAN

CITY PIER REHABILITATION

PROJECT NO.: 2389-21
DRAWING NO.: STR-1
SHEET NO.: 05

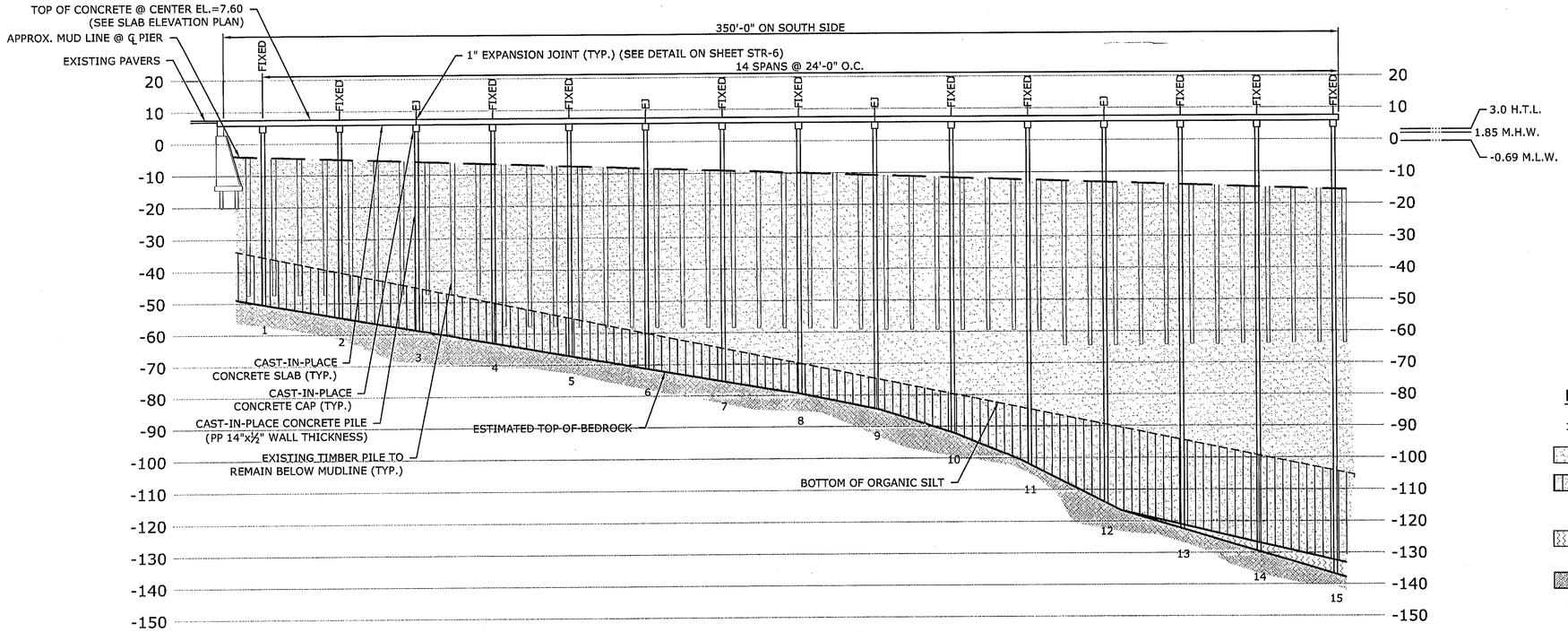

3 STR-2

TYPICAL PIER ELEVATION

SCALE: 1" = 20'-0"

LEGEND

1	PIER BENT
	ORGANIC SILT
	COMPACT (LOCALLY MEDIUM COMPACT) FINE TO COARSE SAND, LITTLE TO SOME GRAVEL, TRACE SILT
	COMPACT FINE TO COARSE SAND, LITTLE GRAVEL, LITTLE SILT
	HARD GRANITIC GNEISS
	EXISTING TIMBER PILE
	CAST-IN-PLACE CONCRETE PILE (PP14xx½" WALL THICKNESS)
EJ	EXPANSION JOINT

CAST-IN-PLACE CONCRETE

ALL CONCRETE SHALL HAVE A MINIMUM 28 DAY COMPRESSIVE STRENGTH OF 4,000 PSI AND SHALL BE CLASS "F". THIS INCLUDES CONCRETE SLABS, BEAMS, CAPS AND THE CONCRETE FOR THE STEEL PILES.

REINFORCING SHALL CONFORM TO ASTM A615, GRADE 60 AND SHALL BE EPOXY COATED.

ALL CONCRETE WORK SHALL CONFORM TO THE REQUIREMENTS OF ACI 318.

CONCRETE COVER SHALL BE AS FOLLOWS:
PILE CAPS AND BEAMS: 2"
DECK SLAB: AS SHOWN

LOCATIONS OF ALL CONSTRUCTION JOINTS AND REINFORCING SPLICES SHALL BE APPROVED BY THE ENGINEER.

ALL EXPOSED CORNERS OF REINFORCING SHALL BE CHAMFERED 1"x1" OR AS SHOWN.

THE CONTRACTOR SHALL NOT STRIP ANY FORMS UNTIL THE CONCRETE HAS REACHED A COMPRESSIVE STRENGTH OF 3,000 PSI.

ALL REINFORCEMENT IN THE SUPERSTRUCTURE INCLUDING THE DECK, CAPS AND BEAMS SHALL BE EPOXY COATED UNLESS OTHERWISE NOTED. THESE BARS SHALL BE INCLUDED IN THE PAY ITEM FOR "DEFORMED STEEL BARS (EPOXY COATED)".

REMAIN-IN-PLACE FORMS: THE USE OF REMAIN-IN-PLACE FORMS ON THIS STRUCTURE IS NOT ALLOWED.

ALL CONDUITS, HANDHOLES, DRAINS, DRAINPIPE & ANCHORS SHALL BE SECURE PRIOR TO POURING CONCRETE.

GENERAL NOTES

CONTRACTOR SHALL TAKE FIELD MEASUREMENTS NECESSARY TO ASSURE PROPER FIT OF THE FINISHED WORK AND SHALL ASSUME RESPONSIBILITY FOR THEIR ACCURACY.

CONTRACTOR WILL BE LIABLE FOR ANY DAMAGE TO EXISTING STRUCTURES CAUSED BY HIS OPERATIONS. CONTRACTOR SHALL TAKE NECESSARY PRECAUTIONS TO PROTECT EXISTING ADJACENT STRUCTURES.

CONTRACTOR TO SUBMIT WORKING DRAWINGS AND SHOP DRAWINGS TO THE ENGINEER FOR APPROVAL PRIOR TO ORDERING MATERIALS OR BEGINNING FABRICATION.

CONTRACTOR TO SUBMIT CONSTRUCTION SEQUENCE TO THE ENGINEER FOR APPROVAL PRIOR TO BEGINNING WORK.

ALL STRUCTURAL STEEL, NUTS, BOLTS, AND PLATES WHICH ARE NOT LABELED ON THE PLANS SHALL BE STAINLESS STEEL.

DESIGN LOADS: LIVE LOAD HS20-44 OR 250 PSF
PLUS DEAD LOAD
UPLIFT PRESSURE OF 300 PSF

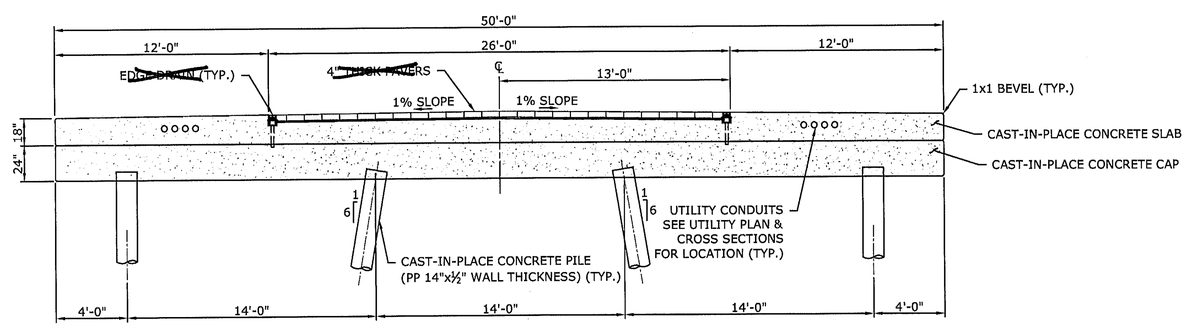

4 STR-2

TYPICAL PIER CROSS SECTION

SCALE: 1/4" = 1'-0"

NOTES:
1. AMENITIES NOT SHOWN FOR CLARITY.
2. SEE SLAB ELEVATION PLAN FOR ELEVATIONS ON SHEET STR-5.

AS BUILT

REVISION	DATE	CITY	DESCRIPTION

REVISIONS

City of New London Connecticut

CITY OF NEW LONDON

SUBMITTED BY: MMI DATE: 10/18/10
APPROVED BY: DATE:
CADD - FILENAME: CP-Proposed-Elevation+Section.dwg

DRAWING TITLE: ELEVATION, SECTION & NOTES

CITY PIER REHABILITATION

PROJECT NO: 2389-21
DRAWING NO: STR-2
SHEET NO: 06

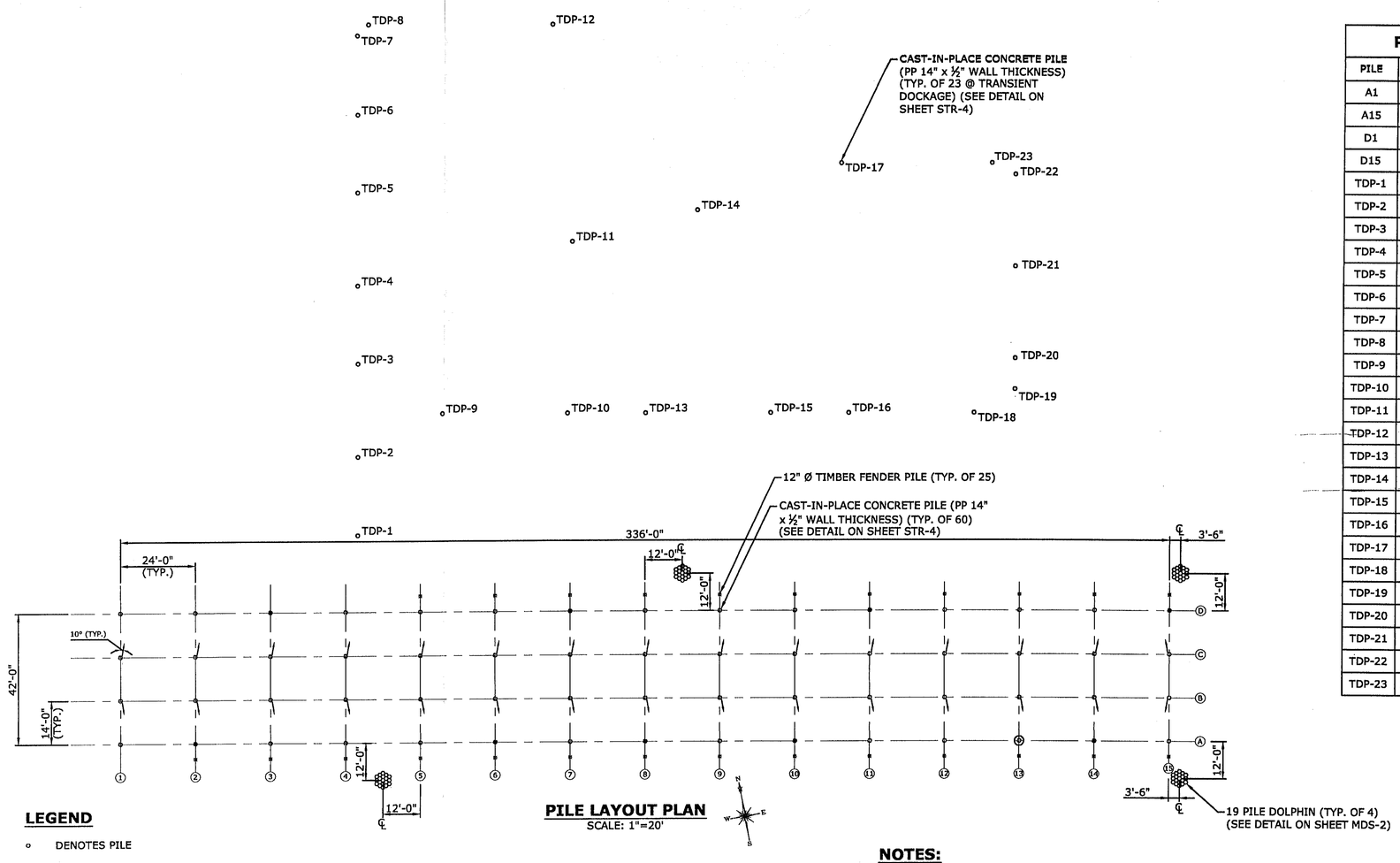

PILE LAYOUT PLAN

SCALE: 1"=20'

LEGEND

- ∘ DENOTES PILE
- • DENOTES ROCK ANCHOR PILE (TYP. OF 9)
- DENOTES BATTERED PILE, SLOPE 6:1 W/ 10° ROTATION (TYP. OF 30)
- ◎ DENOTES TEST PILE (TYP. OF 1)
- TDP-X∘ TRANSIENT DOCKAGE PILE
- ▪ 12" Ø TIMBER FENDER PILE (TYP. OF 25)

NOTES:

1. PRIOR TO DRIVING PILES, THE CONTRACTOR SHALL SUBMIT TO THE ENGINEER FOR REVIEW AND APPROVAL HIS METHOD AND SEQUENCE OF PILE DRIVING.
2. ALL 12" Ø TIMBER FENDER PILES SHALL BE 40 FEET IN LENGTH. TOP OF PILE ELEVATION = 8.50

Point Table

PILE	Northing	Easting
A1	190281.41	780383.77
A15	190218.47	780713.82
D1	190322.67	780391.64
D15	190259.72	780721.69
TDP-1	190332.42	780471.29
TDP-2	190356.97	780475.97
TDP-3	190386.44	780481.59
TDP-4	190411.00	780486.28
TDP-5	190440.47	780491.90
TDP-6	190465.03	780496.58
TDP-7	190490.57	780501.45
TDP-8	190493.42	780505.64
TDP-9	190365.57	780505.18
TDP-10	190358.08	780544.48
TDP-11	190411.99	780556.28
TDP-12	190482.36	780563.60
TDP-13	190353.39	780569.03
TDP-14	190414.32	780597.45
TDP-15	190345.90	780608.33
TDP-16	190341.22	780632.88
TDP-17	190420.43	780645.44
TDP-18	190333.73	780672.17
TDP-19	190338.72	780686.45
TDP-20	190348.55	780688.32
TDP-21	190377.52	780693.85
TDP-22	190406.50	780699.37
TDP-23	190411.44	780692.59

PILE	ESTIMATED PILE LENGTH (FT.)	PILE TIP ELEV.
A1	57	-71.05
B1	67	-74.53
C1	67	-55.99
D1	57	-65.95
A2	60	-77.45
B2	70	-75.62
C2	70	-70.67
D2	60	-69.38
A3	64	-79.01
B3	75	-79.58
C3	75	-72.11
D3	64	-77.69
A4	67	-81.55
B4	78	-82.57
C4	78	-77.53
D4	67	-80.65
A5	73	-77.80
B5	85	-78.19
C5	85	-80.65
D5	73	-78.86
A6	76	-86.35
B6	89	-88.45
C6	89	-76.22
D6	76	-75.07
A7	80	-74.71
B7	93	-74.16
C7	93	-78.68
D7	80	-77.61
A8	85	-78.95
B8	99	-80.62
C8	99	-83.42
D8	85	-80.52
A9	90	-77.40
B9	105	-84.02
C9	105	-85.54
D9	90	-88.69
A10	97	-90.73
B10	113	-90.21
C10	113	-97.04
D10	97	-96.34
A11	107	-95.70
B11	125	-98.36
C11	125	-103.34
D11	107	-107.17
A12	120	-109.17
B12	140	-109.04
C12	140	-120.55
D12	120	-121.45
A13	128	-110.65
B13	150	-110.27
C13	150	-127.12
D13	128	-130.52
A14	135	-124.86
B14	158	-124.25
C14	158	-135.91
D14	135	-136.45
A15	143	-138.23
B15	167	-133.79
C15	167	-141.99
D15	143	-146.17

PILE	ESTIMATED PILE LENGTH (FT.)	PILE TIP ELEV
TDP-1	70	-63.37
TDP-2	70	-66.67
TDP-3	70	-60.53
TDP-4	70	-67.53
TDP-5	70	-57.53
TDP-6	70	-62.75
~~TDP-7~~	70	
TDP-8	70	-68.42
TDP-9	75	-67.17
TDP-10	80	-75.62
TDP-11	80	-84.50
TDP-12	80	-90.53
TDP-13	85	-83.21
TDP-14	85	-102.33
TDP-15	95	-112.50
TDP-16	110	-116.33
TDP-17	110	-122.25
TDP-18	120	-111.15
TDP-19	125	-124.79
TDP-20	125	-123.53
TDP-21	125	-125.17
TDP-22	125	-134.92
TDP-23	125	-132.50

AS BUILT

REVISION	DATE	CITY	DESCRIPTION
2	12/3/10		ADDENDUM #4

REVISIONS

City of New London Connecticut

CITY OF NEW LONDON

SUBMITTED BY: MMI DATE: 10/18/10

APPROVED BY: DATE:

CADD - FILENAME: CP-STR.dwg

DRAWING TITLE: PILE LAYOUT PLAN

CITY PIER REHABILITATION

PROJECT NO.: 2389-21

DRAWING NO.: STR-3

SHEET NO.: 07

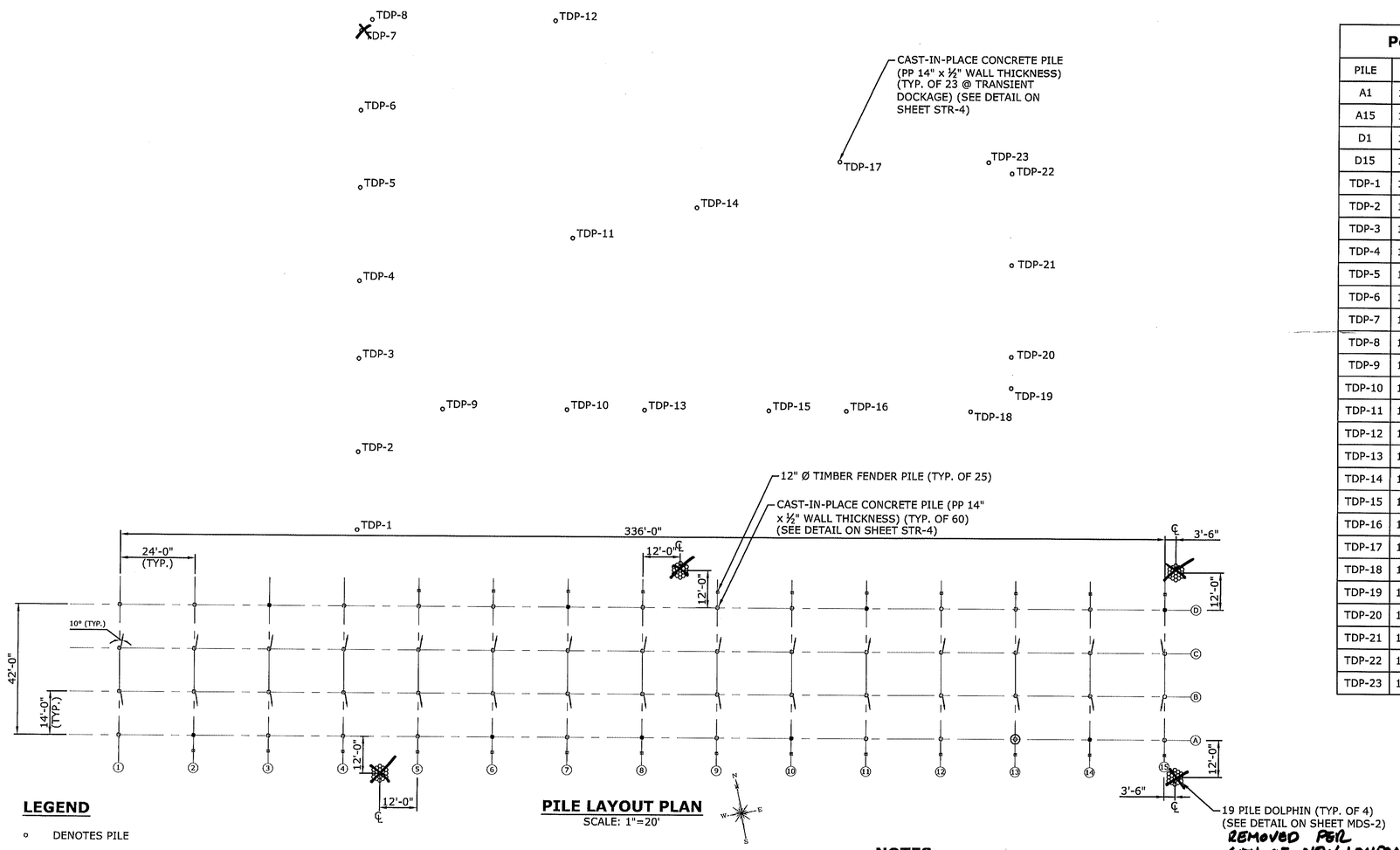

PILE LAYOUT PLAN

SCALE: 1"=20'

LEGEND

- ○ DENOTES PILE
- • DENOTES ROCK ANCHOR PILE (TYP. OF 9)
- DENOTES BATTERED PILE, SLOPE 6:1 W/ 10° ROTATION (TYP. OF 30)
- ◎ DENOTES TEST PILE (TYP. OF 1)
- TDP-X○ TRANSIENT DOCKAGE PILE
- * 12" Ø TIMBER FENDER PILE (TYP. OF 25)

NOTES:

1. PRIOR TO DRIVING PILES, THE CONTRACTOR SHALL SUBMIT TO THE ENGINEER FOR REVIEW AND APPROVAL HIS METHOD AND SEQUENCE OF PILE DRIVING.
2. ALL 12" Ø TIMBER FENDER PILES SHALL BE 40 FEET IN LENGTH. TOP OF PILE ELEVATION = 8.50

Point Table

PILE	Northing	Easting
A1	190281.41	780383.77
A15	190218.47	780713.82
D1	190322.67	780391.64
D15	190259.72	780721.69
TDP-1	190332.42	780471.29
TDP-2	190356.97	780475.97
TDP-3	190386.44	780481.59
TDP-4	190411.00	780486.28
TDP-5	190440.47	780491.90
TDP-6	190465.03	780496.58
TDP-7	190490.57	780501.45
TDP-8	190493.42	780505.64
TDP-9	190365.57	780505.18
TDP-10	190358.08	780544.48
TDP-11	190411.99	780556.28
TDP-12	190482.36	780563.60
TDP-13	190353.39	780569.03
TDP-14	190414.32	780597.45
TDP-15	190345.90	780608.33
TDP-16	190341.22	780632.88
TDP-17	190420.43	780645.44
TDP-18	190333.73	780672.17
TDP-19	190338.72	780686.45
TDP-20	190348.55	780688.32
TDP-21	190377.52	780693.85
TDP-22	190406.50	780699.37
TDP-23	190411.44	780692.59

PILE	ESTIMATED PILE LENGTH (FT.)	ESTIMATED LENGTH OF ROCK ANCHOR (FT.)
A1	57	
B1	67	
C1	67	
D1	57	
A2	60	91
B2	70	
C2	70	
D2	60	
A3	64	
B3	75	
C3	75	
D3	64	95
A4	67	
B4	78	
C4	78	
D4	67	
A5	73	
B5	85	
C5	85	
D5	73	
A6	76	107
B6	89	
C6	89	
D6	76	
A7	80	
B7	93	
C7	93	
D7	80	111
A8	85	115
B8	99	
C8	99	
D8	85	
A9	90	
B9	105	
C9	105	
D9	90	
A10	97	128
B10	113	
C10	113	
D10	97	
A11	107	
B11	125	
C11	125	
D11	107	138
A12	120	
B12	140	
C12	140	
D12	120	
A13	128	
B13	150	
C13	150	
D13	128	
A14	135	166
B14	158	
C14	158	
D14	135	
A15	143	
B15	167	
C15	167	
D15	143	174

PILE	ESTIMATED PILE LENGTH (FT.)	ESTIMATED LENGTH OF ROCK ANCHOR (FT.)
TDP-1	70	
TDP-2	70	
TDP-3	70	
TDP-4	70	
TDP-5	70	
TDP-6	70	
~~TDP-7~~	70	REMOVED
TDP-8	70	
TDP-9	75	
TDP-10	80	
TDP-11	80	
TDP-12	80	
TDP-13	85	
TDP-14	85	
TDP-15	95	
TDP-16	110	
TDP-17	110	
TDP-18	120	
TDP-19	125	
TDP-20	125	
TDP-21	125	
TDP-22	125	
TDP-23	125	

AS BUILT

REVISION	DATE	CITY	DESCRIPTION
2	12/3/10		ADDENDUM #4

REVISIONS

City of New London Connecticut

CITY OF NEW LONDON

SUBMITTED BY: MMI DATE: 10/18/10

APPROVED BY: DATE:

CADD - FILENAME: CP-STR.dwg

DRAWING TITLE: PILE LAYOUT PLAN

CITY PIER REHABILITATION

PROJECT NO.: 2389-21

DRAWING NO.: STR-3

SHEET NO.: 07

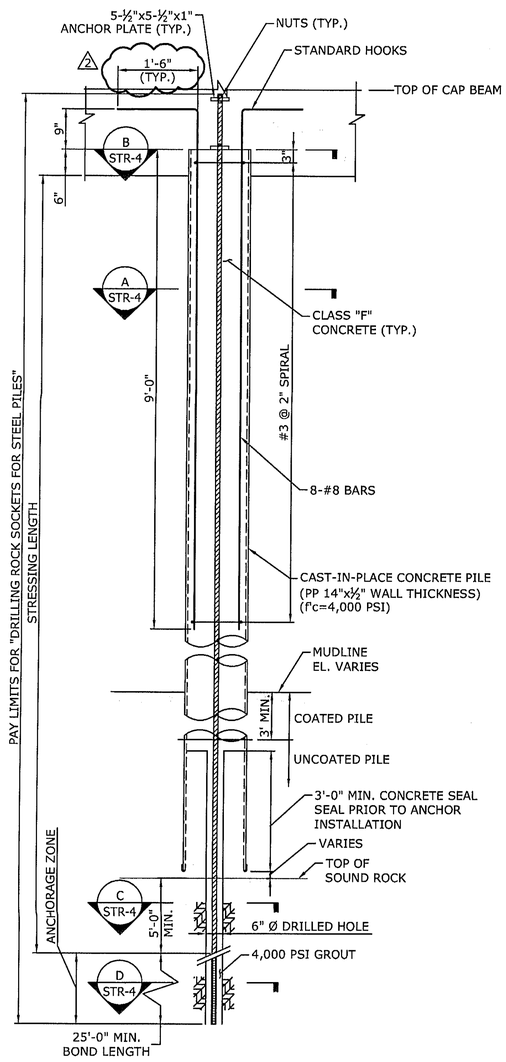

CONCRETE FILLED PILE W/ ROCK ANCHOR
SCALE: ¾"=1'-0"

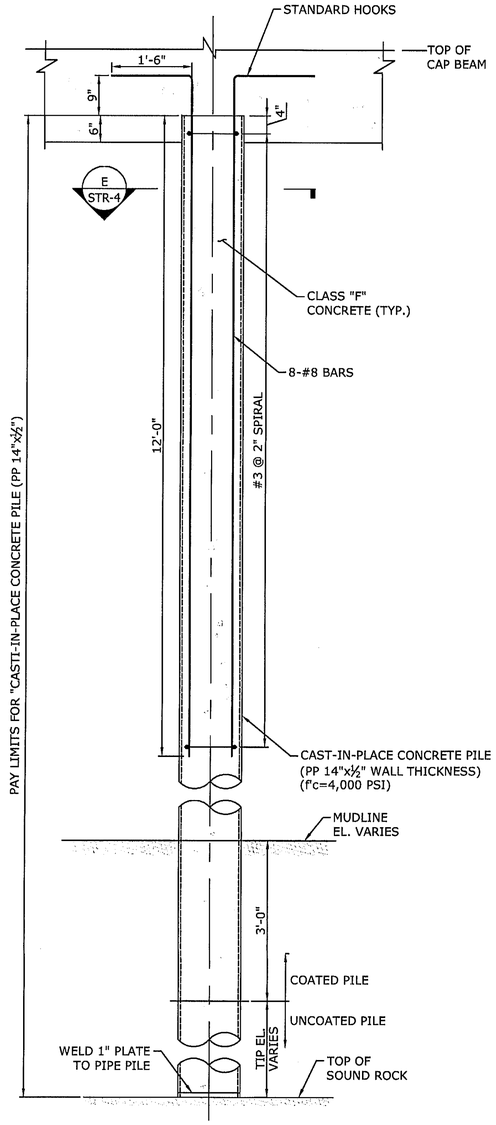

TYPICAL CAST-IN-PLACE CONCRETE PILE
SCALE: ¾"=1'-0"

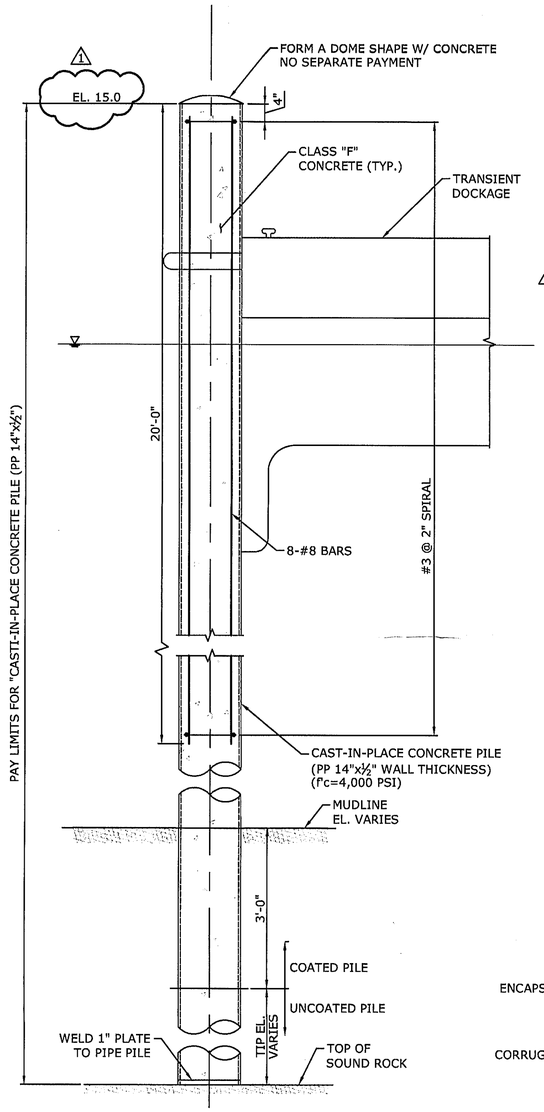

TYPICAL CAST-IN-PLACE CONCRETE PILE @ TRANSIENT DOCKAGE
SCALE: ¾"=1'-0"

CAST-IN-PLACE CONCRETE PILES

THE SITE AREAS IN WHICH PILES ARE TO BE DRIVEN CONTAIN MISCELLANEOUS MATERIALS. THE CONTRACTOR SHALL REMOVE THESE OBSTRUCTIONS AS NECESSARY TO DRIVE THE PILES AND PERFORM THE CONSTRUCTION. NO SEPARATE PAYMENT SHALL BE MADE FOR THE REMOVAL OF OTHER MATERIALS. THE COST FOR THIS WORK SHALL BE INCLUDED IN THE GENERAL COST OF THE WORK.

NO PAYMENT SHALL BE MADE FOR ABANDONED OR DAMAGED PILES DURING DRIVING.

1 PIPE PILES SHALL BE OF SEAMLESS GRADE, A252 STEEL, AND SHALL BE EPOXY COATED. PILES SHALL BE COATED WITH A FUSION BONDED EPOXY, SHOP APPLIED AND TOUCHED-UP AS REQUIRED. MINIMUM COATING THICKNESS SHALL BE ~~X~~" 18 MILS.

ALL PILES SHALL BE DRIVEN PLUMB OR AN A BATTER AND SHALL BE DRIVEN TO REFUSAL ON BEDROCK. OUT OF TOLERANCE PILES SHALL BE REMOVED OR REPLACED AS DIRECTED BY THE ENGINEER AT NO ADDITIONAL COST.

CONCRETE SHALL HAVE A 28 DAY COMPRESSIVE STRENGTH OF 4,000 PSI AND SHALL BE CLASS "F". REINFORCING SHALL BE EPOXY COATED.

ALL PILES SHALL BE PROTECTED WITH TEMPORARY STEEL CAPS IMMEDIATELY AFTER DRIVING. CAPS SHALL REMAIN IN PLACE UNTIL FINAL CONCRETING.

2 1 ~~FOUR THREE~~ ONE TEST PILE SHALL BE COMPRESSION LOAD TESTED PER ASTM 1143.

PILES SHALL NOT BE OUT OF POSITION BY MORE THAN 2 INCHES IN ANY DIRECTION.

PRESTRESSED ROCK ANCHORS

PRESTRESSED ROCK ANCHORS SHALL CONFORM TO THE REQUIREMENTS OF THE SPECIFICATIONS AND TO THE "RECOMMENDATIONS FOR PRESTRESSED ROCK ANCHORS" AS PREPARED BY THE POST TENSIONING INSTITUTE.

TENDON SHALL BE DOUBLE CORROSION PROTECTION CLASS I COATED PER ASTM A775.

DESIGN ANCHOR LOAD IS 100 KIPS.

ONE ROCK ANCHOR SHALL BE PERFORMANCE TESTED AND ALL ANCHORS SHALL BE PROOF TESTED.

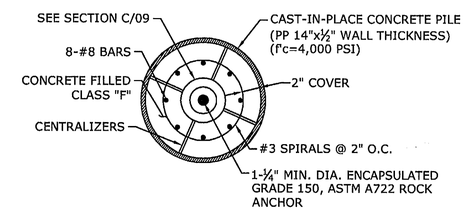

A STR-4 **SECTION**
SCALE: 1 ½"=1'-0"

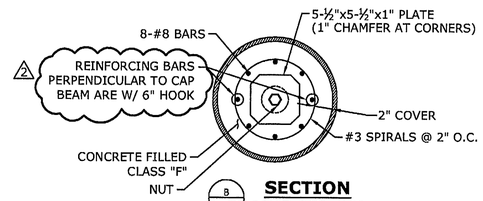

B STR-4 **SECTION**
SCALE: 1 ½"=1'-0"

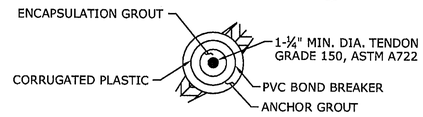

C STR-4 **SECTION**
NOT TO SCALE

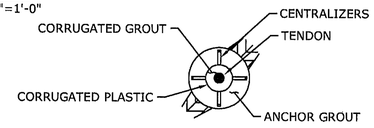

D STR-4 **SECTION**
NOT TO SCALE

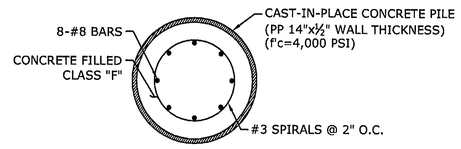

E STR-4 **SECTION**
SCALE: 1 ½"=1'-0"

AS BUILT

REVISIONS			
1	11/19/10		ADDENDUM #3
2	12/3/10		ADDENDUM #4
REVISION	DATE	CITY	DESCRIPTION

City of New London 1646 1784 Connecticut

CITY OF NEW LONDON

SUBMITTED BY: MMI DATE: 10/18/10
APPROVED BY: DATE:
CADD - FILENAME: CP-STR.dwg

DRAWING TITLE:
PILE DETAILS & NOTES

CITY PIER REHABILITATION

PROJECT NO.: 2389-21
DRAWING NO.: STR-4
SHEET NO.: 08

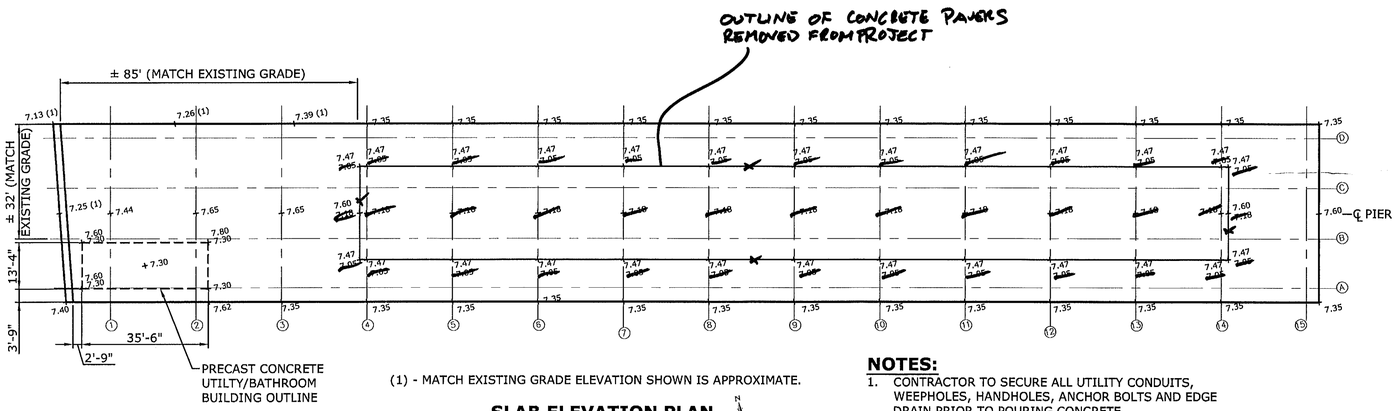

(1) - MATCH EXISTING GRADE ELEVATION SHOWN IS APPROXIMATE.

SLAB ELEVATION PLAN

SCALE: 1"=20'

NOTES:

1. CONTRACTOR TO SECURE ALL UTILITY CONDUITS, WEEPHOLES, HANDHOLES, ANCHOR BOLTS AND EDGE DRAIN PRIOR TO POURING CONCRETE.
2. TOP OF CONCRETE PAVERS ELEV. @ CENTER OF PIER IS SET @ 7.60. *

* CONCRETE PAVERS REMOVED FROM PROJECT, ELEVATIONS REMAINED THE SAME

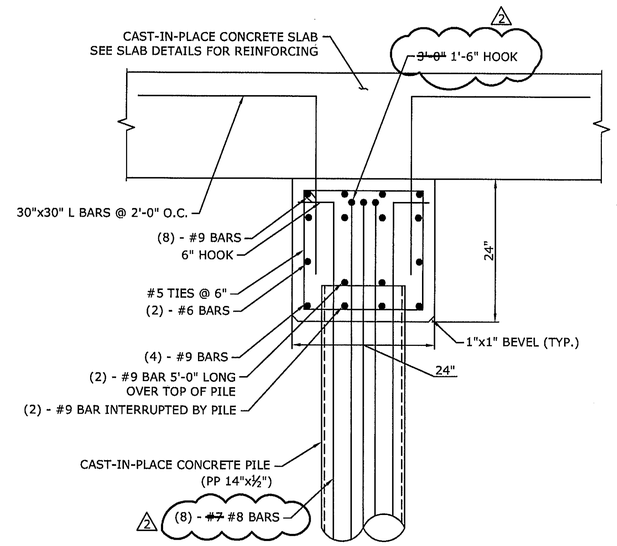

9 STR-5 **TYPICAL CAP SECTION @ FIXED LOCATIONS**

SCALE: 1"=1'-0"

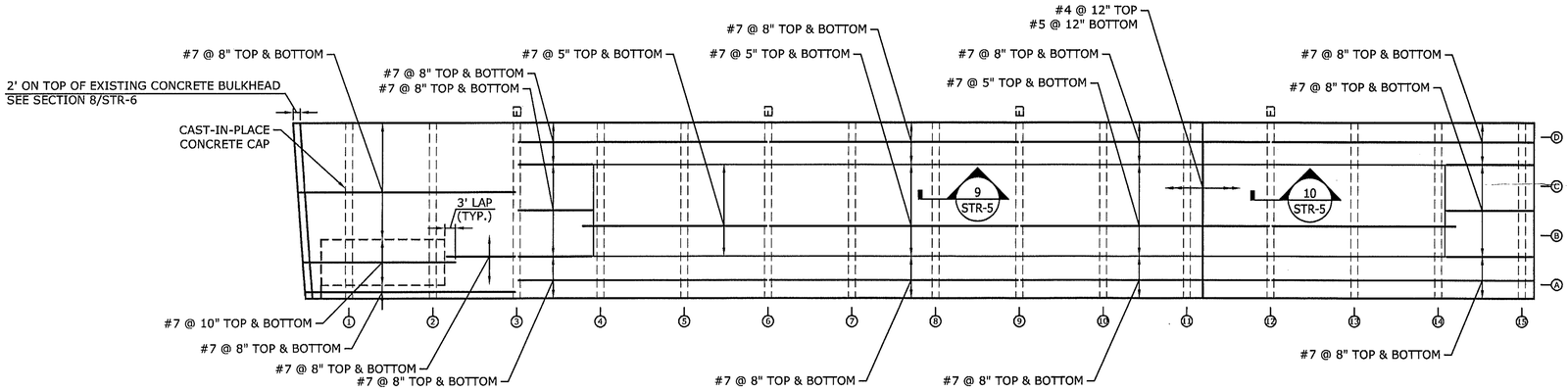

FRAMING PLAN

SCALE: 1"=20'

NOTES:

1. CONTRACTOR TO SUBMIT CONSTRUCTION JOINT LOCATIONS FOR APPROVAL TO THE ENGINEER.

EJ - EXPANSION JOINT

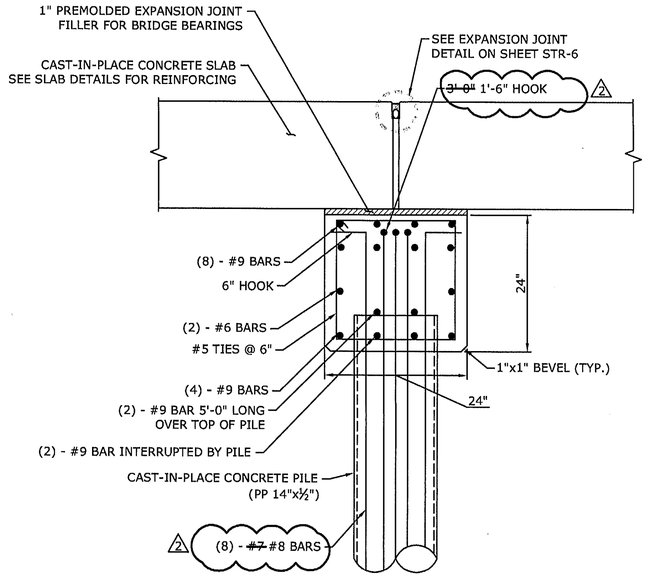

10 STR-5 **TYPICAL CAP SECTION @ EXPANSION JOINT LOCATIONS**

SCALE: 1"=1'-0"

AS BUILT

REVISION	DATE	CITY	DESCRIPTION
2	12/3/10		ADDENDUM #4

REVISIONS

City of New London Connecticut

CITY OF NEW LONDON

SUBMITTED BY: DATE:

APPROVED BY: DATE:

CADD - FILENAME: CP-Framing-Slab.dwg

DRAWING TITLE: SLAB & FRAMING PLAN & CAP DETAILS

CITY PIER REHABILITATION

PROJECT NO.: 2389-21

DRAWING NO.: STR-5

SHEET NO.: 09

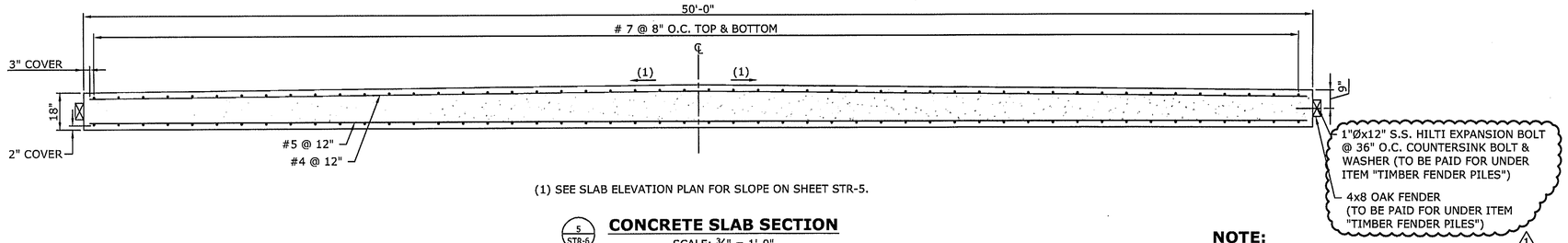

(1) SEE SLAB ELEVATION PLAN FOR SLOPE ON SHEET STR-5.

5 STR-6 **CONCRETE SLAB SECTION**
SCALE: ⅜" = 1'-0"

NOTE:
OAK FENDER ALL AROUND THE PIER.
STOP @ GANGWAY ON NORTH SIDE.

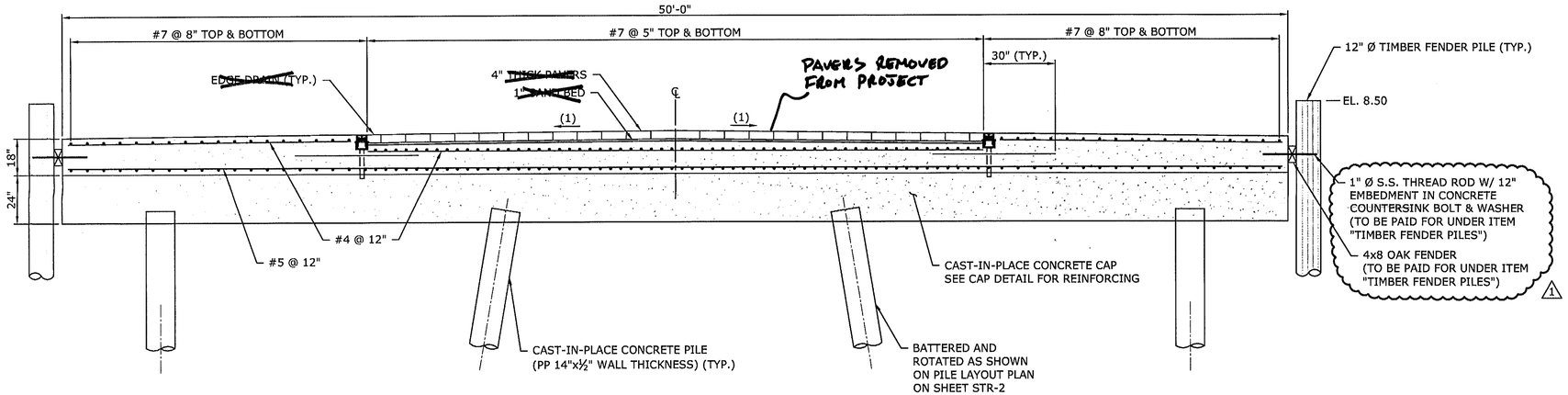

(1) SEE ELEVATION PLAN FOR SLOPE ON SHEET STR-5.

6 STR-6 **CONCRETE SLAB SECTION**
SCALE: ⅜" = 1'-0"

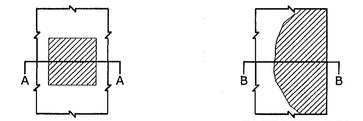

ELEVATION **ELEVATION**

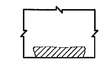

SECTION A-A **SECTION B-B**

SURFACE SPALLING
NOT TO SCALE

SPALLING AND/OR CRACKS AT CORNER
NOT TO SCALE

NOTES
1. THE CONTRACTOR SHALL NOT PERFORM ANY REPAIR WORK WITHOUT PRIOR APPROVAL OF THE ENGINEER.
2. PATCH REPAIRS INCLUDE REMOVAL OF ALL DETERIORATED, LOOSE, SPALLED, AND HONEYCOMBED CONCRETE ALONG WITH SANDBLASTING AND CLEANING OF ALL CONCRETE AREAS TO BE PATCHED.

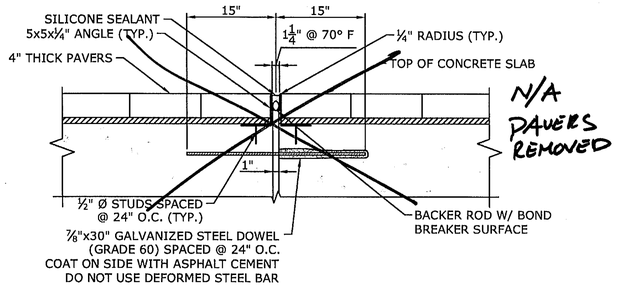

N/A PAVERS REMOVED

EXPANSION JOINT DETAIL @ PAVERS
SCALE: 1"=1'-0"

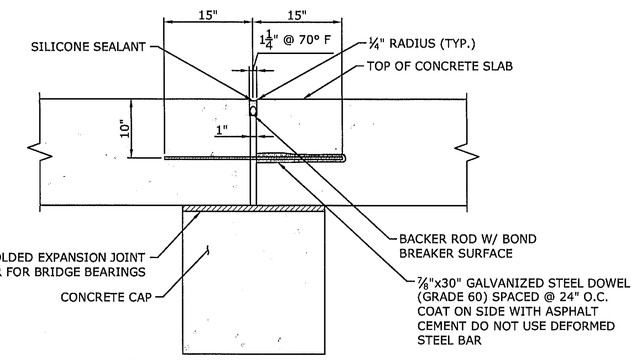

EXPANSION JOINT DETAIL
SCALE: 1"=1'-0"

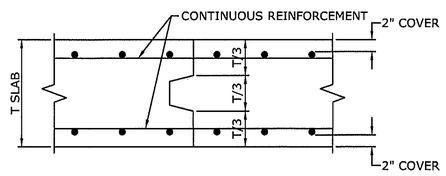

TYPICAL CONCRETE SLAB CONSTRUCTION JOINT DETAIL
SCALE: 1"=1'-0"

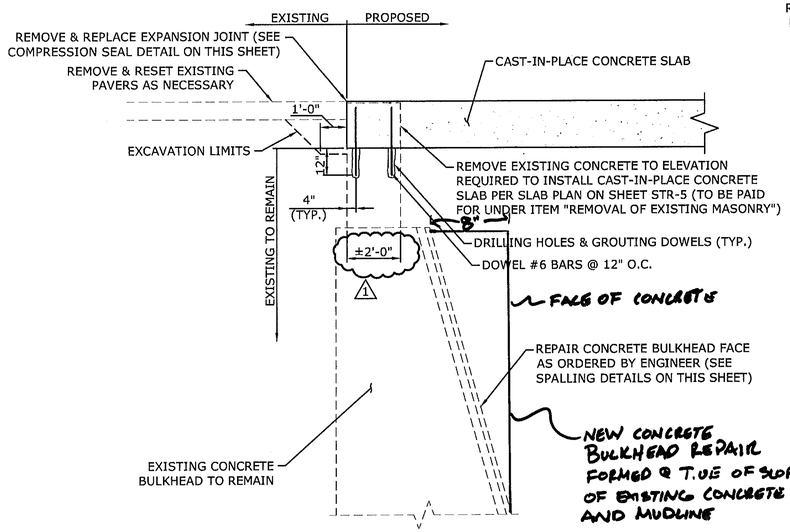

8 STR-6 **SECTION**
SCALE: ⅜"=1'-0"

NOTE
ALL EXCAVATION & BACKFILL BEHIND EXISTING BULKHEAD TO BE PAID FOR UNDER ITEM "REMOVE & RESET EXISTING PAVERS".

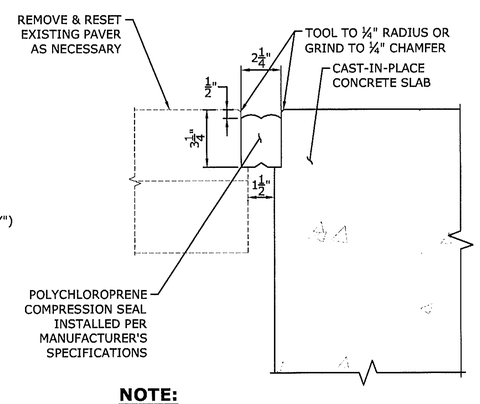

NOTE:
ALL CONTACTING SURFACES BETWEEN THE COMPRESSION SEAL AND CONCRETE SHALL BE THOROUGHLY COATED WITH A LUBRICANT-ADHESIVE.

COMPRESSION SEAL DETAIL
SCALE: 3"=1'-0"

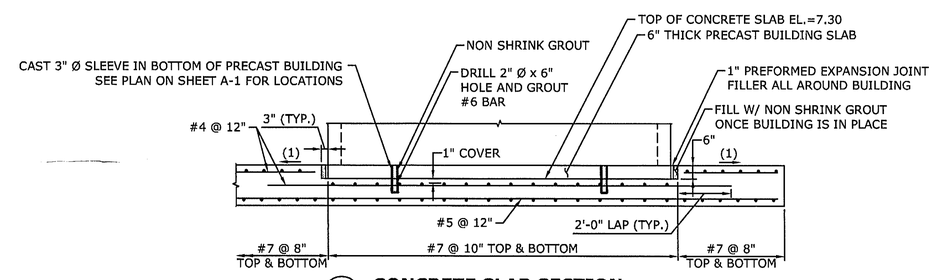

7 STR-6 **CONCRETE SLAB SECTION**
SCALE: ⅜"=1'-0"

AS BUILT

REVISION	DATE	CITY	DESCRIPTION
1	11/19/10		ADDENDUM #3

REVISIONS

City of New London Connecticut

CITY OF NEW LONDON

SUBMITTED BY: MMI DATE: 10/18/10
APPROVED BY: DATE:
CADD - FILENAME: CP-STR.dwg

DRAWING TITLE: STRUCTURAL DETAILS
CITY PIER REHABILITATION

PROJECT NO.: 2389-21
DRAWING NO.: STR-6
SHEET NO.: 10

CLARENCE WELTI ASSOC., INC.
P.O. BOX 397
GLASTONBURY, CONN 06033

CLIENT: MILONE & MACBROOM
PROJECT NAME: CITY PIER
LOCATION: NEW LONDON, CT

	AUGER	CASING	SAMPLER	CORE BAR.	OFFSET
TYPE		NW	SS	BQ	LINE & STA.
SIZE I.D.		3.0"	1.375"	1.5"	N. COORDINATE
HAMMER WT			140 lbs		E. COORDINATE
HAMMER FALL			30"		

HOLE NO. B-101
GROUND WATER OBSERVATIONS — AT ___ FT AFTER ___ HOURS — AT ___ FT AFTER ___ HOURS
START DATE 12/11/09
FINISH DATE 12/14/09

DEPTH	SAMPLE NO.	BLOWS/6"	DEPTH	A	STRATUM DESCRIPTION + REMARKS	ELEV.
0					CONCRETE — BLACK FINE-CRS. SAND, LITTLE SILT, ASH - FILL	0.5
					CONCRETE	4.0
5					AIR	4.5
					WATER	8.0
10						
15	1	W-O-H	14.50'-16.50'		BLACK ORGANIC SILT	14.5
20						
25						
					GREY ORGANIC SILT, LITTLE CLAY, LITTLE SHELL FRAGMENTS	28.0
30	2	W-O-H	30.00'-32.00'			
35						

LEGEND: COL. A=RECOVERY "
SAMPLE TYPE: D=DRY A=AUGER C=CORE U=UNDISTURBED PISTON S=SPLIT SPOON
PROPORTIONS USED: TRACE=0-10%, LITTLE=10-20%, SOME=20-35%, AND=35-50%

DRILLER: J. BREWER
INSPECTOR:
SHEET 1 OF 4 HOLE NO. B-101

CLARENCE WELTI ASSOC., INC.
P.O. BOX 397
GLASTONBURY, CONN 06033

CLIENT: MILONE & MACBROOM
PROJECT NAME: CITY PIER
LOCATION: NEW LONDON, CT

DEPTH	SAMPLE NO.	BLOWS/6"	DEPTH	A	STRATUM DESCRIPTION + REMARKS	ELEV.
	3	W-O-H	35.00'-37.00'			
40						
	4	W-O-H	40.00'-42.00'			
45						
	5	W-O-H	45.00'-47.00'			
50						
	6	W-O-H	50.00'-52.00'			
55						
	7	W-O-H	55.00'-57.00'			
60						
	8	W-O-H	60.00'-62.00'			
65						
	9	W-O-H	65.00'-67.00'			
70						
	10	W-O-H	70.00'-72.00'			
75						

LEGEND: COL. A=RECOVERY "
SAMPLE TYPE: D=DRY A=AUGER C=CORE U=UNDISTURBED PISTON S=SPLIT SPOON
PROPORTIONS USED: TRACE=0-10%, LITTLE=10-20%, SOME=20-35%, AND=35-50%

DRILLER: J. BREWER
INSPECTOR:
SHEET 2 OF 4 HOLE NO. B-101

CLARENCE WELTI ASSOC., INC.
P.O. BOX 397
GLASTONBURY, CONN 06033

CLIENT: MILONE & MACBROOM
PROJECT NAME: CITY PIER
LOCATION: NEW LONDON, CT

DEPTH	SAMPLE NO.	BLOWS/6"	DEPTH	A	STRATUM DESCRIPTION + REMARKS	ELEV.
	11	W-O-H	75.00'-77.00'			
80						
	12	W-O-H	80.00'-82.00'			
85						
	13	W-O-H	85.00'-87.00'			
90						
	14	W-O-H	90.00'-92.00'			
95						
	15	W-O-H	95.00'-97.00'			
100						
	16	W-O-H	100.00'-102.00'			
105						
	17	W-O-H	105.00'-107.00'			
110						
	18	W-O-H	110.00'-112.00'			
115						
					BLACK SILT, LITTLE FINE SAND	108.0
					GREY/BR. FINE-CRS. SAND, LITTLE GRAVEL, TRACE SILT	111.0

LEGEND: COL. A=RECOVERY "
SAMPLE TYPE: D=DRY A=AUGER C=CORE U=UNDISTURBED PISTON S=SPLIT SPOON
PROPORTIONS USED: TRACE=0-10%, LITTLE=10-20%, SOME=20-35%, AND=35-50%

DRILLER: J. BREWER
INSPECTOR:
SHEET 3 OF 4 HOLE NO. B-101

CLARENCE WELTI ASSOC., INC.
P.O. BOX 397
GLASTONBURY, CONN 06033

CLIENT: MILONE & MACBROOM
PROJECT NAME: CITY PIER
LOCATION: NEW LONDON, CT

DEPTH	SAMPLE NO.	BLOWS/6"	DEPTH	A	STRATUM DESCRIPTION + REMARKS	ELEV.
	19	50-60	115.00'-116.00'			
120						
	20	27-14-9	120.00'-121.50'			
					GREY FINE-CRS SAND, TRACE SILT	121.0
125						
	21	37-12-12	125.00'-126.50'			
130						
	22	12-8-8	130.00'-131.50'			
135						
	23	10-12-44	135.00'-136.50'			
					BR. FINE-CRS. SAND, LITTLE SILT & GRAVEL, TRACE ROCK FRAGMENTS	136.5
140	C-1		139.50'-144.50'			
					CORED BEDROCK - GRANITIC GNEISS	139.5
					RUN #1 139.5' - 144.5' RECOVERED 60" RQD=73%	
145						
					BOTTOM OF BORING @ 144.5'	144.5
150						
155						

LEGEND: COL. A=RECOVERY "
SAMPLE TYPE: D=DRY A=AUGER C=CORE U=UNDISTURBED PISTON S=SPLIT SPOON
PROPORTIONS USED: TRACE=0-10%, LITTLE=10-20%, SOME=20-35%, AND=35-50%

DRILLER: J. BREWER
INSPECTOR:
SHEET 4 OF 4 HOLE NO. B-101

CLARENCE WELTI ASSOC., INC.
P.O.BOX 397
GLASTONBURY, CONN. 06033

"BORING LOG"

PROJ. New London, CT
CLIENT CITY OF NEW LONDON

BORING NO. 1 (1987) sheet 1 of 2
LINE & STA.
OFFSET
GR. ELEV.

A STRATUM DESCRIPTION	BLOWS PER 6"	B
WATER		
20.5		
blk.organic silt	1/18"	
26.0		
gr.organic silt	1/18"	
	1/18"	
	1-0-1	
45.0	1/18"	

BORING NO.
LINE & STA.
OFFSET
GR. ELEV.

A STRATUM DESCRIPTION	BLOWS PER	B
	1/18"	
gr.organic silt	1/18"	
	1-0-1	
	1/18"	
	1/18"	
	1-0-1	
	1-1-1	
	1-2-2	
90.0	1-1-2	

1. COL. A strata depth
2. COL. B
3. HAMMER = 140#; FALL 30"

Trio Printers # 1127

AND - 40 to 50%

CLARENCE WELTI ASSOC., INC.
P.O.BOX 397
GLASTONBURY, CONN. 06033

"BORING LOG"

PROJ. New London, CT
CLIENT CITY OF NEW LONDON

BORING NO. 1 (1987) sheet 2 of 2
LINE & STA.
OFFSET
GR. ELEV.

A STRATUM DESCRIPTION	BLOWS PER	B
gr.organic silt	1-2-2	
96.0		
gr.fine-med.sand, some gravel & cobbles	53-76	
102.0		
br/gr.fine-crs.sand, some cobbles & gravel,tr.boulders & silt	79/6"	
106.0		
ROLLER BIT REFUSAL @ 106.0' 20' of WATER AT END OF HOLE 5.0' to WATER FROM BENCH MARK		
DATE: 5/12-13/87 DRILLER: MOODIE		

BORING NO.
LINE & STA.
OFFSET
GR. ELEV.

A STRATUM DESCRIPTION	BLOWS PER	B

1. COL. A strata depth
2. COL. B
3. HAMMER = 140#; FALL 30"

Trio Printers # 1127

AND - 40 to 50%

CLARENCE WELTI ASSOC., INC.
P.O.BOX 397
GLASTONBURY, CONN. 06033

"BORING LOG"

PROJ. New London, CT
CLIENT CITY OF NEW LONDON

BORING NO. 2 (1987) sheet 1 of 2
LINE & STA.
OFFSET
GR. ELEV.

A STRATUM DESCRIPTION	BLOWS PER 6"	B
WATER		
26.0		
blk. & gr.organic silt	1/24"	
34.0		
gr.organic silt	1/24"	
	1/24"	
2" TUBE (#1)43'-45' rec.24"		
45.0		

BORING NO.
LINE & STA.
OFFSET
GR. ELEV.

A STRATUM DESCRIPTION	BLOWS PER	B
	1/24"	
gr.organic silt	1/24"	
	1/24"	
2" TUBE (#2) 63'-65' rec.24" gr.organic silt		
	1-0-1-0	
	1-0-1-0	
	1-0-1-1	
2" TUBE (#3) 83'-85' rec.20"		
90.0	1-1-2-2	

1. COL. A strata depth
2. COL. B
3. HAMMER = 140#; FALL 30"

Trio Printers # 1127

AND - 40 to 50%

CLARENCE WELTI ASSOC., INC.
P.O.BOX 397
GLASTONBURY, CONN. 06033

"BORING LOG"

PROJ. New London, CT
CLIENT CITY OF NEW LONDON

BORING NO. 2 (1987) sheet 2 of 2
LINE & STA.
OFFSET
GR. ELEV.

A STRATUM DESCRIPTION	BLOWS PER 6"	B
gr.organic silt	1-1-2-2	
99.0		
br/gr.organic silt, tr.sand	2-4-5-8	
102.0		
gr.fine-crs.sand, tr.to some gravel, tr.cobbles	14-19-21-24	
	17-11-2 7-34	
	21-22-39-40	
117.0		
br.fine-crs.sand, some gravel & cobbles,tr.silt	29-47-83	
122.3		
	80/4" no rec.	
REFUSAL AT 123.3' WATER AT 27.0' @ end of hole 4.0' to water from bench mark		
DATE: 5/14-15/87 DRILLER: MOODIE		

BORING NO.
LINE & STA.
OFFSET
GR. ELEV.

A STRATUM DESCRIPTION	BLOWS PER	B

1. COL. A strata depth
2. COL. B
3. HAMMER = 140#; FALL 30"

Trio Printers # 1127

AND - 40 to 50%

REVISION	DATE	CITY	DESCRIPTION

REVISIONS

City of New London — Connecticut

CITY OF NEW LONDON

SUBMITTED BY: MMI DATE: 10/18/10
APPROVED BY: DATE:
CADD - FILENAME: CP-Details.dwg

DRAWING TITLE:
BORING LOGS
CITY PIER REHABILITATION

PROJECT NO.: 2389-21
DRAWING NO.: BOR-1
SHEET NO.: 11

CLARENCE WELTI ASSOC., INC.
P.O. BOX 397
GLASTONBURY, CONN. 06033

"BORING LOG"

PROJ. New London, CT
CLIENT CITY OF NEW LONDON

BORING NO. 3 (1987)
LINE & STA.
OFFSET
GR. ELEV.

BORING NO.
LINE & STA.
OFFSET
GR. ELEV.

A	STRATUM DESCRIPTION	BLOWS PER ..6"	B
	WATER		
14.0			
	blk.organic silt, tr.stone & shells		
20.0		1/24"	
	gr.organic silt, tr.blk.organic silt & shells		
		1/24"	
		1/24"	
		1/24"	
36.0	gr.organic silt		
		1-0-1-1	
45.0		1-1-1-2	

A	STRATUM DESCRIPTION	BLOWS PER..	B
	Pressed 2" TUBE 48.0'-50.0' rec.19"	tube	
	gr.organic silt	1-0-1-1	
60.0		1-1-0-1	
	gr.organic silt, tr.wood & stone		
		1-0-1-1	
		2-2-3-4	
		1-2-2-4	
76.0		no rec.	
	gr/br.fine-crs.sand, some gravel & cobbles		
		22-31-46-37	
82.5			
	ROLLER BIT REFUSAL @ 82.5'		

DATE: 5/15-18/87
DRILLER: MOODIE

1. COL. A strata depth
2. COL. B
3. HAMMER - 140#; FALL 30"

AND - 40 to 50%

Trip Punches #1127

CLARENCE WELTI ASSOC., INC.
P.O. BOX 397
GLASTONBURY, CONN 06033

CLIENT SASAKI ASSOCIATES

PROJECT NAME WATERFRONT REVITALIZATION
LOCATION NEW LONDON, CT (1999)

	AUGER	CASING	SAMPLER	CORE BAR.	OFFSET
TYPE		2-JW	SS	BX	LINE & STA.
SIZE I.D.		3.0"	1.5"	1.6"	
HAMMER WT.			140lbs		N. COORDINATE
HAMMER FALL			30"		E. COORDINATE

SURFACE ELEV. 0.0 | HOLE NO. B-1
GROUND WATER OBSERVATIONS
AT FT. AFTER HOURS | START DATE 1/19/99
AT FT. AFTER HOURS | FINISH DATE 1/20/99

DEPTH	SAMPLE NO.	BLOWS/6"	DEPTH	A	STRATUM DESCRIPTION + REMARKS	ELEV.
0					WATER	0
5						-5
10						-10
15					Grey organic SILT	-15.0 -15
20						-20
25	1	WOH	25.00'-26.50'			-25
30						-30
35						-35

LEGEND: COL. A:
SAMPLE TYPE: D=DRY A=AUGER C=CORE U=UNDISTURBED PISTON S=SPLIT SPOON
PROPORTIONS USED: TRACE=0-10% LITTLE=10-20% SOME=20-35% AND=35-50%

DRILLER: BROMLEY
INSPECTOR:
SHEET 1 OF 2 | HOLE NO. B-1

CLARENCE WELTI ASSOC., INC.
P.O. BOX 397
GLASTONBURY, CONN 06033

CLIENT SASAKI ASSOCIATES

PROJECT NAME WATERFRONT REVITALIZATION
LOCATION NEW LONDON, CT

DEPTH	SAMPLE NO.	BLOWS/6"	DEPTH	A	STRATUM DESCRIPTION + REMARKS	ELEV.
35	2	WOH	35.00'-36.50'			-35
40						-40
45	3	WOH	45.00'-46.50'			-45
50						-50
55	4	WOH	55.00'-56.50'			-55
60						-60
65	5	4-9-23	65.00'-66.50'		Grey fine-coarse SAND and fine GRAVEL, trace Silt	-64.0 -65
70					Cored Rock - GRANITE RUN #1 69.0' - 74.0' recovered 54" RQD = 82%	-69.0 -70
75					BOTTOM OF BORING @ 74.0'	-74.0 -75

LEGEND: COL. A:
SAMPLE TYPE: D=DRY A=AUGER C=CORE U=UNDISTURBED PISTON S=SPLIT SPOON
PROPORTIONS USED: TRACE=0-10% LITTLE=10-20% SOME=20-35% AND=35-50%

DRILLER: BROMLEY
INSPECTOR:
SHEET 2 OF 2 | HOLE NO. B-1

CLARENCE WELTI ASSOC., INC.
P.O. BOX 397
GLASTONBURY, CONN 06033

CLIENT SASAKI ASSOCIATES

PROJECT NAME WATERFRONT REVITALIZATION
LOCATION NEW LONDON, CT (1999)

	AUGER	CASING	SAMPLER	CORE BAR.	OFFSET
TYPE		HJC	SS	NX	LINE & STA.
SIZE I.D.		4.0"	1.5"	2.0"	
HAMMER WT.			140lbs		N. COORDINATE
HAMMER FALL			30"		E. COORDINATE

SURFACE ELEV. 6.4 | HOLE NO. B-2
GROUND WATER OBSERVATIONS
AT 5.5 FT. AFTER 0 HOURS | START DATE 1/6/99
AT FT. AFTER HOURS | FINISH DATE 1/7/99

DEPTH	SAMPLE NO.	BLOWS/6"	DEPTH	A	STRATUM DESCRIPTION + REMARKS	ELEV.
0					Black fine-coarse SAND and fine GRAVEL, trace Silt Grey fine-coarse SAND and fine GRAVEL, trace Silt - FILL Black fine-coarse SAND and fine GRAVEL, some Glass, Brick Fragments & Shells - FILL	3 1.0 -5
5	1	3-5-4	5.00'-6.50'			0
10	2	2-1-1	10.00'-11.50'		Grey fine SAND and Organic SILT	-10.0 -5
15						-10
20	3	1-0-0	20.00'-21.50'			-15
25						-20
30	4	1-0-1	30.00'-31.50'			-25
35						

LEGEND: COL. A:
SAMPLE TYPE: D=DRY A=AUGER C=CORE U=UNDISTURBED PISTON S=SPLIT SPOON
PROPORTIONS USED: TRACE=0-10% LITTLE=10-20% SOME=20-35% AND=35-50%

DRILLER: BROMLEY
INSPECTOR:
SHEET 1 OF 2 | HOLE NO. B-2

CLARENCE WELTI ASSOC., INC.
P.O. BOX 397
GLASTONBURY, CONN 06033

CLIENT SASAKI ASSOCIATES

PROJECT NAME WATERFRONT REVITALIZATION
LOCATION NEW LONDON, CT

DEPTH	SAMPLE NO.	BLOWS/6"	DEPTH	A	STRATUM DESCRIPTION + REMARKS	ELEV.
35						-30
					Gray fine SAND, little Silt	-39.0
40					Cored Rock - Gray GRANITE RUN #1 40.0' - 45.0' - recovered 60" RQD = 67%	-40.0 -35
45					BOTTOM OF BORING @ 45.0'	-45.0 -40
50						-45
55						-50
60						-55
65						-60
70						-65
75						

LEGEND: COL. A:
SAMPLE TYPE: D=DRY A=AUGER C=CORE U=UNDISTURBED PISTON S=SPLIT SPOON
PROPORTIONS USED: TRACE=0-10% LITTLE=10-20% SOME=20-35% AND=35-50%

DRILLER: BROMLEY
INSPECTOR:
SHEET 2 OF 2 | HOLE NO. B-2

CLARENCE WELTI ASSOC., INC.
P.O. BOX 397
GLASTONBURY, CONN 06033

CLIENT SASAKI ASSOCIATES

PROJECT NAME WATERFRONT REVITALIZATION
LOCATION NEW LONDON, CT (1999)

	AUGER	CASING	SAMPLER	CORE BAR.	OFFSET
TYPE		2-JW	SS		LINE & STA.
SIZE I.D.		4.0"	1.5"		
HAMMER WT.			140lbs		N. COORDINATE
HAMMER FALL			30"		E. COORDINATE

SURFACE ELEV. +1.0 | HOLE NO. B-3
GROUND WATER OBSERVATIONS
AT FT. AFTER HOURS | START DATE 1/14/99
AT FT. AFTER HOURS | FINISH DATE 1/8/99

DEPTH	SAMPLE NO.	BLOWS/6"	DEPTH	A	STRATUM DESCRIPTION + REMARKS	ELEV.
0					ASPHALT CONCRETE Brown fine-coarse SAND and fine GRAVEL, trace Silt	1 0 -5
5	1	2-2-2	5.00'-6.50'			-0
10	2	2-1-1	10.00'-11.50'		Grey fine-coarse SAND and fine GRAVEL, trace Silt	-10.0 -5
15	3	1-1-1	15.00'-16.50'			-10
					Grey fine-coarse SAND and fine GRAVEL, trace Silt (organic odor)	-18.0
20	4	16-14-15	20.00'-21.50'			-15
					Grey fine SAND, little Silt (organic odor)	-22.0
25	5	3-3-2	25.00'-26.50'		Grey fine-coarse SAND and fine-medium GRAVEL, trace Silt	-25.0 -20
30	6	7-7-7	30.00'-31.50'			-25
35						

LEGEND: COL. A:
SAMPLE TYPE: D=DRY A=AUGER C=CORE U=UNDISTURBED PISTON S=SPLIT SPOON
PROPORTIONS USED: TRACE=0-10% LITTLE=10-20% SOME=20-35% AND=35-50%

DRILLER: BROMLEY
INSPECTOR:
SHEET 1 OF 2 | HOLE NO. B-3

CLARENCE WELTI ASSOC., INC.
P.O. BOX 397
GLASTONBURY, CONN 06033

CLIENT SASAKI ASSOCIATES

PROJECT NAME WATERFRONT REVITALIZATION
LOCATION NEW LONDON, CT

DEPTH	SAMPLE NO.	BLOWS/6"	DEPTH	A	STRATUM DESCRIPTION + REMARKS	ELEV.
35	7	13-14-12	35.00'-35.50'			-30
40	8	3-4-5	40.00'-41.50'			-35
45	9	6-5-5	45.00'-46.50'		Grey SILT and fine SAND	-45.0 -40
50	10	4-6-7	50.00'-51.50'			-45
55	11	14-18-19	55.00'-56.50'		top of Sand	-50
60	12	14-18-18	60.00'-61.50'			-55
65					Cored Rock - Grey GRANITE RUN #1 63.0' - 68.0' recovered 50" RQD = 82%	-63.0 -60
70					BOTTOM OF BORING @ 68.0'	-68.0 -65
75						

LEGEND: COL. A:
SAMPLE TYPE: D=DRY A=AUGER C=CORE U=UNDISTURBED PISTON S=SPLIT SPOON
PROPORTIONS USED: TRACE=0-10% LITTLE=10-20% SOME=20-35% AND=35-50%

DRILLER: BROMLEY
INSPECTOR:
SHEET 2 OF 2 | HOLE NO. B-3

CLARENCE WELTI ASSOC., INC.
P.O. BOX 397
GLASTONBURY, CONN 06033

CLIENT SASAKI ASSOCIATES

PROJECT NAME WATERFRONT REVITALIZATION
LOCATION NEW LONDON, CT

	AUGER	CASING	SAMPLER	CORE BAR.	OFFSET
TYPE		2-JW	SS		LINE & STA.
SIZE I.D.		4.0"	1.5"		
HAMMER WT.			140lbs		N. COORDINATE
HAMMER FALL			30"		E. COORDINATE

SURFACE ELEV. +1.0 | HOLE NO. B-4
GROUND WATER OBSERVATIONS
AT FT. AFTER HOURS | START DATE 1/8/99
AT FT. AFTER HOURS | FINISH DATE 1/11/99

DEPTH	SAMPLE NO.	BLOWS/6"	DEPTH	A	STRATUM DESCRIPTION + REMARKS	ELEV.
0					WATER	0
5						-5
10						-10
15					Grey organic SILT, and fine SAND	-16.0 -15
20						-20
25						-25
30	1	WOH	30.00'-31.50'			-30
35						

LEGEND: COL. A:
SAMPLE TYPE: D=DRY A=AUGER C=CORE U=UNDISTURBED PISTON S=SPLIT SPOON
PROPORTIONS USED: TRACE=0-10% LITTLE=10-20% SOME=20-35% AND=35-50%

DRILLER: BROMLEY
INSPECTOR:
SHEET 1 OF 2 | HOLE NO. B-4

CLARENCE WELTI ASSOC., INC.
P.O. BOX 397
GLASTONBURY, CONN 06033

CLIENT SASAKI ASSOCIATES

PROJECT NAME WATERFRONT REVITALIZATION
LOCATION NEW LONDON, CT

DEPTH	SAMPLE NO.	BLOWS/6"	DEPTH	A	STRATUM DESCRIPTION + REMARKS	ELEV.
35						-35
40	3	1-1-1	40.00'-41.50'			-40
45					Grey fine-medium SAND, trace Silt	-47.0 -45
50	4	26-32-21	50.00'-51.50'			-50
55	5	25-24-22	55.00'-56.50'			-55
60	6	8-10-20	60.00'-61.50'		Grey SILT and fine SAND, trace Clay	-60.0 -60
65	7	48-26-14	65.00'-66.50'		Grey fine-coarse SAND and fine GRAVEL, trace Silt	-65.0 -65
	8	50	66.50'-66.75'		Grey WEATHERED ROCK BOTTOM OF BORING @ 68.8' ROLLER BIT REFUSAL @ 66.8'1	-66.8
70						-70
75						

LEGEND: COL. A:
SAMPLE TYPE: D=DRY A=AUGER C=CORE U=UNDISTURBED PISTON S=SPLIT SPOON
PROPORTIONS USED: TRACE=0-10% LITTLE=10-20% SOME=20-35% AND=35-50%

DRILLER: BROMLEY
INSPECTOR:
SHEET 2 OF 2 | HOLE NO. B-4

REVISION	DATE	CITY	DESCRIPTION

REVISIONS

City of New London
Connecticut

CITY OF NEW LONDON

SUBMITTED BY: MMI | DATE: 10/18/10
APPROVED BY: | DATE:
CADD - FILENAME: CP-Details.dwg

DRAWING TITLE:
BORING LOGS

CITY PIER REHABILITATION

PROJECT NO.: 2389-21
DRAWING NO.: BOR-2
SHEET NO.: 12

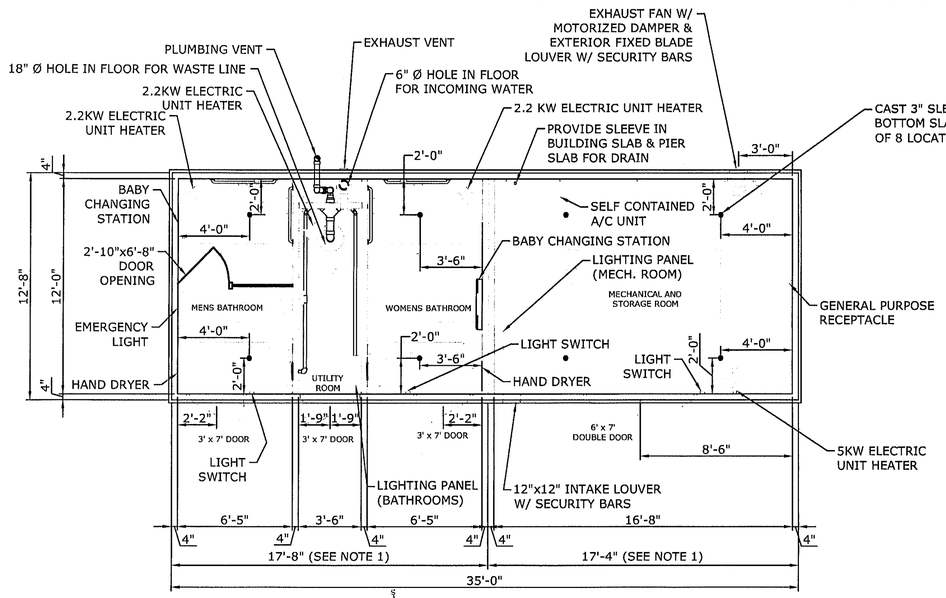

PLAN VIEW

SCALE: ¼"=1'-0"

NOTE:

1. TWO SEPARATE BUILDINGS DELIVERED TO SITE AND PLACED TOGETHER @ LOCATION W/ ONE ROOF SYSTEM.
2. SEE LAYOUT PLAN FOR BUILDING LOCATION.
3. TOILETS TO BE MANUAL FLUSH SYSTEM.

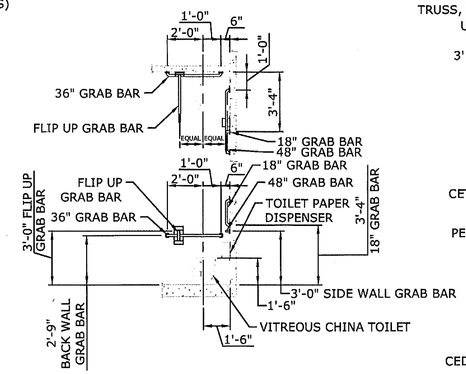

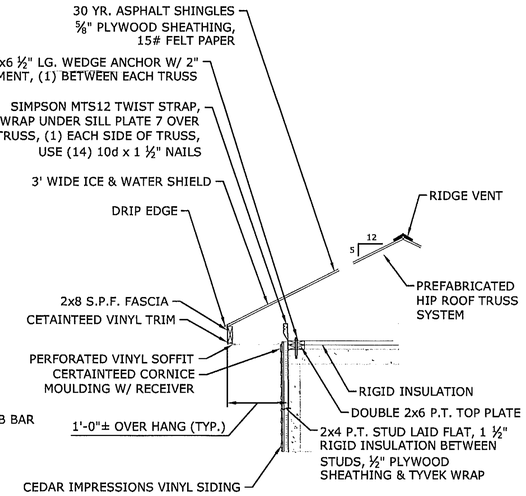

TYPICAL WALL SECTION W/ ROOF SYSTEM

NOT TO SCALE

GENERAL NOTES:

1. CONCRETE COMPRESSIVE STRENGTH: 5,000 PSI @ 28 DAYS.
2. STRUCTURE SHALL BE WET CAST USING LIGHTWEIGHT CONCRETE MIX.
3. REINFORCING STEEL DEFORMED BARS CONFORM TO LATEST ASTM SPECIFICATION A615, GRADE 60, 1 ½" MINIMUM COVER.
4. THE BUILDING SHALL BE LIFTED FROM THE BASE SLAB WITH UNITED CONCRETE OR APPROVED EQUAL PROVIDED LIFTING HARDWARE.
5. THE SUPPORTING BASE FOR THE BUILDING IS THE RESPONSIBILITY OF THE CONTRACTOR.
6. THE CONTRACTOR SHALL COORDINATE AND VERIFY ALL SIZES AND LOCATIONS FOR PENETRATIONS SHOWN ON THIS DRAWING.

FINISH SCHEDULE		
AREA	COATING TYPE	COLOR
BUILDING INTERIOR WALLS & CEILING	SHERWIN WILLIAMS MACROPOXY 646	PER OWNER'S SPECIFICATIONS
BUILDING INTERIOR FLOOR	NO COATINGS	NATURAL CONCRETE
BUILDING EXTERIOR WALLS	CERTAINTEED CEDAR IMPRESSIONS VINYL SIDING OR APPROVED EQUAL	STERLING GRAY
BUILDING EXTERIOR SOFFIT, FASCIA & TRIM	CERTAINTEED CEDAR IMPRESSIONS VINYL SIDING OR APPROVED EQUAL	COLONIAL WHITE
DOORS & FRAMES	(2) COATS OF SHERWIN WILLIAMS SHER-CRYL HPA OR APPROVED EQUAL	PER OWNER'S SPECIFICATIONS
LOUVERS	MILL FINISH	N/A

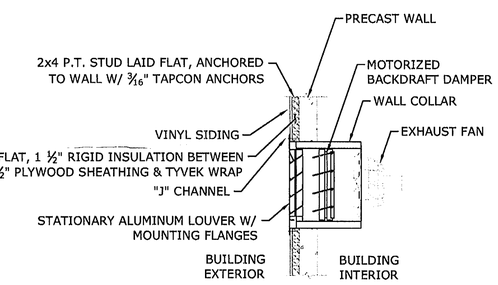

EXHAUST FAN W/ FIXED LOUVER & MOTORIZED DAMPER

NOT TO SCALE

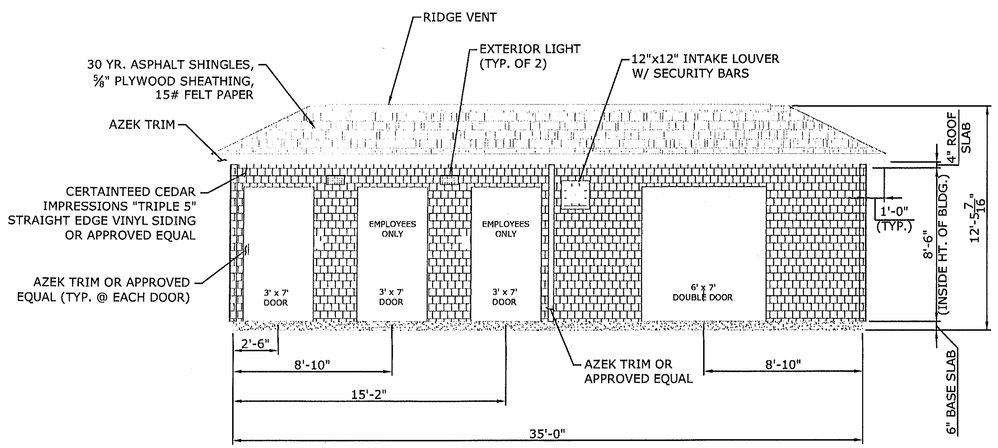

FRONT ELEVATION

SCALE: ¼"=1'-0"

NOTE:

1. PRECAST CONCRETE UTILITY & BATHROOM BUILDING COMPLETE AS SHOWN SHALL BE MANUFACTURED BY UNITED CONCRETE OR APPROVED EQUAL AND TO BE PAID FOR UNDER ITEM "PRECAST CONCRETE UTILITY & BATHROOM BUILDING".
2. PREFABRICATOR MANUFACTURER TO PROVIDE KNOCK-OUTS @ LOCATIONS SHOWN ON UTILITY PLAN.
3. PROVIDE SHOP DRAWINGS FOR APPROVAL.

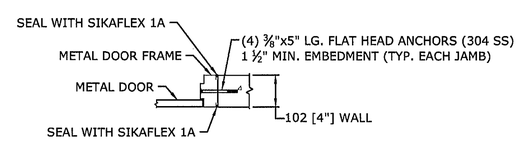

DOOR JAMB SECTION

NOT TO SCALE

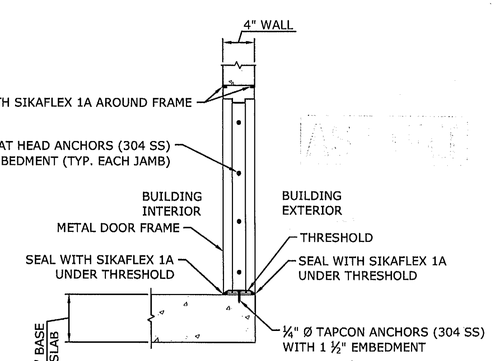

TYPICAL DOOR JAMB DETAIL

NOT TO SCALE

REVISION	DATE	CITY	DESCRIPTION
REVISIONS			

City of New London Connecticut

CITY OF NEW LONDON

SUBMITTED BY: MMI DATE: 10/18/10

APPROVED BY: DATE:

CADD - FILENAME: CP-Details.dwg

DRAWING TITLE: PRECAST CONCRETE UTILITY & BATHROOM BUILDING PLAN CITY PIER REHABILITATION

PROJECT NO.: 2389-21

DRAWING NO.: A-1

SHEET NO.: 13

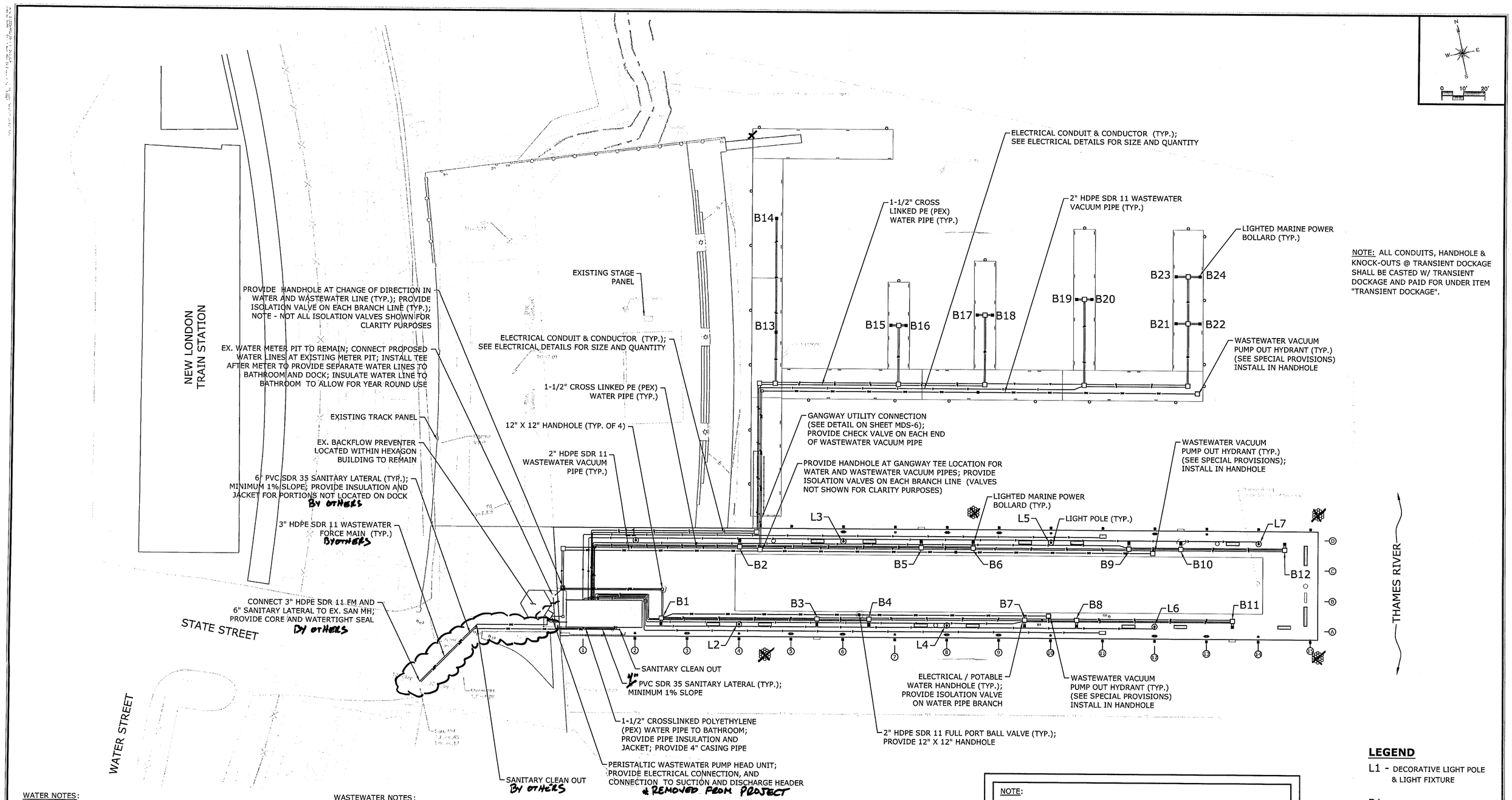

NOTE: ALL CONDUITS, HANDHOLE & KNOCK-OUTS @ TRANSIENT DOCKAGE SHALL BE CASTED W/ TRANSIENT DOCKAGE AND PAID FOR UNDER ITEM "TRANSIENT DOCKAGE".

LEGEND

L1 - DECORATIVE LIGHT POLE & LIGHT FIXTURE

B1 - LIGHTED MARINE POWER BOLLARD

WATER NOTES:

1. ALL COMPONENTS OF POTABLE WATER SYSTEM TO BE NSF 61 COMPLIANT.
2. PROVIDE ALL BENDS AND FITTINGS NECESSARY TO CONSTRUCT LAYOUT AS SHOW ON PLANS.
3. REMOVE AND PROPERLY DISPOSE OF ALL EXISTING PIPING WITHIN METER PIT. PROVIDE ONE (1) CONVENIENCE HOSE BIB IN METER PIT FOLLOWING REASSEMBLY.
4. PROVIDE 1-1/2" BALL VALVE AT ALL TEE BRANCH CONNECTIONS TO POTABLE WATER / ELECTRIC BOLLARD UNITS.
5. PROVIDE HANDHOLE AT CHANGE OF DIRECTION IN WATER LINE. PROVIDE ISOLATION VALVE ON EACH BRANCH LINE. NOTE - NOT ALL ISOLATION VALVES SHOWN FOR CLARITY PURPOSES.
6. WATER LINE BRANCH TO BATHROOM TO BE INSULATED TO ALLOW FOR YEAR ROUND USE OF BATHROOM FACILITY. PROVIDE MINIMUM 1" THICK CLOSED CELL FOAM PLASTIC INSULATION. PROVIDE 4" CASING PIPE.

WASTEWATER NOTES:

1. PROVIDE ALL BENDS AND FITTINGS NECESSARY TO CONSTRUCT LAYOUT AS SHOW ON PLANS.
2. PROVIDE ISOLATION BALL VALVE EVERY 100 LINEAR FEET OF WASTEWATER VACUUM PIPE AND AT EACH BRANCH LINE LOCATION. PROVIDE HANDHOLE AT ISOLATION BALL VALVE LOCATIONS.
3. PROVIDE HANDHOLE AT CHANGE OF DIRECTION IN WASTEWATER LINE. PROVIDE ISOLATION VALVE ON EACH BRANCH LINE. NOTE - NOT ALL ISOLATION VALVES SHOWN FOR CLARITY PURPOSES
4. PROVIDE MINIMUM 1% SLOPE IN 6" LATERAL FROM PROPOSED BUILDING BATHROOMS TO EXISTING MANHOLE. INSULATE AND JACKET PORTION OF 6" LATERAL THAT IS NOT LOCATED ON DOCK. PROVIDE MINIMUM 2" THICK POLYURETHANE FOAM INSULATION.

NOTE:

UNLESS OTHERWISE NOTED, WATER AND WASTEWATER CARRIER PIPING IDENTIFIED ON UTILITY LAYOUT PLAN IS TO BE INSTALLED WITHIN 3" PVC CASING PIPE. CASING PIPE TO BE INSTALLED AS PART OF FIXED PIER AND FLOATING DOCK CONCRETE STRUCTURES PER UTILITY SECTION DRAWINGS.

REVISION	DATE	CITY	DESCRIPTION

REVISIONS

City of New London Connecticut

CITY OF NEW LONDON

SUBMITTED BY: MMI DATE: 10/18/10

APPROVED BY: DATE:

CADD - FILENAME: CP-Utility.dwg

DRAWING TITLE: UTILITY LAYOUT PLAN

CITY PIER REHABILITATION

PROJECT NO.: 2389-21

DRAWING NO.: UT-1

SHEET NO.: 14

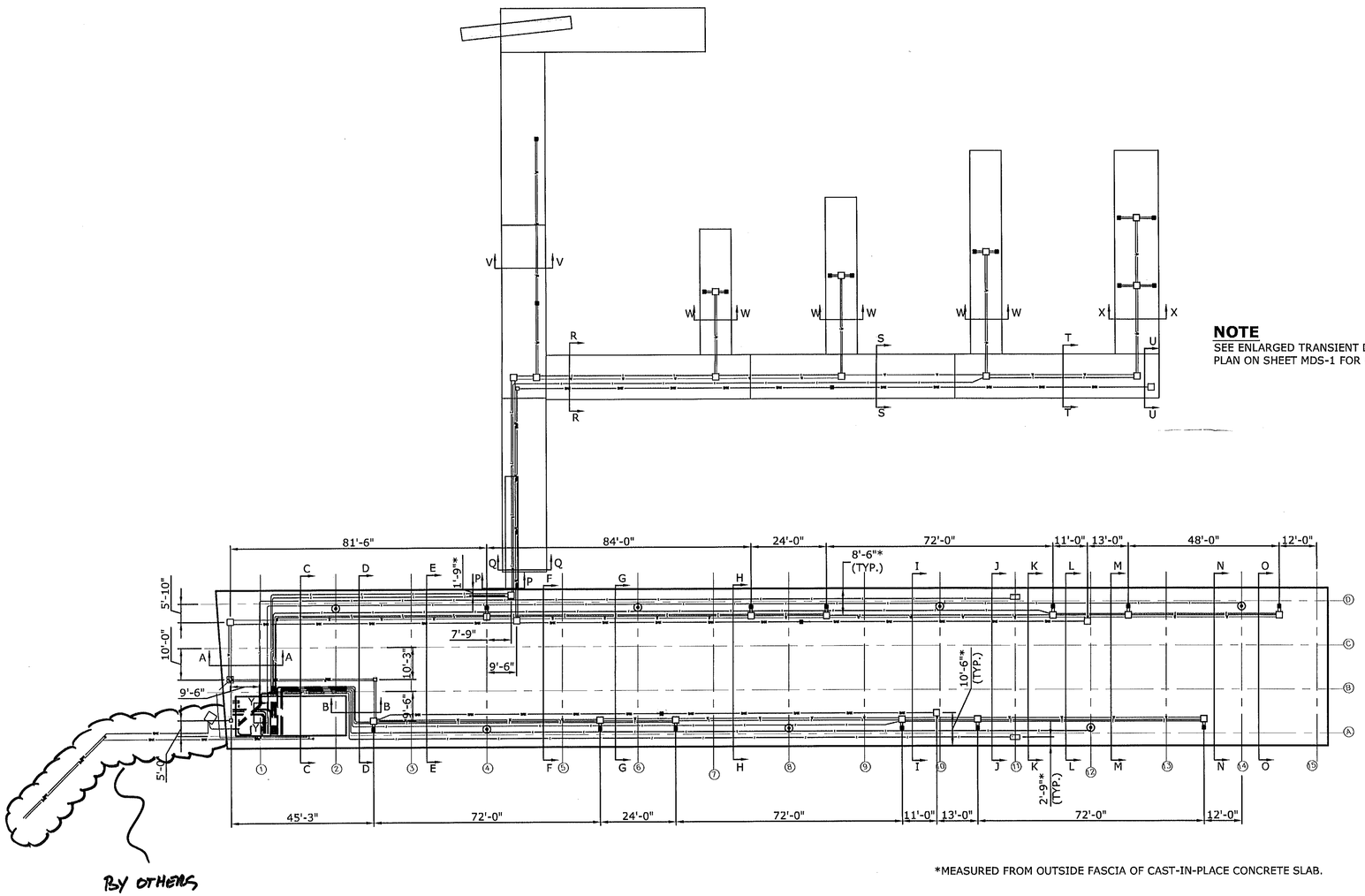

NOTE
SEE ENLARGED TRANSIENT DOCKAGE PLAN ON SHEET MDS-1 FOR DIMENSIONS.

*MEASURED FROM OUTSIDE FASCIA OF CAST-IN-PLACE CONCRETE SLAB.

REVISION	DATE	CITY	DESCRIPTION

REVISIONS

City of New London
Connecticut

CITY OF NEW LONDON

SUBMITTED BY: DATE:
APPROVED BY: DATE:
CADD - FILENAME: CP-UtilitySections.dwg

DRAWING TITLE:
UTILITY LAYOUT PLAN

CITY PIER REHABILITATION

PROJECT NO.: 2389-21
DRAWING NO.: UT-2
SHEET NO.: 15

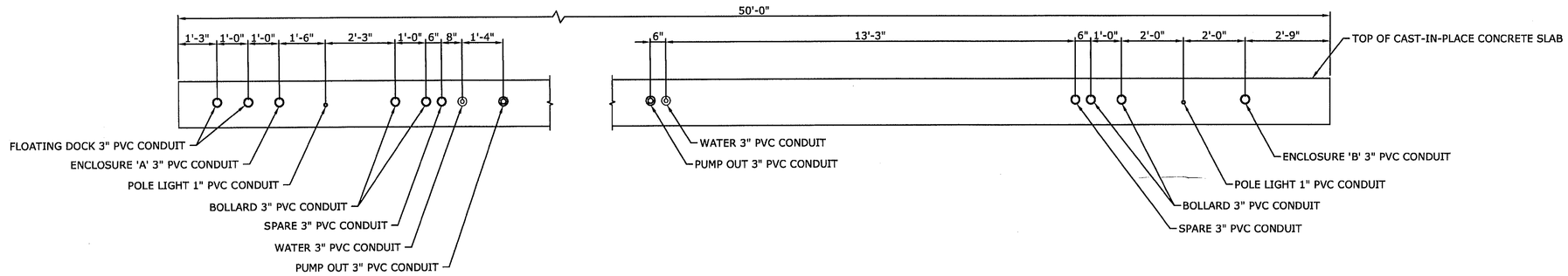

SECTION D-D
CONCRETE PIER

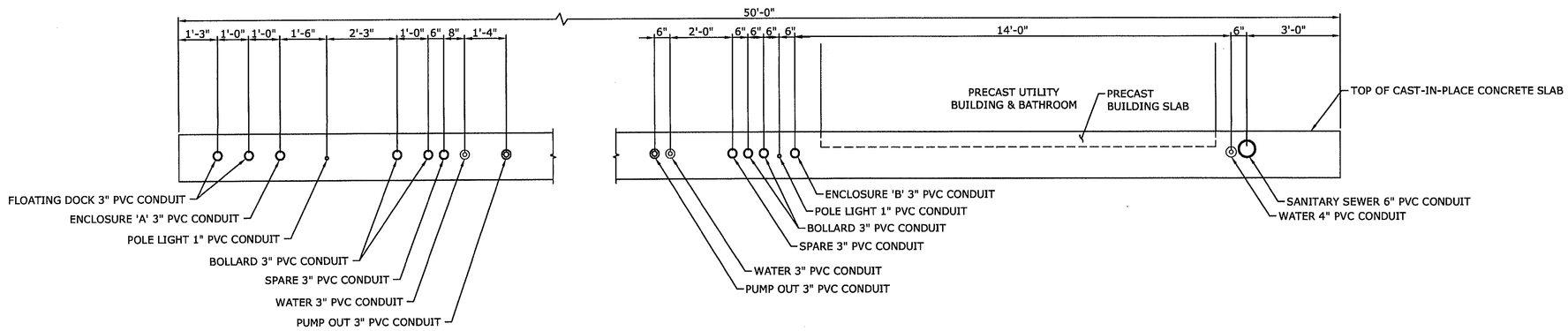

SECTION C-C
CONCRETE PIER

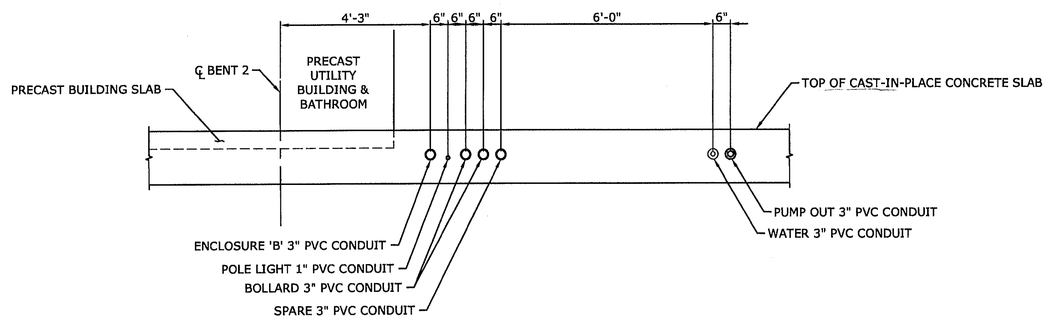

SECTION B-B
CONCRETE PIER

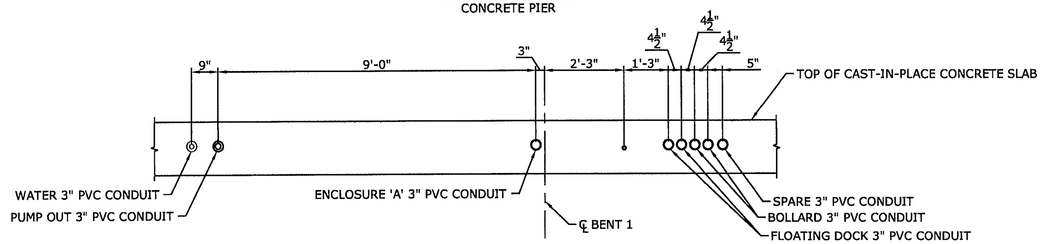

SECTION A-A
CONCRETE PIER

NOTES
1. CAST-IN-PLACE CONCRETE SLAB REINFORCING NOT SHOWN FOR CLARITY.
2. ALL CONDUITS SHALL BE SECURED PRIOR TO POURING CONCRETE.
3. THE COST OF INSTALLING & FURNISHING CONDUITS SHALL BE INCLUDED IN THE ITEM "CLASS "F" CONCRETE".
4. SEE SLAB PLAN FOR DEPTH OF CAST-IN-PLACE CONCRETE SLAB.

SCALE: ½"=1'-0"
0 6" 1'-0"

REVISION	DATE	CITY	DESCRIPTION

REVISIONS

City of New London
Connecticut

CITY OF NEW LONDON

SUBMITTED BY: DATE:
APPROVED BY: DATE:
CADD - FILENAME: CP-UtilitySections.dwg

DRAWING TITLE:
UTILITY CROSS SECTIONS

CITY PIER REHABILITATION

PROJECT NO.: 2389-21
DRAWING NO.: UTS-1
SHEET NO.: 16

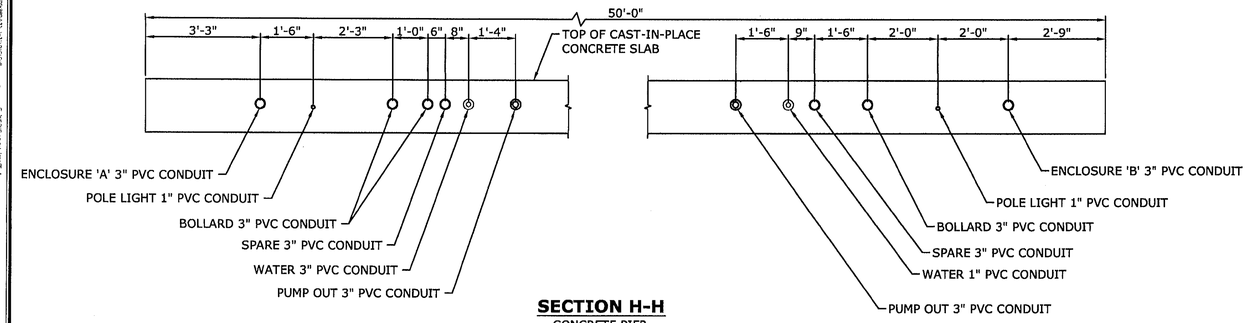

SECTION H-H
CONCRETE PIER

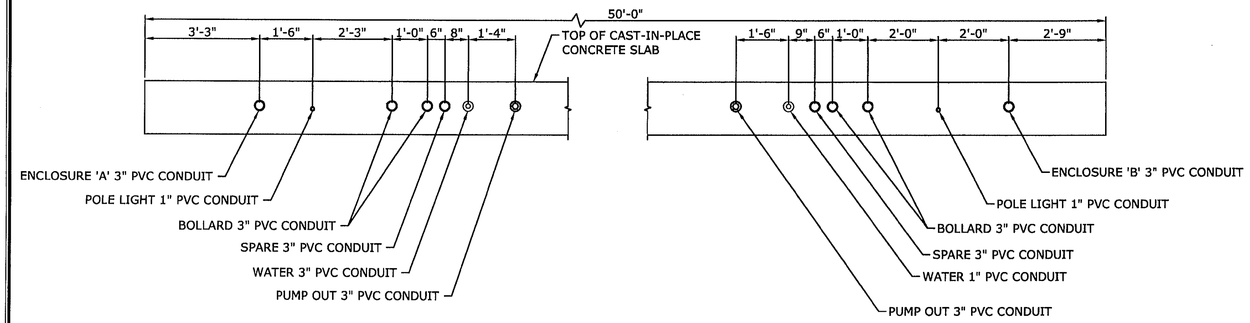

SECTION G-G
CONCRETE PIER

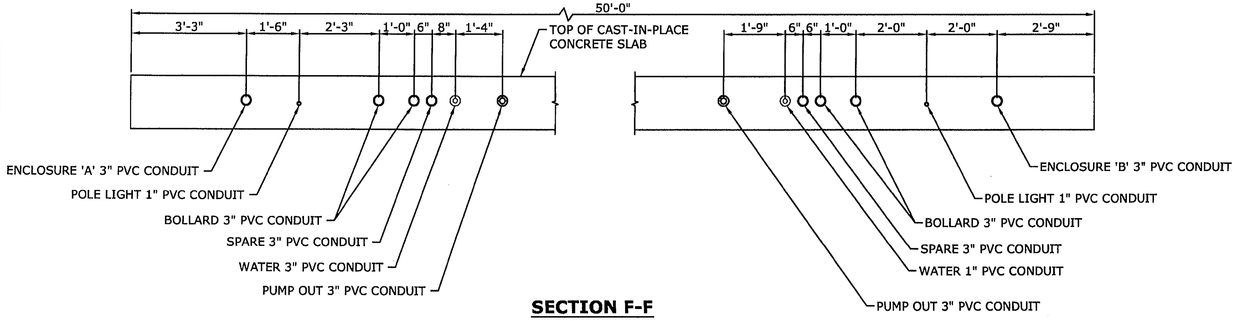

SECTION F-F
CONCRETE PIER

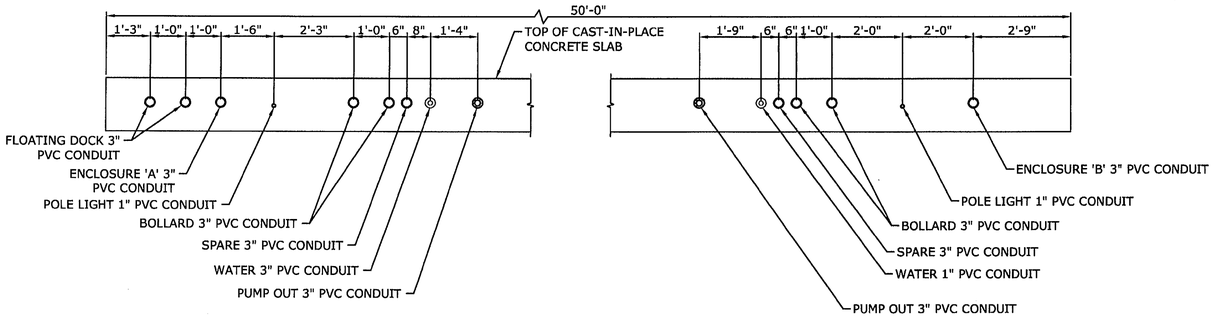

SECTION E-E
CONCRETE PIER

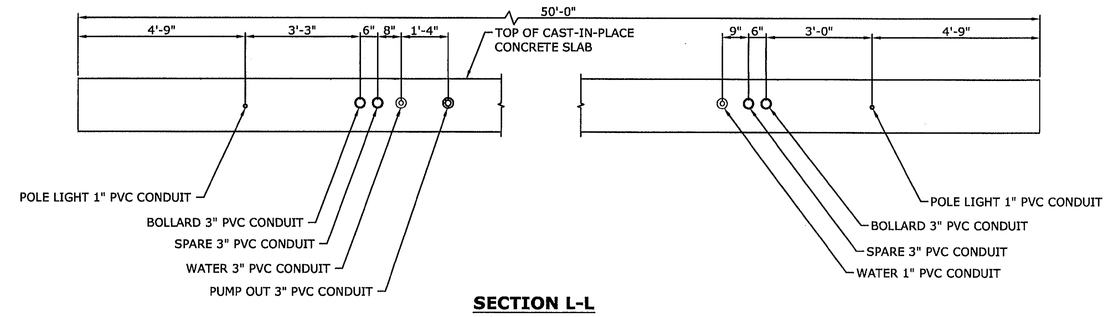

SECTION L-L
CONCRETE PIER

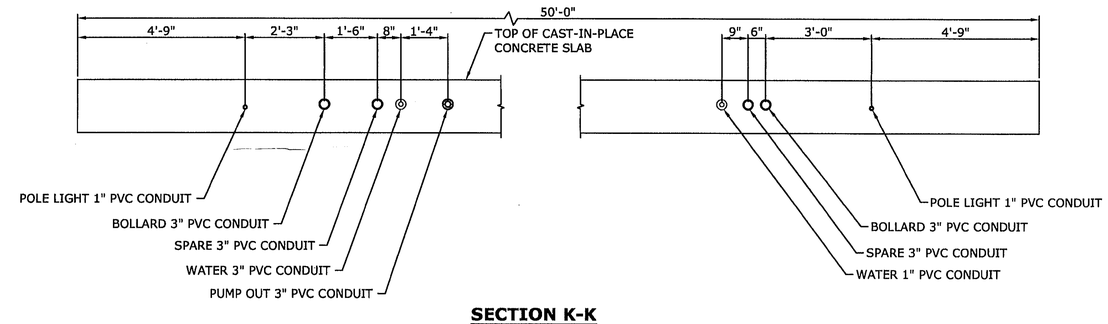

SECTION K-K
CONCRETE PIER

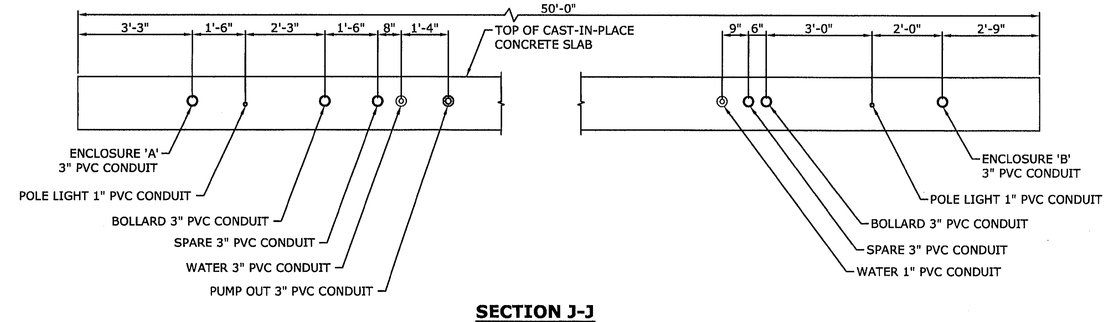

SECTION J-J
CONCRETE PIER

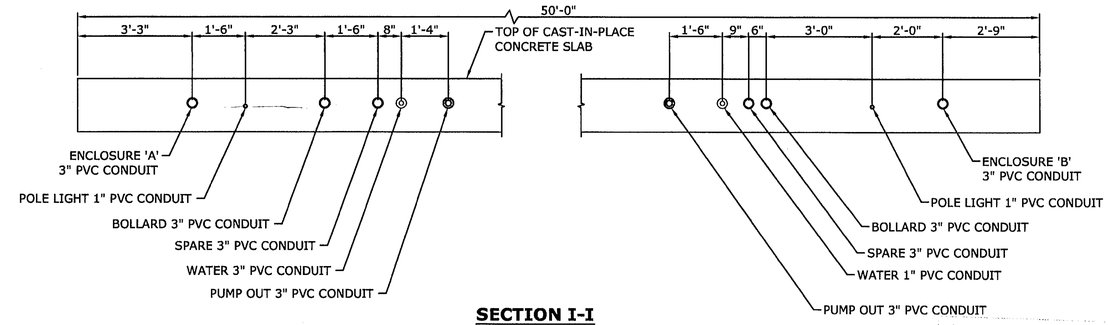

SECTION I-I
CONCRETE PIER

NOTES

1. CAST-IN-PLACE CONCRETE SLAB REINFORCING NOT SHOWN FOR CLARITY.
2. ALL CONDUITS SHALL BE SECURED PRIOR TO POURING CONCRETE.
3. THE COST OF INSTALLING & FURNISHING CONDUITS SHALL BE INCLUDED IN THE ITEM "CLASS "F" CONCRETE".
4. SEE SLAB PLAN FOR DEPTH OF CAST-IN-PLACE CONCRETE SLAB.

SCALE: ½"=1'-0"
0 6" 1'-0"

REVISION	DATE	CITY	DESCRIPTION

REVISIONS

City of New London Connecticut

CITY OF NEW LONDON

SUBMITTED BY: DATE:
APPROVED BY: DATE:
CADD - FILENAME: CP-UtilitySections.dwg

DRAWING TITLE:
UTILITY CROSS SECTIONS
CITY PIER REHABILITATION

PROJECT NO.: 2389-21
DRAWING NO.: UTS-2
SHEET NO.: 17

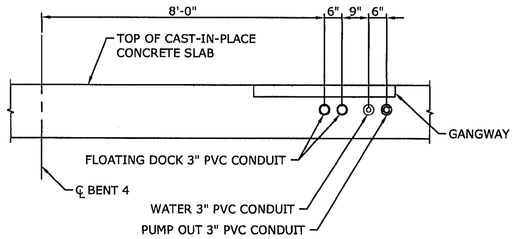

SECTION P-P
CONCRETE PIER

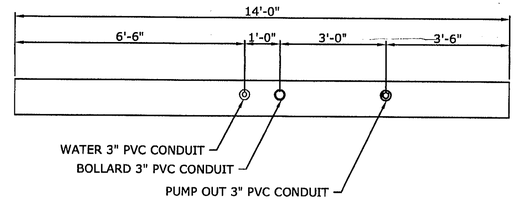

SECTION T-T
TRANSIENT DOCKAGE

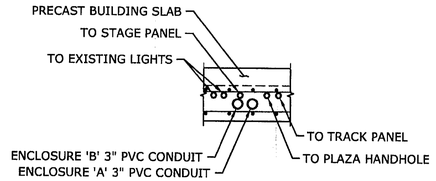

SECTION Y-Y
CONCRETE PIER

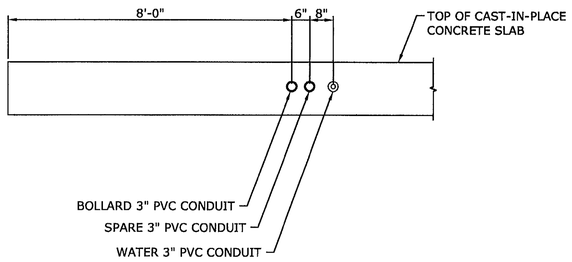

SECTION O-O
CONCRETE PIER

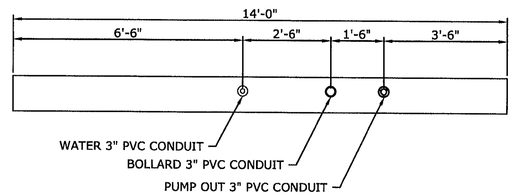

SECTION S-S
TRANSIENT DOCKAGE

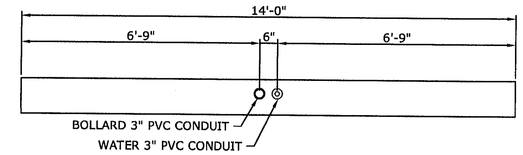

SECTION X-X
TRANSIENT DOCKAGE

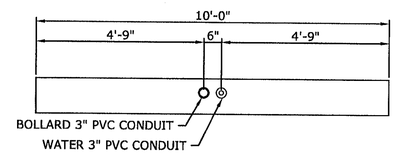

SECTION W-W
TRANSIENT DOCKAGE

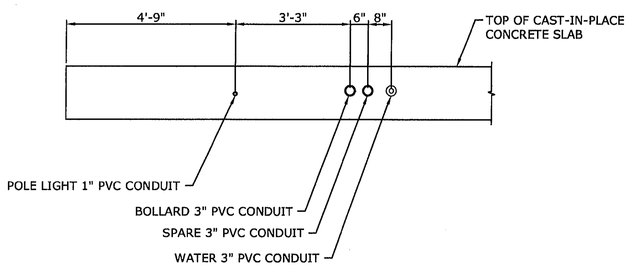

SECTION N-N
CONCRETE PIER

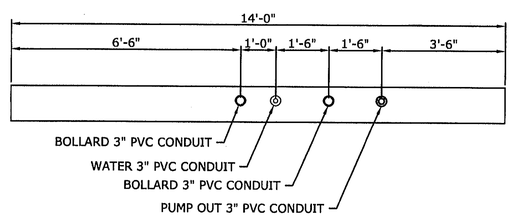

SECTION R-R
TRANSIENT DOCKAGE

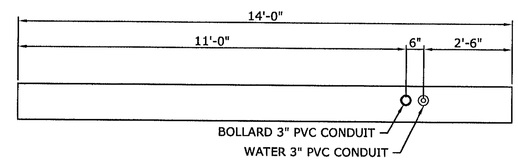

SECTION V-V
TRANSIENT DOCKAGE

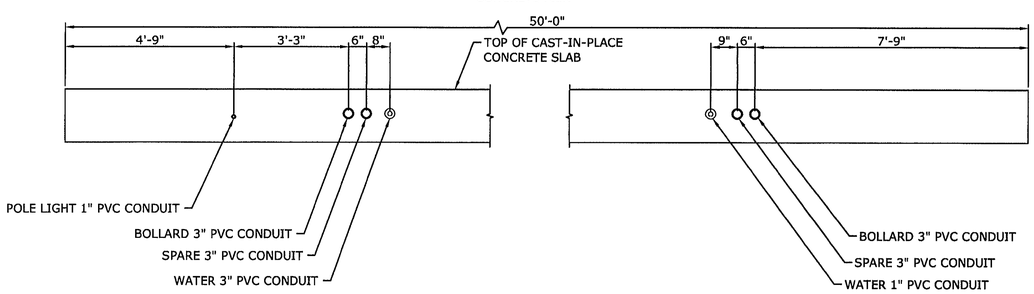

SECTION M-M
CONCRETE PIER

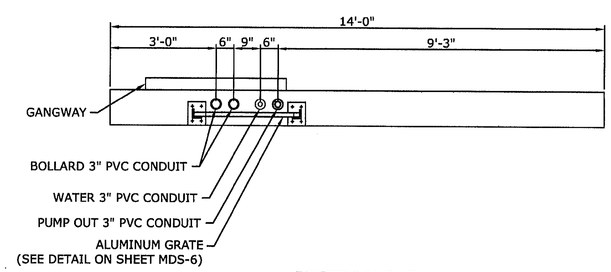

SECTION Q-Q
TRANSIENT DOCKAGE

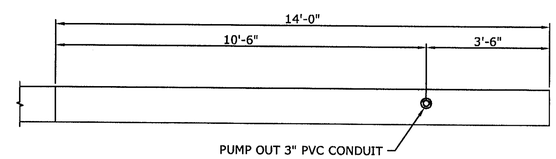

SECTION U-U
TRANSIENT DOCKAGE

NOTES

1. CAST-IN-PLACE CONCRETE SLAB REINFORCING NOT SHOWN FOR CLARITY.
2. ALL CONDUITS SHALL BE SECURED PRIOR TO POURING CONCRETE.
3. THE COST OF INSTALLING & FURNISHING CONDUITS SHALL BE INCLUDED IN THE ITEM "CLASS "F" CONCRETE".
4. SEE SLAB PLAN FOR DEPTH OF CAST-IN-PLACE CONCRETE SLAB.

SCALE: ½"=1'-0"
0 6" 1'-0"

REVISION	DATE	CITY	DESCRIPTION

REVISIONS

City of New London
Connecticut

CITY OF NEW LONDON

SUBMITTED BY: DATE:
APPROVED BY: DATE:
CADD - FILENAME: CP-UtilitySections.dwg

DRAWING TITLE:
UTILITY CROSS SECTIONS

CITY PIER REHABILITATION

PROJECT NO.: 2389-21
DRAWING NO.: UTS-3
SHEET NO.: 18

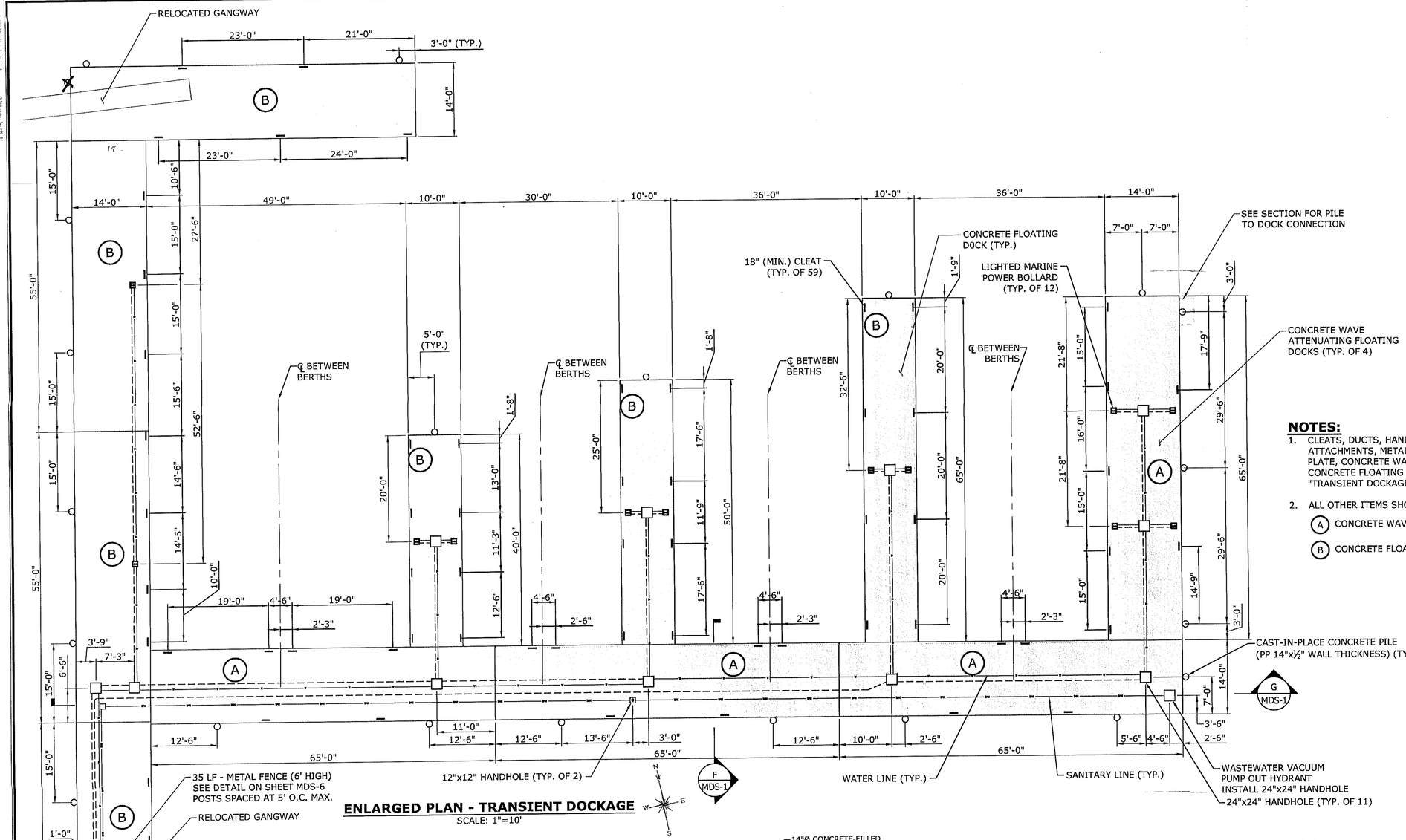

ENLARGED PLAN - TRANSIENT DOCKAGE

SCALE: 1"=10'

NOTES:

1. CLEATS, DUCTS, HANDHOLES, KNOCK-OUTS, FENDERS, PILE GUIDE ATTACHMENTS, METAL FENCE (6' HIGH), ALUMINUM GRATE, ALUMINUM PLATE, CONCRETE WAVE ATTENUATING FLOATING DOCKS AND CONCRETE FLOATING DOCKS SHALL BE PAID FOR UNER ITEM "TRANSIENT DOCKAGE".
2. ALL OTHER ITEMS SHOWN TO BE PAID FOR UNDER ITS OWN ITEM.
   - (A) CONCRETE WAVE ATTENUATING FLOATING DOCKS
   - (B) CONCRETE FLOATING DOCKS

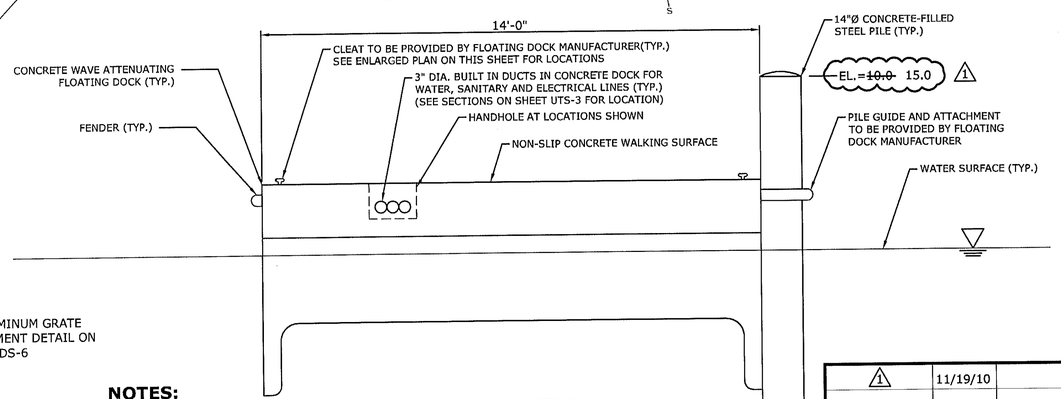

NOTES:

1. ALL CLEATS, HANDHOLE ENCLOSURES, PILE GUIDES, AND ASSOCIATED DOCK HARDWARE TO BE PROVIDED WITH DOCK.
2. FLOATING DOCK MANUFACTURER TO SUBMIT SHOP DRAWINGS AND LAYOUT TO ENGINEER FOR APPROVAL PRIOR TO DOCK FABRICATION.

F MDS-1 **SECTION**

SCALE: ½"=1'-0"

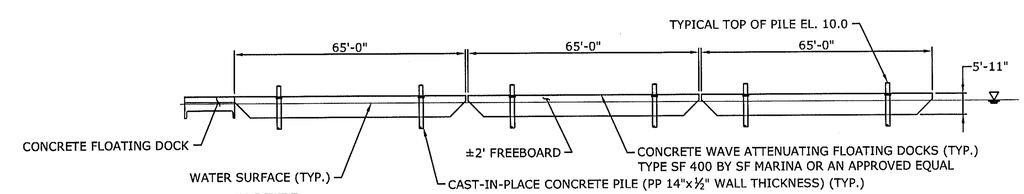

NOTES:

1. CONCRETE WAVE ATTENUATING FLOATING DOCKS TO BE TYPE SF 400 BY SF MARINA OR AN APPROVED EQUAL.
2. WOOD FENDERS SHALL BE PRESSURE TREATED PINE.
3. TWO CONNECTORS PER JOINT EACH CONNECTOR TO HAVE A MINIMUM BREAKING LOAD OF 120 TONS.
4. EACH PONTOON TO ACCEPT UTILITY SERVICES: ELECTRICAL, SANITARY, AND WATER.
5. PONTOON SHALL BE MOORED WITH 14" Ø CONCRETE-FILLED STEEL PILES DRIVEN TO BEDROCK.

G MDS-1 **ELEVATION**

SCALE: 1"=20'

REVISION	DATE	CITY	DESCRIPTION
1	11/19/10		ADDENDUM #3

REVISIONS

City of New London Connecticut

CITY OF NEW LONDON

SUBMITTED BY: MMI DATE: 10/18/10

APPROVED BY: DATE:

CADD - FILENAME: CP-Details.dwg

DRAWING TITLE: MISCELLANEOUS DETAILS

CITY PIER REHABILITATION

PROJECT NO.: 2389-21

DRAWING NO.: MDS-1

SHEET NO.: 19

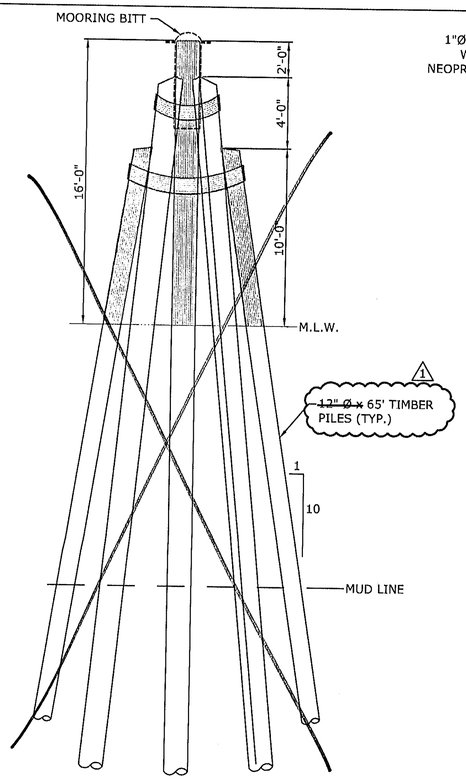

19 PILE DOLPHIN SECTION

SCALE: ¼" = 1'-0"

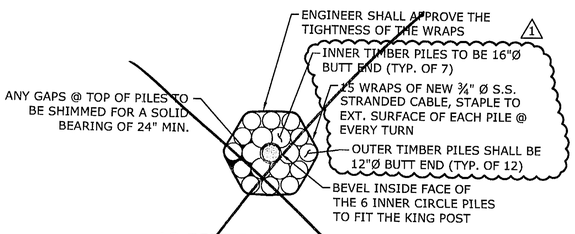

19 PILE DOLPHIN PLAN

SCALE: ¼" = 1'-0"

NOTES:

TO BE PAID FOR UNDER ITEM "19 PILE DOLPHIN".

U-SHAPED STAINLESS STEEL STAPLES SHALL BE 10 GAUGE AND MIN. EMBEDMENT OF 2" INTO TIMBER PILE TO FIT OVER ¾" S.S. CABLE. PROVIDE CUT SHEET FOR APPROVAL.

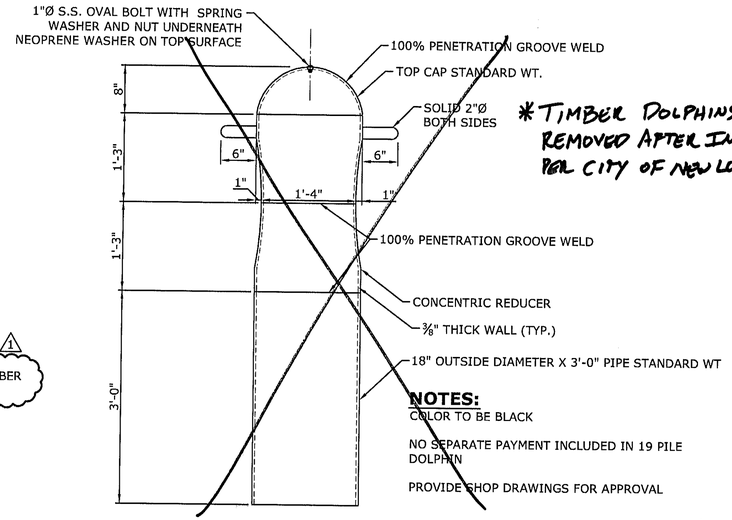

*TIMBER DOLPHINS REMOVED AFTER INSTALL PER CITY OF NEW LONDON

NOTES:

COLOR TO BE BLACK

NO SEPARATE PAYMENT INCLUDED IN 19 PILE DOLPHIN

PROVIDE SHOP DRAWINGS FOR APPROVAL

DOLPHIN MOORING DETAIL

SCALE: 1"=1'-0"

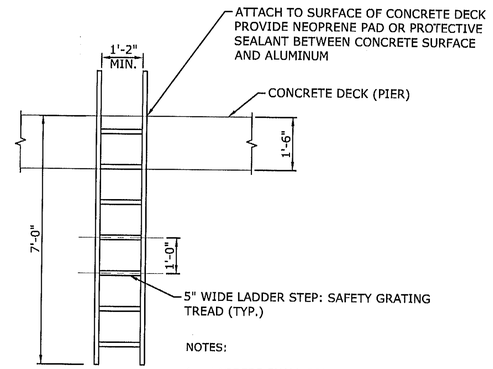

NOTES:

1. LADDERS SHALL COMPLY WITH ANSI A14.3, UNLESS OTHERWISE INDICATED.
2. TREAD RUNGS: SAFETY GRATING, SPACED 12 INCHES O.C. PROVIDE A NON-SLIP SURFACE.
3. MATERIAL: 6063-T5 MARINE GRADE ALUMINUM.
4. PROVIDE SHOP DRAWINGS FOR APPROVAL.

ALUMINUM LADDER DETAIL

SCALE: ½"=1'-0"

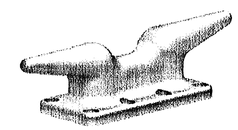

3D VIEW

NOTE:

COLOR TO BE BLACK. SEE SPECIAL PROVISIONS.

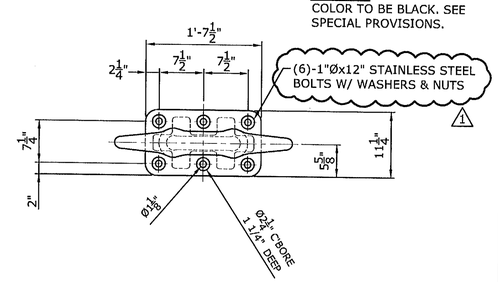

PLAN VIEW

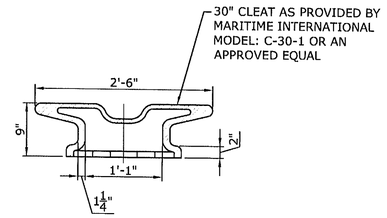

SECTION VIEW

CAST STEEL CLEAT DETAIL ON PIER

SCALE: 1"=1'-0"

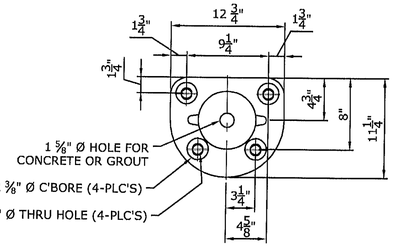

PLAN

NOTES:

COLOR TO BE BLACK

SEE SPECIAL PROVISIONS

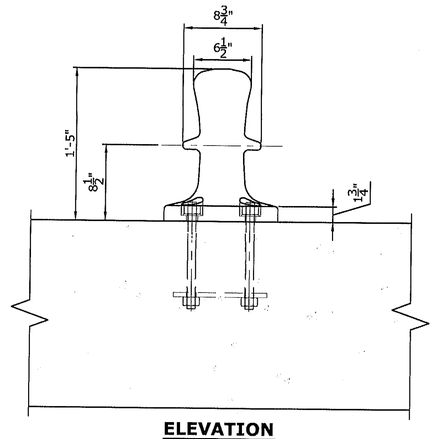

ELEVATION

CAST STEEL BOLLARD MOORING DETAIL ON PIER

SCALE: 1 ½"=1'-0"

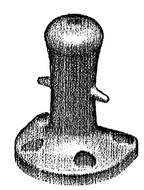

3D VIEW

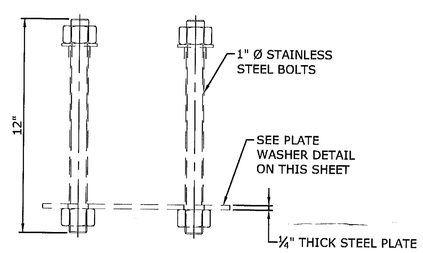

MOORING BOLLARD ANCHOR ASSEMBLY

SCALE: 1 ½"=1'-0"

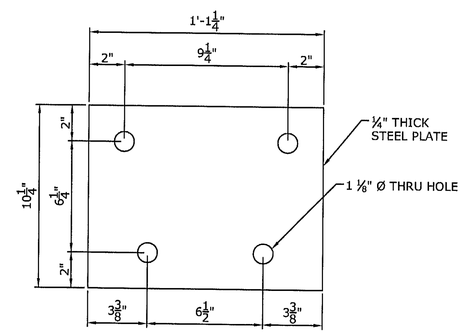

MOORING BOLLARD PLATE WASHER

SCALE: 1 ½"=1'-0"

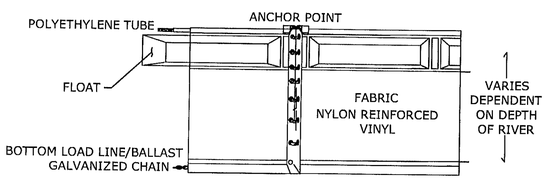

TURBIDITY CURTAIN FLOATING BOOM

NOT TO SCALE

NOTE

TO BE PAID FOR UNDER ITEM "REMOVAL OF EXISTING STRUCTURE".

REVISION	DATE	CITY	DESCRIPTION
1	11/19/10		ADDENDUM #3

REVISIONS

City of New London — Connecticut

CITY OF NEW LONDON

SUBMITTED BY: MMI — DATE: 10/18/10

APPROVED BY: — DATE:

CADD - FILENAME: CP-Details.dwg

DRAWING TITLE: MISCELLANEOUS DETAILS

CITY PIER REHABILITATION

PROJECT NO.: 2389-21

DRAWING NO.: MDS-2

SHEET NO.: 20

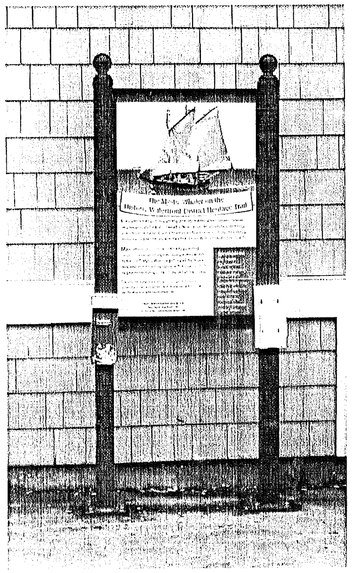

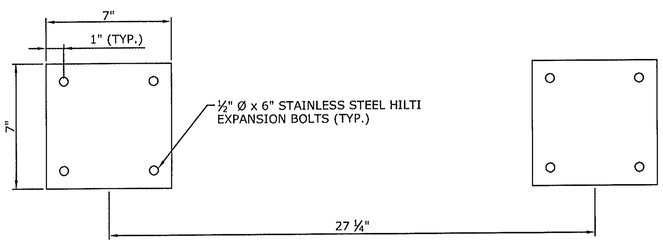

MYSTIC WHALER SIGN 'A' ATTACHMENT DETAIL
SCALE: 3"=1'-0"

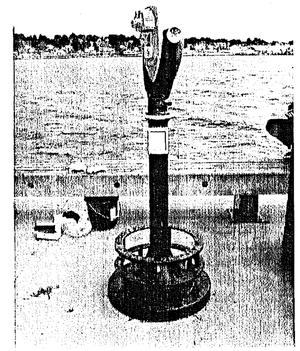

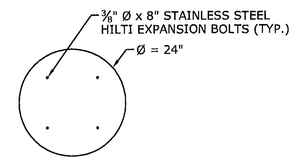

TELESCOPE 'C' ATTACHMENT DETAIL
SCALE: ¾"=1'-0"

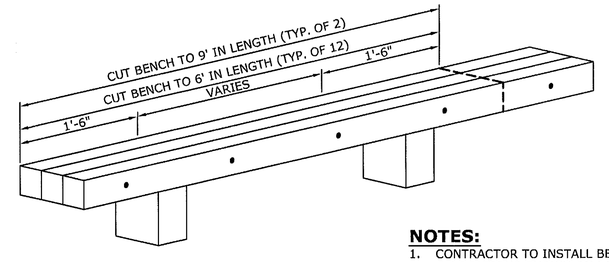

INVENTORY OF EXISTING BENCHES

LENGTH	QUANTITY (EA.)
13'-9"	1
13'-0"	1
12'-0"	19
11'-3"	2
11'-0"	1
10'-8"	2
9'-8"	7
9'-4"	5
8'-10"	7
6'-0"	1
5'-2"	3
4'-4"	1

BENCH DETAIL
NOT TO SCALE

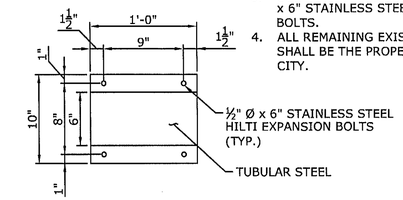

BENCH BASE PLATE DETAIL
SCALE: 1 ½"=1'-0"

NOTES:
1. CONTRACTOR TO INSTALL BENCHES @ LOCATIONS SHOWN ON LAYOUT PLAN.
2. CONTRACTOR TO REMOVE & RESET BASE AS SHOWN ON BENCH DETAIL.
3. CONTRACTOR TO USE ALL NEW ½" Ø x 6" STAINLESS STEEL EXPANSION BOLTS.
4. ALL REMAINING EXISTING BENCHES SHALL BE THE PROPERTY OF THE CITY.

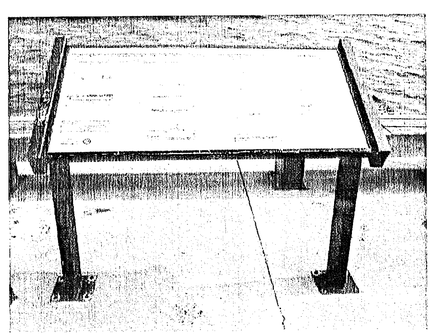

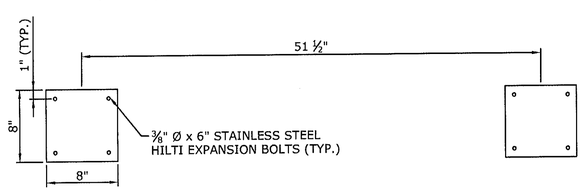

SHIP AND VESSEL SIGN 'B' ATTACHMENT DETAIL
SCALE: 1 ½"=1'-0"

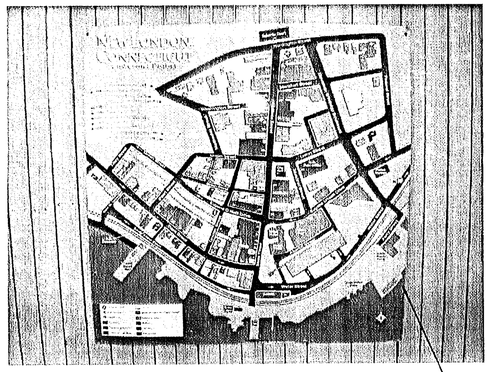

SIGN 'D' DETAIL
NOT TO SCALE

INSTALL EXISTING SIGN ON STEEL SCREEN FENCE W/ (8)-¼" SELF TAPPING SCREWS BOTTOM OF SIGN TO BE 2' FROM FINISHED GRADE

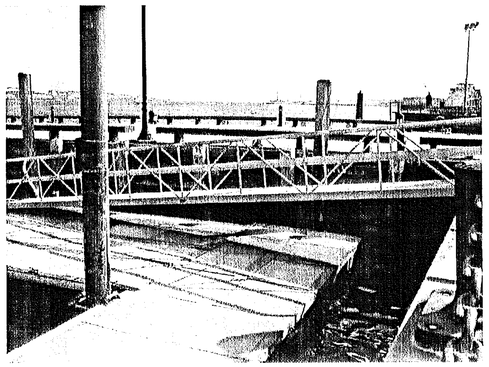

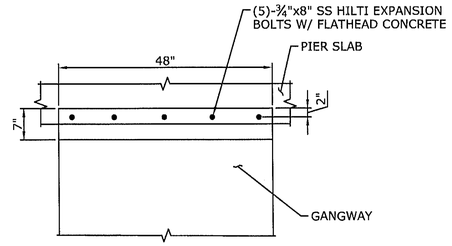

RELOCATED GANGWAY ATTACHMENT DETAIL
SCALE: ¾"=1'-0"

NOTE:
ALL DETAILS SHOWN ON THIS SHEET SHALL BE PAID FOR UNDER ITEM "REMOVE AND RESET AMENITIES".

REVISION	DATE	CITY	DESCRIPTION

REVISIONS

City of New London Connecticut

CITY OF NEW LONDON

SUBMITTED BY: MMI DATE: 10/18/10
APPROVED BY: DATE:
CADD - FILENAME: CP-STR.dwg

DRAWING TITLE: MISCELLANEOUS DETAILS

CITY PIER REHABILITATION

PROJECT NO.: 2389-21
DRAWING NO.: MDS-3
SHEET NO.: 21

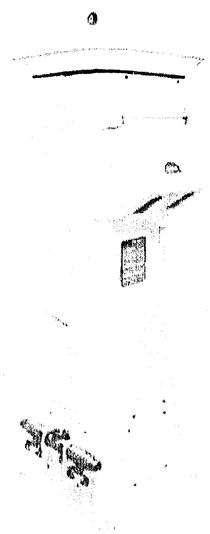

3D VIEW

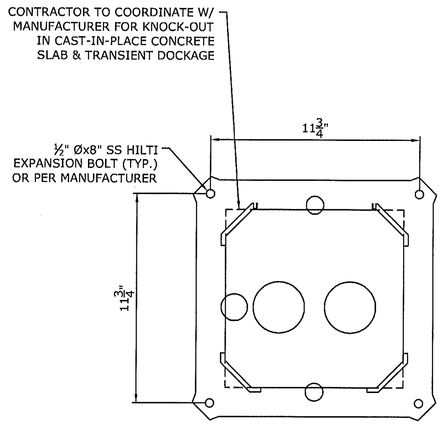

LIGHTED MARINE POWER BOLLARD DETAIL
SCALE: 3"=1'-0"

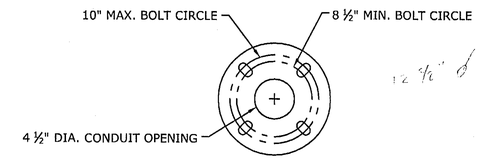

BASE DETAIL
SCALE: ¾"=1'-0"

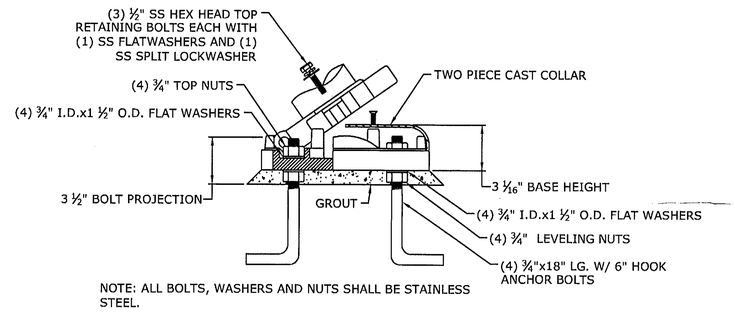

NOTE: ALL BOLTS, WASHERS AND NUTS SHALL BE STAINLESS STEEL.

SITE LIGHT BASE CONNECTION DETAIL
SCALE: ¾"=1'-0"

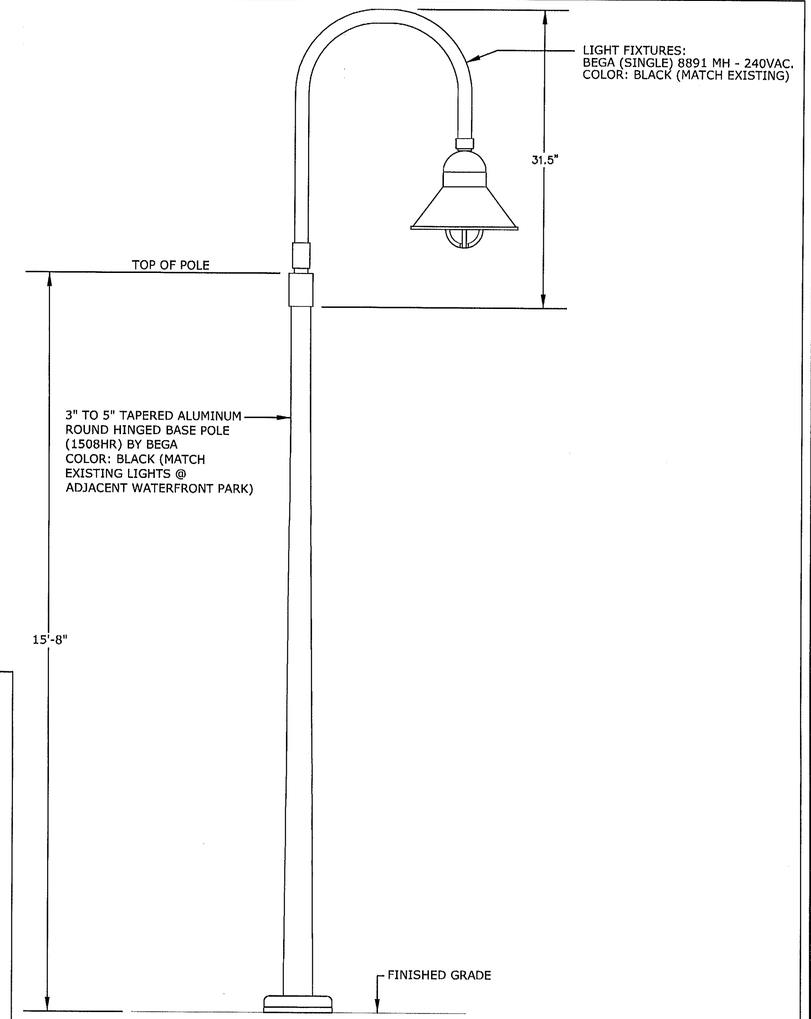

DECORATIVE LIGHT POLE & LIGHT FIXTURE DETAIL
NOT TO SCALE

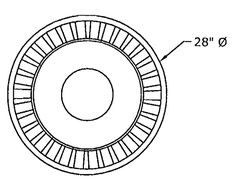

PLAN

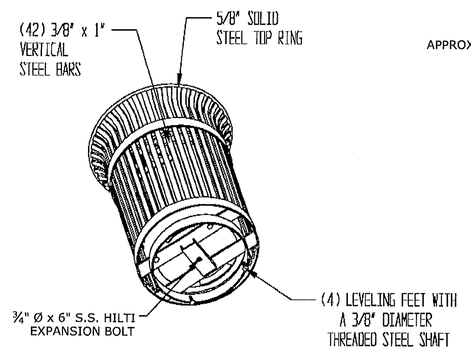

CONNECTION

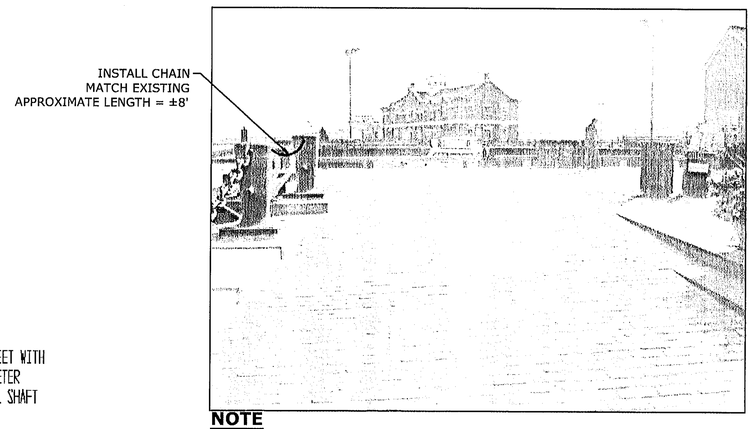

NOTE
TO BE PAID FOR UNDER ITEM "REMOVE & RESET AMENITIES.

CHAIN @ REMOVED GANGWAY
NOT TO SCALE

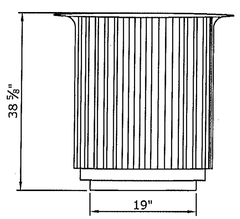

ELEVATION

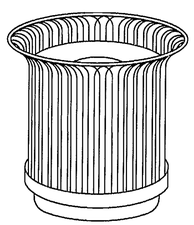

3D VIEW

TRASH CAN DETAIL
NOT TO SCALE

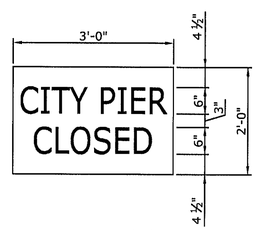

SIGN 'E'
NOT TO SCALE

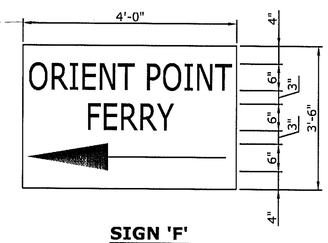

SIGN 'F'
NOT TO SCALE

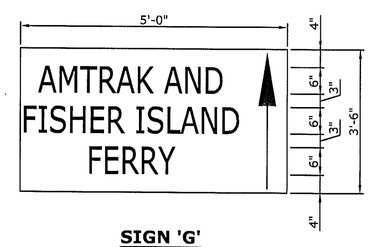

SIGN 'G'
NOT TO SCALE

REVISION	DATE	CITY	DESCRIPTION

REVISIONS

City of New London Connecticut

CITY OF NEW LONDON

SUBMITTED BY: MMI DATE: 10/18/10
APPROVED BY: DATE:
CADD - FILENAME: CP-Details.dwg

DRAWING TITLE: MISCELLANEOUS DETAILS

CITY PIER REHABILITATION

PROJECT NO.: 2389-21
DRAWING NO.: MDS-4
SHEET NO.: 22

NOTE
EDGE DRAIN SHALL BE PAID FOR UNDER ITEM "CONCRETE PAVERS".

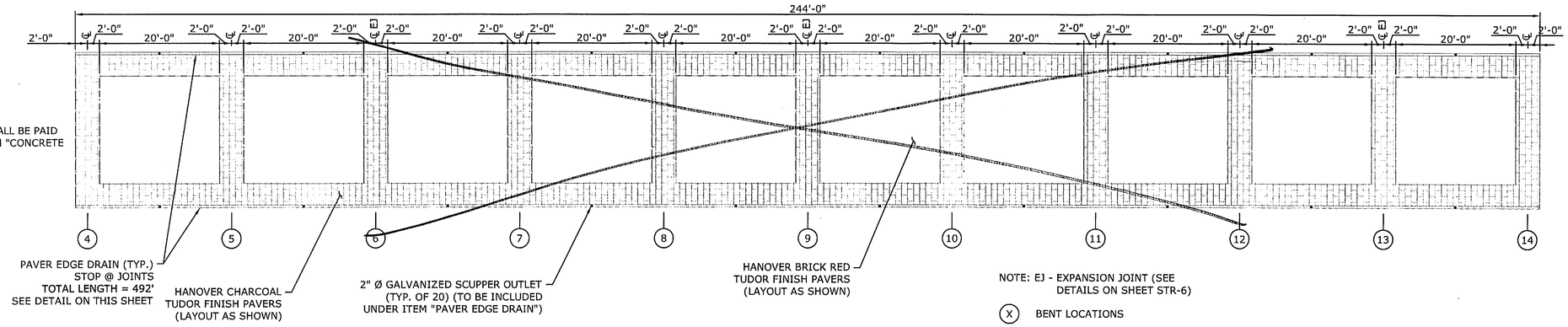

CONCRETE PAVERS REMOVED FROM PROJECT

PAVER LAYOUT PLAN
SCALE: 1"=10'-0"

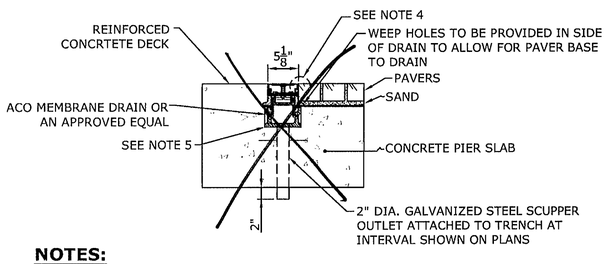

NOTES:

1. PAVERS TO BE INSTALLED 1/8" ABOVE CHANNEL EDGE.
2. REFER TO MANUFACTURER'S LATEST INSTALLATION INSTRUCTIONS FOR COMPLETE DETAILS.
3. THE PAVER COURSE ADJACENT TO THE CHANNEL EDGE MUST BE FULLY BONDED TO THE CONCRETE SURROUND.
4. THE SURFACE DRAINAGE SYSTEM SHALL BE POLYMER CONCRETE H100 SHALLOW CHANNEL SYSTEM WITH THE MEMBRANE DRAIN TOP ADAPTOR AS MANUFACTURED BY ACO POLYMER PRODUCTS, INC., CHARDON, OH. OR AN APPROVED EQUAL.
5. CHANNELS WILL BE MANUFACTURED FROM POLYESTER RESIN POLYMER CONCRETE.
6. THE H100 CHANNEL SHALL BE 4 INCHES NOMINAL INSIDE WIDTH WITH A 6.1 INCHES OVERALL WIDTH AND 4 INCHES OVERALL DEPTH. ALL CHANNELS SHALL BE INTERLOCKING WITH A MALE/FEMALE JOINT. EACH CHANNEL SHALL HAVE PREFORMED 4 INCHES ROUND DRILL-OUTS ON THE BOTTOM FOR VERTICAL CONNECTION WITH UNDERGROUND PIPING.
7. THE MEMBRANE DRAIN CHANNEL SHALL BE 4 INCHES NOMINAL INSIDE WIDTH WITH A 5.1 INCHES OVERALL WIDTH AND THE H100 WITH MEMBRANE DRAIN SYSTEM SHALL BE 7.8 INCHES OVERALL HEIGHT.
8. CHANNEL SHALL WITHSTAND LOADING TO HS-20 LOADING. GRATES SHALL BE SECURED USING ACO QUICKLOK OR AN APPROVED EQUAL. MEMBRANE TOP ADAPTOR SHALL BE SECURED WITH TWO BOLTS, BRACKET AND REMOVEABLE QUICKLOK BAR. CHANNEL AND GRATE SHALL BE INDEPENDANTLY CERTIFIED TO MEET THE SPECIFIC LOAD CLASS.
9. POLYMER CONCRETE SHALL HAVE MATERIAL PROPERTIES OF: COMPRESSIVE STRENGTH RANGE BETWEEN 14,000-14,500 PSI; FLEXURAL STRENGTH BETWEEN 3600-4500 PSI; TENSILE STRENGTH OF 1500 PSI. THE MATERIAL WATER ABSORPTION RATE SHALL NOT EXCEED 0.1% BY WEIGHT AND SHALL BE RESISTANT TO PROLONGED SALT EXPOSURE, REPETITIVE FROST CYCLES AND CHEMICALLY RESISTANT TO DILUTE ACIDS AND ALKALIS.
10. GRATE TO BE ADA IRON ACO PART NO. **03314** OR AN APPROVED EQUAL.
11. THE SYSTEM SHALL BE INSTALLED IN ACCORDANCE WITH THE MANUFACTURER'S INSTRUCTIONS AND RECOMMENDATIONS.

PAVER EDGE DRAIN DETAIL
SCALE: 1"=1'-0"

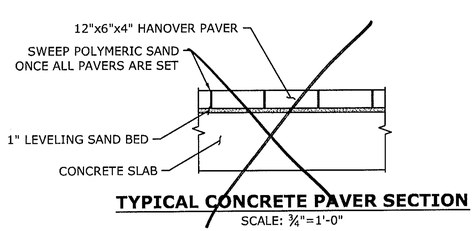

TYPICAL CONCRETE PAVER SECTION
SCALE: ¾"=1'-0"

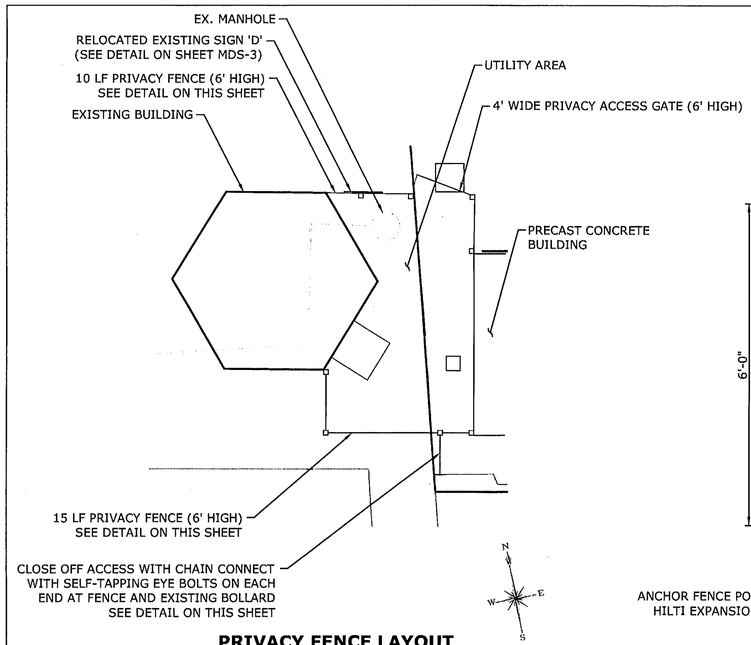

PRIVACY FENCE LAYOUT
SCALE: 1"=5'

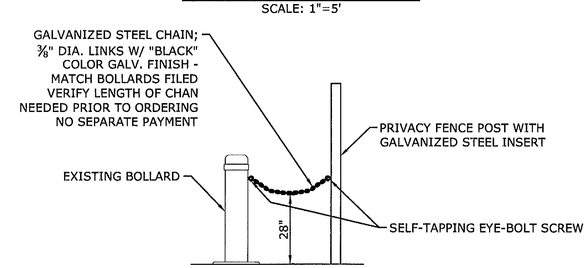

CHAIN BETWEEN BOLLARD & FENCE
NOT TO SCALE

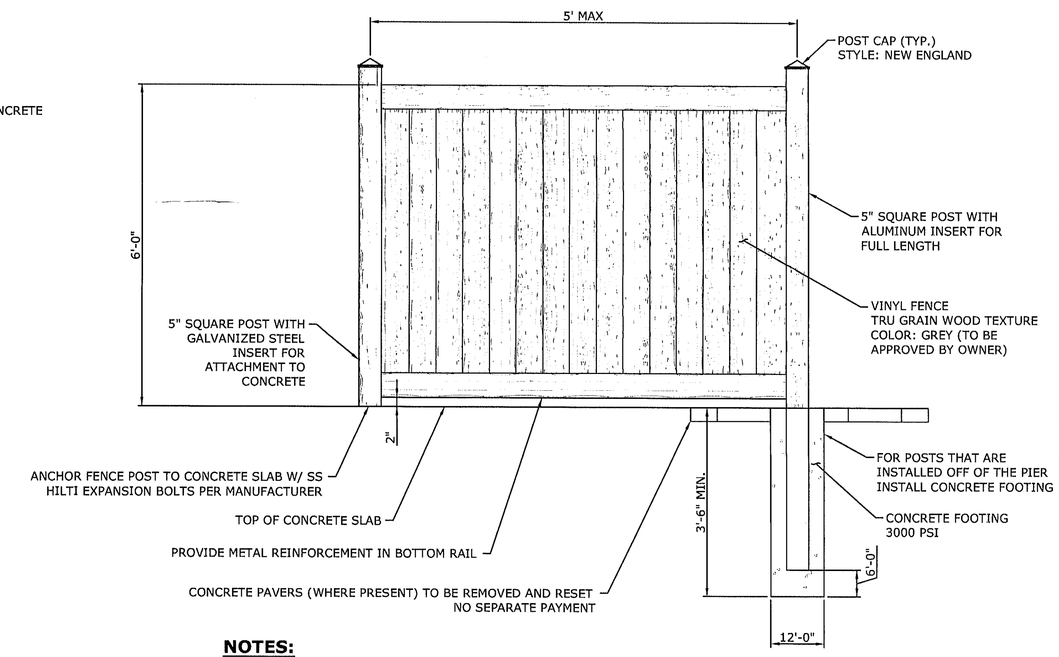

NOTES:

1. FENCE TO BE PROVIDED BY HUSKER VINYL, INC. OF HUMPHREY, NEVADA OR PHOENIX FENCE INC. OF EDMONTON, ALBERTA CANADA OR AN APPROVED EQUAL.
2. GATE SECTION TO HAVE NYLON AND STEEL HINGES AND LOCKABLE LATCH OR LOCKING MECHANISM.
3. SEE SPECIAL PROVISIONS.
4. ALL HARDWARE, LOCKING SYSTEM, POSTS, ANCHOR POST SYSTEM AND FOOTINGS INCLUDED IN THE COST OF "PRIVACY FENCE (6' HIGH).

PRIVACY FENCE (6' HIGH)
SCALE: ¾"=1'-0"

REVISION	DATE	CITY	DESCRIPTION

REVISIONS

City of New London
Connecticut

CITY OF NEW LONDON

SUBMITTED BY: MMI DATE: 10/18/10
APPROVED BY: DATE:
CADD - FILENAME: CP-Details.dwg

DRAWING TITLE:
MISCELLANEOUS DETAILS

CITY PIER REHABILITATION

PROJECT NO.: 2389-21
DRAWING NO.: MDS-5
SHEET NO.: 23

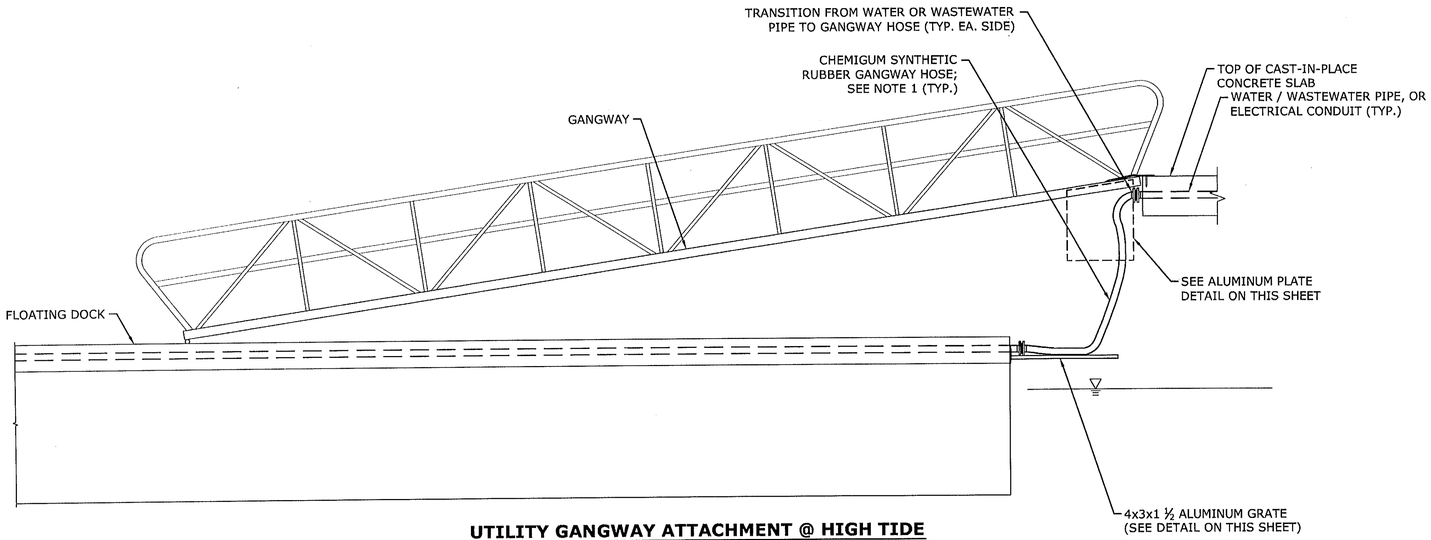

UTILITY GANGWAY ATTACHMENT @ HIGH TIDE

SCALE: ⅜"=1'-0"

NOTES:

1. PROVIDE ADEQUATE ELECTRICAL CONDUIT AND FLEXIBLE GANGWAY HOSE AS TO ALLOW MOVEMENT OF UTILITIES IN CONJUNCTION WITH GANGWAY FROM FIXED DOCK TO FLOATING DOCK.
2. PROVIDE NO. OF CONDUITS NECESSARY TO PROVIDE TRANSITION FROM FIXED DOCK TO FLOATING DOCK FOR ALL REQUIRED UTILITIES. PROVIDE PROPER CABLETRAY WIDTH TO ACCOMMODATE ALL ELECTRICAL CONDUCTORS.
3. CAP CONDUITS AT FIXED AND FLOATING DOCK PENETRATIONS.

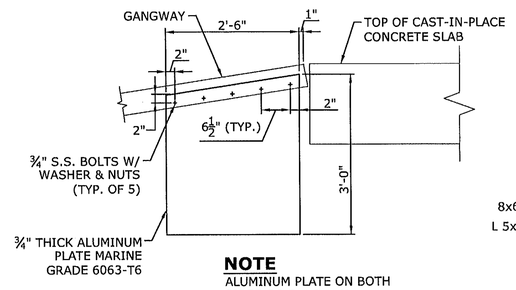

NOTE
ALUMINUM PLATE ON BOTH SIDES OF GANGWAY.

ALUMINUM PLATE DETAIL @ GANGWAY

SCALE: ¾"=1'-0"

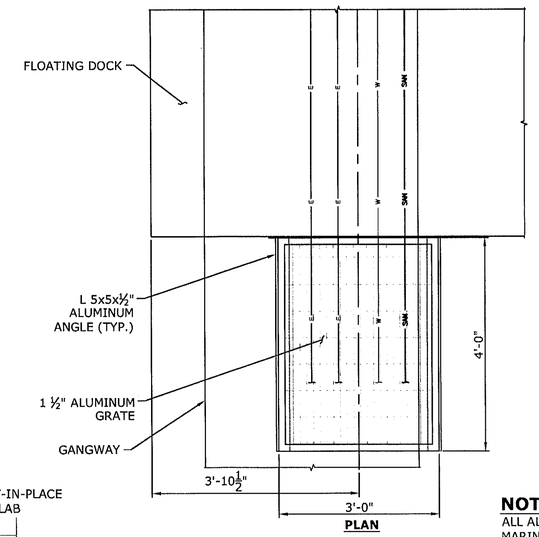

PLAN

NOTE
ALL ALUMINUM SHALL BE MARINE GRADE 6063-T6.

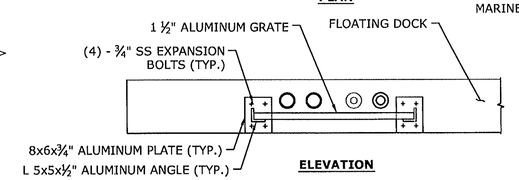

ELEVATION

ALUMINUM GRATE

SCALE: ¾"=1'-0"

NOTE
TO BE PAID FOR UNDER ITEM "TRANSIENT DOCKAGE".

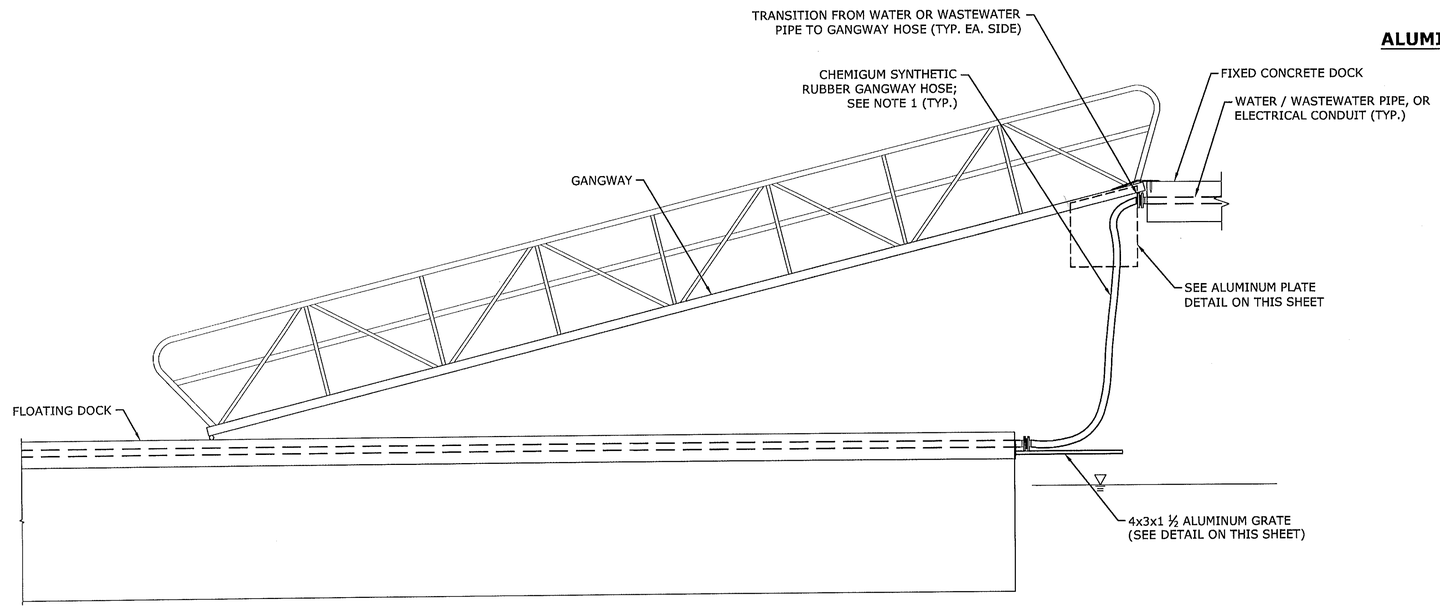

UTILITY GANGWAY ATTACHMENT @ LOW TIDE

SCALE: ⅜"=1'-0"

NOTES:

1. PROVIDE ADEQUATE ELECTRICAL CONDUIT AND FLEXIBLE GANGWAY HOSE AS TO ALLOW MOVEMENT OF UTILITIES IN CONJUNCTION WITH GANGWAY FROM FIXED DOCK TO FLOATING DOCK.
2. PROVIDE NO. OF CONDUITS NECESSARY TO PROVIDE TRANSITION FROM FIXED DOCK TO FLOATING DOCK FOR ALL REQUIRED UTILITIES. PROVIDE PROPER CABLETRAY WIDTH TO ACCOMMODATE ALL ELECTRICAL CONDUCTORS.
3. CAP CONDUITS AT FIXED AND FLOATING DOCK PENETRATIONS.

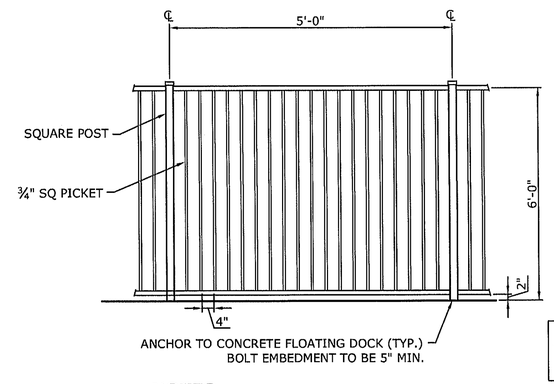

NOTE
TO BE PAID FOR UNDER ITEM "TRANSIENT DOCKAGE".

NOTES

1. ATTACH POSTS WITH BASEPLATE AND CONCRETE ANCHORS. COORDINATE WITH FLOATING DOCK MANUFACTURER PRIOR TO CONSTRUCTION. PROVIDE NEOPRENE PAD BETWEEN ALUMINUM BASEPLATE AND CONCRETE SURFACE.
2. FENCE HEIGHT: 6'-0"
   COLOR: SILVER
   MATERIAL: MARINE GRADE ALUMINUM 6063-T6
3. SUBMIT SHOP DRAWINGS TO ENGINEER FOR APPROVAL.

METAL FENCE (6' HIGH)

NOT TO SCALE

REVISION	DATE	CITY	DESCRIPTION

REVISIONS

City of New London, Connecticut

CITY OF NEW LONDON

SUBMITTED BY: MMI DATE: 10/18/10
APPROVED BY: DATE:
CADD - FILENAME: CP-Details.dwg

DRAWING TITLE: MISCELLANEOUS DETAILS

CITY PIER REHABILITATION

PROJECT NO.: 2389-21
DRAWING NO.: MDS-6
SHEET NO.: 24

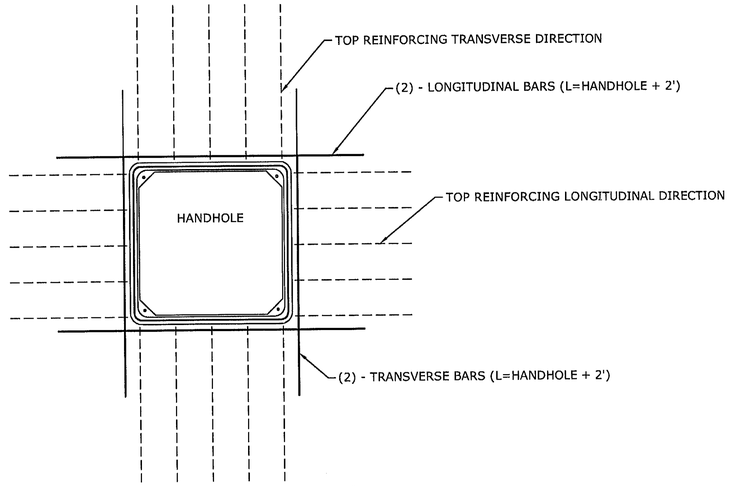

REINFORCING @ HANDHOLES

SCALE: 1"=1'-0"

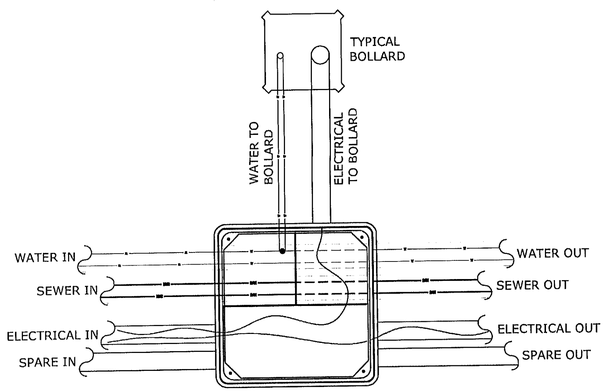

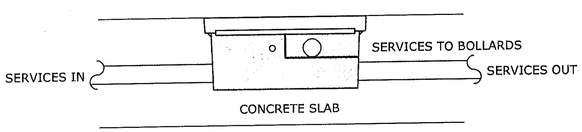

HANDHOLE BOX DETAIL

SCALE: 1"=1'-0"

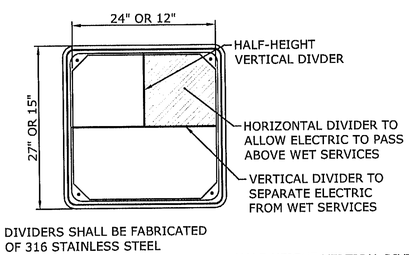

DIVIDERS SHALL BE FABRICATED OF 316 STAINLESS STEEL

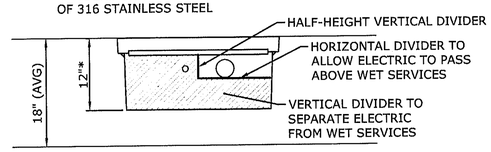

NOTE

* DEPTH @ TRANSIENT DOCKAGE SHALL BE SET BY MANUFACTURER TO BE APPROVED BY ENGINEER. PROVIDE SHOP DRAWINGS.

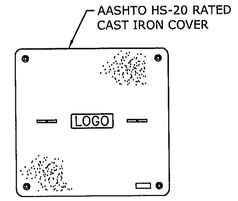

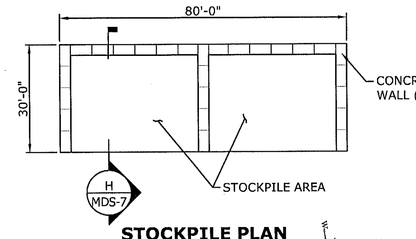

STOCKPILE PLAN

SCALE: 1"=20'-0"

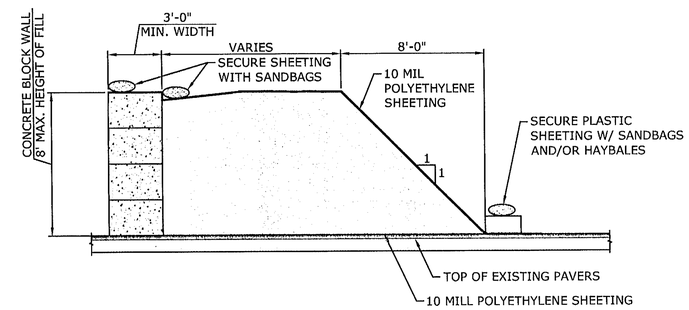

H
MDS-7

STOCKPILE SECTION

SCALE: ¼"=1'-0"

NOTE:

SANDBAGS AND/OR HAYBALES, POLYETHYLENE SHEETING AND CONCRETE BLOCKS SHALL BE PAID FOR UNDER ITEM "SECURING, CONSTRUCTION, AND DISMANTLING WASTE STOCKPILE AND TREATMENT AREA".

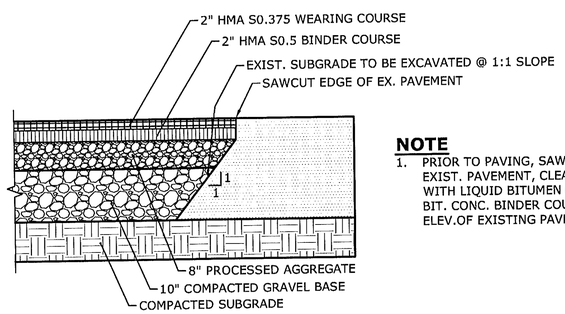

NOTE

1. PRIOR TO PAVING, SAWCUT EDGE OF EXIST. PAVEMENT, CLEAN & PAINT WITH LIQUID BITUMEN (TYP.). FINAL BIT. CONC. BINDER COURSE TO MEET ELEV.OF EXISTING PAVEMENT.

PAVEMENT REPAIR DETAIL

NOT TO SCALE

NOTE

TO BE PAID FOR UNDER ITEM "6" POLYVINYL CHLORIDE PIPE (SANITARY SEWER)".

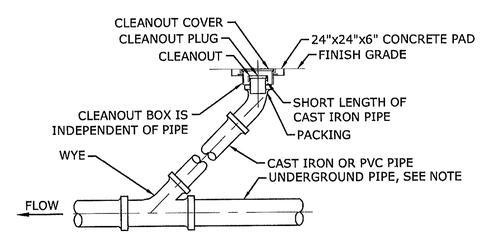

NOTE:

1. FOR END OF LINE CLEANOUT, INSTALL WATERTIGHT PLUG AT WYE.

EXTERIOR CLEANOUT DETAIL

NOT TO SCALE

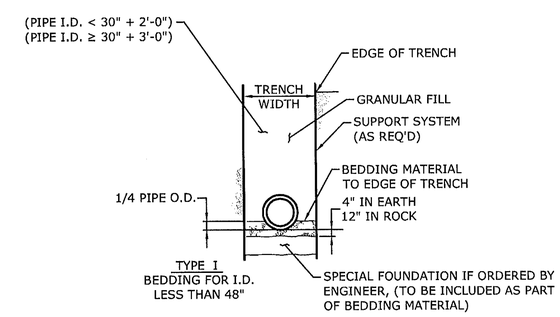

TYPICAL TRENCH SECTION

NOT TO SCALE

NOTE

TO BE PAID FOR UNDER ITEM "6" POLYVINYL CHLORIDE PIPE (SANITARY SEWER)".

REVISION	DATE	CITY	DESCRIPTION
1	11/19/10		ADDENDUM #3

REVISIONS

City of New London — Connecticut

CITY OF NEW LONDON

SUBMITTED BY: MMI — DATE: 10/18/10

APPROVED BY: — DATE:

CADD - FILENAME: CP-Details.dwg

DRAWING TITLE: MISCELLANEOUS DETAILS

CITY PIER REHABILITATION

PROJECT NO.: 2389-21

DRAWING NO.: MDS-7

SHEET NO.: 25

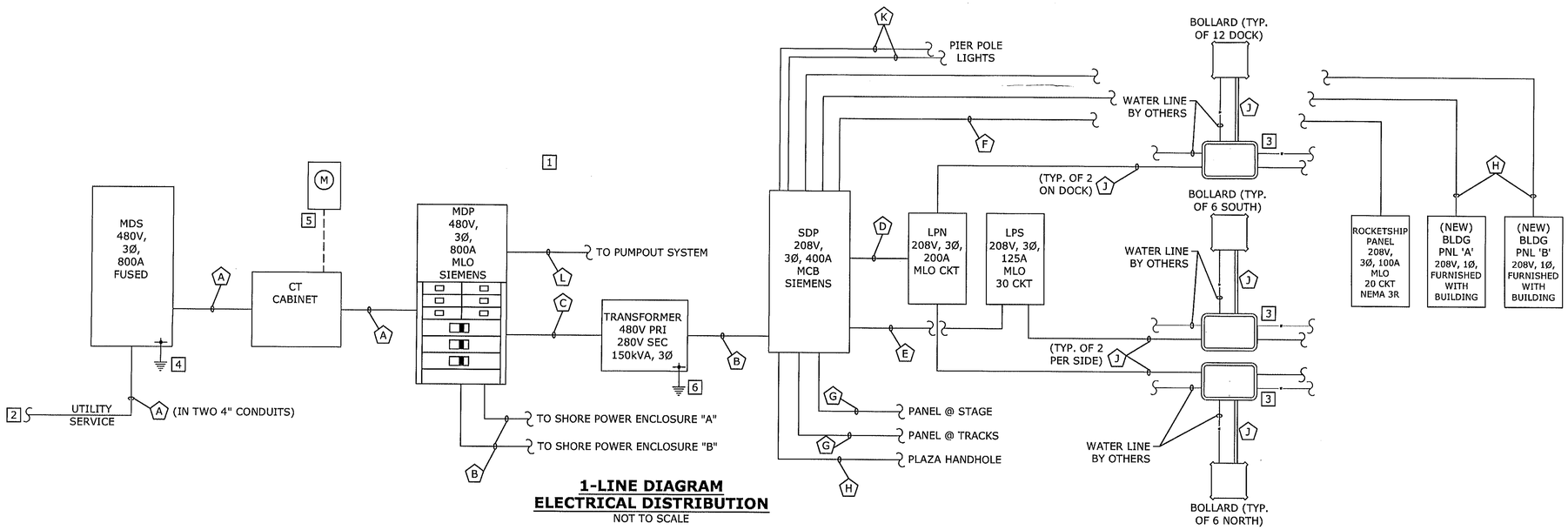

1-LINE DIAGRAM
ELECTRICAL DISTRIBUTION
NOT TO SCALE

1-LINE DIAGRAM NOTES

1. MDS, CT CABINET, METER SOCKET, MDP, TRANSFORMER, SDP, LPN, LPS AND THE ROCKETSHIP PANEL ARE EXISTING. THESE SHALL BE REMOVED FROM EXISTING ELECTRICAL BUILDING, STORED AND INSTALLED IN NEW BUILDING. ALL CONDUIT AND WIRE SHALL BE NEW.
2. CONTRACTOR SHALL COORDINATE SHUT-DOWN OF EXISTING ELECTRICAL SERVICE WITH OWNER AND UTILITY AND SHALL PROVIDE TEMPORARY LIGHTING OR TEMPORARY POWER SOURCE TO LIGHT AREAS OUTSIDE THE CONSTRUCTION AREA BUT SERVED THROUGH THE PIER ELECTRICAL DISTRIBUTION.
3. TYPICAL HANDHOLE & BOLLARD LOCATION. SEE HANDHOLE DETAIL FOR ADDITIONAL INFORMATION. FURNISH WITH DIVIDERS TO ALLOW FOR SEPARATION OF WATER & ELECTRICAL LINES. EACH BOLLARD SHALL HAVE A MAIN BUSSED FEED AND MULTIPLE OUTLETS INCLUDING INTEGRAL CIRCUIT BREAKERS. REFER TO BOLLARD SCHEDULE FOR OUTLET REQUIREMENTS AT EACH LOCATION.
4. PROVIDE NEW GROUNDING ELECTRODE IN ACCORDANCE WITH NEC ARTICLE 250 AND UTILITY REQUIREMENTS. PROVIDE CONNECTION TO COLD WATER PIPE IN ADJACENT PIT, TO REINFORCING STEEL IN NEW SLAB AND IN NEAREST PILING, AND TO BUILDING STEEL IF APPLICABLE. USE MINIMUM #1/0 CONDUCTOR.
5. CURRENT TRANSFORMERS, METER & CONNECTING WIRING SHALL BE FURNISHED & INSTALLED BY CL&P. CONTRACTOR SHALL FURNISH & INSTALL CONDUIT AND RELOCATE METER SOCKET IN COMPLIANCE WITH UTILITY SPECIFICATIONS. COORDINATE METER LOCATION WITH OWNER & UTILITY.
6. PROVIDE CONNECTION TO GROUNDING ELECTRODE IN ACCORDANCE WITH NEC ARTICLE 250. USE MINIMUM #2 CONDUCTOR.

FEEDER & BRANCH CIRCUIT SIZES

- (A) 800 AMP, 3Ø: 4 SETS @ 4 #3/0 AWG & 1 #1/0 AWG GROUND IN 2-1/2" CONDUITS.
- (B) 400 AMP, 3Ø: 2 SETS @ 4 #3/0 AWG & 1 #3 AWG GROUND IN ONE 3" CONDUIT.
- (C) 225 AMP, 3Ø: 4 #4/0 AWG & 1 #6 AWG GROUND IN 2-1/2" CONDUIT.
- (D) 200 AMP, 3Ø: 4 #3/0 AWG & 1 #6 AWG GROUND IN 2-1/2" CONDUIT.
- (E) 125 AMP, 3Ø: 4 #1 AWG & 1 #6 AWG GROUND IN 2" CONDUIT.
- (F) 100 AMP, 3Ø: 4 #3 AWG & 1 #8 AWG GROUND IN 1-1/2" CONDUIT.
- (G) 100 AMP, 1Ø: 3 #3 AWG & 1 #8 AWG GROUND IN 1-1/2" CONDUIT.
- (H) 50 AMP, 1Ø: 3 #8 AWG & 1 #10 AWG GROUND IN 1-1/2" CONDUIT.
- (J) BOLLARD FEEDER: 4 #1 AWG & 1 #6 AWG GROUND IN 3" CONDUIT.
  NOTE THAT 3" SPARE SHALL RUN THROUGH PIER BOLLARD HANDHOLES ALSO.
- (K) 20 AMP, 120V: 2 #10 AWG & 1 #10 AWG GROUND IN 1"
- (L) 15 AMP, 480V: 4 #12 AWG & 1 #12 AWG GROUND IN 1"

* ALL CONDUCTORS SHALL BE TYPE XHHW, COPPER UNLESS INDICATED OTHERWISE.

STATE OF CONNECTICUT
ROBERT M. BANNING
No. 20801
LICENSED
PROFESSIONAL ENGINEER

REVISION	DATE	CITY	DESCRIPTION

REVISIONS

City of New London
Connecticut

CITY OF NEW LONDON

SUBMITTED BY: MMI DATE: 10/18/10
APPROVED BY: DATE:
CADD - FILENAME: CP-Electric.dwg

DRAWING TITLE:
ELECTRICAL DETAILS

CITY PIER REHABILITATION

PROJECT NO.: 2389-21
DRAWING NO.: E-1
SHEET NO.: 26

PANEL "LPN"

(EXISTING)

RATINGS: 240V/200 A
22,000 AIC

SERVICE: 208 Y/120V, 3 PHS/4-WIRE

LOCATION: ELEC. ROOM

MOUNTING: SURFACE

DESCRIPTION	NOTE	AMPS	TRIP AMP	POLE	CKT. TYP	CKT. NO.	A B C	CKT. NO.	CKT. TYP	POLE	TRIP AMP	AMPS	NOTE	DESCRIPTION
UTILITY BUILDING LIGHTS	3	6.0	20	1	A	1		2	A	1	20	5.0	3	FLAG POLE LIGHTS
ELEC ROOM RECEPT.	3	5.0	20	1	A	3		4	A	1	20	5.0	3	POLE LIGHTS AT FENCE
BATH/UTILITY RM RECEPT.	3	5.0	20	1	A	5		6	A	1	20	5.0	3	PLAZA LIGHTS
NORTH BOLLARDS B2, B5, B6		40.0	100	3	C	7		8	C	3	100	40.0		NORTH BOLLARDS B9, B10, B12
		40.0				9		10				40.0		
		40.0				11		12				40.0		
DOCK BOLLARDS B13,B14,B15,B16,B17,B18		40.0	100	3	C	13		14	C	3	100	40.0		DOCK BOLLARDS B19,B20,B21,B22,B23,B24
		40.0				15		16				40.0		
		40.0				17		18				40.0		
SPARE	3	--	30	1		19		20		1	30	--	3	SPARE
SPARE	3	--	50	2		21		22		2	50	--	3	SPARE
		--				23		24				--		
SPARE		--	100	2		25		26	A	1	20	5.0	3	STAGE FO LIGHTS
		--				27		28	A	1	20	5.0	3	STAGE FO LIGHTS
SPARE		--	20	1		29		30	A	1	20	5.0	3	BOLLARD LIGHTS – NORTH

NOTES:
1. PANELBOARD IS EXISTING SIEMENS TYPE S1 WITH 200A MAIN LUG.
2. PROVIDE CB LOCK.
3. EXISTING BREAKER TO REMAIN.
4. UPGRADE WIRE SIZE AS REQUIRED TO MAINTAIN 3% MAXIMUM VOLTAGE DROP.
5. TOTAL CONNECTED LOAD: PHASE A - 176.0, PHASE B - 175.0, PHASE C - 175.0 } 63.0 KVA BASED ON 175.0 AMPS/PHASE
6. CIRCUIT TYPE A: 120V, 3 WIRE IN CONDUIT.
7. CIRCUIT TYPE B: 208V, 1Ø, 4 WIRE IN CONDUIT.
8. CIRCUIT TYPE C: 208V, 3Ø, 5 WIRE IN CONDUIT.

PANEL "LPS"

(EXISTING)

RATINGS: 240V/125 A
22,000 AIC

SERVICE: 208 Y/120V, 3 PHS/4-WIRE

LOCATION: ELEC. ROOM

MOUNTING: SURFACE

DESCRIPTION	NOTE	AMPS	TRIP AMP	POLE	CKT. TYP	CKT. NO.	A B C	CKT. NO.	CKT. TYP	POLE	TRIP AMP	AMPS	NOTE	DESCRIPTION
SPARE	3	--	20	1		1		2	A	1	20	1.0	3	TIME CLOCK
SPARE	3	--	20	1		3		4		1	20	--	3	SPARE
SPARE	3	--	20	1		5		6		1	20	--	3	SPARE
SOUTH BOLLARDS B1, B3, B4		40.0	100	3	C	7		8	C	3	100	40.0		SOUTH BOLLARDS B7, B8, B11
		40.0				9		10				40.0		
		40.0				11		12				40.0		
SPARE	3	--	30	1		13		14		1	30	--	3	SPARE
SPARE	3	--	50	2		15		16		2	50	--	3	SPARE
		--				17		18				--		
SPARE	3	--	30	1		19		20		1	30	--	3	SPARE
SPARE	3	--	50	2		21		22		2	50	--	3	SPARE
		--				23		24				--		
SPARE	3	--	30	1		25		26		2	100	--	3	SPARE
						27		28				--		
						29		30	A	1	20	5.0		BOLLARD LIGHTS – SOUTH

NOTES:
1. PANELBOARD IS EXISTING SIEMENS TYPE S1 WITH 125A MAIN LUG.
2. PROVIDE CB LOCK.
3. EXISTING BREAKER TO REMAIN.
4. UPGRADE WIRE SIZE AS REQUIRED TO MAINTAIN 3% MAXIMUM VOLTAGE DROP.
5. TOTAL CONNECTED LOAD: PHASE A - 81.0, PHASE B - 80.0, PHASE C - 85.0 } 29.5 KVA BASED ON 82.0 AMPS/PHASE
6. CIRCUIT TYPE A: 120V, 3 WIRE IN CONDUIT.
7. CIRCUIT TYPE B: 208V, 1Ø, 4 WIRE IN CONDUIT.
8. CIRCUIT TYPE C: 208V, 3Ø, 5 WIRE IN CONDUIT.

PANEL "MDP"

(EXISTING)

RATINGS: 480V/800 A
22,000 AIC

SERVICE: 480 Y/277V, 3 PHS/4-WIRE

LOCATION: ELEC. ROOM

MOUNTING: SURFACE

DESCRIPTION	NOTE	AMPS	TRIP AMP	POLE	CKT. TYP	CKT. NO.	A B C	CKT. NO.	CKT. TYP	POLE	TRIP AMP	AMPS	NOTE	DESCRIPTION
						1		2						
						3		4						
						5		6						
SPARE	3	--	20	3	C	7		8	C	3	20	--	3	SPARE
		--				9		10				--		
		--				11		12				--		
PUMPOUT SYSTEM		8.0	15	3	C	13		14						
		8.0				15		16						
		8.0				17		18						
150 KVA TRANSFORMER (TO PANEL SDP)	3	140	225	3	C	19		20						
		140				21		22						
		140				23		24						
						25		26						
						27		28						
						29		30						
						31		32	C	3	400	200	3	ENCLOSURE 'B' (SHORE POWER)
						33		34				200		
						35		36				200		
ENCLOSURE 'A' (SHORE POWER)	3	200	400	3	C	37		38						
		200				39		40						
		200				41		42						

NOTES:
1. PANELBOARD IS EXISTING SIEMENS TYPE S4 WITH 800A MAIN LUGS.
2. PROVIDE CB LOCK.
3. EXISTING BREAKER TO REMAIN.
4. UPGRADE WIRE SIZE AS REQUIRED TO MAINTAIN 3% MAXIMUM VOLTAGE DROP.
5. TOTAL CONNECTED LOAD: PHASE A - 540.0, PHASE B - 540.0, PHASE C - 540.0 } 449.0 KVA BASED ON 540.0 AMPS/PHASE
6. CIRCUIT TYPE A: 277V, 3 WIRE IN CONDUIT.
7. CIRCUIT TYPE B: 480V, 1Ø, 4 WIRE IN CONDUIT.
8. CIRCUIT TYPE C: 480V, 3Ø, 5 WIRE IN CONDUIT.

PANEL "SDP"

(EXISTING)

RATINGS: 240V/400 A
22,000 AIC

SERVICE: 208 Y/120V, 3 PHS/4-WIRE

LOCATION: ELEC. ROOM

MOUNTING: SURFACE

DESCRIPTION	NOTE	AMPS	TRIP AMP	POLE	CKT. TYP	CKT. NO.	A B C	CKT. NO.	CKT. TYP	POLE	TRIP AMP	AMPS	NOTE	DESCRIPTION
		--				1		2				--		
SPARE	3	--	50	3	C	3		4	C	3	50	--	3	SPARE
		--				5		6				--		
SPACE						7		8				20.0		
EXISTING LOAD	3	10.0	30	2	B	9		10	C	3	100	20.0	3	ROCKETSHIP PANEL
		10.0				11		12				20.0		
PANEL AT TRACKS	3	30.0	100	2	B	13		14	B	2	50	15.0	3	PLAZA HANDHOLE
		30.0				15		16				15.0		
PANEL AT STAGE	3	30.0	100	2	B	17		18						
		30.0				19		20						
PIER POLE LTS – NORTH		6.0	20	1	A	21		22						
PIER POLE LTS – SOUTH		5.0	20	1	A	23		24	B	2	50	25.0		BUILDING PANEL 'A'
BUILDING PANEL 'B'		25.0	50	2	B	25		26				25.0		
		25.0				27		28						
						29		30						
						31		32	C	3	200	140.0		
						33		34				140.0	3	PANEL LPN
						35		36				140.0		
PANEL LPS	3	65.0	125	3	C	37		38						
		65.0				39		40						
		65.0				41		42						

NOTES:
1. PANELBOARD IS EXISTING SIEMENS WITH 400A MAIN BREAKER.
2. PROVIDE CB LOCK.
3. EXISTING BREAKER TO REMAIN.
4. UPGRADE WIRE SIZE AS REQUIRED TO MAINTAIN 3% MAXIMUM VOLTAGE DROP.
5. TOTAL CONNECTED LOAD: PHASE A - 350.0, PHASE B - 311.0, PHASE C - 325.0 } 118.3 KVA BASED ON 328.7 AMPS/PHASE
6. CIRCUIT TYPE A: 120V, 3 WIRE IN CONDUIT.
7. CIRCUIT TYPE B: 208V, 1Ø, 4 WIRE IN CONDUIT.
8. CIRCUIT TYPE C: 208V, 3Ø, 5 WIRE IN CONDUIT.

STATE OF CONNECTICUT — JOHN R. BOLAND — No. 20995 — LICENSED PROFESSIONAL ENGINEER

REVISION	DATE	CITY	DESCRIPTION

REVISIONS

City of New London — Connecticut

CITY OF NEW LONDON

SUBMITTED BY: MMI — DATE: 10/18/10

APPROVED BY: — DATE:

CADD - FILENAME: CP-Electric.dwg

DRAWING TITLE: ELECTRICAL DETAILS

CITY PIER REHABILITATION

PROJECT NO.: 2389-21

DRAWING NO.: E-2

SHEET NO.: 27

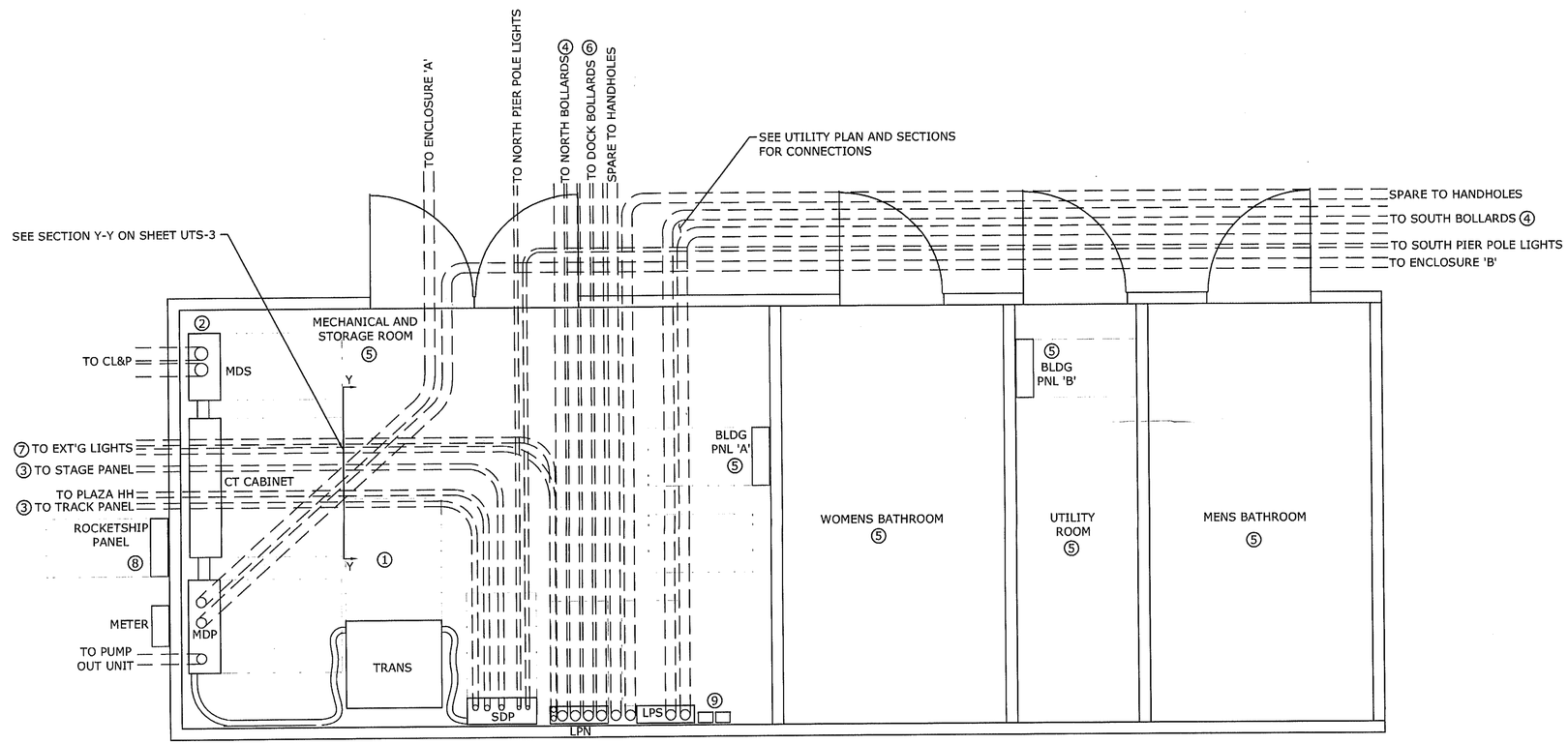

UTILITY BUILDING ELECTRICAL PLAN

SCALE: ½"=1"-0"

PLAN NOTES.

1. MDS, CT CABINET, METER SOCKET, MDP, TRANSFORMER, SDP, LPN AND LPS ARE EXISTING. THESE SHALL BE REMOVED FROM EXISTING ELECTRICAL BUILDING, STORED AND INSTALLED IN NEW BUILDING. ALL CONDUIT AND WIRE SHALL BE NEW.
2. PROVIDE BLOCKING BEHIND MDS TO ALLOW SWEEP OF MAIN SERVICE ENTRANCE CONDUITS WITH MINIMUM UTILITY REQUIRED BEND RADIUS. SET SWITCH MOUNTING HEIGHT ACCORDINGLY.
3. CONTRACTOR SHALL REFEED EXISTING 100 AMP, 1-PHASE STAGE AND TRACK PANELS. ALLOW FOR NEW CONDUIT FROM THE EXTENT OF THE PIER DEMOLITION AND NEW WIRE TO THE PANELS. REFER TO 1-LINE DIAGRAM FOR DETAILS.
4. EACH 3" CONDUIT SHALL CONTAIN WIRING FOR FEEDER TO THREE BOLLARDS. REFER TO 1-LINE DIAGRAM FOR ADDITIONAL DETAILS.
5. PREFABRICATED BUILDING WILL BE PROVIDED COMPLETE WITH LIGHTS, SWITCHES, RECEPTACLES AND MECHANICAL EQUIPMENT. CONTRACTOR SHALL PROVIDE FEEDERS TO TWO "BUILDING PANELS" FOR THESE LOADS AS COORDINATED WITH PROVIDER.
6. CONDUIT SHALL CONTAIN WIRING FOR BRANCH CIRCUITS IN FIVE BOLLARDS ON FLOATING DOCKS. REFER TO 1-LINE DIAGRAM FOR ADDITIONAL DETAILS.
7. CONTRACTOR SHALL REFEED SIX EXISTING 120V, 20 AMP CIRCUITS SERVING LIGHTS OUTSIDE PROJECT AREA. ALLOW FOR NEW CONDUIT FROM THE EXTENT OF THE PIER DEMOLITION AND NEW WIRE TO THE NEAREST LIGHT. REFER TO PANEL SCHEDULE FOR DETAILS.
8. CONTRACTOR SHALL REMOVE AND REINSTALL EXISTING NEMA 3R PANELBOARD ON BUILDING EXTERIOR.
9. CONTRACTOR SHALL REMOVE AND REINSTALL EXISTING CONTRACTORS AND OTHER LIGHTING CONTROLS. COORDINATE EXACT LOCATIONS IN FIELD.

ALL DASHED CONDUIT RUNS ARE WITHIN NEW CONCRETE SLAB. SLAB WILL BE 18" THICK ON PIER AND 12" THICK UNDER PRECAST BUILDING WITH THE BOTTOM OF ALL CONDUITS SET 4" ABOVE THE BOTTOM OF THE SLAB. COORDINATE CONDUIT SWEEPS AND DEVICE MOUNTING ACCORDINGLY. ABOVE-SLAB CONDUIT WITHIN BUILDING IS OMITTED FOR CLARITY AND SHALL BE FIELD COORDINATED.

STATE OF CONNECTICUT — STEPHEN P. MAY — No. 20931 — LICENSED PROFESSIONAL ENGINEER

REVISION	DATE	CITY	DESCRIPTION

REVISIONS

City of New London — Connecticut

CITY OF NEW LONDON

SUBMITTED BY: MMI — DATE: 10/18/10

APPROVED BY: — DATE:

CADD - FILENAME: CP-Electric.dwg

DRAWING TITLE: ELECTRICAL DETAILS

CITY PIER REHABILITATION

PROJECT NO.: 2389-21

DRAWING NO.: E-3

SHEET NO.: 28

APPENDIX F
USCG Electrical & Telecom CTSO

ENCLOSURE (A)

U.S. Coast Guard C4&IT Shore Tie Cable Standards

U.S. Coast Guard C4&IT Shore Tie Cable Standards

(Rev 1.4)

Effective Date:

19 June 2013

X _____

Chief, Enterprise Infrastructure Mgmt (CG-64)

X _____

Chief, Enterprise Infrastructure Product Line

(This document defines the standards to be used for U.S. Coast Guard Shore Tie cables.)

Table of Contents

1. Shore Tie Cable Standards

This document provides best practices, based on the collaboration of members from the Telephony; Voice, Data and Video (TVDV) working group and CG Subject Matter Experts (SME's). This document replaces the current 64-CSTO-M2000.3D-20090930 standard. C4&IT shore tie cables provide shipboard connectivity to the provided voice circuits and data circuit from the servicing shore facility. No other services (ie; CCTV, CATV etc.) are considered part of the standard C4&IT shore tie. Space for vendor provided CATV will be allocated on the shoreside pier mound(s).

1.1. **Cable:** Shore Tie cable is Belden's 9389, 18 gauge, stranded 6 pair cable. Extensive research and testing went into the selection of the Belden 9389 cable to replace the LSTTOP10 that was widely used in the past. The 9389 is considerably lighter, is cat 5 data compliant with individually shielded pairs, and is a COTS product. The smaller size and weight make this cable easier to handle and store while increasing the performance and quality of service to all cutters. Each conductor has the cable pair is printed on it, numbered 1 thru 6.

1.2 **Connectors:** Currently the Coast Guard standard connector for all shore ties will be the Russell Stoll SKW series. This series is an aluminum connector that provides considerably less corrosion than the previous steel versions. Each connector will be coupled via a 45˚ adapter to reduce water intrusion and reduce strain on the cable.

1.2.1 **Cable Connectors:** All cable plugs will be the RussellStoll SKWP12XG.

1.2.2 **Shore-side and Shipboard Connector:** Shore-side and shipboard receptacles will be the RussellStoll SKWR12XG.

1.3 **Pin-outs:** All vessels shall use the same configuration for plugs as follows: Plug 1 will consist of pins 1-8 as 4 dedicated voice circuits and pins 9-12 as the dedicated CGOne circuit. If required, Plug 2 will consist of pins 1-12 as 6 dedicated voice circuits for units requiring more than 4 dedicated voice lines. National Security Cutters (NSC) will utilize a third plug that will be unique to the NSC and will consist of pins 1-12 as 6 dedicated voice circuits. Shipboard receptacles will be the RussellStoll SKWR12XG.

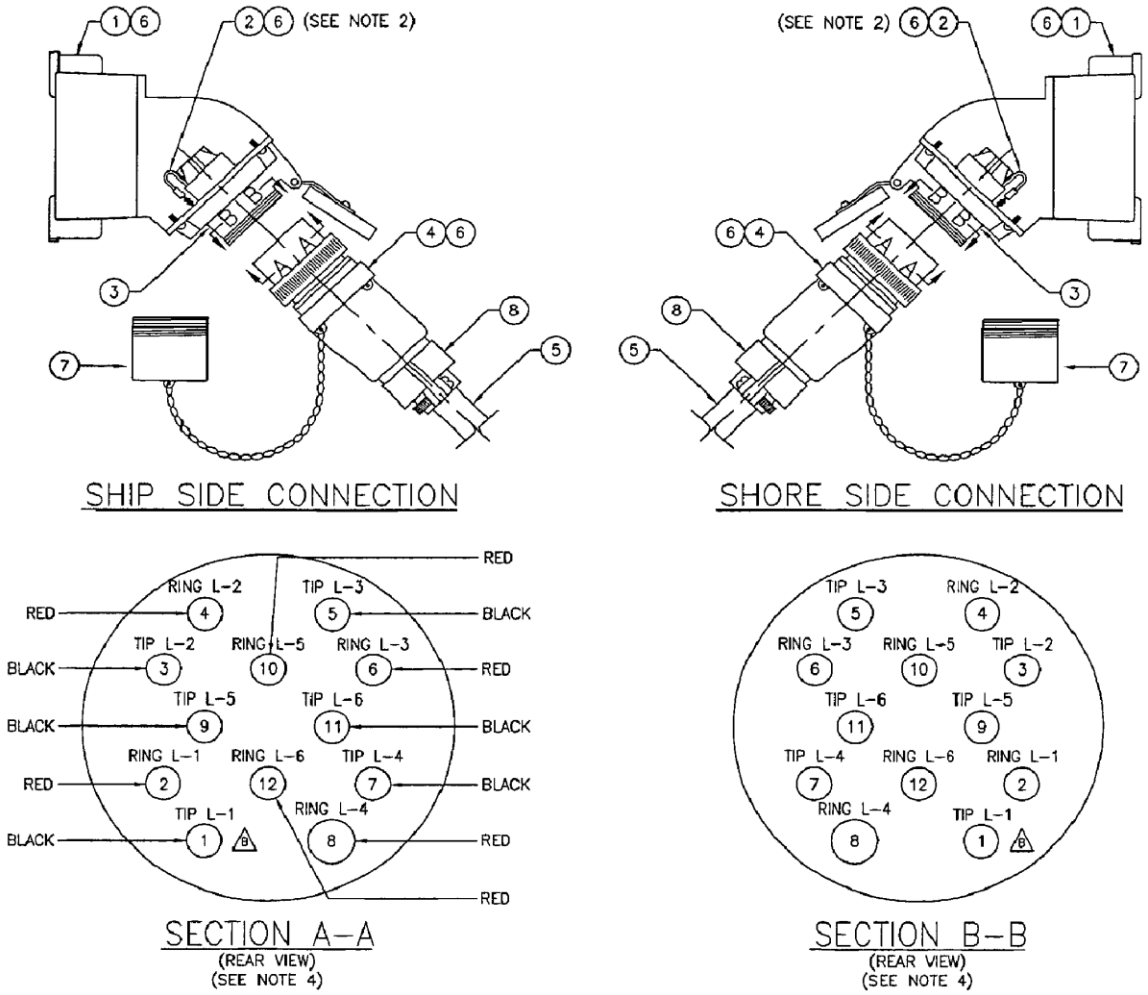

Image 1.1

****See full drawing with notes on last page****

1.4 **Configurations:**

1.4.1 **NSC:** Due to the unique requirements of the NSC, each cutter will utilize 3 shore tie receptacles. Refer to 1.3 for pin-outs.

1.4.2 **FRC, 175, 210, 225, 240, 270, 378, 399, 420 and EAGLE:** Each cutter will utilize 2 shore tie receptacles. Refer to 1.3 for pin-outs.

1.4.3 **140 and below:** Each cutter will utilize 1 shore tie receptacle. Refer to 1.3 for pin-outs.

1.5 **Shore-side Configuration:** Shoreside pier mound will provide 4 dedicated copper C4&IT shoretie receptacles (RussellStoll SKWR12XG) and 2 future fiber optic receptacles (Delphi Hermaphroditic 12-CH receptacles) per image 1.3. Copper receptacles will be fed with 2 each 25 pair Category 5-E rated cables via dedicated 4 inch conduits and shall be terminated using

standard 5-pin Gas Tube protection devices (image 1.2). Conduits will be direct home-runs from the closest Telecommunications Closet with a maximum of 180 degrees of sweep between readily accessible pull boxes. Each shoreside pier mound will provide for future fiber optic receptacles via dedicated 4 inch conduits, allowing for the mounting of the 2 each Delphi Hermaphroditic connectors. Conduits will be direct home-runs from the closest Telecommunications Closet with a maximum of 180 degrees of sweep between readily accessible pull boxes.

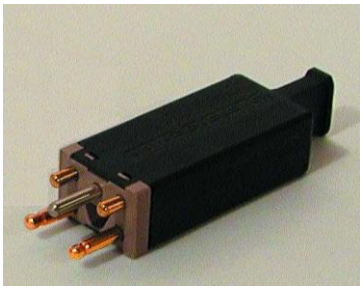

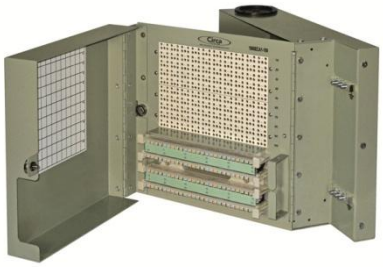

Image 1.2
Standard 5 Pin Gas Tube Protection

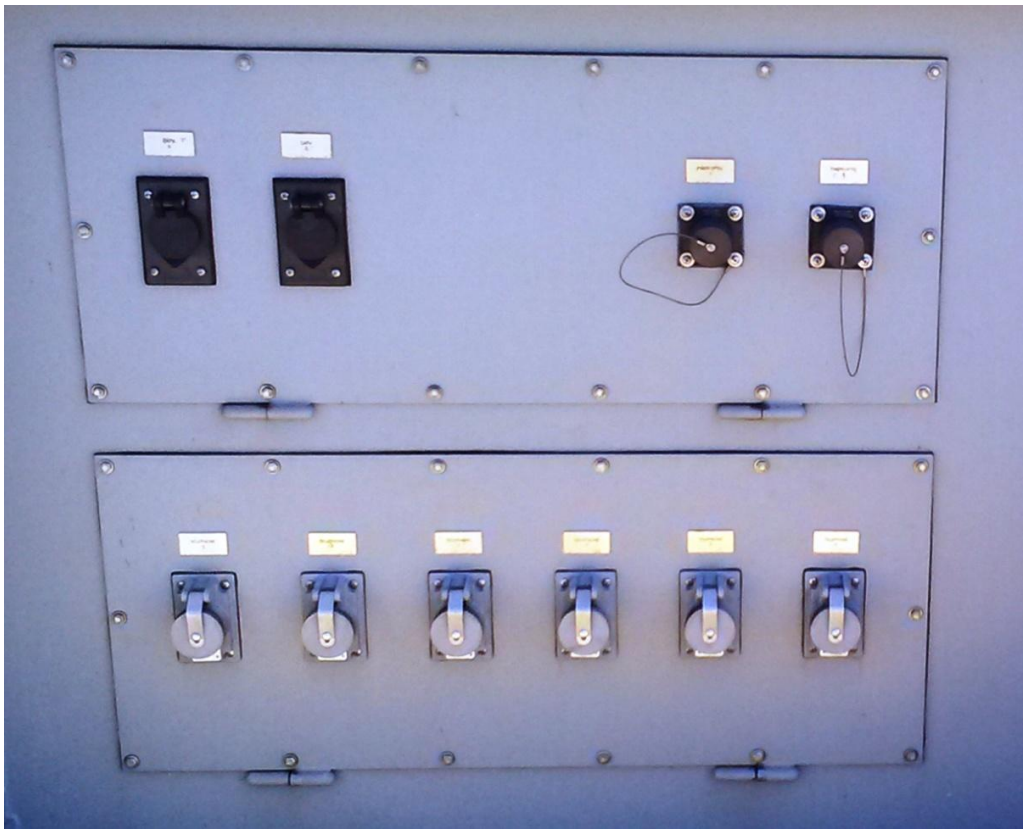

Image 1.3
Pier box configuration
(Standard is 4 connectors, NSC configuration shown above)

Connector Assembly: Cutter Shore Tie cable assembly.

1. Strip back approximately 6 inches of PVC sheathing from both ends of cable.

2. Remove aluminum foil from each of the 6 pairs of cable and removing the grounding cable as well. Ensure that you label each pair as close to the PVC sheathing as possible.

3. Remove the three nylon filler strands to the PVC sheathing

4. Cut pairs 1 thru 4 to 2" and pairs 5 and 6 to 1 ½".

5. Strip back approximately 3/8" of sheathing from each wire and tin the ends

6. Install onto cable in order the following parts or items: heat shrink tubing (optional), Gland nut/cable clamp, Gland nut copper washer, cable bushing, Plug lower housing, flange with rubber seal.

   Note: Use a little bit of cable lube/gel on the outside of the cable to facilitate lubricating the cable bushing.

7. Install wires in order starting with pair 6 tip (black) into pin 11 and ring (red) into pin 12. Pair 5 tip into pin 9 and ring into pin 10. Then start with pair 1 tip and ring into pins 1 and 2 and continue until all pins and wires have been installed.

8. Make sure to remove the ground strap connected to pin 1 of both the receptacle and the plug.

9. Assemble the connector and test continuity of each pin before weather proofing and putting into service.

   Notes: Spray corrosion inhibitor on the untreated surfaces to help reduce corrosion from forming in addition to standard weather proofing.

10. Refer to TRACEN Petaluma Shore tie video for assembly steps and recommended weather proofing technique.

1.6 **Support:** ESU's shall be responsible for maintaining shoreside pier mound receptacles and infrastructure.

Initial cables for legacy cutters have or will be provided by the local ESU/ESD.

After delivery, cutters that have IT/ET personnel assigned will maintain and support their own cables.

Units who do NOT have IT/ET personnel attached will rely on the local ESU/ESD to provide support and maintenance for their shore tie cables.

ESU's will maintain spare cables based on their individual needs.

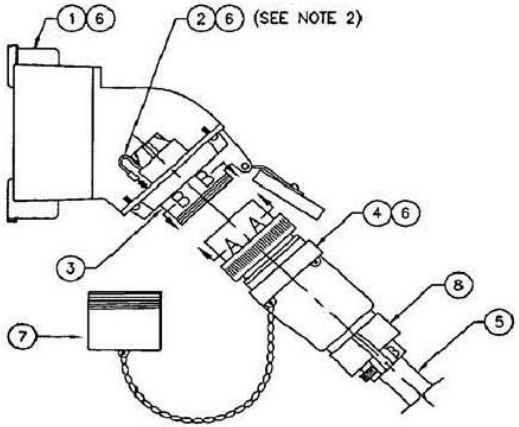

SHIP SIDE CONNECTION

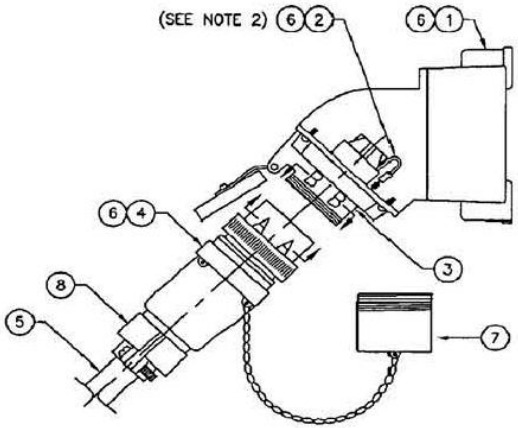

SHORE SIDE CONNECTION

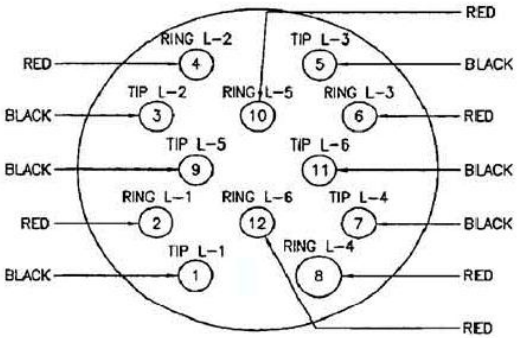

SECTION A-A
(REAR VIEW)
(SEE NOTE 4)

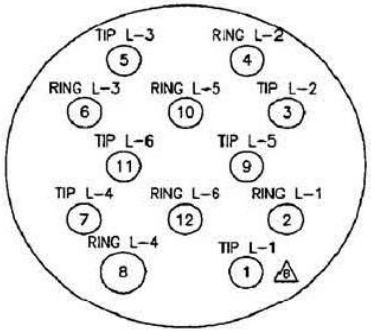

SECTION B-B
(REAR VIEW)
(SEE NOTE 4)

PLUG/RECEPTACLE PIN ASSIGNMENTS

LINE NO	PIN NO	ASSIGNMENT	COLOR CODE (SEE NOTES 1 & 3)
1	1	T-1	BLACK (SEE NOTE 2)
	2	R-1	RED
2	3	T-2	BLACK
	4	R-2	RED
3	5	T-3	BLACK
	6	R-3	RED
4	7	T-4	BLACK
	8	R-4	RED
5	9	T-5	BLACK
	10	R-5	RED
6	11	T-6	BLACK
	12	R-6	RED

B PLUG CONFIGURATION

LINE NO	SHORE TIE CABLE #1	SHORE TIE CABLE #2 & #3
1	VOICE	VOICE
2	VOICE	VOICE
3	VOICE	VOICE
4	VOICE	VOICE
5	DATA	VOICE
6	DATA	VOICE

REVISIONS

REV	SHEET	DESCRIPTION	BY	APPROVED	DATE
A	1	REVISED WIRING FOR PAIRS #5 AND #6	TS		12/10/91
B	1	CONVERTED TO ACAD FORMAT, ADDED PLUG CONFIGURATION AND NOTES 8, 9 & 10 REVISED PIN 1 IN SECTIONS "A-A" & "B-B", REVISED LIST OF MATERIAL, UPDATED NOTE 5	GJL		7/22/99
C		UPDATED COLOR CODE AND PINOUTS	GPS		6/18/2013

B LIST OF MATERIAL

PIECE NO	DESCRIPTION	QTY	A STOCK NUMBER B MANUFACTURER C SUGGESTED SOURCE	FURNISHED GFE	(E)	INST
1	CONDUIT BOX	2	FDWS-62 RUSSELSTOLL	X		
2	45° ANGLE ADAPTER	2	3678 A RUSSELSTOLL	X		
3	MULTI-CIRCUIT RECEPTACLE	2	SKWR12XG RUSSELSTOLL	X		
4	MULTI-CIRCUIT PLUG	2	SKWP12XG RUSSELSTOLL	X		
5	BELDEN 18AWG 6 PAIR CABLE	B	9389-1000-060	X		
6	PROTECTIVE CAP (MALE)	2	F26874C RUSSELSTOLL	X		
7	CABLE BUSHING SIZE 1/2"	2	JG32 RUSSELSTOLL	X		
8	VULCANIZING TAPE		5970-00-955-9976	X		
9	WEATHERPROOFING ELECTRICAL COATING		5970-00-965-3335	X		

GENERAL NOTES

1. DEVIATIONS FROM COLOR CODE, PIN ASSIGNMENTS OR POLARITY ARE NOT ALLOWED
2. GROUND STRAP FROM PIN NO. 1 OF ITEMS 3 AND 4 IS REMOVED.
3. SUGGESTED COLOR STANDARD AS PER NAVSEA 0981-LP-052-8092
4. VIEW SHOWN IS WIRING SIDE OF PLUGS/RECEPTACLES (REAR VIEW)
5. SEE PLUG CONFIGURATION BELOW
6. 210 WMEC'S, 270 WMEC'S AND 378 WHEC'S WILL HAVE TWO SHORE TIE CABLES
7. FOR VESSELS WITH TWO SHORE TIE CONNECTORS, BOTH CONNECTORS SHALL BE WIRED AS PER THIS PRINT
8. SHORE TIE CABLE NO 1 SHALL BE DESIGNATED WITH THE COLOR BLUE
9. SHORE TIE CABLE NO 2 SHALL BE DESIGNATED WITH THE COLOR RED
10. PLUG NO 1, LINE 4 DUAL PLUG CONFIGURATION IS FAX OR CO LINE IF DESIGNATED CO LINE DO NOT PLACE IN HUNT GROUP

C4IT Shore Tie

CG-642
Telephony Systems

SIZE	UPDATED:	SPEAR.GREGORY. P.1018239473	
C	6/18/2013		
SCALE NONE		30 SQ FT	SHEET 1 OF 1

(This document defines the standards to be used for U.S. Coast Guard Shore Tie cables.)

ENCLOSURE (B)

U.S. Coast Guard

Configuration Standard Technical Order

Electrical Shore Ties

U.S. Department of Homeland Security

United States Coast Guard

Configuration Standard Technical Order

Electrical Shore Ties

SILC-CSTO-36-11 21 27 11-04 / 20110506

Include signed and dated authorizing memo here.

RECORD OF CHANGES				
CHANGE NUMBER	DATE OF CHANGE	DATE ENTERED	DESCRIPTION OF CHANGE	BY WHOM ENTERED

Table of Contents

(B) Shore-Tie Grounding Diagrams

(C) Shore Power Standard Operating Instruction

(D) Transportable Shore Power Isolation Transformers

1. OVERVIEW

1.A Intent

This Configuration Standard Technical Order establishes standards for electrical shore ties for shore facilities applications. In conformance with logistics practices and to enhance home-porting interoperability, shore ties shall be standard for each cutter class and should be standard for each class of small boats. Standardization of shore-ties will normally occur during the acquisition phase with funding provided from the appropriation used to procure the new cutters/small boats.

This configuration standard addresses only the shore side facilities and equipment to provide electrical service to cutters and small boats. A companion configuration standard developed by the SFLC addresses the shipboard equipment necessary to connect and utilize the electrical shore tie services. An Interface Control Document has been prepared to highlight and clarify the interface between these two documents.

The boundary between this SILC Configuration Standard and that developed by the SFLC is the receptacle in the shore tie enclosure. For clarification purposes, the interface between the SILC and the SFLC configuration standards are identified below:

- SILC CSTO: The electrical distribution system and all associated equipment from the main utility transformer to the shore-tie receptacle on the pier.
- SFLC CSTO: The electrical system and all associated equipment from the plug on the shore side end of the shore-tie cable to the electrical system on the cutter/boat."

1.B Referenced Directives

A. 64-CSTO-M2000.3-08, C4&IT Shore Tie Configuration Standard
B. Recommended Waterfront Industrial & Contractor Power Design Practices.
C. SILC-CSTO-36-11 11 24 11-01/20100903, Shore Infrastructure Management Lexicon

1.C Development Team

Name	Representing Unit
Eric Tipping	FDCC
John Mathews	FDCC Detachment Seattle
Carl Lundquist	SFLC
Wade Williams	SFLC
David Robinson	CEU MIAMI
Al Boudreau	BSU KODIAK

2. SCOPE AND IMPACT

2.A Scope

This technical order defines the requirements for providing acceptable facility/vessel (cutters and small boats) electrical shore-ties throughout the Coast Guard for both new and existing assets.

2.A.1 Who Performs

The Shore Infrastructure Logistics Center (SILC) is responsible for executing this technical order for the shore side electrical system installation based upon the pier side power system requirements provided by Surface Forces Logistics Center (SFLC) for the particular classification of vessel to be serviced. The Facilities Design and Construction Center (FDCC) and the Civil Engineering Units (CEU) of the SILC are responsible for the technical content and executing the requirements of this technical order. The FDCC and the CEU organizations will execute this technical order through their contracting officers with appropriate AC&I or AFC-43 funding to bring facilities into compliance.

2.A.2 Applicable Assets

All surface forces (cutters and boats) assets and their homeport facilities are covered under this technical order. Homeport locations will be documented by approved decision memos.

2.A.3 When to Perform

Within three years of the date of this technical order, the PLMs will have established the baselines for electrical shore ties and will have completed a gap analysis. This establishes the basis for formulating a project funding plan to correct any deficiencies in existing facilities. Beginning with the date of this technical order, all new construction at piers and wharfs will comply with this technical order. All new cutters and boats will be delivered with an electrical shore tie conforming to this technical order. Configuration validation shall be completed during Functional Configuration Audits and Physical Configuration Audits on a regular schedule.

2.A.4 To Whom (Customers)

The technical order shall be used by all facility managers (CEU, BSU, Sector Logistic Officer or FDCC for new facilities) to plan, design and construct shore ties for all cutters and small boats. Coast Guard representatives at the shipyards building new cutters and small boats shall ensure compatible shore-tie cables have the appropriate matching plug for the shore receptacle as defined by the SFLC TWH for Naval Electrical Systems and SILC TWH for Electrical Shore Ties and required in the acquisition technical requirements."

2.A.5 Suppliers

CEUs/BSUs shall be responsible for procuring replacement shore ties when required. Cutters and boats will not construct their own shore ties. Sole source contracts for the procurement of standardized electrical shore ties are directed.

2.B Impact

Standardization of electrical shore-ties for cutters and small boats will significantly improve interoperability of surface forces.

2.B.1 High Power Cutters (HPC) - (175' and up)

Electrical shore-ties for larger cutters are currently standardized using NATO compliant 400 amp receptacles, and are normally provided using AC&I funds to modify/upgrade the waterfront facilities to support the new cutters.

2.B.2 Low Power Cutters (LPC) (65' to 175')

Electrical shore-ties for these cutters are currently non-standard and highly variable. Replacement of the existing shore-ties to meet this standard shall be accomplished as part of normal maintenance/ recapitalization actions. Electrical shore-ties to support new assets shall be constructed as part of the homeport preparation process using funds appropriated for the acquisition of the new vessel.

2.B.3 Small Boats (SB) (less than 65')

Electrical shore-ties for small boats are currently non-standard and highly variable. Replacement of the existing shore-ties to meet this standard shall be accomplished as part of normal maintenance/ recapitalization actions unless safety concerns require more immediate replacement. Electrical shore-ties to support new assets shall be constructed as part of the homeport preparation process using funds appropriated for the acquisition of the new vessel.

2.C Process Links

To insure compliance with the principles of configuration management, electrical shore ties are established as a Configuration Item (CI). The as-built drawings for the shore-ties will document the Physical Baseline (PBL) of the CI. Changes to this Configuration Standard for electrical shore ties must be approved through a Configuration Control Board (CCB) with input from the Surface Forces Logistic Center (SFLC) using the Engineering Change Proposal (ECP) process. Waivers to this standard must also be approved by the CCB. Inspections will be conducted and documented through Functional Configuration Audits (FCA) and Physical Configuration Audits (PCA) to validate configuration compliance.

3. REFERENCES

A. Naval Engineering Manual, COMDTINST M9000.6 (series)
B. National Electrical Code (NEC), NFPA 70
C. Operation and Maintenance Policy for Shore-To-Ship Power, OPNAVINST 11310.3 (series)
D. Connector Assemblies; Plugs and Receptacles, Electric Power Transfer, Shore to Ship and Ship to Ship, General Specification for, MIL-C-24368
E. Unified Facilities Criteria (UFC) 4-150- 02, Dockside Utilities for Ship Service
F. Unified Facilities Criteria (UFC) 3-560-01, Electrical Safety, Operations & Maintenance,
G. Interface Standard for Shipboard Systems, MIL-STD-1399
H. Naval Ships Technical Manual (NSTM) Chapter 320 – Electric Power Distribution Systems, NAVSEA S9086-KY-STM-010
I. Electric Plant Installation Standard Methods for Surface Ships and Submarines, DOD-STD-2003
J. National Electrical Safety Code (NESC) NFPA 70E

4. REQUIREMENTS

4.A Introduction

The shore facility electrical distribution system that provides shore-tie service to Coast Guard vessels shall be of a standard configuration with specific requirements identified herein for each class of HPC, LPC and SB.

4.B Applicability

4.B.1 The requirements of this section are mandatory for all new designs and retrofit projects. Waivers to deviate from any of these requirements may only be granted by the Configuration Control Board.

4.B.1.a Refer to Appendix (A) for recommended facility shore power design practices. Appendix A provides graphic representation of the standard electrical shore-tie configuration per classification of vessel, but doesn't represent non-standard small boats as they are of various configurations and are not covered.

4.B.1.b Existing facilities that do not meet the requirements of this standard shall be upgraded to meet this standard when replaced or renewed for other reasons.

4.B.1.c System Deficiencies or limitations that are not obvious to the user, such as improper grounding, reduced or increased ampacity shall be listed on a permanently engraved warning plate that is conspicuously located immediately adjacent to the affected shore tie receptacle(s).

4.C Responsibilities

4.C.1 Afloat Units

4.C.1.a Afloat units shall be responsible for furnishing and maintaining shore-tie cables, plugs, and on board shore power equipment.

4.C.1.b Shore tie cables shall be continuous from the shore receptacle to the vessel receptacle without intervening connections, splices, plugs, or receptacles.

4.C.1.c Afloat units shall observe the procedures of Appendix (C) for connecting and disconnecting shore power.

4.C.1.d Afloat units shall promptly report problems with the dockside shore power infrastructure to the cognizant facilities engineering staff in accordance with standardized procedures.

4.C.1.e Afloat units shall notify shore facilities in advance of any testing or energizing of equipment not normally considered hotel loads. This is to ensure the shore power system can accommodate the additional load or whether to utilize shipboard generators, and to consider the cost implications of peak loads during times of high usage.

4.C.1.f Afloat units shall try to maintain balanced loading between phases where practical during shore facility connections, and notify the Facility Engineer of any phase deviations over 10%. Shall also provide additional information if requested.

Afloat units shall provide protections for the shore-tie cables at the railings where the cables go overboard, a saddle cradle with minimum 2' radius is one means of providing protection. Refer to Appendix (C) for further information.

4.C.2 Shore Facilities

4.C.2.a The shore facility shall be responsible for maintaining dockside receptacles and infrastructure, including any transportable isolation transformers (Appendix (D)).

4.C.2.b At publicly accessible waterfronts, shore power receptacles or their associated circuit breakers or disconnect switches shall be locked to prevent unauthorized access. A set of keys shall be provided to FE and ship.

4.C.2.c All shore power receptacles supplied with ungrounded power shall be so labeled and their usage restricted solely to U.S. Government vessels requiring such power.

4.C.2.d For cutters designed without shore power cable stowages, the shore facility shall be responsible for storing such cables in a protected location and transporting them to and from the cutter's mooring.

4.C.2.e Shore facilities shall provide afloat units with advance notice of planned shore power outages or upgrades to the shore power installation.

4.C.2.f Shore facilities shall have designated personnel on duty or call back status to promptly respond to problems with the shore power infrastructure. Afloat units shall be furnished with a procedure or point of contact for requesting technical support.

4.C.2.g Local units shall not alter the design of their shore power infrastructure without the written technical approval of the servicing Civil Engineering Unit. One line electrical distribution and control system wiring diagrams shall be kept on file and maintained to reflect the installed as-built configuration.

4.C.2.h Facility Engineers should monitor the shore power system and be knowledgeable of the "Shore Power Standard Operating Instructions" Appendix C for each classification of ship under his jurisdiction. FE and the ship EO/EPO along with the appropriate CEU shall coordinate to resolve problems that may arise.

4.C.2.i All renovations and new electrical service equipment shall have Arc Flash hazard identification warning labels. Whenever an interior access door is opened or a sheet metal cover is removed from energized shore power equipment, personnel within the arc flash protection boundary shall be qualified per NFPA 70E and properly outfitted with flame retardant clothing and personal protective equipment (PPE).

4.D Technical Requirements

4.D.1 Design

4.D.1.a Shore power infrastructure (up to the dockside receptacles) shall be designed and installed in accordance with the latest edition of NFPA 70, except that circuits intended to supply ungrounded power to vessels shall not be grounded, and shall comply fully with the minimum requirements of Article 250.21(A) and (B).

4.D.1.b Shore power voltage variations during operation of up to ±5% of 450V nominal, typical of most utilities, are permissible. Utilities provide grounded power for customer use with +/-5% voltage variations. To meet the 450V ungrounded delta power requirements for Coast Guard vessels particularly the cutters will require transformation of this service to ungrounded power. Refer to section 4.D.4 for these requirements and Appendix A for further clarification.

4.D.1.c The receptacle(s) serving a single vessel shall be on their own disconnect switch(es) or circuit breaker(s) to allow an afloat unit to disconnect and connect to shore power without affecting other vessels.

4.D.1.d The distance from the main electrical bus afloat to the separately derived service ashore should be minimized to prevent excessive voltage drop.

4.D.1.e Type LSTHOF and LSFHOF cable jackets are too soft for extra hard usage duty and should not be used for replacement shore tie cables; existing cables of these types may continue to be used until no longer serviceable. Shore-tie approved cable types for each vessel, determined by SFLC-ESD-NAME-ESS, are identified as follows: SB - 4.D.5.d.2, LPC - 4.D.6.h.5 and HPC - 4.D.6.i.4.

4.D.1.f Shore power to each cutter shall be separately metered. Individual metering of small boat shore power is not required. Small boats may be metered collectively per CG-4 Energy Program.

4.D.1.g The arc flash hazard associated with each newly installed or retro-fitted switchboard, transformer, and capacitor bank shall be analyzed and posted in a conspicuous location on the exterior of its enclosure in compliance with NFPA 70E and OSHA. Refer to 4.C.2.i.

4.D.1.h Phase rotation for shore power AC systems shall follow the NEC arrangement; for bus and cable connections, A-B-C, from front to back, top to bottom, left to right as viewed from the front of enclosure and for shore-tie receptacle phase rotation, “clockwise”, as viewed from the front of the receptacle. On multiple parallel receptacle installations, each pin location on each receptacle must be connected to the same phase.

4.D.2 Enclosures

4.D.2.a Outdoor enclosures shall be designed to exclude entry of the heaviest rain and wind blown spray expected at the site. Where practicable, locate non-submersible enclosures at elevations above the highest expected tide or storm surge.

4.D.2.b Outdoor enclosures exposed to sunlight shall be designed to resist degradation, both from prolonged exposure to ultraviolet radiation and solar heating. In warm climates, such enclosures shall be colored white or light gray to minimize solar heat absorption.

4.D.2.c Outdoor enclosures adjacent to bodies of salt water shall be of NEMA 4X construction with Type 316 stainless steel exterior hardware. All other outdoor enclosures shall be of NEMA 3R or better rating with exterior hardware treated to resist corrosion. Indoor enclosures may be rated for NEMA 1 if fluid leakage from overhead piping is unlikely.

4.D.2.d Where exposed to freezing weather enclosures shall be designed to retain strength and resistance to impact damage at temperatures as low as -20°C (-4°F).

4. D.2.e When practicable, switchgear should be installed inside a building at an elevation above the 100 year flood level. In areas prone to storm surges from hurricanes or cyclones, outdoor electrical equipment should be installed on a tower or elevated platform above flood level.

4.D.3 Circuit Protection

4.D.3.a Remotely operated circuit breakers shall be of insulated case design with internal electrical operator and spring charging motor, a high current electro-mechanical contactor may also be used as a remotely operated solenoid or motor driven accessories shall not be installed over the operating handles of molded case devices.

4.D.3.b Programmable electronic trip units or over-current relays shall be installed as over-current protective devices in all shore power distribution circuits operating above 250 volts. Thermal-magnetic trip elements may be used in lower voltage shore power distribution systems and shall be rated for 40 degree C ambient.

4.D.3.c One or more relays shall be installed to protect the cutters with three phase power supply from phase loss. Such protective relays shall automatically secure shore power until satisfactory conditions are reestablished.

4.D.3.d Shore power systems shall be equipped with surge protective devices (SPD) to prevent damage to sensitive cutter electronic systems. Such devices shall be designed to clamp line to line voltages to the lowest values recognized by UL Standard 1449 and safely dissipate the maximum expected surge energy without damage. SPDs shall be self-testing to alert maintenance personnel of surge protection failure.

4.D.3.e For ungrounded power systems, the ground detectors required by NFPA 70 Article 250.21 shall be an electronic insulation resistance monitor. This primary function of the monitors is to measure the insulation resistance of the ungrounded shore facility electrical system from the isolation transformer to the shore-tie receptacles, but maybe extended to monitor the vessel electrical system under the conditions noted below. Monitor shall have adjustable pre-alarm and alarm level settings based upon insulation resistance leakage currents. Features are as follows:

4.D.3.e (1) Pre-Alarm: Shall be activated when insulation resistance leakage current exceeds 13 kilohm or 35ma level settings. Visual alarm shall consist of an amber strobe only.

4.D.3.e (2) Alarm/Strobe: Shall be activated when insulation resistance leakage current exceeds 9 kilohm or 40 ma level settings. Auto/visual alarm shall consist of a red strobe light and horn, mounted adjacent to the pre-alarm strobe. The horn shall have a pulse sound distinct from other alarms.

4.D.3.e (3) If either strobe is activated, local personnel (ship or shore) shall immediately notify the facility engineer for the unit.

4.D.3.f The Ground Fault Monitor connected to the system shall operate under the following conditions:

4.D.3.f (1) Condition 1 (Default): Will disconnect from the system whenever a shore-tie receptacle is engaged. Therefore, utilizing the ship ground detection system to monitor both the ship and shore facility systems. This is necessary to avoid conflicts between ground detection systems.

4.D.3.f (2) Condition 2: Monitor may be re-activated manually if ship system is a non-conflicting system. This is an unlikely scenario as there are only a few ships that have this level of monitoring. Note: The alarm levels for the monitor may have to be reset to 100 kilohm (pre-alarm) and 50 kilohm (alarm) per NSTM Chapter 300.

4.D.3.g Only qualified shore facility personnel are authorized to change settings on the monitoring system.

4.D.4 Transformers

4.D.4.a Shore power isolation, step up, or step down transformers shall be located as follows:

4.D.4.a.1 Standard small boats (see section 4.D.5.d below) – Afloat. Refer to 4.D.5.a.

4.D.4.a.2 Non-standard small boats (see section 4.D.5.e below) – Ashore unless the boat already has an onboard transformer installed.

4.D.4.a.3 Cutters (see section 4.D.6.g below) – Ashore.

4.D.4.b Shore power transformers for all vessels shall be equipped with copper windings with 220°C or better insulation and 150°C average temperature rise at full load in a 40°C ambient environment. If located outdoors, the windings shall be varnished using the vacuum-pressure impregnation method and the frame treated to resist corrosion. If subject to salt water submergence 115 degree C epoxy encapsulated dry type transformer shall be used at the waterfront.

4.D.4.c For shore power transformers serving cutters: Each home port cutter shore tie service shall be fed from a dedicated voltage delta-delta isolation transformer with the follow characteristics:

4.D.4.c.1 Voltage adjusting taps on the primary shall be capable of supporting a range adjustment for (2) at 2.5% above normal (FCAN) and four (4) at 2.5% below normal (FCBN). Taps shall be adjusted to deliver the required nominal voltage of (paragraph 4.D.1.b) at the dockside receptacle when tested at 50% of rated load.

4.D.4.c.2 Dual electrostatic shields shall be installed between the primary and secondary windings, as well as between the windings and the core. All shields shall be joined together and bonded to earth ground.

4.D.4.d Shore power transformers are normally of the dry type, typically available in sizes up to 2500 kVA. Oil filled types may be preferable for large services; however, local environmental regulations may prohibit locating such units, even those filled with biodegradable vegetable oil, at sites where tank leakage could drain into navigable waters.

4.D.5 Small Boat Shore Power

4.D.5.a All vessels less than 65 feet in length are classified as small boats. They are identified solely by hull numbers and have no habitability features for the extended support of a permanently assigned crew.

4.D.5.b Shore power plugs shall be equipped with male pins that mate with the female receptacle ashore. Shore power receptacles shall be equipped with a mechanical interlock that blocks insertion and removal of the plug when the receptacle is energized.

4.D.5.c Shore tie cables should be of round cross section with Type STOW, or SOOW construction. Type G cable may be used for applications where an equipment grounding conductor is required. Type SOW cable may be used in applications where it is unlikely that the jacket will be exposed to gasoline, diesel fuel, or other organic solvents. Cables shall have colored jackets (other than standard black) for

better visibility and reduced solar heat absorption. Specific cable type application shall be a determination made by SFLC-ESD-NAME-ESS.

4.D.5.d Standard Small Boats

4.D.5.d.1 Nominal 100 ampere (80 ampere continuous rating), 120 VAC, single-phase, grounded service shall be provided to each standard boat (e.g., 41' UTB, 45'RBM, 47' MLB, and 49' BUSL). The shore tie plug at the dockside end of the shore-tie cable shall be a Russellstoll DS1116MP000 which matches to a Russellstoll DBRS111610000 mechanically interlocked shore tie receptacle enclosure.

4.D.5.d.2 Standard boat shore tie cables should be fabricated from stranded copper, with two power conductors no smaller than #2 AWG (50 kcmil) and one equipment ground no smaller than #8 AWG (23 kcmil). Specific cable type application shall be a determination made by SFLC-ESD-NAME-ESS.

4.D.5.e Non-Standard Small Boats

4.D.5.e.1 Shore power services for non-standard small boats, including barges and landing craft, shall be provided as required to supply the in port loads. For boats not equipped with an on board shore power isolation transformer, such service shall be ungrounded with the same voltage and wiring configuration as the vessel's main AC power distribution system. For all other boats, grounded or ungrounded power shall be provided with the same configuration and voltage as the onboard transformer primary windings.

4.D.5.e.2 Dockside plugs for non-standard small boats requiring 120 VAC single phase shore power service shall mate with standard boat receptacles unless any of the following are true:

4.D.5.e.2(a) A shore power isolation transformer is not installed aboard the boat.

4.D.5.e.2(b) The onboard transformer is smaller than 10 KVA and not protected against overload by an onboard circuit breaker, fusing, or other means.

4.D.5.e.2(c) Not all runs of portable (topside) and internal (up to the onboard shore power circuit breaker) shore tie cable meet the requirements of section 4.D.5.d.2 above.

4.D.5.e.2(d) Non-standard small boat shore tie cables should be fabricated from stranded copper with the appropriate number of conductors and ampacity. Shore tie cables should not contain an equipment grounding conductor unless it connects to the core of the onboard transformer and is insulated from the hull. Specific cable type application shall be a determination made by SFLC-ESD-NAME-ESS.

4.D.5.e.2(e) Non-standard small boats not meeting 4.D.5.e.2 above shall be configured so that they cannot be powered from a standard boat receptacle.

4.D.5.e.2(f) Dockside shore power plugs and receptacles for non-standard small boats are not standardized; however, where several vessels of the same class operate within a geographical area, it may be advantageous to outfit all boats with the same dockside plug and all homeports with the same receptacle.

4.D.6 Cutter Shore Power

4.D.6.a Vessels 65 feet in length and longer are generally classified as cutters, which are further broken down into Low Power Cutters (LPC), Section 4.D.6.h; and High Power Cutters (HPC), section 4.D.6.i. Each cutter has a name as well as a hull number. Cutters are assigned a permanent crew with an Officer

in Charge (OIC) or Commanding Officer (CO). The specific shore-tie technical requirements for each cutter class are available from the SFLC and summarized in Appendix (A).

4.D.6.b See Appendix (B) for a typical shore and cutter power distribution system grounding diagram.

4.D.6.c Shore-tie cables for connection between shipboard and dockside cutter shore-tie receptacles should be of round cross section and should not contain an equipment grounding conductor. Such cables should contain a neutral conductor only when the neutral is needed for proper operation of the shipboard electrical distribution system. Specific cable type application shall be a determination made by SFLC-ESD-NAME-ESS.

4.D.6.d In order to obtain favorable utility rates, shore power systems may be equipped with static or automatic power factor correcting capacitors. Capacitor banks shall be equipped with discharge resistors that automatically reduce plate voltage to less than 50 volts within one minute of deenergization. For services intended for use by cutters with paralleling capability, the system shall be designed to prevent operation with a leading (capacitive) power factor.

4.D.6.e Shore power distribution systems may not contain any component that would permit more than 1 mA of current to flow when a 500 VDC potential is applied between any shore tie phase conductor and earth ground.

4.D.6.f For existing installations with shore power derived from a grounded wye transformer, a temporary transportable isolation transformer (if available), as shown in Appendix (D), shall be used until permanent ungrounded infrastructure is installed.

4.D.6.g Electrical Characteristics

4.D.6.g.1 Ungrounded delta 450 VAC, three-phase, three wire, 60 Hz power shall be the Coast Guard shore-tie standard for cutters operating in salt water or the Great Lakes. This category is further subdivided 4.D.6.i below into low power cutters and high power cutters. The desired hotel voltage as measured at the cutter switchboard with normal in port loads should be 450VAC, therefore the source voltage may be higher than 450VAC. Field adjusted by primary transformer taps per paragraph 4.D.4.c.1. See Appendix (A) drawings A1.1 and A1.3.

4.D.6.g.2 Ungrounded delta 230 VAC, three-phase, three-wire, 60 Hz power shall be the Coast Guard shore-tie standard for river (WLR), inland waterway (WLI), and construction (WLIC) tenders operating predominantly in fresh water. See Appendix (A) drawings A1.2.

4.D.6.h Low Power Cutters (LPC)

4.D.6.h.1 Cutters that require less than 300 amperes of shore power shall be considered low power cutters. Such vessels generally include tugboats (WTGB, WYTL), patrol boats (WPB), craft (WPC) and fast response cutter (FRC).

4.D.6.h.2 Shore power plugs shall be equipped with male pins that mate with the female receptacle ashore. Shore power receptacles shall be equipped with a mechanical interlock that blocks insertion and removal of the plug when the receptacle is energized.

4.D.6.h.3 A Coast Guard hardware standard for electrical shore-ties is appropriate for patrol vessels because of their operational range and their potential for forward deployment. To this end, each patrol vessel mooring shall be equipped with either 100 ampere (non-continuous) or 200 ampere (continuous)

rated mechanically interlocked receptacle(s) with integral circuit breaker(s) or non-automatic switch (es). The mating plug shall be a Russellstoll DS1404MP000 (100 amperes) or DS2404MP000 (200 amperes).

4.D.6.h.4 Where other low power cutters may share moorings with 87 foot patrol boats, the Russellstoll DS1404MP000 plug shall be used. In all other cases, standard hardware shall be used to permit sharing of shore-ties among cutters with similar shore power requirements.

4.D.6.h.5 New shore tie cables for low power cutters should be of three conductor Type SOOW construction. Conductors should be stranded copper and sized no smaller than shown in the table below. Specific cable type application shall be a determination made by SFLC-ESD-NAME-ESS.

Service (A)	**Conductor**	
	AWG	**MCM**
60	#6	23
100	#2	60
200	#000	150

4.D.6.i High Power Cutters (HPC)

4.D.6.i.1 Vessels requiring a shore power service of 300 amperes or more shall be considered high power cutters. Such vessels generally include icebreakers (WAGB, WLBB), National Security Cutters (WMSL), Offshore Patrol Cutters (OPC), high and medium endurance cutters (WHEC, WMEC), training ships (WIX), as well as coastal and sea going buoy tenders (WLM, WLB).

4.D.6.i.2 High power cutters shall be equipped with MIL-C-24368/2 receptacles (also known as Viking, Joy, or NATO type) at both the afloat and ashore connections. Shore receptacles shall be furnished with three individually factory potted SHOF-500 cable pigtails so that the assembly is rated for 500 ampere continuous loading. The number of receptacles located at each mooring shall be commensurate with the expected cutter class(es) to be served.

4.D.6.i.3 Dedicated grounded power for ship repair contractors and industrial maintenance activities shall also be provided and labeled. See referenced directive 1.B.D.

4.D.6.i.4 New shore tie cables for high power cutters should be three conductors 500 MCM enhanced THOF construction with factory vulcanized plugs on both ends. Cutters configured so that continuous shore power cable conductor current cannot exceed 365 amperes may use 400 MCM cable with M24368/4-33 cable size reducers at the plug bus lugs. Specific cable type application shall be a determination made by SFLC-ESD-NAME-ESS.

4.D.6.i.5 Shore power plugs may be the traditional straight type (MIL-C-24368/1) or the recently introduced 45° or 90° angled type manufactured by Cooper Crouse-Hinds. Where the vertical separation between the receptacle and deck or ground is sufficient, an angled plug should be used to reduce the strain on the backshell.

4.D.6.i.6 Existing Type LSTHOF or SOOW shore power cables may continue to be used until no longer serviceable. Field potting of plugs is no longer authorized except for temporary repair of existing cable assemblies due to annular cracking as a result of cable strain. Shore tie cable replacement with factory potted plug shall be a determination made by SFLC-ESD-NAME-ESS.

4.D.6.i.7 Over-current protection and feeder ampacity of each dockside MIL-C-24368/2 receptacle shall be designed for a 400 ampere continuous load capacity. Where multiple receptacles are installed to provide power to a single cutter, consideration needs to be given to providing larger frame circuit breakers, as necessary, to coordinate with cutter circuit breaker trip settings and to protect dockside circuit breakers from catastrophic failure in overload conditions when a single circuit breaker could be exposed to the entire cutter load due to cascading trips of other dockside circuit breakers.

4.D.6.i.8 The MIL-C-24368/2 receptacle cover interlock switch shall be connected so as to de-energize the receptacle whenever the cover is open without a plug installed or an attempt is made to remove an inserted plug.

4.D.6.i.9 Shore power circuit breaker closed and power available indicator lights (high brightness light emitting diode type preferred) and related control switches shall be provided near each receptacle. Cables feeding LED indicators shall be shielded to prevent false indications from induced voltages.

Straight MIL-C-24368/1 plugs, field potted`

Below: Angled plugs, factory vulcanized

5. GLOSSARY

Alphabetized glossary of some of the important terms and definitions used or introduced in this technical order. Refer to National Electrical Code Article 100 for definition of terms not included in this list.

- **Ambient Temperature**: The highest air temperature to which a cable or component is exposed
- **Arc Flash**: An electric current that passes through air when insulation or isolation between electrified conductors is no longer sufficient to withstand the applied voltage.
- **AWG**: American Wire Gage – A wire diameter specification. Increasing the gauge value decreases the wire size.
- **Berth**: A specific, marked-off length, along a pier or wharf, containing ships services appropriate for the ship classes which may be assigned to it.
- **Bollard**: A single-post fitting to which mooring lines from vessels are attached.
- **Cold Iron**: Used to describe the condition of a ship when all shipboard boilers, engines, and generators are inoperative during repairs and can furnish none of the required ships services.
- **Conductor size**: The cross sectional area of electrical wire, normally expressed as American Wire Gauge (AWG) or thousands of circular mils (kcmil).
- **Demand Factor**: The ratio of the maximum loads, averaged for a period of minutes, to the total connect load on the cable.
- **Double banking**: Installation of two rows of cable within a cable hangar tier.
- **FCAN**: Primary transformer tap indicating “Full Capacity Above Normal” voltage.
- **FCBN**: Primary transformer tap indicating “Full Capacity Below Normal: voltage.
- **Floating**: A circuit which has no connection to ground.
- **Hotel Service (Load):** Dockside utilities provided for a ship at berth (also called services, utility services, and cold iron services).
- **Insulation Resistance**: Characteristic of an insulating material that being subject to voltage indicates a resistance such that the value of leakage current which flows through it stays within acceptable limits.
- **Insulation Monitoring Device**: Monitors the ungrounded AC system between an active phase conductor and earth. It is intended to sound an alert (audio/visual) or disconnect the power supply when the impedance between two conductors drops below a set value.
- **Information Plate**: A label listing the equipment manufacturer, model number, and key design data.
- **Label Plate**: A label identifying the function of the equipment and its unit number (if two or more units with similar function are installed.)
- **Nesting**: When a second vessel berths outboard of existing vessel at the single pier berth.
- **Mechanical Interlock**: A physical action which directly de-energizes a circuit or enables a circuit as a safeguard. Mil-C-24368 receptacle comes with a mechanical plug below the

receptacle which activates a micro switch (DPDT) when the cover is closed or plug fully inserted. It is also used with an interlock switch/receptacle assembly used of SB or LPC which de-energizes circuit for insertion of shore tie plug or removal of same.

- **Percent Voltage drop**: The difference in voltage between any two points in a circuit, expressed as a percentage of the rated voltage at the power source (switchboard bus or transformer secondary.
- **Reactive**: The component of an AC voltage, current, or impedance that is 90 degree out of phase with the “real” or in phase component. Reactive components are associated with capacitive or inductive circuits.
- **Resultant load current**: The product of the total connected load current and a demand factor applicable to the total connected load.
- **Power Mounds**: A single enclosure which houses the shore tie receptacles for a vessel which includes power and telecommunication and industrial receptacles for a berth.
- **Tag**: A label bearing identification or data pertinent to the item to which it is attached.
- **Total connected load current**: The vectorial sum of the identification plate or rated currents of a connected loads and the specified spare (growth) current allowance.

APPENDIX A
RECOMMENDED SHORE POWER DESIGN PRACTICES

A.1 General

A.1.1 Objective

This appendix provides recommended design practices based upon mandatory requirements of section 4 and lessons learned. They are to be utilized in the development of electrical shore power systems to service SB, HPC and LPC class Coast Guard vessels. Compliance with the statements containing the word “shall” is mandatory unless a deviation is approved by the CCB.

A.1.2 Drawings

A.1.2.1 Attached drawings provide clarification of the elements of a shore tie installation and will be referenced throughout this appendix. They include the minimum recommended configurations as well as examples of existing installations that comply with this document.

A.1.2.1.1 Vessel Electrical Characteristic: Drawings A1.1, A1.2 and A1.3 provides tables listing LPC and HPC vessels per voltage (paragraph 4.D.6.g) and by hull number, with reference to the associated one line diagrams herein.

A.1.2.1.2 Standard Small Boats (SB): Drawing A2 is the one line diagram with different enclosure options based upon the Russellstoll “mechanically interlocked” receptacle enclosures and associated plugs which is the standard for these boats.

A.1.2.1.3 Low Power Cutters (LPC) 450V, 3Ø: Drawing A3 represents the Russellstoll “mechanically interlocked" receptacle enclosure and associated plug for 200A and 100A circuits. Drawing A4 is based upon the proposed installation at BSU Miami which utilizes a fabricated power mound enclosure that will service 2-153’ FRC’s and one 87’ WPB per berth, and includes telecommunication plus industrial outlets.

A.1.2.1.4 Low Power Cutter (LPC) 230/240V, 3Ø: Drawing A5 represents the Russellstoll “mechanically interlocked" receptacle enclosure and associated plug for 200A and 100A circuits.

A.1.2.1.5 High Power Cutters (HPC) 450V, 3Ø: Drawings A6-A8 represents single and multiple Mil-C-24368/2 receptacle combinations.

A.1.2.1.6 Shore tie component: Drawing A10 – A12 provides information on the Mil-C-24368 NATO receptacle, shore tie cable assembly options, and DLO cable characteristics, respectively.

A.1.3 Equipment Standards

Unless reusing existing Government owned materials, all electrical cable, conduit, and components shall be new and constructed in accordance with nationally and internationally recognized industrial electrical equipment manufacturing standards. Such standards are issued by Underwriters Laboratories (UL), the National Fire Protection Association (NFPA), the National Electrical Manufacturers Association (NEMA), the American National Standards Institute (ANSI), the Institute of Electrical and Electronic Engineers (IEEE), and the International Electrotechnical Commission (IEC).

A.1.4 Site Conditions

A.1.4.1 Geographic locations of Coast Guard facilities vary; therefore, differing site conditions need to be considered in the design process. Climatic conditions effect the type of loads a ship utilizes while tied up to the pier. Pier arrangements and configuration along with the type of home ported and visiting vessels and whether nesting of vessel occurs shall be considered in the layout of the shore tie installation.

A.1.5 Utility Service

A.1.5.1 It is extremely important to verify that the source transformer has achieved the required grounding impedance by testing with a fall-of-potential meter. UFC-4-150-02 requires a ground system at piers, wharves, and other waterfront structures that measure not more than five (5) ohms. If the ground impedance is not within these parameters then additional ground electrodes will need to be added. All ground systems shall be tied together and tested for compliance with UFC-4-150-02.

A.1.6 Accessibility

A.1.6.1 Clearances shall be provided in the immediate vicinity of electrical equipment (NEC Article 110) and machinery to permit complete accessibility for operation, maintenance, repairs, renewal of fuses, and testing.

A.1.6.2 Dockside receptacles shall be arranged so that shore tie plugs can be connected and disconnected without a significant risk of falling overboard. Cables connected to such receptacles should not block access to dockside utility service pits or pass over steam piping. Adequate space for cable slack, not subject to vehicular traffic, shall also be provided

A.1.7 Human Factor

A.1.7.1 The design of new systems and equipment shall conform to the capabilities and limitations of the operator to run and maintain the equipment. Accordingly, design-induced workload, accuracy, time constraints, mental processing, and communications requirements shall not exceed the operator's capabilities. Design shall also foster effective procedures, work patterns, and personnel safety, while minimizing factors that degrade human performance.

A.1.7.2 Commercial off the shelf (COTS) equipment need not be modified solely to improve the operator interface. Whenever practicable, however, new instrumentation and controls designs shall incorporate the human engineering principles of MIL-HDBK-759

A.2 Equipment

A.2.1 Location

A.2.1.1 Electrical equipment shall be located and/or of construction and coating system to provide maximum protection from vehicle impacts, storm surge, flooding, and windblown or floating debris.

A.2.1.2 Electrical equipment susceptible to vehicle impacts shall be protected by 6 inch diameter concrete filled RGS bollard spaced at 3 foot intervals. Such bollards should project 5 feet above ground and be set into a 24 inch diameter concrete base to a depth of at least 6 feet. If the equipment is to be located on the pier the post shall be welded to a 12" square steel plate anchored to the concrete or steel pier deck. Bollards shall be painted bright yellow with optional black striping or provided with a commercial manufactured identification cover assembly

A.2.2 Enclosure

A.2.2.1 Equipment enclosures shall be designed and fabricated such that the internal components will perform their intended function satisfactorily in the environment to which the enclosure is exposed. Enclosures for electrical equipment shall be in accordance with NEMA or IEC standards. Paint coating system must meet the minimum requirements of IEEE C57.12.29 unless noted otherwise herein.

A.2.2.2 Equipment enclosure exposed to the weather should be fabricated from inherently corrosion resistant materials, such as stainless steel, brass, bronze, or fiberglass. Aluminum or steel, whether coated or not, typically degrade rapidly as a result of corrosion and are not recommended in salt water locations.

A.2.2.3 Watertight stuffing tubes and terminal boxes of MIL-T-24558 design, rated for 15 feet of water submersion (NEMA 6P), are recommended for all exposed connection box applications, particularly those subject to flooding.

A.2.2.4 Enclosure options for the small boats and low power cutters are identified in one line diagrams on drawings A2 and A3 respectively.

A.2.1.5 Examples of enclosures for the multiple outlets are shown in drawings A4.1, A4.2, A9.1 and A9.2. and are also addressed below.

A.2.3 Power Mound

A.2.3.1 Power mounds are single enclosures which house all shore tie power and telecommunication receptacles, and pier industrial receptacles. Where more than one vessel is being nested outboard at a pier berth, consolidation of all outlets in a single enclosure shall be provided to reduce foot print on the pier. Refer to drawings A4 and A9 as examples of such enclosures. Industrial power receptacle requirements vary and shall be determined for each site and require separate service transformers from ship power. Refer to the 64-CSTO-M2000.3-08 “C4&IT SHORE TIE” for the telecommunication standards.

A.2.3.1.1Power Mound Indicator lights: (Refer to drawings A4.2 and A9.2).

A.2.3.1.1 (1) RED indicator light with the associated pushbutton located above the receptacle indicates circuit closed and energized.

A.2.3.1.1 (2) GREEN indicator light with the associated pushbutton located above the receptacle indicates circuit open and de-energized.

A.2.3.2 Examples of Power Mound Enclosures: (Fabricated Enclosures)

A.2.3.2.1 LPC: Drawings A4.1 and A4.2 display a multiple outlet enclosure for Russellstoll receptacles proposed for the BSU Miami installation, which includes telecommunication and industrial receptacles. These particular drawings addresses the nesting of two 153’ FRC (two 200A receptacles each) and one 87’ WPB (one 200A receptacle) at one pier berth.

A.2.3.2.2 HPC: Drawings A9.1 and A9.2 display a multiple Mil-C-24368/2 receptacle power mound utilized for the 418’ NSC (WMSL) installation at BSU Alameda which includes telecommunication and industrial receptacles.

A.2.3.3 Maintenance: Hazardous voltages in electrical equipment can cause severe personal injury or death. Inspection and maintenance should only be performed on this equipment after power has been

turned off, disconnected, and electrically isolated so that no accidental contact can be made with energized parts. Installation, operation, and maintenance should be conducted only by qualified personnel.

A.2.3.3 (1) Inspect the unit once each year, or after any severe short circuit

A.2.3.3 (2) If there is an accumulation of dust and dirt, clean out the unit by using a brush, vacuum cleaner, or clean lint-free rags. Avoid blowing dust into circuit breakers or other components. Do not use a flower or compressed air.

A.2.3.3 (3) Carefully inspect al visible electrical joints and terminals in the fus and wiring system. Check and re-tighten all accessible electrical connections to the manufacturer's torque specifications. If such information is not provided with the equipment or included in the operational and maintenance manuals, consult with local CEU project construction manager.

A.2.3.3 (4) Carefully inspect all receptacles. Remove any dust and/or dirt by wiping out with a clean lint free rag. Inspect for any cracks or breakage. If any are found replace the component. Inspect the pins and/or contact sleeves. Look for signs of heating (discoloration) or arching (pitting). If any are found, replace the receptacle.

A.2.3.3 (5) Check that all receptacle covers properly close and seal against the face of the receptacle.

A.2.3.3 (6) Visually check all conductors and connections to be certain that they are clean and secure. Loose and/or contaminated connections increase electrical resistance which can cause overheating. Such overheating is indicated by discoloration or flaking of insulation and/or metal parts. Pitting or melting of connecting surfaces is a sign of arcing due to a loose or otherwise poor connection. Parts which show evidence of overheating or looseness should be cleaned and re-torqued or replaced if damaged. Tighten bolts and nuts at bus joints to manufacturer's torque specifications.

A.2.3.3 (7) Examine any circuit breaker surfaces for the presence of dust, dirt, soot, grease, or moisture. If such contamination is found, the surfaces should be cleaned.

A.2.3.3 (8) Examine any circuit breakers molded case for cracks. The integrity of the molded case is important in withstanding the stresses imposed during short circuit interruptions. Breaks should be replaced if cracks are found.

A.2.3.3 (9) Operate each switch or circuit breaker several times to ensure that all mechanisms are free and in proper working order. Replace as required.

A.2.3.3 (10) Do not oil or grease parts of molded case circuit breakers.

A.2.3.3 (11) Exercise switch operating mechanism and external operators for circuit breakers to determine that they operate freely to their full on and off positions.

A.2.3.3 (12) Check the integrity of all electrical and mechanical interlocks and padlocking mechanism.

A.2.4 Transformers

A.2.4.1 Shore Power Isolation Transformer: Refer to appropriate attached one line diagrams drawings for the minimum size transformer for a particular Cutter class as noted in paragraph A.1.2 above.

A.2.4.1.1 Locating a new transformers in a separate structure or available electrical equipment room is preferred, but typically these are not available in a location close to where the shore tie outlets are required. For transformers that must be located outdoors, marine duty units with epoxy varnish are recommended. White epoxy coated stainless steel is preferred. Wye-connected, buck-boost, zig-zag, and autotransformers shall not be used.

A.2.4.2 Control Transformers

A.2.4.2.1 The control voltage for new equipment shall be at a potential of either 24 or 120 VAC. For vital equipment that can operate from a battery power source, ungrounded 24 VDC control power is also acceptable.

A.2.4.2.2 Minimize the length of unprotected transformer lead wiring. Each ungrounded primary and secondary transformer winding lead shall be fused.

A.2.4.2.3 The control power transformer power rating shall be sufficient to operate all components that may be simultaneously energized.

A.2.4.3 Instrumentation Transformers

A.2.4.3.1 Current Transformer shall be equipped with metal oxide varistors (MOVs) or other protective device to limit secondary winding open circuit voltage in the event that a current loop connection is broken, and shall be permanently attached to non-current carrying structure and not tied off to bus bars or other conductors.

A.2.4.3.2 Potential Transformer shall have one secondary winding lead of each potential transformer shall be grounded to earth. Minimize the length of unprotected transformer lead wiring. Each ungrounded primary and secondary transformer winding lead shall be fused.

A.2.5 Shore-Tie Cable and Receptacle Assemblies

A.2.5.1 SB and LPC: Shore-tie cables are provided with shipboard side plug to be determined by SFLC and the shore side plug will match the standard receptacle “mechanical interlock” assembly established for that particular vessel. Refer to drawings A2 and A3.

A.2.5.2 HPC: Refer to drawing A11. All shore-tie cable assemblies should be factory potted for all MIL-C-24368 plugs and field potting shall be performed only in situations of emergency, then only to be replaced with a factory potted connections as soon as possible. Field potting doesn’t have the consistency of quality as factory connections as noted in the photo at the end of section 4. Photo shows that the potting material is separating from the cable which will allow water into the plug. See paragraph 4.D.6.i.4 above for new shore-tie cables.

A.2.5.2.1 Figures 2E15 and 2E16 of DOD-STD-2003-2 provide standard methods for assembling and potting MIL-C-24368 plugs and receptacles in the field. Method 2E15 is primarily intended for existing cable assemblies in serviceable condition where an old straight plug is to be cut off and renewed.

A.2.5.2.2 Angled plugs must be factory vulcanized and can only be replaced in the field with the straight type.

A.2.5.2.3 Drawing A11 presents the 45 degree and 90 degree plugs that are now available from Cooper Crouse-Hinds. The use of the angled plugs should be considered for shore tie cable assemblies to reduce

stress on the plug on the ship and shore. This will reduce field potting and cable replacements. Refer to paragraph 4.D.6.i.5 and photograph at the end of section 4 as an example of the result of cable weight on straight plug potting.

A.2.5.3 Shore-tie receptacles

A.2.5.3.1 HPC: New MIL-C-24368/2 receptacles should normally be ordered as factory vulcanized assemblies with 10 foot long pigtails for connection to feeder cables inside the power mound with compression type butt connectors. Refer to drawing A10 table for potted and unspotted receptacle combinations or ordering information. Method 2E16 (A.2.5.2.1) is primarily intended for situations where it is not practicable to connect such pigtails or wait for delivery of a new factory vulcanized receptacle assembly.

A.2.5.3.2 Potting compound for field assembled plugs and receptacles shall be Stycast 2741 resin mixed with Catalyst 15 in a 2:1 ratio by weight, both manufactured by Emerson and Cuming (acquired by Henkel International). A kit is available under NSN 5970-00-109-4611.

A.2.6 Instrumentation

A.2.6.1 Switches shall operate crisply so that the switch position is unambiguous to the operator. The function of each switch and all switch positions shall be clearly labeled

A.2.6.2 Acceptable switch types include rotary, pushbutton, and lever actuated cam. Slide and push-on/push-off switches shall not be used

A.2.6.3 Switches in high traffic areas that could be inadvertently operated by contact with passing personnel shall be equipped with guards or other protection. Such protection shall not obscure the visibility of the switch position

A.2.6.4 Switches and indicators that will be continuously exposed to weather shall be of the NEMA 4X or 6 type operable with a single gloved hand. When such a switch must be operable under freezing conditions, the switch enclosure shall be equipped with an anti-icing heater and thermostat.

A.2.6.5 Experience has shown that unprotected NEMA 4X pushbutton switches often leak when continuously exposed to heavy weather. Such switches shall normally be protected with a cover plate or outer housing to deflect rain and spray when not in use. When such protection is not feasible or would impede access to the controls, each pushbutton switch shall be equipped with a supplemental rubber boot

A2.6.6 Indicators may be of the single or double incandescent bulb type, although low maintenance, high brightness light emitting diode (LED) type is preferred. Control wiring for LED circuits shall have individually shielded conductors. Indicator bulb voltage shall be no greater than 120 volts. A step down transformer (AC) or resistors (DC) may be used to reduce input voltage.

A.2.7 Circuit Protection

A.2.7.1 Ground Fault Protection

A.2.7.1.1 A ground fault circuit interrupter (GFCI) is a device intended for the protection of personnel that functions to de-energize a circuit or portion thereof within an established period of time when a current to ground exceeds approximately 5 mA.

A.2.7.1.2 Ground fault protection shall be provided for any new general purpose 120 VAC receptacle outlets installed along the waterfront. Standard receptacles shall be labeled as GFCI protected.

A.2.7.2 Overcurrent Protection

A.2.7.2.1 Circuit breakers are the preferred overcurrent protective device (OCPD). New fused power and lighting circuits may be installed only in existing fuse panels.

A.2.7.2.2 When the sum of 125% of the continuous load plus 100% of the non-continuous load of a new or modified circuit is expected to exceed the OCPD rating, the OCPD must be specially rated for long term operation at 100% of its rating. Alternatively, the next largest fuse or circuit breaker trip rating, if permissible for the specific application, may be used or the load split among two or more circuits.

A.2.7.2.3 Because of the low impedance of many delta-delta isolation transformers, magnetizing currents can exceed the trip setting of circuit breakers set at no more than 125% of rated load. Consequently, overcurrent protection is generally required on both the primary and secondary windings, even when the conditions of Article 450 of NFPA 70 for no secondary overcurrent protection can be satisfied.

A.2.7.3 Circuit Breakers

A.2.7.3.1 Except for three-phase four-wire systems where the use of four pole circuit breakers is not practicable, all phase conductors in a circuit shall be switched by a circuit breaker pole. In four-wire systems, the neutral conductor may be unswitched.

A.2.7.3.2 Circuit breaker parts which are susceptible to the growth of fungus shall be varnished. Linen, cellulose, untreated wood, jute, leather, cork, paper, cardboard, organic fiberboard, and organic felt or products containing these materials shall be considered fungus nutrients.

A.2.7.3.3 For small boats where single phase power is required and a two pole breakers is installed the second pole shall not be used and shall be labeled as such.

A.2.8 Fasteners

A.2.8.1 The strength, elasticity, conductivity, corrosion-resistance, thermal stability, galling susceptibility, fatigue life, and magnetic properties of fastener materials shall be suitable for the application and expected operating environment. The base metal and any plating on fasteners exposed to the weather should be fabricated from materials that are inherently resistant to corrosion.

A.2.8.2 Male threads on fasteners, when installed and tightened, shall protrude a distance of at least one, but not more than five, thread lengths beyond the top of the nut or plastic locking ring. Washers shall not be used for the sole purpose of lessening thread protrusion.

A.2.8.3 Threaded fasteners shall be selected and assembled to resist loosening from thermal cycling. Unless impracticable, fasteners shall conform to national standards and shall not require special tools for assembly or disassembly.

A.2.8.4 The torque of threaded connections at bus bar joints, terminal studs, equipment mounts, couplings, and other critical attachments shall be verified in the presence of the Coast Guard Inspector with a calibrated torque wrench. When torque values are not specified in the work item or applicable technical documentation, follow the manufacturer’s recommendations or industry standards to ensure a

tight connection. Nuts shall be torqued to the requirements of the manufacturer. Utilize a lock nut with Bellevue compression washer.

A.2.9 Raceway and Conductors

A.2.9.1 Conduit and Cable Trays

A.2.9.1.1 Conduit run underneath piers and wharves shall be adequately supported and braced to prevent rupture as a result of seismic motion, impacts from floating debris, and storm surge or flooding. Conduit support structures shall be capable of resisting gravity loads as well as buoyant forces. Conduit and Trays shall be supported with stainless steel hardware.

A.2.9.1.2 Non-Metallic Raceway (Preferred)

A.2.9.1.2.a Epoxy fiberglass conduit (RTRC) (minimum ¼ inch wall thickness) or epoxy fiberglass cable trays shall be used underneath piers and wharves. Cable trays shall be used where protection or elevation avoids impact from debris etc. as noted above. U.S. Navy is currently underway to replace their metallic raceway systems under all piers with RTRC.

A.2.9.1.2.b Above pier shall be either RTRC or PVC schedule 80.

A.2.9.1.2.c PVC schedule 40 shall not be used on the pier.

A.2.9.1.2.d For installations with large numbers of heavy cables, non-metallic epoxy fiberglass cable trays are recommended under piers where protected from floating debris. Type 316 stainless steel may also be used, but is much heavier. Trays shall be supported with stainless steel hardware.

A.2.9.1.3 Metallic Raceway (Optional)

A.2.9.1.3.a PVC coated RGS (urethane interior coating) conduit, Marine grade aluminum or type 316 stainless steel cable trays can be used underneath piers or wharves. Certain design considerations should be weighted before using either system as follows:

A.2.9.1.3.b PVC coated RGS conduits should be properly tied into the earth electrode ground system for the pier. RGS conduit will corrode in marine environments and can experience significant induced current and should be carefully considered. Consider oversizing conduit to accommodate conductor bundling to minimize induction per NEC. Example: At BSU Alaska wharf, 4” RGS was reused to service a 225’ WLB and 38.6 amps were measured on the conduits during heavy loading conditions.

A.2.9.1.3.c Marine grade aluminum or type 316 stainless steel cable trays maybe used but all shore-tie feeder conductors shall be bundled per NEC to reduce induction.

A.2.9.1.3.d Installation of PVC coated RGS shall be installed by contractors with minimum 5 years experience. Continued maintenance and inspection of system is necessary to insure couplings and connections retain integrity and avoid corrosion.

A.2.9.1.4 RGS, RMC, EMT shall not be used on the waterfront areas.

A.2.9.2 Conductors

A.2.9.2.1 Multiple conductor control cables to power mounds from switchgear shall be shielded. Cables that run through vaults or under piers or wharves shall be designed for submergence.

A.2.9.2.2 For services exceeding 400 amperes, 535 MCM single conductor Type DLO (diesel locomotive) cable is recommended because of its flexibility and resistance to moisture. Each conduit should contain exactly one conductor of each phase. For cable trays, single conductor cables should be

tightly banded into triplexed phase bundles. To prevent inductive heating, unbundled single conductor cables shall not encircle ferromagnetic material. Refer to drawing A12 for cable information and termination hardware to be used with this conductor. Larger sizes of DLO may be required for long runs based on an allowable voltage drop at full rated load.

A.2.9.2.3 Double banking or parallel stacking of power cables is not recommended

A.2.9.3 Terminations

A.2.9.3.1 Cables shall terminate on bus bars and circuit breakers with silver-plated compression type ring terminals, applied using the manufacturer recommended crimper and die. Anti rotation clips shall be used with single hole type lugs to prevent possible short circuiting with nearby conductors. Provide stud adapters on circuit breakers for landing lugs.

A.2.9.3.2 Compression lugs for Type DLO and other finely stranded cable shall be specifically designed for such conductors. Utilize oxide inhibiter on cable prior to compression of lug and sleeve heat shrink over barrel of lug and at least 3” over conductor jacket.

A.2.9.3.3 Terminations utilizing Allen screws or mechanical clamps shall not be used

A.2.10 Ground Detection System

A.2.10.1 The two systems currently in use in the field are the Bender Model IRDH375 (preferred) and the Cutler-Hammer Model D64L2 which both monitor insulation resistance of ungrounded systems (“IT” systems (Isolated Terra)). Both systems should function as indicated in section 4 paragraph 4.D.3.g.

A.2.10.2 The Bender system is based upon settings in Kohms. Two separately adjustable alarm relays allow it to distinguish between pre-alarm and alarm conditions. If the insulation resistance between conductors falls below the set response value, the alarm relays switch and the alarm LEDs light up. The Bender monitor is automatically disconnected from the system whenever the ship connects into the power mound receptacle. Auxiliary contacts on the individual circuit breakers for the receptacle are wired in parallel to the monitor. Refer to drawing A8.3 for the wiring diagram used at BSU Alameda for the power mounds to serve the NSC. For the Bender system set the pre-alarm at 50Kohm and alarm at 10Kohms.

A.2.10.3 The Cutler-Hammer system is based upon settings in milliamperes. Any one of three leakage current limits: 20milliamps, 35milliaamp or; 50milliamps RMS can be selected on a front accessible DIP switch array. Two single turn potentiometers permit the pre-alarm level and the alarm level to be 20% - 80% of the selected maximum leakage current limit of the D64L2. Any leakage current above the pre-alarm level will activate the pre-alarm relay and light the yellow pre-alarm LED. Should the leakage current rise above the alarm level the alarm relay and red alarm LED will activate. For the Cutler Hammer monitor set the leakage current limit at 50ma and set the pre-alarm at 20% of 50ma or 10ma and the alarm at 70% of 50ma or 35ma.

A.2.10.4 The monitor also has the capability to be manually turned on after it is automatically shut off. Most ships utilize a passive system that doesn’t interact with the active systems of the Bender and Cutler-Hammer units and thus can be turned back on. The Bender system is more sophisticated than the Cutler Hammer system and can provide better diagnostics for trouble shooting. As noted in section 4 paragraph 4.D.3.g the settings of the unit may have to be readjusted.

A.3 INSTALLATION

A.3.1 Electrical Equipment Installation

A.3.1.1 Prior to installation and in the presence of the Coast Guard Inspector, all new electrical equipment shall be subjected to a careful examination to determine whether the equipment or its insulation has been cut, bruised, or otherwise damaged as a result of handling or storage, whether any small parts have been bent, broken, or lost, or whether the equipment has been damaged by weather, dirt, moisture, lubricating oil, or other deleterious substances. Correct all such deficiencies.

A.3.1.2 Installation instructions

A.3.1.2 (1) Care should be exercised to ensure that the types and temperature ratings of conductors being installed in the unit are suitable for use with the terminals provided.

A.3.1.2 (2) Use care in stripping insulation from conductors so as not to nick any of the conductors.

A.3.1.2 (3) Check and tighten all accessible electrical connections to the manufacturer's torque specifications.

A.3.1.2 (4) Manually exercise all switches, circuit breakers, and other operating mechanisms to make certain they operate freely.

A.3.1.2 (5) Check to determine that all grounding connections are properly made.

A.3.1.2 (6) To make sure that the system is free from short circuits and ground faults, conduct an insulation test phase to ground and phase to phase with the switches or circuit breakers in both the open and closed positions. If the resistance reads less than 1 megohm while testing with the branch circuit devices in the open position, the system may be unsafe and should be investigated and corrections made. Some electronic equipment (metering, TVSS, etc.) may be damaged by this testing. Refer to the manufacturer's equipment markings for guidelines. Refer to additional insulation testing information below.

A.3.1.2 (7) Clean the enclosure of all foreign materials. If parts at connection points are spattered with cement, plaster, paint, or other foreign material, remove the foreign materials with great care to avoid damage to the connections.

A.3.1.2 (8) Set any adjustable time current trip device settings to the proper values.

A.3.1.2 (9) Install covers, closed doors, and make certain that no conductors are pinched and that all enclosure parts are properly aligned and tightened.

A.3.1.3 Install new stainless steel banding and rubber channels on new and disturbed cable trays in accordance with Section 4 of DOD-STD-2003. Nylon self-locking ties are not an acceptable substitute for cable banding and shall not be used because they can chafe cable jackets and conductor insulation.

A.3.1.4 Perform an insulation resistance test of each new cable in accordance with Section 0below upon completion of banding and prior to connection.

A.3.1.5 Install new cable identification tags. Color code power conductors and install printed wire markers on instrumentation and control leads. Conductor and cable identifiers shall be consistent with the installation drawing. Ensure that lugs are tightly crimped to leads and are of the correct size and type.

A.3.1.6 Connect each cable in accordance with the installation drawings. Torque all electrical connections. Test each new circuit for continuity.

A.3.1.7 Prime and paint all new and disturbed surfaces.

A.3.1.8 Perform all applicable acceptance testing per Section A.3.2 below.

A.3.2 Acceptance Testing

A.3.2.1 Test Performance – All acceptance tests shall be performed in the presence of the Coast Guard Inspector. Provide a written report to the Coast Guard Inspector of all test results within one week of test completion.

A.3.2.2 Conductor Resistance Test – Perform a conductor resistance test of any paralleled power conductors to ensure that load current will divide evenly during operation.

A.3.2.3 Insulation Resistance Test

A.3.2.3.1 Accomplish insulation resistance tests of all new and disturbed electric cables, transformers, lighting fixtures, and heaters using a direct current megohmmeter (Megger®). Test voltage shall be as shown in Table 300-14 below. Do not test systems with voltage sensitive electronics unless such components are disconnected or completely isolated by a disconnect switch or removed fuses. Temperature corrects all insulation resistance readings to 25°C using the nomograph below. Record meter reading, winding temperature, and corrected insulation resistance for each measurement taken. The following formula can be used as a cross check on the nomograph temperature correction:

$$R_{25} = R_T \, 10^{0.0305(T-25)}$$

where R_{25} is the corrected insulation resistance
R_T is the uncorrected insulation resistance
T is the winding temperature (°C)

Insulation Resistance Test Voltages

Operating Voltage (VDC or VAC)	Test Voltage (VDC)
24-50	50 to 100
51-150	100 or 150
151-250	250
251-500	500
501-1000	1000
1001-2500	2000 or 2500

2501-13700	5000

A.3.2.3.2 The minimum acceptance readings of conductors to ground and between conductors shall be as shown in the table below. When only cable insulation resistance is being measured (no load or control equipment in the circuit under test), the resistivity shall be greater than the value shown in the table below for the cable temperature. Resistivity is calculated by multiplying the effective conductor length under test by the measured resistance, uncorrected for temperature. Effective length is computed by adding the length of all conductors to which test voltage is applied during the insulation resistance measurement.

Minimum Acceptable Insulation Resistance

Circuit	**Total Resistance (MΩ)**	**Resistivity (MΩ-ft)**		
		40ºF	**70ºF**	**140ºF**
Lighting	0.5	5500	920	95
Power	1.0	5500	920	95
Instrumentation & Control	1.0	5500	920	95
Audio & Telephone	0.05	2200	380	40

A.3.2.4 Direction of Rotation Test – Perform a direction of rotation test on each new and disturbed three-phase circuit.

A.3.2.5 Operability Test – Cycle each new component to verify operability.

A.3.2.6 Clearance Check – For newly installed equipment, open all doors and remove covers to verify adequate servicing access and interference free operation. Similarly, verify that access to existing nearby equipment is not adversely affected by a new installation.

A.3.2.7 Operational Test – Verify proper operation of the components or systems affected by the invoking work item. During this testing, run the equipment through its full range of capabilities in all configurations and operating modes.

A.3.2.8 Enclosure Tightness Tests – Perform a water leakage test of each new, plugged, or disturbed outdoor penetration and closure in accordance with the following:

A.3.2.9 The water hose nozzle shall be no less than ½ inch in diameter and the pressure at the nozzle shall be at least 50 psig.

A.3.2.10 Prior to testing, conduct a survey to assure that appropriate steps and precautions have been taken to prevent damage caused by spillage or spray of fluids on components and equipment adjacent to the test area.

A.3.2.11 Hold the nozzle within 10 feet of the structure under test and direct the water stream in the manner most likely to reveal leakage. The acceptance criteria for the water hose test shall be no evidence of water on the opposite side of the tested structure.

A.3.2.12 Electrical system acceptance Test: Shall be accomplished at the power mounds. A resistive/reactive load bank shall be used.

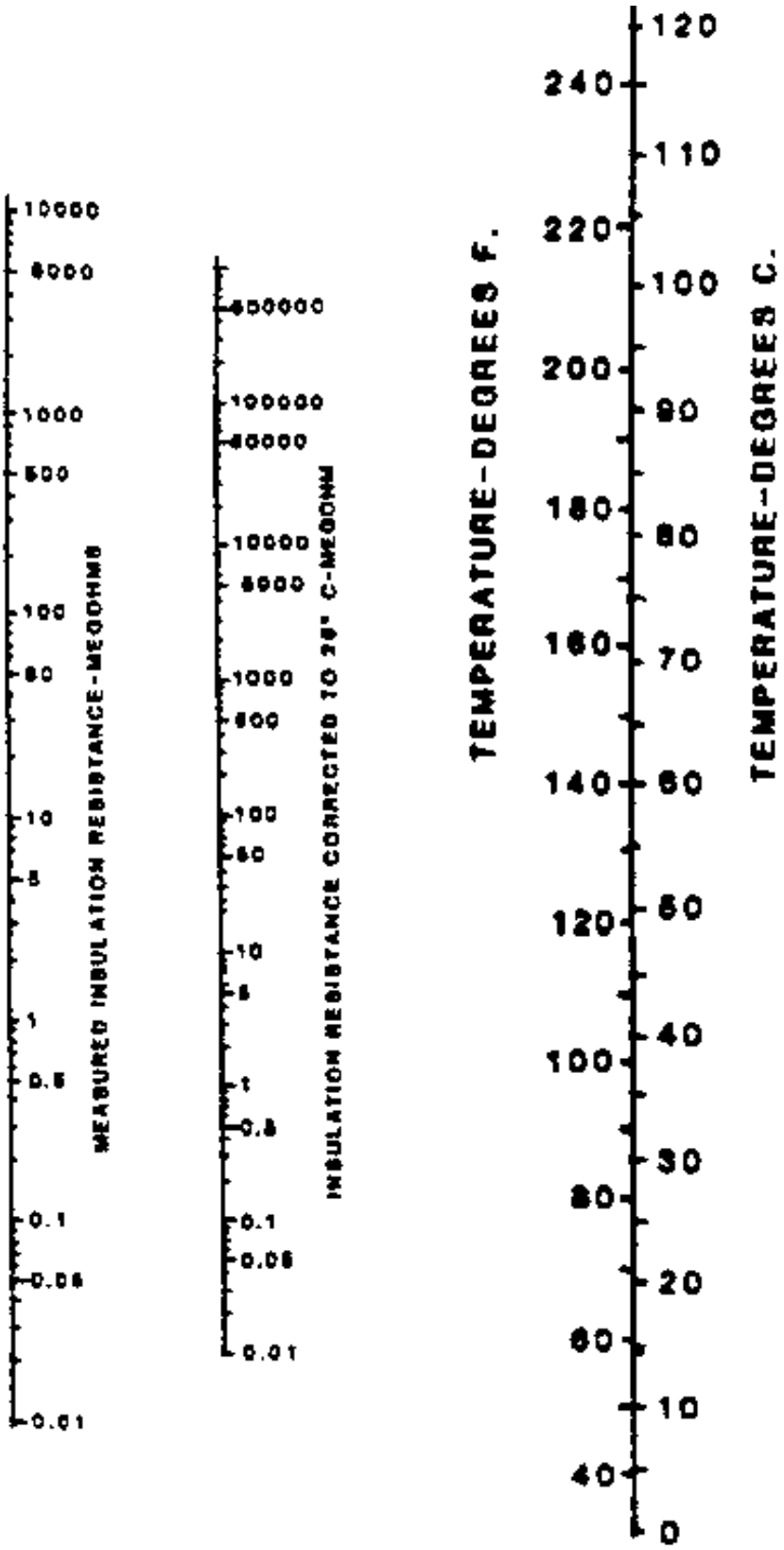

Insulation Resistance Temperature Correction Nomograph

A.4 COMPONENT RESOURCES

Isolation transformers

- Dry Type: Tierney Electrical MFG. Co, Seattle, Washington. Contact: Jim Stasak (206) 767-3554, www.tierneytransformer.com.
- Olsun Electrics Corporation, Richmond, Illinois. (815) 678-2421, Contact Jeff Jachowicz (815) 678-1532, www.olsun.com.
- Oil filled Type: Cooper Power Systems: Contact: Tittle & Associates, Inc. (907) 562-5663.

Insulation Resistance Monitors

- Bender Incorporated: Contact: Joe Boardman (800) 356-4266
- Cutler-Hammer: Contact: Mike Magin (858) 663-3982

Enclosure Fabricators

- ESL Power Systems, Inc., Corona, California, (951) 739-7020, (800) 922-4188, Fax (951) 739-7048. Contact Tom Tzinchuk, tzinchuk@eslpwr.com
- Beck Electric Supply, Seattle, Washington, (206) 763-2011. Contact Kevin Roundtree, kroundtree@beckelectric.com

Circuit Breakers Square D, ABB, GE, Cutler-Hammer.

Portable Transformer Trailers

- U.S.C.G Shipyard: Engineering Division, Ronald Schelhouse, CAD Manager at 410-636-7968. Manufacturer of 400KVA and 750KVA units for the Buoy Tenders.
- BSU Kodiak: Al Boudreau, 907-487-5320 ext 231 for information on 150KVA thru 750 KVA units.

LOW POWER CUTTER (LPC)

VESSEL				SHIP SHORE POWER					DOCKSIDE SHORE POWER		
L	TYPE	DESCRIPTION	HULL NUMBER	VAC NOM.	PH	WIRE QTY	CIRCUIT AMPS	CIRCUIT QTY	RECEPT. AMP	REF. DWG .	NOTES
65	WLI	INLAND BUOY TENDER	65400, 65401	450	3	3	60	1	60	A3	1, 2, 4
65	WYTL	SMALL HARBOR TUG	65604 65607 - 65612 65614, 65615	450	3	3	60	1	60	A3	1, 2
75	WLR	RIVER BUOY TENDER	75307	450	3	3	100	1	100	A3	1, 2
75	WLIC	INLAND CONSTRUCTION TENDER	75301 - 75306 75309, 75310	450	3	3	200	1	200	A3	1, 2
87	WPB	MARINE PROTECTOR CLASS COASTAL PATROL BOAT	87313 - 87374	450	3	3	100	1	100	A3	1, 2
87	WPB	MARINE PROTECTOR CLASS COASTAL PATROL BOAT	87301 - 87312	450	3	3	100	2	100	A3	1, 2
100	WLIC	INLAND CONSTRUCTION TENDER	315	450	3	3	150	1	150	A3	1, 2
100	WLI	INLAND BUOY TENDERS	313	480	3	3	60	1	60	A3	1, 2
100	WLI	INLAND BUOY TENDERS	642	450	3	3	100	1	200	A3	1, 2
110	WPB	PATROL BOAT	1301, 1302, 1304 1307, 1309 - 1314 1316, 1318 - 1324 1326, 1327, 1329 -1349	450	3	3	200	1	200	A3	1, 2
120	BARGE	BARGE	12001, 12002	450	3	3	200	1	200	A3	1, 2
140	WTGB	ICE BREAKING TUG	101- 109	450	3	3	200	1	200	A3	1, 2
153	WPB	FAST RESPONSE CUTTER	FRC-01,02,03	450	3	3	200	2	200	A3	1, 2, 3
160	WLIC	INLAND CONSTRUCTION TENDER	800 - 803	450	3	3	200	1	200	A3	1, 2

LEGEND:

L	LENGTH IN FEET	DWG	DRAWING	AMP	AMPERAGE
NOM.	NOMINAL	PH	# OF PHASES		

NOTES:
1. CUTTERS LISTED COMPLY WITH PARAGRAPH 4.D.6.g.1.
2. ENCLOSURES ARE MECHANICALLY INTERLOCKED CIRCUIT BREAKER TYPE
3. NEW ASSET. START DELIVERY IN 2011. HULL NUMBER DESIGNATION MAY CHANGE.
4. HULL 65400 HAS A 30KVA ISOLATION TRANSFORMER ONBOARD AND HULL 65401A 45KVA TRANSFORMER ONBOARD.

DRAWING	SHEET TITLE			
A1.1	LOW POWER CUTTER (LPC), 450V, 3PH ELECTRICAL CHARACTERISTICS	4		
		3		
		2		
		1		
		JLM	02-04-11	CSTO Appendicies (A) – Original Issue
		REV	DATE	DESCRIPTION

LOW POWER CUTTER (LPC)

VESSEL				SHIP SHORE POWER					DOCKSIDE SHORE POWER		
L	TYPE	DESCRIPTION	HULL NUMBER	VAC NOM.	PH	WIRE QTY	CIRCUIT AMPS	CIRCUIT QTY	RECEPT. AMP	REF. DWG	NOTES
65	WLR	RIVER BUOY TENDER	65501- 65506	230	3	3	150	1	200	A5	1
75	WLR	RIVER BUOY TENDER	75401 - 75405, 75407, 75408	230	3	3	100	1	100	A5	1
75	WLR	RIVER BUOY TENDER	75409, 75406	230	3	3	175	1	200	A5	1
75	WLR	RIVER BUOY TENDER	75407, 75500, 75501	230	3	3	200	1	200	A5	1,2

LEGEND:

L	LENGTH IN FEET	DWG	DRAWING	AMP	AMPERAGE
NOM.	NOMINAL	PH	# OF PHASES		

NOTES:

1. COMPLIES WITH PARAGRAPH 4.D.6.g.2
2. HULLS 75500 AND 75501 HAVE 1:1 SHIPBOARD ISOLATION TRANSFORMER.

DRAWING	SHEET TITLE			
A1.2	LOW POWER CUTTER (LPC), 230V, 3PH ELECTRICAL.CHARACTERISTICS	5	MM-DD-YY	DESCRIPTION 5
		4	MM-DD-YY	DESCRIPTION 4
		3	MM-DD-YY	DESCRIPTION 3
		2	MM-DD-YY	DESCRIPTION 2
		JLM	02-04-11	CSTO Appendicies (A) – Original issue
		REV	DATE	DESCRIPTION

HIGH POWER CUTTER (HPC)

VESSEL				SHIP SHORE POWER					DOCKSIDE SHORE POWER			
			HULL	VAC	PH	WIRE	CIRCUIT		RECEPTACLE.		REF.	
L	TYPE	DESCRIPTION	NUMBERS	NOM.		QTY	AMPS	QTY	AMP	QTY	DWG	NOTES
175	WLM	BUOY TENDERS - COASTAL	551 - 564	450	3	3	400	1	400	1	A6	1, 2
210	WMEC	MEDIUM ENDURANCE CUTTERS	615 - 630	450	3	3	400	1	400	1	A6	1
225	WLB	BUOY TENDERS - SEAGOING	201 - 216	450	3	3	400	2	400	2	A7	1, 2
240	WLBB	SEAGOING TENDER/ICE BREAKER	30	450	3	3	400	3	400	3	A8	1
270	WMEC	MEDIUM ENDURANCE CUTTERS	901 -913	450	3	3	400	2	400	2	A7	1
295	WIX	TRAINING SHIP	327	450	3	3	300	1	400	1	A6	1
378	WHEC	HIGH ENDURANCE CUTTERS	715 - 726	450	3	3	400	2	400	2	A7	1
399	WAGB	ICE BREAKERS - POLAR CLASS	10 -11	450	3	3	290	4	400	4	A8	1
418	WMSL	NATIONAL SECURITY CUTTER	750 - 753	450	3	3	400	7	400	7	A8	1
420	WAGB	ICE BREAKERS	20	450	3	3	400	8	400	8	A8	1

LEGEND:

L	LENGTH IN FEET	DWG	DRAWING	AMP	AMPERAGE
NOM.	NOMINAL	PH	# OF PHASES		

NOTES:
1. DOCKSIDE SHORE POWER ARE USUALLY MOUNTED WITHIN A POWER MOUND ENCLOSURE WITH QUANTITY OF MIL-C-24368 RECEPTACLES RATED AT 400A CONTINUOUS.
2. UTILIZE THE TRANSPORTABLE TRANSFORMERS PER APPENDIX D
3. COMPLY WITH PARAGRAPH 4.D.6.g.1.

DRAWING	SHEET TITLE			
A1.3	HIGH POWER CUTTER (HPC), 450V, 3PH ELECTRICAL CHARACTERISTICS	4		
		3		
		2		
		1		
		JLM	02-04-11	CSTO Appendicies (A) – Original Issue
		REV	DATE	DESCRIPTION

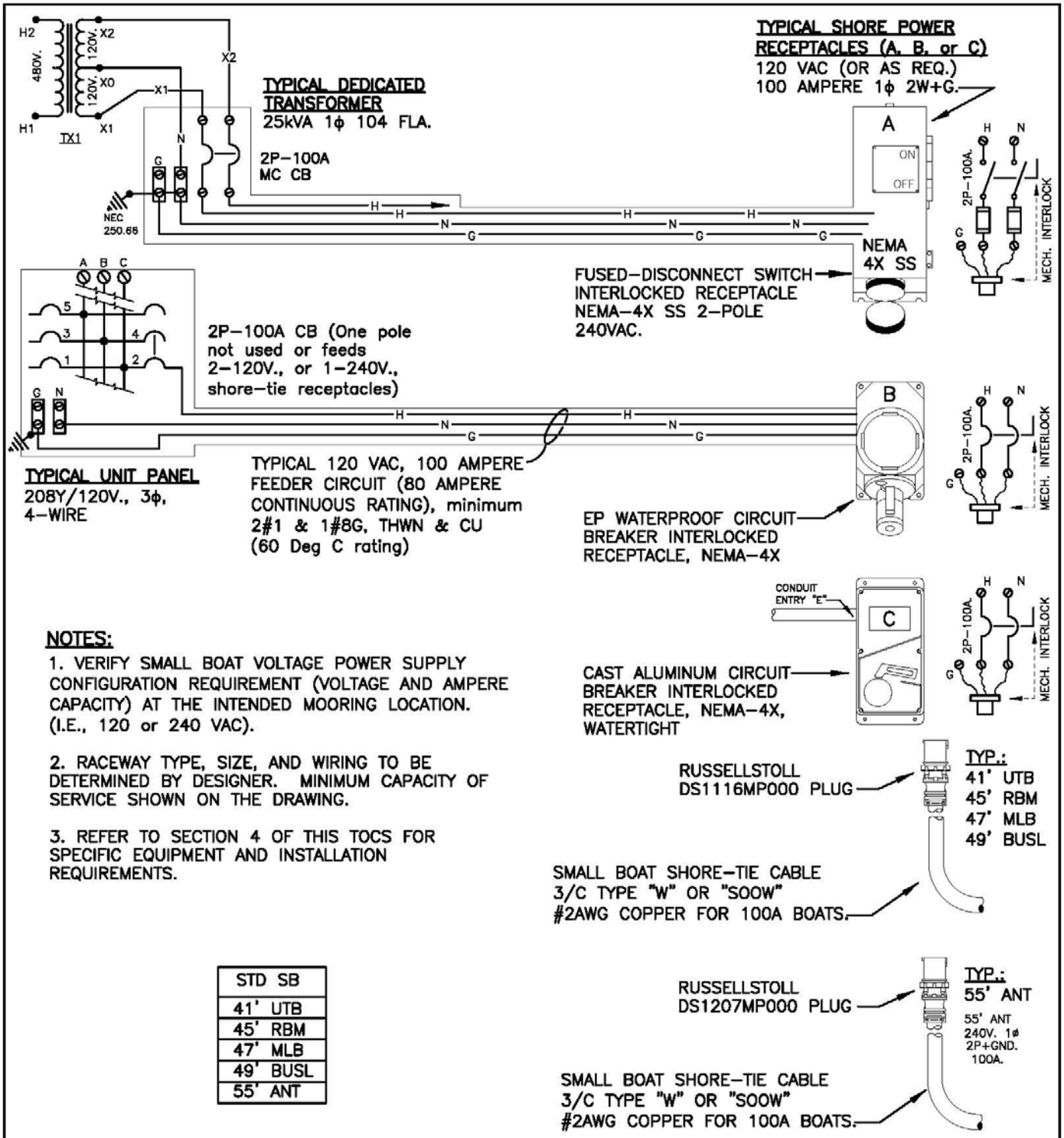

NOTES:

1. VERIFY SMALL BOAT VOLTAGE POWER SUPPLY CONFIGURATION REQUIREMENT (VOLTAGE AND AMPERE CAPACITY) AT THE INTENDED MOORING LOCATION. (I.E., 120 or 240 VAC).

2. RACEWAY TYPE, SIZE, AND WIRING TO BE DETERMINED BY DESIGNER. MINIMUM CAPACITY OF SERVICE SHOWN ON THE DRAWING.

3. REFER TO SECTION 4 OF THIS TOCS FOR SPECIFIC EQUIPMENT AND INSTALLATION REQUIREMENTS.

STD SB
41' UTB
45' RBM
47' MLB
49' BUSL
55' ANT

RECOMMENDED SHORE POWER DESIGN PRACTICES

DRAWING	SHEET TITLE			
A2	SMALL BOAT SHORE POWER ONE LINE DIAGRAM	4		
		3		
		2		
		1		
		DAR	01-31-11	CSTO Appendicies (A) - Original Issue
		REV	DATE	DESCRIPTION

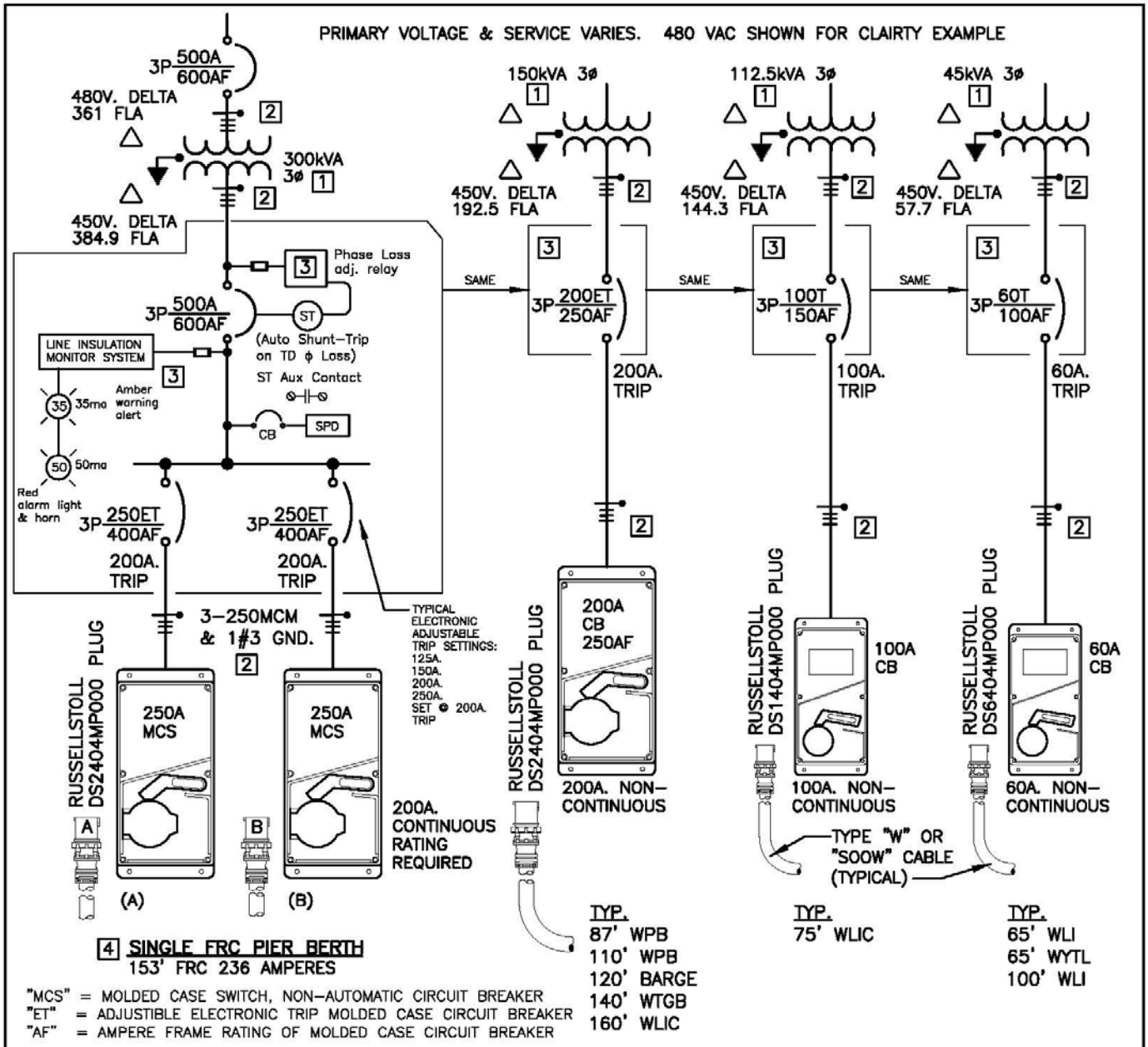

NOTES:

1. SHIPS SERVICE VOLTAGE ISOLATION TRANSFORMER. REFER TO SECTION 4 OF THIS CSTO FOR FURTHER TECHNICAL REQUIREMENTS. ACTUAL KVA SIZE SHALL BE SUFFICIENT FOR CUTTER TYPE & LOCATION.

2. RACEWAY TYPE, SIZE, AND WIRING TO BE DETERMINED BY THE DESIGNER. MINIMUM CAPACITY OF SERVICE SHOWN ON DRAWING.

3. ELECTRONIC INSULATION RESISTANCE MONITOR: REFER TO SECTION 4 OF THIS CSTO FOR SPECIFIC REQUIREMENTS. INCLUDE A HIGH-SPEED, HIGH POWER SPD SHIPS-SERVICE UNGROUNDED DELTA SURGE PROTECTION DEVICE, AND CIRCUIT BREAKER TRIP ON PHASE-LOSS AFTER ADJUSTABLE TIME DELAY PROTECTION SCHEME.

4. THIS CONFIGURATION UTILIZES RUSSELLSTOLL MAXGARD INTERLOCKED ENCLOSURE.

RECOMMENDED SHORE POWER DESIGN PRACTICES

DRAWING	SHEET TITLE	REV	DATE	DESCRIPTION
A3	LOW POWER CUTTERS, 450V, 3PH ONE LINE DIAGRAMS	4		
		3		
		2		
		1		
		DAR	01-31-11	CSTO Appendicies (A) - Origional Issue

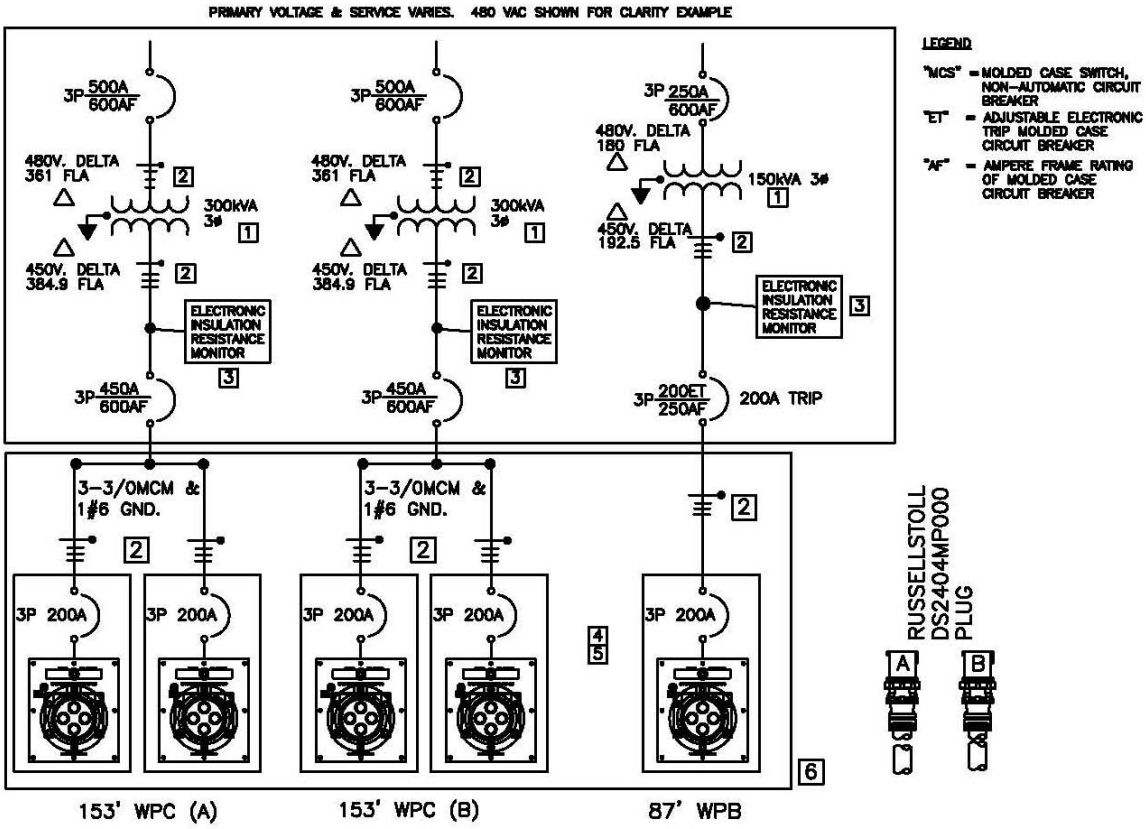

ONE LINE DIAGRAM– BSU MIAMI (ST3–ST6)

TYP.:
87' WPB
153' FRC

NOTES:

1. SHIPS SERVICE VOLTAGE ISOLATION TRANSFORMER. REFER TO SECTION 4 OF THIS CSTO FOR FURTHER TECHNICAL REQUIREMENTS. ACTUAL KVA SIZE SHALL BE SUFFICIENT FOR CUTTER TYPE & LOCATION.
2. RACEWAY TYPE, SIZE, AND WIRING TO BE DETERMINED BY THE DESIGNER. MINIMUM CAPACITY OF SERVICE SHOWN ON DRAWING.
3. ELECTRONIC INSULATION RESISTANCE MONITOR REFER TO SECTION 4 OF THIS CSTO FOR SPECIFIC REQUIREMENTS. INCLUDE A HIGH–SPEED, HIGH POWER TVSS SHIPS–SERVICE PROTECTION DEVICE, AND LOW VOLTAGE, PHASE–LOSS, & VOLTAGE IMBALANCE PROTECTION SCHEME.
4. POWER MOUND SHALL BE FABRICATED TO INCORPORATE TWO SETS OF 200A RECEPTACLES TO ACCOMMODATE NESTING OF TWO HOME PORTED 153' FRCs AND 1 87' WPB (THIS SITE ONLY). REFER TO DRAWING A4.1 AND A4.2 FOR ENCLOSURE DETAILS FABRICATED BY ESL.
5. 200A, 100% RATED CIRCUIT BREAKERS, 480V ESL SAFETY INTERLOCKED MODULE WITH RUSSELLSTOLL DF2404FR000 RECEPTACLE (5X) (MATES W/DS2404MP000 MALE PLUG) BY ESL (800) 922–4188.
6. POWER MOUND WAS FABRICATED BY ESL POWER SYSTEMS, INC. REFER TO DRAWINGS 4.1 AND 4.2 FOR ACTUAL ENCLOSURE DESIGN FOR ST3 THRU ST6 BASED UPON BSU MIAMI REQUIREMENTS. INDUSTRIAL OUTLETS AND COMMUNICATION OUTLET PER BSU MIAMI REQUIREMENTS. THE POWER TO SERVICE TWO FRC'S AND ONE 87' WPB NESTED OUT FROM ONE MOORING BERTH.

RECOMMENDED SHORE POWER DESIGN PRACTICE –EXAMPLE

DRAWING	SHEET TITLE	REV	DATE	DESCRIPTION
A4	FRC–ONE LINE DIAGRAM BSU MIAMI	5	MM–DD–YY	–
		4	MM–DD–YY	–
		3	MM–DD–YY	–
		2	MM–DD–YY	–
		1	02–04–11	CSTO Appendicies A – Original Issue

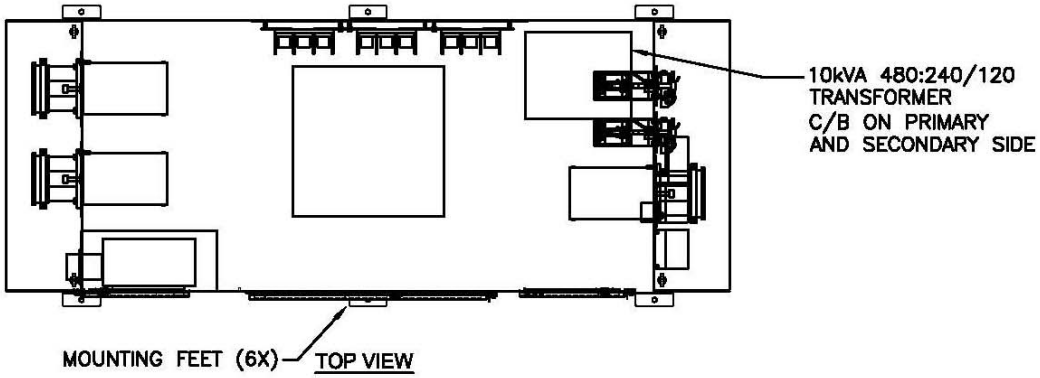

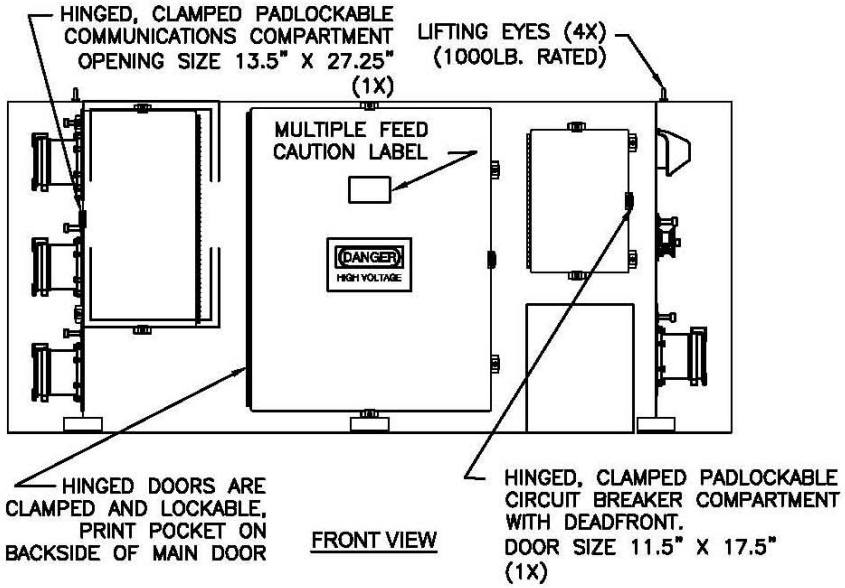

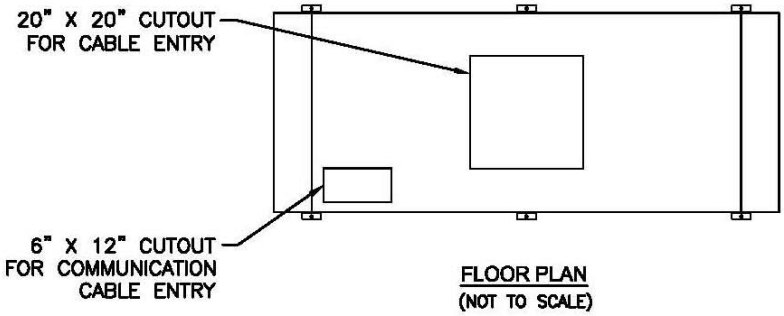

NOTES:
1. ENCLOSURE SHALL BE TYPE 3R, 12 GAUGE STAINLESS STEEL CONSTRUCTION.
2. ENCLOSURE SHALL BE POWDERCOATED SERIES W49. COLOR SHALL BE WHITE.
3. ENCLOSURE WAS DESIGNED AND FABRICATED BY ESL POWER SYSTEMS, INC, CORONA CALIFORNIA. REFER TO PARAGRAPH A.4 FOR CONTACT INFORMATION.
4. THIS POWER MOUND IS AN EXAMPLE OF COMBINED SHORE–TIE POWER, INDUSTRIAL AND COMMUNICATION OUTLETS IN ONE ENCLOSURE.

DRAWING	SHEET TITLE	REV	DATE	DESCRIPTION
A4.1	FRC– POWER MOUND . ENCLOSURE: BSU MIAMI	5	MM–DD–YY	–
		4	MM–DD–YY	–
		3	MM–DD–YY	–
		2	MM–DD–YY	–
		1	02–04–11	CSTO Appendicies A – Original Issue

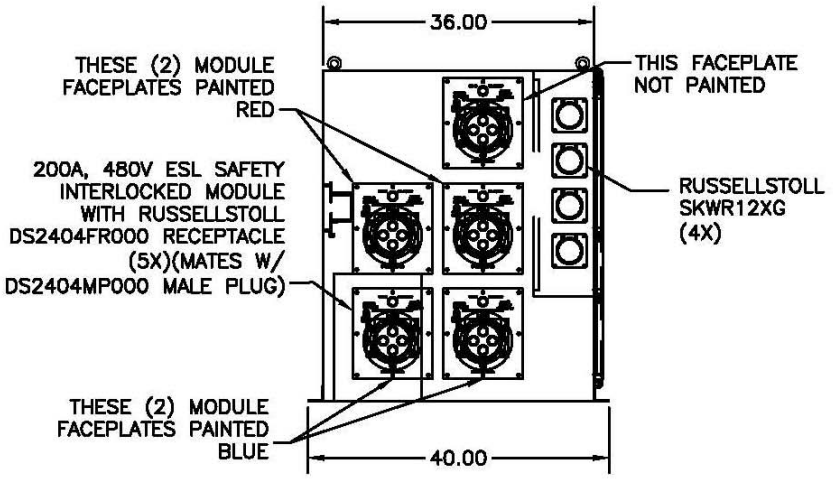

LEFT SIDE VIEW

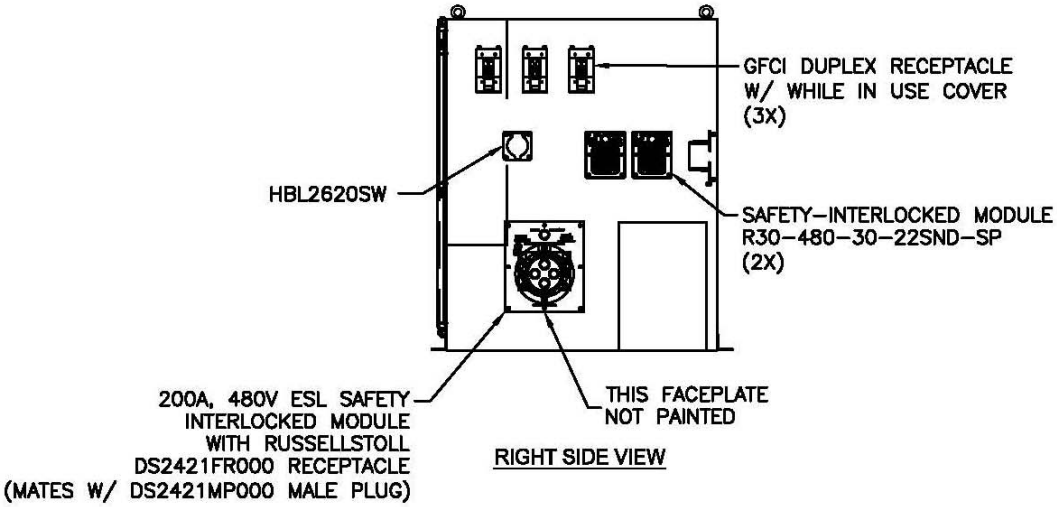

RIGHT SIDE VIEW

NOTES:
1. ENCLOSURE SHALL BE TYPE 3R, 12 GAUGE STAINLESS STEEL CONSTRUCTION.
2. ENCLOSURE SHALL BE POWDERCOATED SERIES W49. COLOR SHALL BE WHITE.
3. ENCLOSURE WAS DESIGNED AND FABRICATED BY ESL POWER SYSTEMS, INC, CORONA CALIFORNIA. REFER TO PARAGRAPH A.4 FOR CONTACT INFORMATION.

DRAWING	SHEET TITLE	REV	DATE	DESCRIPTION
A4.2	FRC – POWER MOUND ENCLOSURE: BSU MIAMI	5	–	–
		4	–	–
		3	–	–
		2	–	–
		1	02-04-11	CSTO Appendicies A – Original Issue

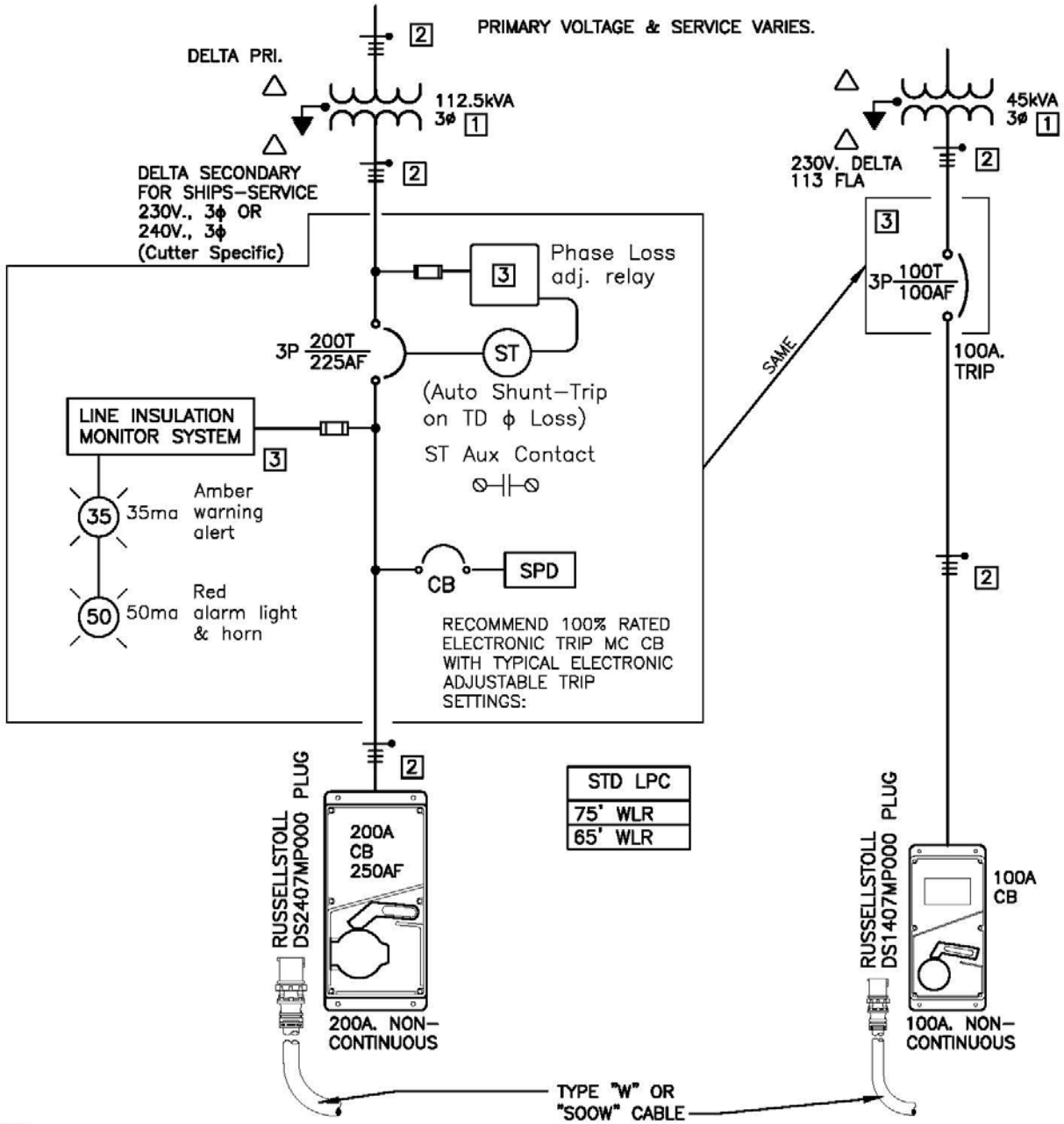

NOTES:

1. SHIPS SERVICE VOLTAGE ISOLATION TRANSFORMER. REFER TO SECTION 4 OF THIS CSTO FOR FURTHER TECHNICAL REQUIREMENTS. ACTUAL KVA SIZE SHALL BE SUFFICIENT FOR CUTTER TYPE & LOCATION. NOTE: 75-WLR-F SERIES ARE EQUIPPED WITH ON BOARD 1:1 112.5kVA 230V., DELTA-DELTA VOLTAGE ISOLATION TRANSFORMERS.

2. RACEWAY TYPE, SIZE, AND WIRING TO BE DETERMINED BY THE DESIGNER.

3. ELECTRONIC INSULATION RESISTANCE MONITOR: REFER TO SECTION 4 OF THIS CSTO FOR SPECIFIC REQUIREMENTS. INCLUDE A HIGH-SPEED, HIGH POWER SPD SHIPS-SERVICE UNGROUNDED DELTA SURGE PROTECTION DEVICE, AND CIRCUIT BREAKER TRIP ON PHASE-LOSS AFTER ADJUSTABLE TIME DELAY PROTECTION SCHEME.

4. THIS CONFIGURATION UTILIZES RUSSELLSTOLL MAXGARD INTERLOCKED ENCLOSURE.

RECOMMENDED SHORE POWER DESIGN PRACTICES

DRAWING	SHEET TITLE	REV	DATE	DESCRIPTION
A5	LOW POWER CUTTERS, 230/240V., 3PH ONE LINE DIAGRAM	4		
		3		
		2		
		1		
		DAR	01/31/11	CSTO Appendicies (A) - Original Issue

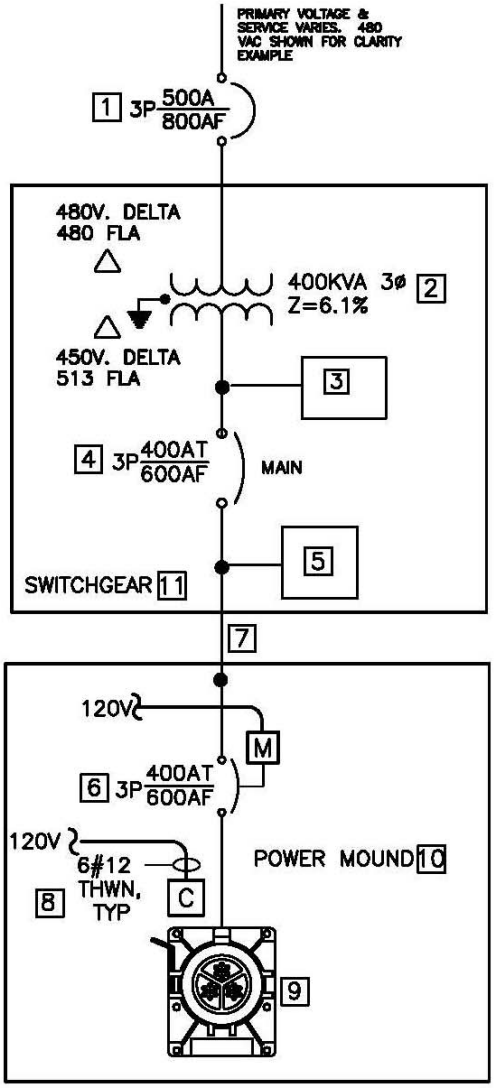

ONE LINE DIAGRAM

HPC
175' WLM
210' WMEC
295' WIX

ONE LINE NOTES

1. SIZES OF COMPONENTS BASED UPON 400A SERVICE.

2. REFER TO SECTION FOUR OF THIS CSTO FOR THE TECHNICAL INFORMATION ON THE REQUIRED EQUIPMENT IDENTIFIED.

3. RECEPTACLE DISCONNECT CAN BE ELECTRICALLY OR MANUALLY OPERATED. DESIGNER TO DETERMINE METHOD. IF MECHANICAL RECOMMEND UTILIZING ES; MODULE TYPE INTERLOCK CONFIGURATION FOR MIL-C.

4. REFER TO DRAWING A8.2 FOR TYPICAL PUSHBUTTON CONTROLS TO BE PROVIDED FOR EACH MIL-C-24368/2 RECEPTACLE IN A POWER MOUND ENCLOSURE. REFER TO DWG A9 FOR STANDARD MIL-C MICROSWITCH ASSEMBLY.

EQUIPMENT ITEMS:

1 MOLDED CASE CIRCUIT BREAKER [REQUIRED]

2 ISOLATION TRANSFORMER -SHIELDED PRIMARY, SECONDARY AND CORE [REQUIRED]

3 ELECTRONIC INSULATION RESISTANCE MONITOR [REQUIRED]

4 INSULATED CASE CIRCUIT BREAKER: WITH ELECTRONIC TRIP. [REQUIRED]

5 SOLID STATE MULTIFUNCTION METER AND CIRCUIT MONITOR. (SQUARD D CM-4000T OR APPROVED EQUAL.) [REQUIRED]

6 MOLDED CASE CIRCUIT BREAKER: [REQUIRED] SEE NOTE 3 ABOVE

7 FEEDER CONDUCTORS: DLO TYPE CABLE RECOMMENDED. REFER TO DWG D1.

8 POWER MOUND CONTROLS. MINIMUM WIRING PER MIL-C USE SHIELDED CABLE IF LED INDICATOR LIGHTING SPECIFIED. [REQUIRED] REFER TO DWG. A8.3.

9 Mil-C-24368/2 RECEPTACLE. [REQUIRED]

10 POWER MOUND ENCLOSURE: CONSOLIDATE TELCOM IN ENCLOSURE. REFER TO C4&IT CSTO. [REQUIRED]

11 SWITCHGEAR

RECOMMENDED SHORE POWER DESIGN PRACTICE

DRAWING	SHEET TITLE	REV	DATE	DESCRIPTION
A6	ONE LINE DIAGRAM-HPC ONE MIL-C RECEPTACLE	5	MM-DD-YY	-
		4	MM-DD-YY	-
		3	MM-DD-YY	-
		2	MM-DD-YY	-
		JLM	02-07-11	CSTO Appendices (A) - Original Issue

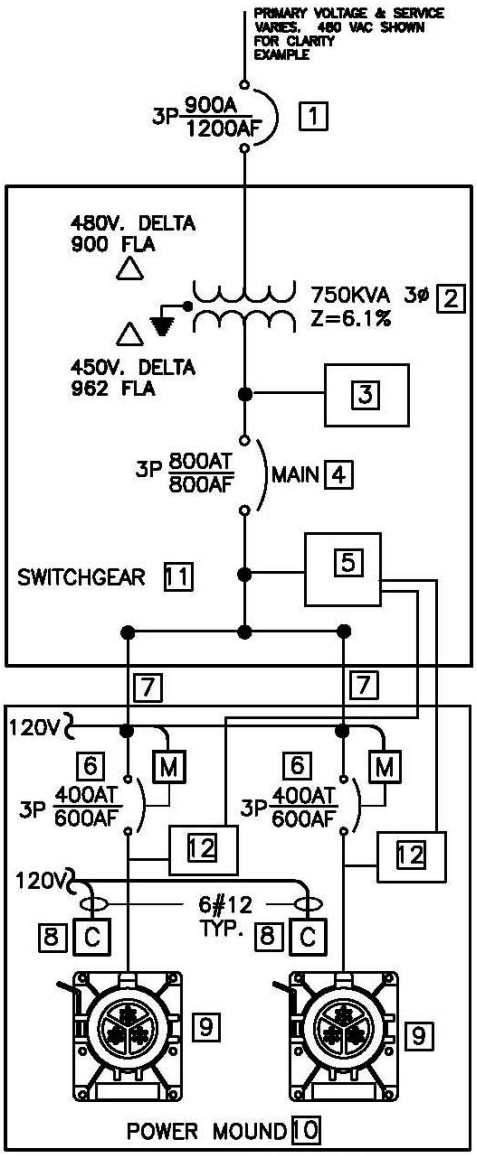

ONE LINE DIAGRAM

ONE LINE NOTES

1. SIZES OF COMPONENTS BASED UPON 800A SERVICE.

2. REFER TO SECTION FOUR OF THIS CSTO FOR THE TECHNICAL INFORMATION ON THE REQUIRED EQUIPMENT IDENTIFIED.

3. RECEPTACLE DISCONNECT CAN BE ELECTRICALLY OR MANUALLY OPERATED. DESIGNER TO DETERMINE METHOD. IF MECHANICAL RECOMMEND UTILIZING ES; MODULE TYPE INTERLOCK CONFIGURATION FOR MIL-C.

4. REFER TO DRAWING A8.2 FOR TYPICAL PUSHBUTTON CONTROLS TO BE PROVIDED FOR EACH MIL-C-24368/2 RECEPTACLE IN A POWER MOUND ENCLOSURE. REFER TO DWG A9 FOR STANDARD MIL-C MICROSWITCH ASSEMBLY.

EQUIPMENT ITEMS:

1 MOLDED CASE CIRCUIT BREAKER [REQUIRED]

2 ISOLATION TRANSFORMER-SHIELD PRIMARY, SECONDARY AND CORE. [REQUIRED]

3 ELECTRONIC INSULATION RESISTANCE MONITOR. [REQUIRED]

4 INSULATED CASE CIRCUIT BREAKER: WITH ELECTRONIC TRIP. [REQUIRED]

5 SOLID STATE MULTIFUNCTION METER AND CIRCUIT MONITOR (SQUARE D CM-4000T OR APPROVED EQUAL.) [REQUIRED]

6 MOLDED CASE SWITCH: WITH MOTOR OPERATOR.

7 FEEDER CONDUCTORS: DLO TYPE CABLE RECOMMENDED. REFER TO DWG A11 FOR CABLE INFORMATION AND REQUIRED CONNECTORS.

8 POWER MOUND CONTROLS. MINIMUM WIRING PER MIL-C. per Mil-C. USE SHIELDED CABLE IF LED INDICATOR LIGHTS SPECIFIED. [REQUIRED] REFER TO DWG. A8.3.

9 Mil-C-24368/2 RECEPTACLE. [REQUIRED]

10 POWER MOUND ENCLOSURE. CONSOLIDATE TELCOM IN ENCLOSURE. REFER TO C4&IT CSTO. [REQUIRED]

11 SWITCHGEAR

12 SOLID STATE POWER METER: ONE PER Mil-C RECEPTACLE. (SQUARE D PM820 OR EQUAL)

HPC
378' WHEC
270' WMEC
225' WLB

RECOMMENDED SHORE POWER DESIGN PRACTICE

DRAWING	SHEET TITLE	REV	DATE	DESCRIPTION
A7	ONE LINE DIAGRAM-HPC 2 MIL-C RECEPTACLES.	5	MM-DD-YY	-
		4	MM-DD-YY	-
		3	MM-DD-YY	-
		2	MM-DD-YY	-
		JLM	02-07-11	CSTO Appendicies (A) - Original Issue

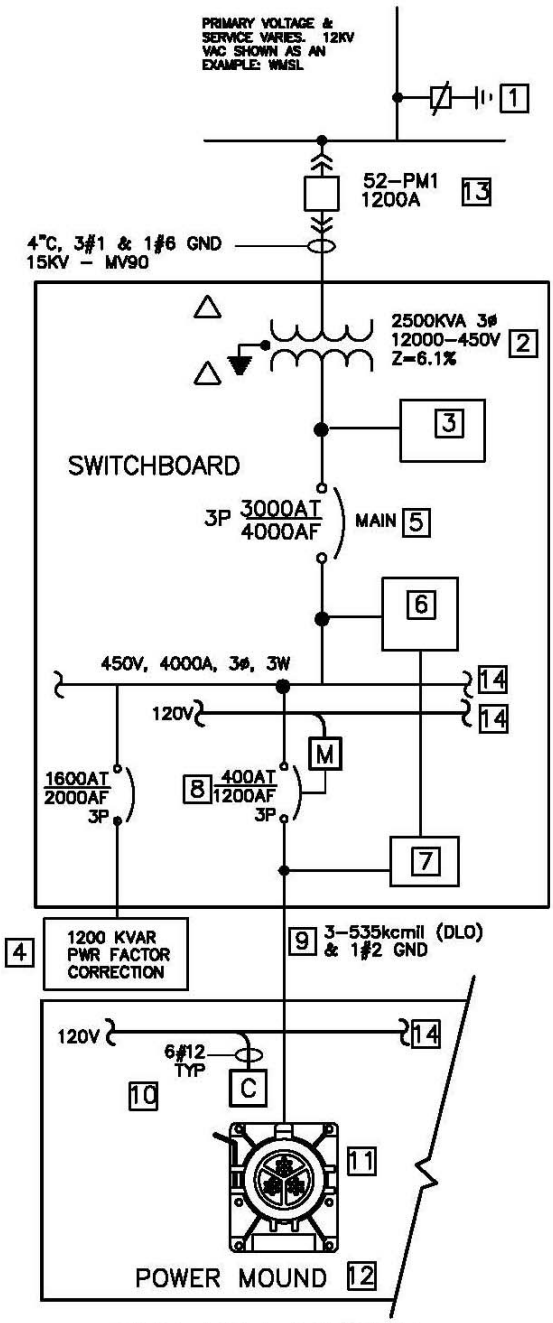

ONE LINE DIAGRAM

HPC
420' WAGB
399' WAGB
240' WLBB

ONE LINE NOTES

1. SIZES OF COMPONENTS BASED UPON 2800A SERVICE FOR 4 WSML'S IN ALAMEDA CA. SYSTEM CONSISTED OF 2 SUBSTATIONS WITH 2-2500KVA TRANSFORMERS EACH TO SERVICE 2-2800A POWER MOUNDS. THE 12KV PRI. VOLTAGE ISOLATION TRANSFORMERS ELIMINATED A UTILITY DELTA/WYE TRANSFORMER. UTILITY COMPANY TO MAINTAIN.

2. REFER TO SECTION FOUR OF THIS CSTO FOR THE TECHNICAL INFORMATION ON THE REQUIRED EQUIPMENT IDENTIFIED.

3. RECEPTACLE DISCONNECT CAN BE ELECTRICALLY OR MANUALLY OPERATED. DESIGNER TO DETERMINE METHOD. IF MECHANICAL RECOMMEND UTILIZING ES; MODULE TYPE INTERLOCK CONFIGURATION FOR MIL-C.

4. REFER TO DRAWING A8.2 FOR TYPICAL PUSHBUTTON CONTROLS TO BE PROVIDED FOR EACH MIL-C-24368/2 RECEPTACLE IN A POWER MOUND ENCLOSURE. REFER TO DWG. A9 FOR MIL-C MICRO-SWITCH ASSEMBLY.

EQUIPMENT ITEMS:

1 LIGHTNING ARRESTOR [REQUIRED]

2 ISOLATION TRANSFORMER - SHIELDED PRIMARY, SECONDARY AND CORE. [REQUIRED]

3 ELECTRONIC INSULATION RESISTANCE MONITOR. [REQUIRED].

4 CAPACITOR BANK: POWER FACTOR CORRECTION. SIZE SHOWN IS BASED UPON 7 MIL-C RECEPTACLE INSTALLATION IN ALAMEDA. SIZES TO BE DETERMINE BY DESIGNER ON SITE PER SITE BASES.

5 INSULATED CASE CIRCUIT BREAKER WITH ELECTRONIC TRIP. [REQUIRED]

6 SOLID STATE MULTIFUNCTION METER AND CIRCUIT MONITOR: SQUARE D CM-4000T OR APPROVED EQUAL. [REQUIRED]

7 SOLID STATE POWER METER: ONE PER Mil-C RECEPTACLE. [REQUIRED]

8 INSULATED CASE CIRCUIT BREAKER WITH MOTOR OPERATOR. [REQUIRED]

9 FEEDER CONDUCTORS: DLO RECOMMENDED. SIZE DEPENDENT ON DISTANCE AND VOLTAGE DROP. SIZES SHOWN FOR ALAMEDA INSTALLATION IN A CABLE TRAY AND BUNDLED.

10 POWER MOUND CONTROLS: MINIMUM WIRING PER MIL-C-24368 RECEPTACLE. USE SHIELDED CABLE FOR LED LIGHTS. REFER TO POWER MOUND DRAWINGS A8.1 & A8.2. [REQUIRED]

11 Mil-C-24368/2 RECEPTACLE: REFER TO DWG A9. [REQUIRED]

12 POWER MOUND ENCLOSURE: REFER TO DWG A8.1 & A8.2. ENCLOSURE TYP. FOR 7 & 8 MIL-C RECEPTACLES. [REQUIRED]

13 MEDIUM VOLTAGE CB: WITH SOLID STATE PROTECTIVE RELAYS. (SQUARE D TYPE SEPAM S20 OR APPROVED EQUAL.)

14 BUS: EXPANDS TO 8 RECEPTACLES WITH ASSOCIATE CIRCUIT BREAKERS.

RECOMMENDED SHORE POWER DESIGN PRACTICE

DRAWING	SHEET TITLE	REV	DATE	DESCRIPTION
A8	ONE LINE DIAGRAM-HPC 3+ MIL-C RECEPTACLES	5	MM-DD-YY	-
		4	MM-DD-YY	-
		3	MM-DD-YY	-
		2	MM-DD-YY	-
		JLM	02-07-11	CSTO Appendicies (A) - Original Issue

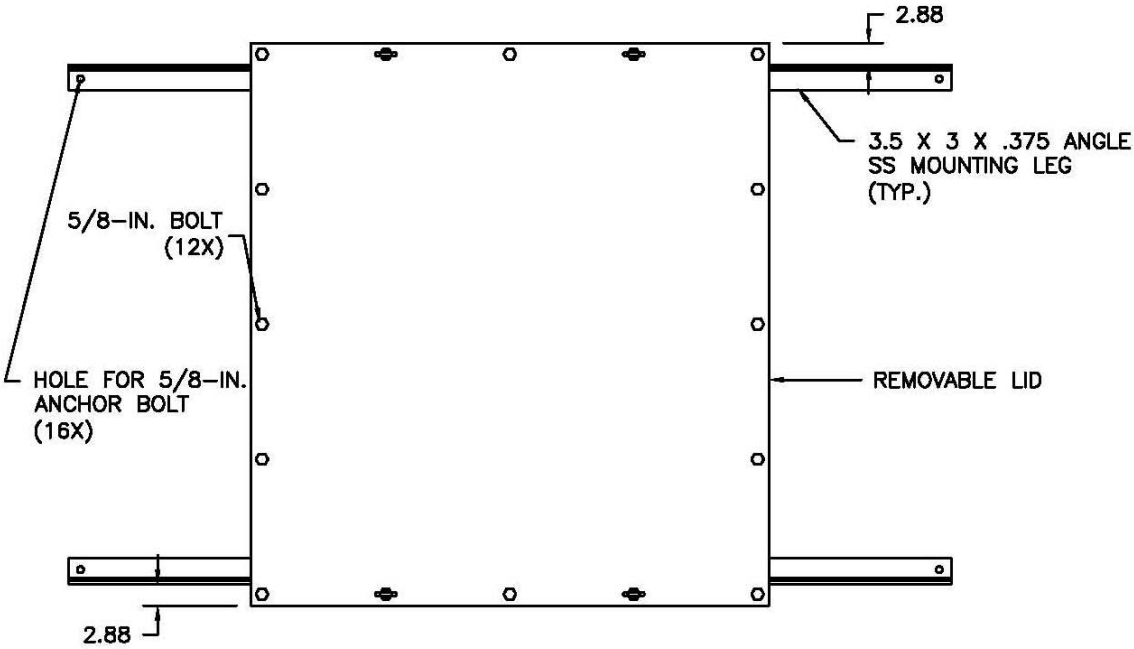

TOP VIEW

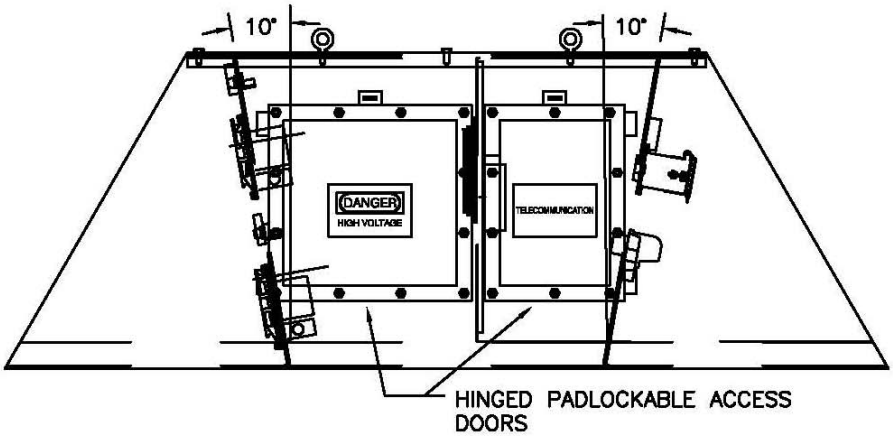

RIGHT SIDE VIEW

NOTES:
1. THE POWER MOUND WAS FABRICATED BY ESL POWER SYSTEMS, INC, CORONA CALIFORNIA. REFER THE SECTION A.4 "COMPONENT RESOURCES" FOR CONTACT INFORMATION. THIS IS AN EXAMPLE OF COMBINED SHORE-TIE POWER, COMMUNICATION AND INDUSTRIAL OUTLETS IN A SINGLE ENCLOSURE.

RECOMMENDED SHORE POWER DESIGN PRACTICE – EXAMPLE

DRAWING	SHEET TITLE	REV	DATE	DESCRIPTION
A9	POWER MOUND ENCLOSURE BSU ALAMEDA- WMSL	5	MM-DD-YY	-
		4	MM-DD-YY	-
		3	MM-DD-YY	-
		2	MM-DD-YY	-
		1	10-01-10	CSTO Appendicies (A) - Original Issue

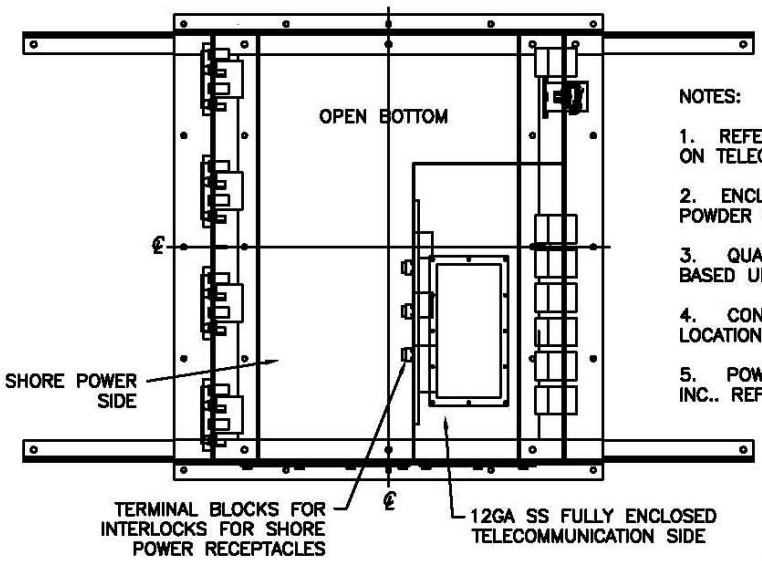

TOP VIEW
(COVER REMOVED)

NOTES:

1. REFER TO C4&IT TOCS FOR SPECIFIC INFORMATION ON TELECOMMUNICATION REQUIREMENTS.

2. ENCLOSURE IS STAINLESS STEEL CONSTRUCTION AND POWDER COATED

3. QUANTITY OF MIL-C RECEPTACLES SHOWN ARE BASED UPON CUTTER REQUIREMENTS.

4. CONTRACTOR PROVIDED POWER MAY VARY AT OTHER LOCATIONS.

5. POWER MOUND FABRICATED BY ESL POWER SYSTEMS, INC.. REFER TO SECTION A.4 FOR CONTACT INFORMATION.

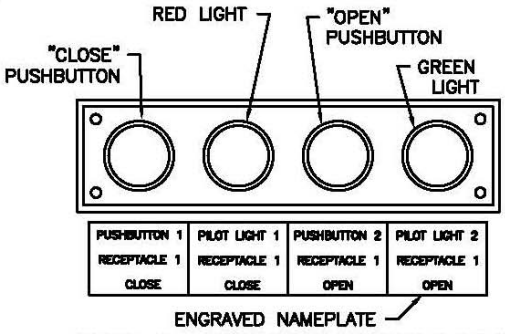

DETAIL 1 –RECEPTACLE CONTROLS (TYP)

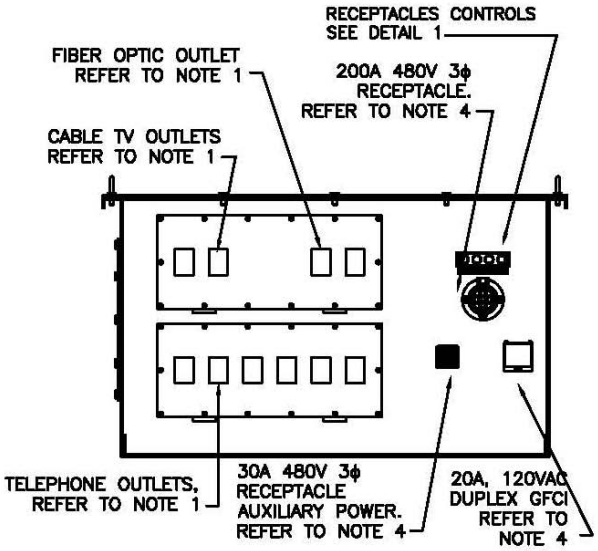

REAR VIEW–TELCOM AND CONTRACTOR PWR

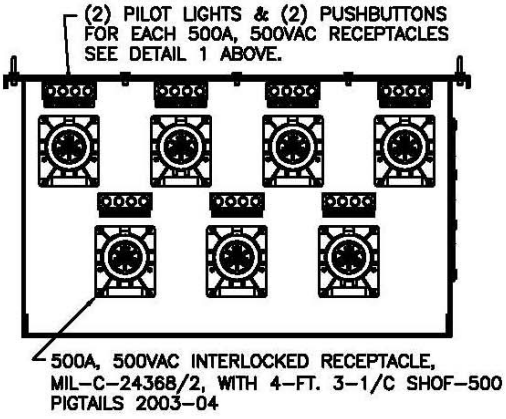

FRONT VIEW– SHIP PWR

RECOMMENDED SHORE POWER DESIGN PRACTICE – EXAMPLE

DRAWING	SHEET TITLE	REV	DATE	DESCRIPTION
A9.1	POWER MOUND ENCLOSURE BSU ALAMEDA, CA.- WMSL	5	MM-DD-YY	-
		4	MM-DD-YY	-
		3	MM-DD-YY	-
		2	MM-DD-YY	-
		JLM	02-07-11	CSTO Appendicies (A) - Original Issue

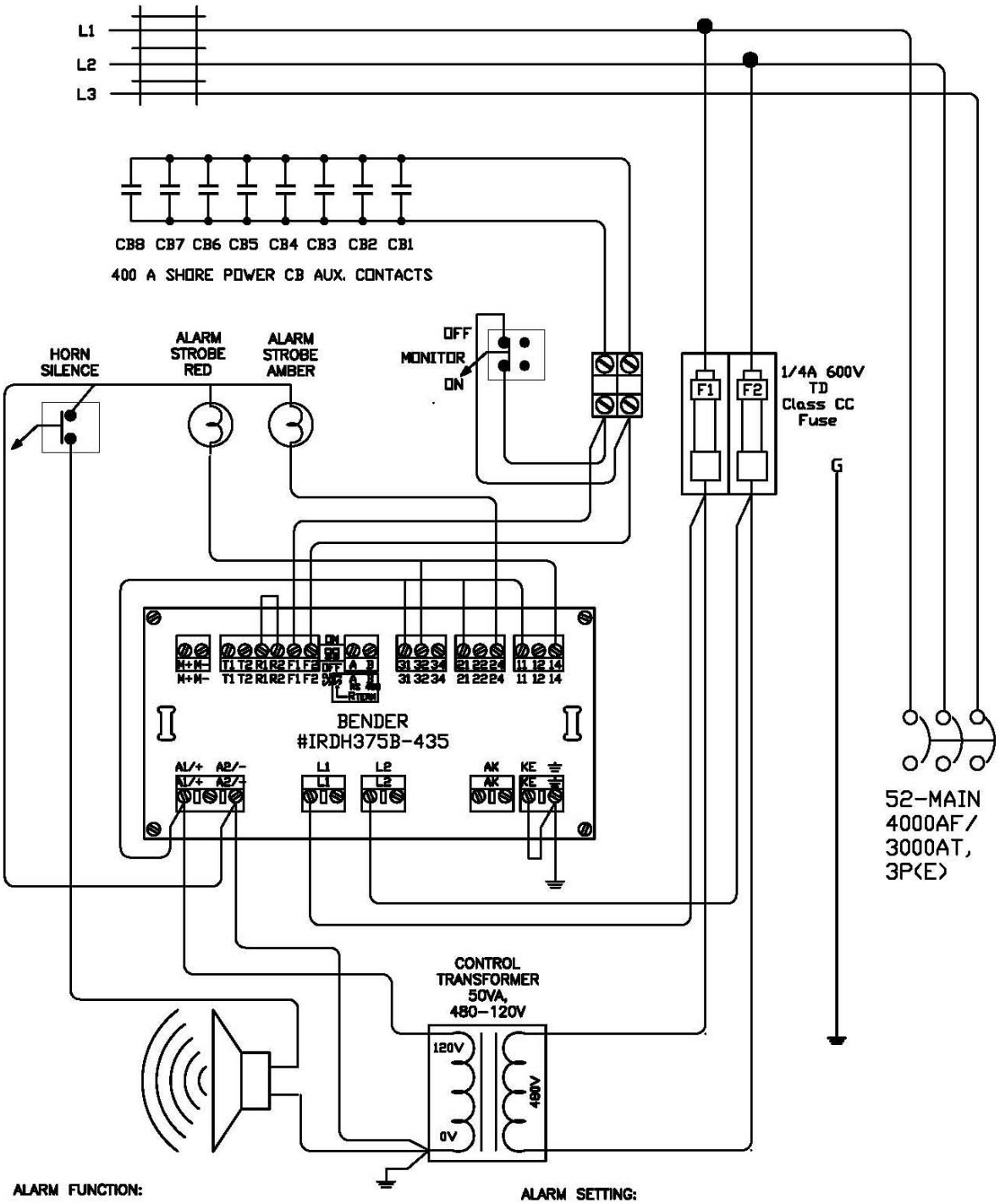

ALARM FUNCTION:

1. PRE ALARM WILL ONLY TRIGGER PRE-ALARM AMBER STROBE (EXISTING) LIGHT. LIGHT WILL STAY ON UNTIL RESET ON THE MONITOR.

2 MAIN ALARM AND SYSTEM ALARM WILL TRIGGER MAIN ALARM, HORN AND RED STROBE LIGHT. ALARM #2

ALARM SETTING:

1. SUBSTATION 1 OF 4:
   ALARM #1: 50K OHMS
   ALARM #2: 10K OHMS

A. TEMPORARY CHANGING K1 CONTACT TO TEST WILL ENERGIZE RED STROBE & HORN
B. TEMPORARY CHANGING K2 CONTACT TO TEST WILL ENERGIZE YELLOW STROBE.

DRAWING	SHEET TITLE	REV	DATE	DESCRIPTION
A9.2	INSUL. RESIST. MONITOR BSU ALAMEDA, CA. -WMSL	5	MM-DD-YY	-
		4	MM-DD-YY	-
		3	MM-DD-YY	-
		2	MM-DD-YY	-
		1	02-07-11	CSTO Appendicies (A) - Original Issue

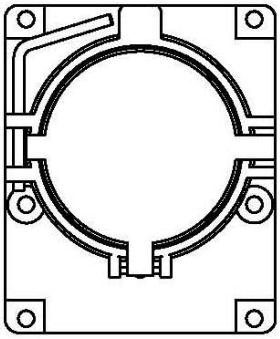

FRONT VIEW

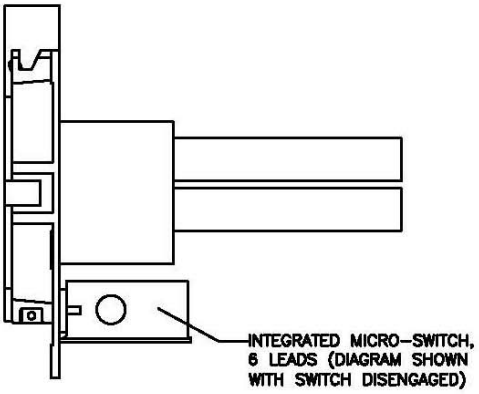

SIDE VIEW

	2	1	3	5	4	6
DOOR CLOSED		—			—	
DOOR OPEN	—			—		
PLUG INSERTED		—			—	

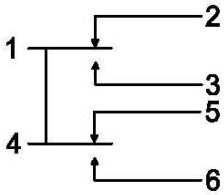

INTEGRATED MICRO-SWITCH

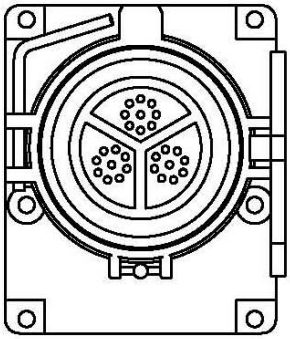

FRONT VIEW
COVER OPEN

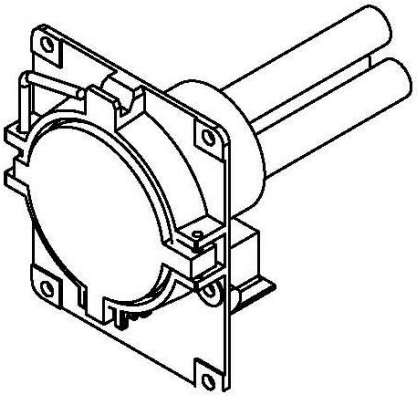

Notes:

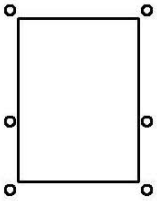

PANEL CUTOUT DIMENSIONS

CATALOG #	Cable Length "X"
R500-MILC24368-200801-1	1'
R500-MILC24368-200801-4	4'
R500-MILC24368-200801-8	8'
R500-MILC24368-200801-10	10'
R500-MILC24368-200801-12	12'

DRAWING	SHEET TITLE	REV	DATE	DESCRIPTION
A10	MIL-C-24368 RECEPT. RATED: 500A, 500VAC	5	-	-
		4	MM-DD-YY	-
		3	-	-
		2	-	-
		1	10-01-10	CSTO Appendicies (A) - Original Issue

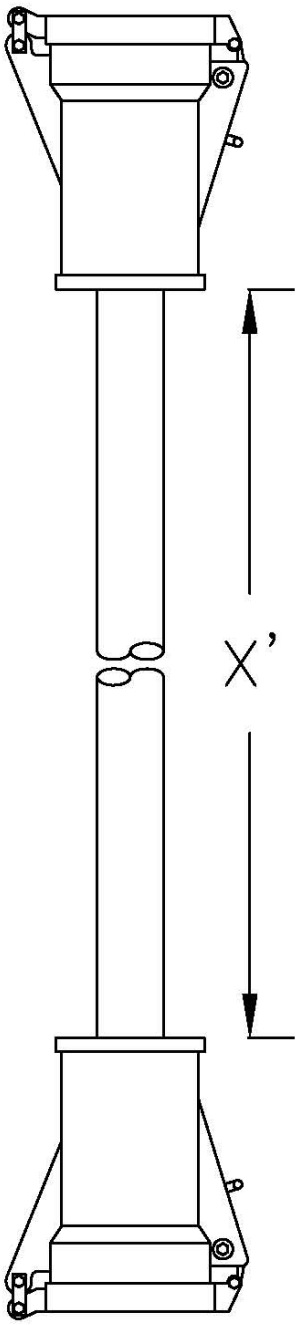

TYP. CABLE ASSEMBLY
W/MIL-C PLUG
SCALE: NTS"

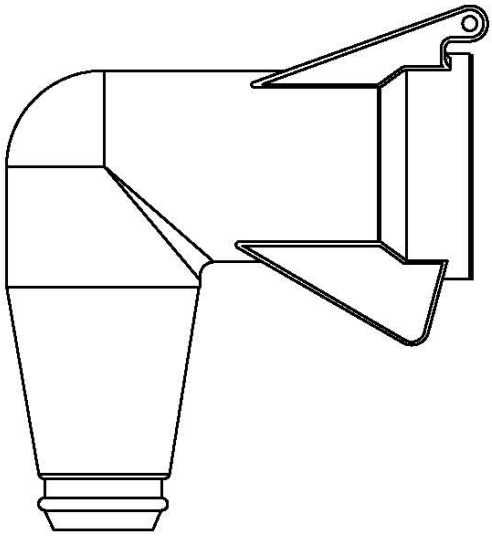

90 MIL-C PLUG (OPTIONAL)
SCALE: NTS

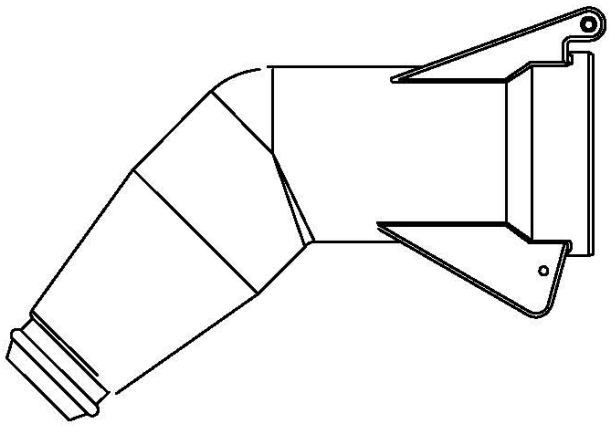

45 MIL-C PLUG (OPTIONAL)
SCALE: NTS"

EQUIPMENT NOTE
REFER TO SECTION FOUR OF THIS CSTO FOR THE TECHNICAL REQUIREMENTS OF THE EQUIPMENT SHOWN.

DRAWING	SHEET TITLE	REV	DATE	DESCRIPTION
A11	SHORE TIE CABLE ASSEMBLY	5	MM-DD-YY	-
		4	MM-DD-YY	-
		3	MM-DD-YY	-
		2	MM-DD-YY	-
		JLM	02-07-11	CSTO Appendicies (A) - Original Issue

DIESEL LOCOMOTIVE AND CAR WIRING CABLE

kcmil	MM2	OD(in)	lb/ft	AMPS(1)	AMPS(2)	DCR	ACR	IR	VD	CS	CD
373.7	185	1.1	1.545	591	362	.034	.045	.029	.092	925/24	.79
444.4	N/A	1.23	1.82	652	400	.028	.039	.028	.083	1100/24	.87
535.3	240	1.34	2.195	728	445	.024	.033	.028	.074	1325/24	.94
646.4	300	1.45	2.56	815	493	.02	.028	.027	.067	1600/24	1.025
777.7	400	1.5	3.05	904	546	.016	.025	.027	.062	1925/24	1.12

(1) IN FREE AIR (single 90C rated conductor used in combination with 75C rated connection devices located in 30degC ambient temperature condition
(2) 3 CONDUCTORS PER RACEWAY (not more than 3 current carrying conductors in an enclosed raceway with each conductor rated for 90degrC rated connection devices located in 30degC ambient temperature
IR=INDUCTIVE REACTANCE ; VD=VOLTAGE DROP (VOLTS/AMP/1000ft.) ;ACR=AC RESISTANCE @90C(OHMS/1000ft)
DCR=DC RESISTANCE @25C(OHMS/1000ft)
NOMINAL DIAMETER/OD(IN)
lb/ft (weight)
degrees Centigrade
CS=Conductor Stranding
CD=Conductor diameter inches

DIESEL LOCOMOTIVE CABLE–COMPRESSION LUGS

cable	COMPRESSION LUG		
	PENN–UNION		T&B
kcmil	Long Barrel	Short Barrel	
373.7	BBLU–050S–FL	BLU–050S–FL	
444.4	BBLU–060S–FL	BLU–060S–FL	
535.3	BBLU–065S–FL	BLU–065S–FL	
646.4	BBLU–075S–FL	BLU–075S–FL	
777.7	BBLU–100S–FL	BLU–100S–FL	

PENN–UNION: FLARED COPPER TERMINAL CRIMPS, 5/8" HOLE

DRAWING	SHEET TITLE	REV	DATE	DESCRIPTION
A12	DLO CABLE CHARACTERISTICS	5	MM–DD–YY	–
		4	MM–DD–YY	–
		3	MM–DD–YY	–
		2	MM–DD–YY	–
		1	MM–DD–YY	CSTO Appendicies (A) – Original Issue

APPENDIX B
SHORE-TIE GROUNDING DIAGRAMS

B.1 Discussion

For underway operations, cutter electrical distribution systems are designed for maximum reliability and operational availability. To that end, systems are ungrounded so that no circuit breaker will trip on the first phase to hull fault, ensuring continuity of electrical service. On board ground detection systems alert watchstanders to the fault, thus allowing vital ship's power to be maintained while electricians in the crew isolate and correct the ground fault. Immediate action is taken upon detection of ground faults to prevent a second line to hull fault on a different phase from tripping a circuit breaker on overcurrent and subsequently disabling vital equipment.

During in port periods, the shipboard electrical distribution system is ungrounded to minimize electrical shock hazards to shipboard personnel and to prevent highly corrosive leakage currents from seeking a path back to a grounded service transformer ashore through the underwater body. If an ungrounded shipboard electrical distribution system were to be connected to a grounded dockside power system through the shore-tie, neither the shore side protection scheme (automatic overcurrent trip from high fault current flowing to ground), nor the shipboard scheme (ground detection and correction) would function properly.

This dilemma occurs because the series resistance of the hull, surrounding water, and earth is too high to permit the flow of fault current necessary to trip a circuit breaker, but is low enough to cause all shipboard ground detector lamps to glow with equal intensity at all times, even if a ground actually exists shipboard. For newer cutters with active ground detectors (insulation resistance monitors), the grounded dockside transformer is immediately registered as a very low insulation resistance. With either type of ground detection system, any real shipboard grounds that may be present are masked and undetectable by the crew.

Simplified depictions of this situation are shown in this enclosure. Operating without an effective ground fault detection system is dangerous and could result in a potentially injurious or fatal shock hazard to divers and other personnel. Personnel may unwittingly complete a parallel current path from hull to earth by alighting over metal brows, connecting metal braided hoses for temporary shore utility services, or handling the hook from a dockside crane. Bonding the hull to earth with a ground strap would solve these problems by temporarily converting the shipboard electrical distribution system to a grounded type, but would likely also result in severe underwater body corrosion, an unacceptable solution.

B.2 DRAWINGS

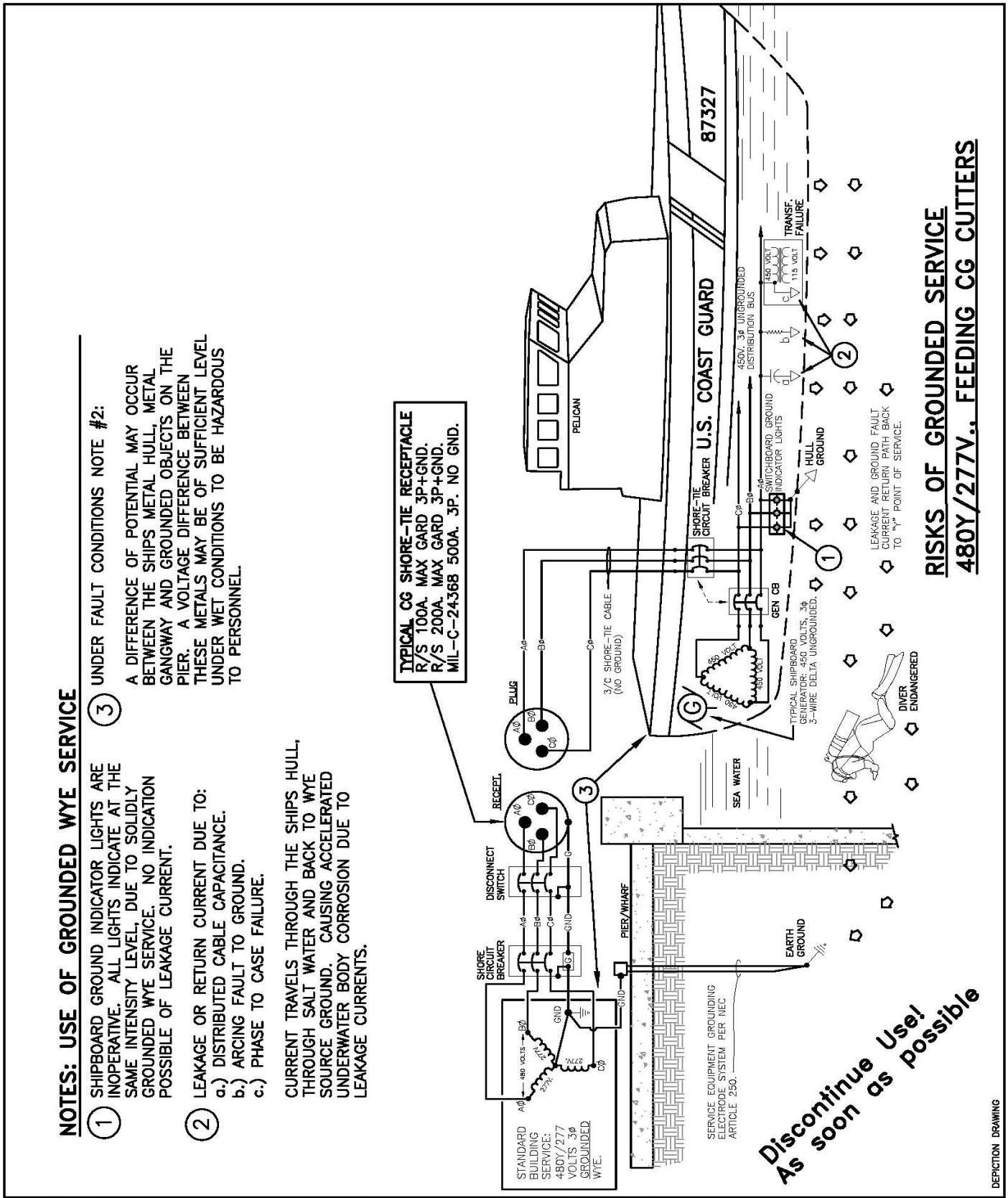

DRAWING	SHEET TITLE			
B1	Shore–Tie Grounding Diagram RISK OF GROUNDED SERVICE	4		
		3		
		2		
		1		
		DAR	01–31–11	CSTO Appendices (B) – Original Issue
		REV	DATE	DESCRIPTION

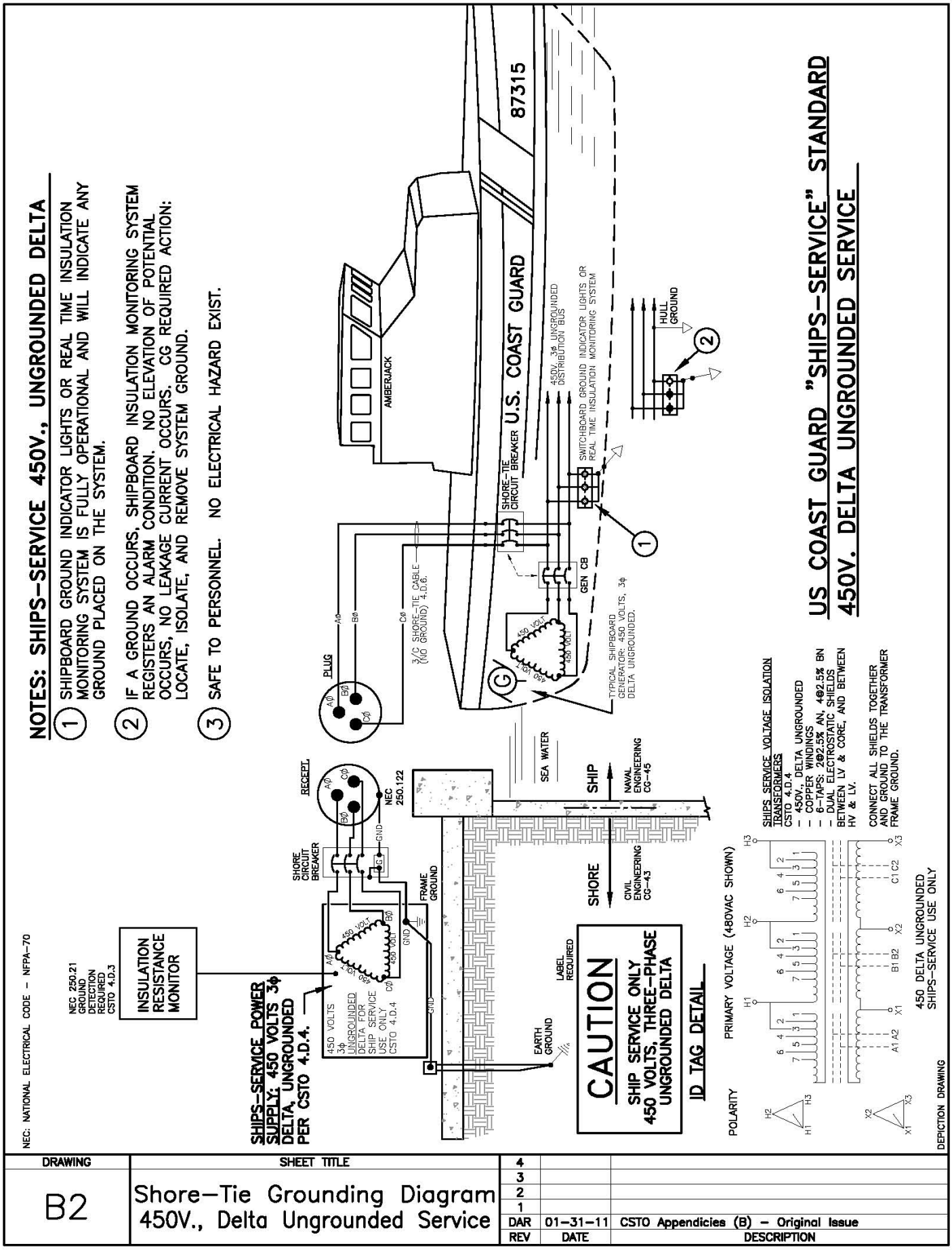

DRAWING	SHEET TITLE	REV	DATE	DESCRIPTION
B2	Shore-Tie Grounding Diagram 450V., Delta Ungrounded Service	4		
		3		
		2		
		1		
		DAR	01-31-11	CSTO Appendicies (B) - Original Issue

APPENDIX C
SHORE POWER STANDARD OPERATING INSTRUCTIONS

C.1 Background

C.1.1 Commercial electric power services are installed and available at most Coast Guard mooring facilities to provide shore-to-ship electric power. Use of commercial electric power is encouraged to minimize operating costs, reduce engine-operating hours, improve air quality, and ease the demand for watch standers.

C.1.2 Vessel crews are responsible for using the installed disconnecting device(s), either locally or remotely operated, to establish safe conditions for the connection and disconnection of their shore power cable(s) from the dockside receptacles. Maintenance, repair, and testing of dockside infrastructure, including the resetting of any protective devices inside locked switchboards, are the responsibility of the facility engineer.

C.2 Precautions

C.2.1 In general, ship service generators shall not be operated in parallel with shore power; however, those cutters with the built in capability may do so momentarily for the sole purpose of shifting power supply from ship to shore or vice versa.

C.2.2 Shore power cable connections shall not be made or broken before dockside and vessel shore power circuit breakers or disconnects have been opened.

C.2.3 Heavy equipment, whose operation would result in excessive current on the shore tie, shall be operated with the ship service generator(s) supplying the shipboard power system.

C.2.4 Prior to connection and periodically during operation, inspect shore power plugs, receptacles, and cables for signs of overheating, arcing, loose connections, chafing, and submersion. Shore power cables shall be properly supported and provided with sufficient slack to accommodate expected tidal variations and wind effects. Provide adequate chafing protection and do not allow cables to become submerged.

C.2.5 Whenever the electrical load nears the maximum value of the shore tie's capacity, steps should be taken to either reduce the shipboard load or have a ship service generator placed in operation.

C.2.6 Each vessel's In Port Fire Bill shall contain emergency deenergization procedures to be followed when receiving electric power from shore.

C.2.7 Dockside electric shore tie connections are normally sized for the cutter or boat homeported there. Both homeport and visiting vessels shall ensure that the dockside connection has the proper voltage, current rating, configuration, and phase rotation each and every time they hook up.

C.2.8 The long time delay setting of each dockside circuit breaker shall be no greater than the smaller of:

C.2.8.1 The total ampacity of the shore-to-ship cable(s) connected to it.

C.2.8.2 The ampacity of the feeder between the associated shore power receptacle(s) and the in hull circuit breaker, including the rating of any step down transformer.

C.2.8.3 Shore power cable ampacity shall normally be calculated at 40°C (104°F) ambient air temperature. A 50°C (122°F) ambient air temperature should be substituted in exceptionally hot climates or when a cable passes through an operating engine room or boiler space.

C.2.8.4 For MIL-C-24368/2 receptacle(s), test each cover interlock circuit prior to connection if not tested within the previous 90 days.

C.2.8.5 For two or more cutters with active ground detectors sharing shore power derived from the same dockside transformer, the insulation resistance monitor on all but one cutter must be de-energized to prevent interference and false indications. Ensure that any de-energized ground detectors are placed back in service when acceptable conditions are reestablished.

C.3 Boats

C.3.1 Power Transfer from Boat to Shore

C.3.1.1 Ensure that the boat's shore power circuit breaker and the dockside shore power disconnect device are both open.

C.3.1.2 Connect the shore power cable to the boat receptacle. If not already attached, connect the shore power cable to the dockside receptacle.

C.3.1.3 Energize the shore power cable from shore.

C.3.1.4 Transfer to shore power in accordance with the boat's standard operating procedures. Verify that voltage and current are as expected.

C.3.2 Power Transfer from Shore to Boat

C.3.2.1Open the boat's shore power circuit breaker and transfer all loads to the onboard inverters or generators in accordance with the boat's standard operating procedures.

C.3.2.2Open the dockside shore power disconnect device. Disconnect the shore power cable from the boat. If desired, also disconnect the dockside end.

C.3.2.3 Cover the receptacle and plug ends to prevent moisture or foreign material from entering the plug or receptacle. For a one day mission, coil up the disconnected cable on the dock. Otherwise, stow the shore tie cable out of the weather to minimize sunlight exposure and prevent accidental damage.

C.4 Cutters

C.4.1 Power Transfer from Cutter to Shore

C.4.1.1Perform insulation and conductor resistance checks prior to connecting 450 volt three phase shore power cables.

C.4.1.2 Ensure that the dockside disconnecting means for each receptacle to be used ashore is open. Connect the shore power cable(s) to the dockside receptacle(s). For cutters with multiple shore tie cables, energize the cables and verify that the differential voltages (measured between each pair of cables) are zero for at least two phases.

C.4.1.3 Ensure that the shore power cable(s) are de-energized. Ensure that the shipboard shore power circuit breaker(s) are open. Make connections to the shipboard receptacle(s).

C.4.1.4 Energize the shore power cable(s) from shore. Verify that the power mound indications are consistent with the expected dockside shore power circuit breaker position(s). Check each cable for proper phase rotation using the installed shipboard meter.

C.4.1.5 Using the on board ground detector, check for main bus grounds. Transfer to shore power and secure onboard generators in accordance with the cutter's standard operating procedures. Using the on board ground detector, check for grounds again.

C.4.2 Power Transfer from Shore to Cutter

C.4.2.1 Using the on board ground detector, check for grounds. De-energize shore power and transfer to onboard generators in accordance with the cutter's standard operating procedures. Using the on board ground detector, check for main bus grounds again.

C.4.2.2 Ensure that the shipboard shore power circuit breaker(s) are open. De-energize the shore power cable(s) from shore. Verify that the power mound indications are consistent with the expected dockside shore power circuit breaker position(s).

C.4.2.3 Disconnect the shore power cable(s) at both ends. During dockside electric plant testing evolutions, the shore power cable(s) need not be disconnected when shore power will be restored at the conclusion of testing.

C.4.2.5 Cover the receptacle and plug ends to prevent moisture or foreign material from entering the plug or receptacle. Stow the shore tie cables out of the weather to minimize sunlight exposure and prevent accidental damage.

C.5 Shore Power Operation

C.5.1 While operating on ungrounded shore power, use the on board ground detector to periodically check for main bus grounds as follows:

C.5.1.1 Hourly as part of a normal watch standing round.

C.5.1.2 Shortly after energizing major electrical equipment.

C.5.1.3 Upon receipt of an alarm or warning from the dockside shore power insulation resistance monitor

C.5.2 If a main bus ground is detected while operating on shore power, perform ground isolation in accordance with cutter's standard operating procedures. It may be necessary to start up a generator and divorce from shore power to establish whether the fault is located afloat, on the shore tie, or on another vessel sharing the same shore power source. For cutters with passive ground detectors and no onboard isolation transformer, the dockside shore power insulation resistance monitor display or alarms may provide better indication of ground isolation progress.

C.5.3 While operating on grounded shore power, the onboard ground detector will not be able to determine if any shipboard loads are grounded. Passive three lamp type detectors will always display equal brightness; active electronic ground detectors will register about zero kilohms, masking any real shipboard grounds. If available, a portable isolation transformer should be used or the cutter moved to a

berth with ungrounded power. Cutters that must operate on grounded shore power should periodically (e.g., weekly) transfer to generators or other ungrounded power source in order to check for grounds.

C.5.4 For cutters equipped with ammeters that can display the phase current of each shore tie conductor, periodically compute the differential current between phase pairs in the same cable. Cutters with multiple shore power cables should also compare like phases in different cables. An unexplainable severe imbalance is indicative of a high resistance connection and should be promptly investigated, preferably with an infrared camera.

C.5.5 Periodically monitor shore power phase to phase voltages. Promptly investigate any low or high readings and be alert for evidence of single phasing. Disconnect from shore power before operating limits are exceeded.

APPENDIX D
TRANSPORTABLE SHORE POWER ISOLATION TRANSFORMERS

D.1 BACKGROUND

D.1.1 The portable isolation transformer trailers were developed to address site electrical conditions where only grounded wye power service are available at mooring sites and later for specific forward deployable LPC's or HPC's. They provide the shielded ungrounded delta power the ships require and the interface between grounded shore facilities electrical systems, therefore maintaining compliance with section 4 of this Configuration Standard. Trailers are set up with MIL-C-24368/2 receptacles for ship connection and can be either hardwired or provided with matching plug for local facility connections. These trailers are to be used as a temporary interface for ships while moored at sites other than homeport locations.

D.1.2 The trailers are an extension of shore facility electrical systems therefore the yearly maintenance of these trailers shall be the responsible of the local facility engineers. Maintenance as a minimum should follow the maintenance guidelines provided in Appendix "A" paragraph A.2.1.6 under power mounds. Ships have the responsibility of inspecting the trailers prior to their usage and connecting the trailers properly according to the NEC.

D.1.3 The trailer should not be used until the proper equipment grounding cable (provided on the trailers) are properly connected to the existing service ground. This is required to maintain compliance with grounding requirements of the NEC.

D.1.4 The trailers are currently construction with the following sizes:

D.1.4.1 150KVA isolation transformer with shielding, three phase, ungrounded delta 450Vac with a single MIL-C-24368/2 receptacle. Will service cutters identified in Appendix A drawing A3.

D.1.4.2 400KVA isolation transformer with shielding, three phase, 450V with two Mil-C-24368/2 receptacles. that will service the cutters identified in Appendix A Drawing A6.

D.1.4.3 750KVA three phase, 450V that will service the cutters identified in Appendix A Drawing A7

D.1.5 The Coast Guard shipyard built 400KVA units for the 175' WLM Coastal Buoy Tender and 750KVA units for the 225' WLB Seagoing Buoy Tender. They currently utilize some of the units in the Shipyard. Contact Ronald Schelhouse Shipyard Engineering at 410-636-7968 for further information on these units. The original designs and construction for the trailer concept were developed by BSU Kodiak. The shipyard units have minor differences from the original designs.

D.1.6 Sequence of Operation: Refer to the attached shipyard operator's manual on the 400Kva and the 750Kva units. Modifications have been made to the original shipyard manual to address proper connecting procedures and reference appropriate sections within the CSTO.

D.1.7 Recommended grounding method is identified in drawing D1. Existing units shall be modified accordingly to comply with this drawing.

D.2.1 400KVA PORTABLE ISOLATION TRANSFORMER OPERATOR'S MANUAL

A. PURPOSE: To demonstrate the proper operation of the 400kVA portable isolation transformer.

B. REFERENCES:

(a). Drawing Number YD_320_7 Wiring Diagram and Trailer Modifications.

(b). DSOP-083

C. PURPOSE: To demonstrate the proper operation of the 400kVA portable isolation transformer.

D. REFERENCES:

(c). Drawing Number YD_320_7 Wiring Diagram and Trailer Modifications.

(d). DSOP-083

1. DESCRIPTION

The purpose of the isolation transformer is to step down the 480VAC, 3-phase (DELTA) to 450VAC, 3- phase (DELTA) and to isolate the grounded shore power tie from the ungrounded 3-phase, 3 wire ship's power. The portable transformer is connected between the shore power tie and the ship's power.

The transformer includes:

- 1, NATO style plug with cable to plug into the shore power receptacle.
- 1, NATO receptacle is provided to connect to the ship.
- 1, 3-phase, 400AT circuit breaker to protect the transformer input.
- 1, 3 phase 400AT circuit breaker to protect the transformer output.
- 2, front access doors for maintenance.
- 3, status indicator lights.
- 1, LIM (Line Insulation Monitor) to monitor the transformer secondary side for phase to ground insulation faults.
- Push–To-Test (PTT) switch to test LIM operation.
- LIM disconnect switch, to disconnect LIM from power system.
- 1 Equipment Grounding cable.

Portable Transformer Trailer

2. TRANSPORTATION OF TRANSFORMER

CAUTION: This transformer trailer is not intended for highway use. The maximum towing speed of this trailer is 5 MPH.

The trailer must be level and tires shall be chocked when disconnected from towing vehicle.

3. TRANSFORMER TAPS

The transformer is provided with 2, $2^1/_2$% FCAN & 4, $2^1/_2$% FCBN. Measure shore power voltage and select taps from chart below. Adjust the primary taps to achieve 450VAC on transformer.

FCAN – (Full Capacity Above Nominal)

FCBN – (Full Capacity Below Nominal)

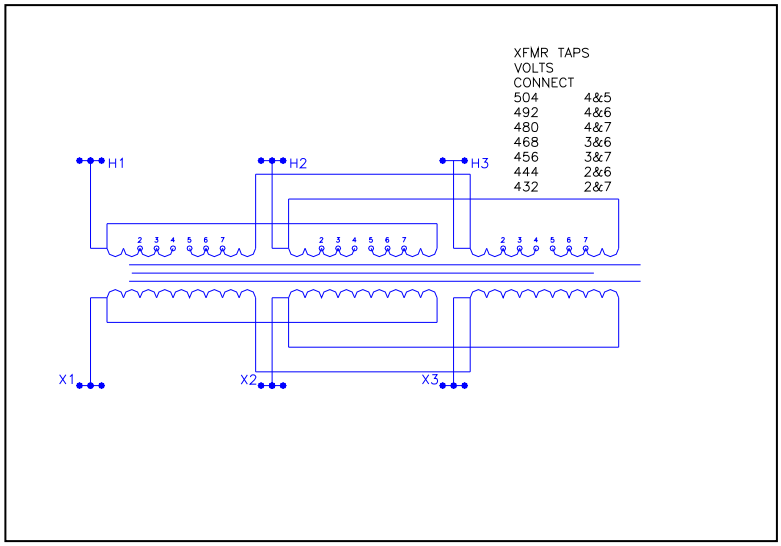

Warning: Prior to connecting transformer's equipment grounding conductor to existing shore side facility grounding connection, inspect to insure all connections are tight. This cable must be properly connected before proceeding to be in compliance with the NEC.

4. TRANSFORMER OPERATION

CAUTION: Ensure that the shore power receptacle is of the correct rotation before connecting transformer plug.

- Connect transformer's NATO plug 1 into facilities shore side NATO receptacle.
- Connect ship service shore tie NATO plug into transformer NATO receptacle 1.
- Energize facilities shore side NATO receptacle.
- Energize transformer's CB1.
- Ensure LIM disconnect switch is "ON". Green light should be illuminated.
- Note light indication for ground fault condition; Correct ground condition if present. Red light indicates ground condition.
- Press test switch (PTT) of LIM to assure proper function of LIM and associated lights on top of transformer.
- Connect ships NATO plug into receptacle 1.
- Close CB2.
- Note light indication for ground fault condition; Correct ground condition if present. Red light indicates ground condition.
- Close ship's service breaker.

- Note light indication for ground fault condition; Correct ground condition if present. Red light indicates ground condition.
- Shift from ship service generation to shore tie service.
- Toggle LIM disconnect switch to "OFF" position if transformer's LIM interferes with the ship's LIM. When LIM disconnect switch is in "OFF" position, clear light will be illuminated.
- See description of transformer's indicator lights below.

5. TRANSFORMER INDICATOR LIGHTS

3 lights on top of the transformer indicate the status of the transformer or power system.

The transformer has 3 indicator lights, red, yellow and green. The indicator lights are:

- GREEN – Green light indicates that the transformer LIM (Line Insulation Monitor) is connected to the system and no insulation fault exists.
- CLEAR – Clear light indicates that the transformer LIM is not connected to the system and their may or may not be a line insulation fault. This implies that the shipboard LIM is monitoring the system.
- RED – Red light indicates that either the LIM is connected to the circuit and has detected a line insulation fault or one of the receptacle covers is open.

If the ship's LIM is to monitor the system, turn the LIM disconnect switch to the "OFF" position. Some power systems cannot have 2 LIM's operating at the same time. Some shipboard LIM monitors will detect the transformer LIM as a fault to ground. The transformer's clear light will illuminate when the LIM disconnect switch is "OFF".

6. LINE INSULATION MONITOR (LIM)

Ungrounded systems are called "floating" electrical systems. The secondary of a 3-phase transformer is typical of this type of system. It is generally accepted that on installations using ungrounded electrical supply systems, protection against electrical shock cannot normally be provided by using conventional ground fault relays (GFR). Leakage currents to ground require a return path. Therefore, when no such path exists, a standard GFR would be unable to detect a fault when it occurs. The LIM sequentially monitors each phase of the ungrounded system. If an insulation fault develops anywhere on the system between the source and the load, a small current will flow through the high impedance of the LIM. When this current exceeds the field adjustable trip level, the LIM will detect it and close or open a set of contacts. The contacts can be used to turn on indicator lights. The user is able to individually set the alarm level and the trip level from 20% to 80% of the maximum leakage current of the monitor. Any leakage current above the alarm level will activate the alarm relay and alarm relay. Should the leakage current rise above the trip level, the trip relay and trip LED will activate.

The sensitivity of the LIM can be adjusted by a potentiometer on the front face of the LIM. It is adjustable from 20% to 80% of the maximum leakage current of the LIM. The maximum current leakage of the LIM models is listed below:

Manufacturer	**Model**	**Maximum Current**
Cutler-Hammer	D64L-35	35mA
Cutler-Hammer	D64L-50	50Ma

Notes:

MAINTENANCE INFORMATION

1. Verify the last inspection by Shore facilities

2. Perform inspection of all electrical connections since last usage specifically if the unit has been transport to deployment site.

D.2.1 750KVA PORTABLE ISOLATION TRANSFORMER OPERATOR'S MANUAL

A. PURPOSE: To demonstrate the proper operation of the 750kVA portable isolation transformer.

B. REFERENCES:

(e). Drawing Number YD_320_6 Wiring Diagram and Trailer Modifications.

(f). DSOP-083.

1. DESCRIPTION

The purpose of the isolation transformer is to step down the 480VAC, 3-phase (DELTA) to 450VAC, 3-phase (DELTA) and to isolate the grounded shore power tie from the ungrounded 3 phase, 3 wire ship's power. The portable transformer is connected between the shore power tie and the ship's power.

Portable Transformer Trailer

The transformer includes:

- 2, NATO style plugs with cable to plug into the shore power receptacles.
- 2, NATO receptacles are provided to connect to the ship.
- 1, 3-phase, 800AT circuit breaker to protect the transformer input.
- 2, parallel, 3-phase 400AT circuit breakers to protect the transformer output.
- 2, front access doors for maintenance.
- 3, status indicator lights.
- 1, LIM (Line Insulation Monitor) to monitor the transformer secondary side for phase to ground insulation faults.

- Push–To-Test (PTT) switch to test LIM operation.
- LIM disconnect switch, to disconnect LIM from power system.
- 1 Equipment Grounding cable.

2. TRANSPORTATION OF TRANSFORMER

CAUTION: This transformer trailer is not intended for highway use. The maximum towing speed of this trailer is 5 MPH. The trailer must be level and tires shall be chocked when disconnected from towing vehicle.

3. TRANSFORMER TAPS

The transformer is provided with 2, $2^1/_2$% FCAN & 4, $2^1/_2$% FCBN. Measure shore power voltage and select taps from chart below. Adjust the primary taps to achieve 450VAC on transformer.

FCAN – (Full Capacity Above Nominal)

FCBN – (Full Capacity Below Nominal)

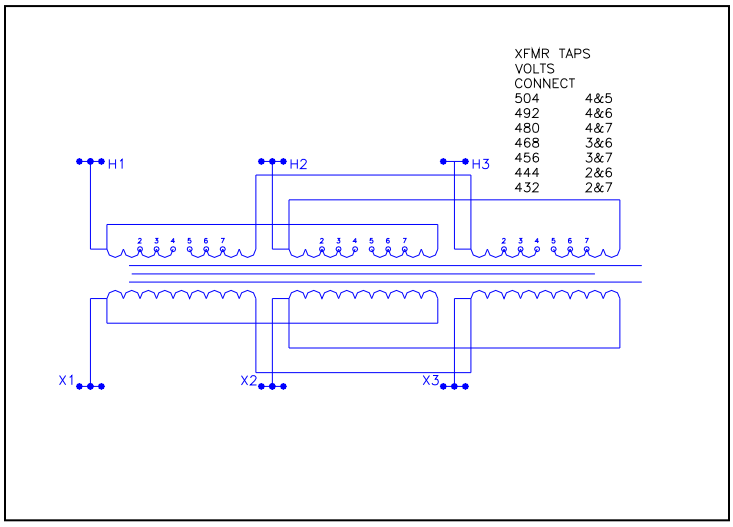

Warning: Prior to connecting transformer's equipment grounding conductor to existing shore side facility grounding connection, inspect to insure all connections are tight. This cable must be properly connected before proceeding to be in compliance with the NEC.

4. TRANSFORMER OPERATION

CAUTION: Ensure that the 2 shore power receptacles are of the same phase orientation and rotation before connecting transformer plugs.

- Connect transformer's NATO plug 1 and plug 2 into facilities shore side NATO receptacles.
- Connect ship service shore tie NATO plug into transformer NATO receptacle 1 and 2.
- Energize facilities shore side NATO receptacles.
- Energize transformer's CB1
- Ensure LIM disconnect switch is "ON". Green light should be illuminated.
- Note light indication for ground fault condition; Correct ground condition if present. Red light indicates ground condition.
- Press test switch (PTT) of LIM to assure proper function of LIM and associated lights on top of transformer.
- Connect ships NATO plugs into receptacles 1 and 2.
- Close CB2 and CB3.
- Note light indication for ground fault condition; Correct ground condition if present. Red light indicates ground condition.
- Close ship's service breaker.
- Note light indication for ground fault condition; Correct ground condition if present. Red light indicates ground condition.
- Shift from ship service generation to shore tie service.
- Toggle LIM disconnect switch to "OFF" position if transformer's LIM interferes with the ship's LIM. When LIM disconnect switch is in "OFF" position, clear light will be illuminated.
- See description of transformer's indicator lights below.

5. TRANSFORMER INDICATOR LIGHTS.

Three (3) lights on top of the transformer indicate the status of the transformer or power system.

The transformer has 3 indicator lights, red, clear and green. The indicator lights are:

- GREEN – Green light indicates that the transformer LIM (Line Insulation Monitor) is connected to the system and no insulation fault exists.
- CLEAR – Clear light indicates that the transformer LIM is not connected to the system and there may or may not be a line insulation fault. This implies that the shipboard LIM is monitoring the system.

- RED – Red light indicates that either the LIM is connected to the circuit and has detected a line insulation fault or one of the receptacle covers is open.

If the ship's LIM is to monitor the system, turn the LIM disconnect switch to the "OFF" position. Some power systems cannot have 2 LIM's operating at the same time. Some shipboard LIM monitors will detect the transformer LIM as a fault to ground. The transformer's clear light will illuminate when the LIM disconnect switch is "OFF".

6. LINE INSULATION MONITOR (LIM)

Ungrounded systems are called "floating" electrical systems. The secondary of a 3 phase transformer is typical of this type of system. It is generally accepted that on installations using ungrounded electrical supply systems, protection against electrical shock cannot normally be provided by using conventional ground fault relays (GFR). Leakage currents to ground require a return path. Therefore, when no such path exists, a standard GFR would be unable to detect a fault when it occurs. The LIM sequentially monitors each phase of the ungrounded system. If an insulation fault develops anywhere on the system between the source and the load, a small current will flow through the high impedance of the LIM. When this current exceeds the field adjustable trip level, the LIM will detect it and close or open a set of contacts. The contacts can be used to turn on indicator lights. The user is able to individually set the alarm level and the trip level from 20% to 80% of the maximum leakage current of the monitor. Any leakage current above the alarm level will activate the alarm relay and alarm relay. Should the leakage current rise above the trip level, the trip relay and trip LED will activate.

The sensitivity of the LIM can be adjusted by a potentiometer on the front face of the LIM. It is adjustable from 20% to 80% of the maximum leakage current of the LIM. The maximum current leakage of the LIM models are listed below:

Manufacturer	Model	Maximum Current
Cutler-Hammer	D64L-35	35mA
Cutler-Hammer	D64L-50	50Ma

Notes:

MAINTENANCE INFORMATION

1. Verify the last inspection by Shore facilities

2. Perform inspection of all electrical connections since last usage specifically if the unit has been transport to deployment site.

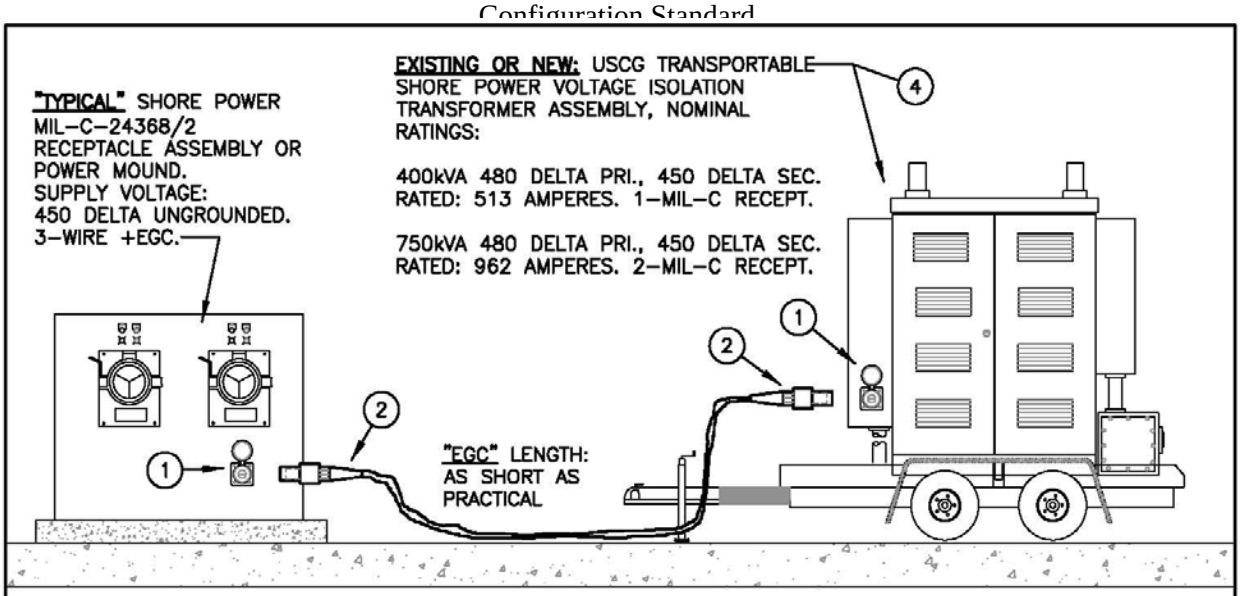

"EGC" = EQUIPMENT GROUNDING CONDUCTOR, NEC ARTICLE 250.

"TYPICAL GROUNDING CONNECTION"

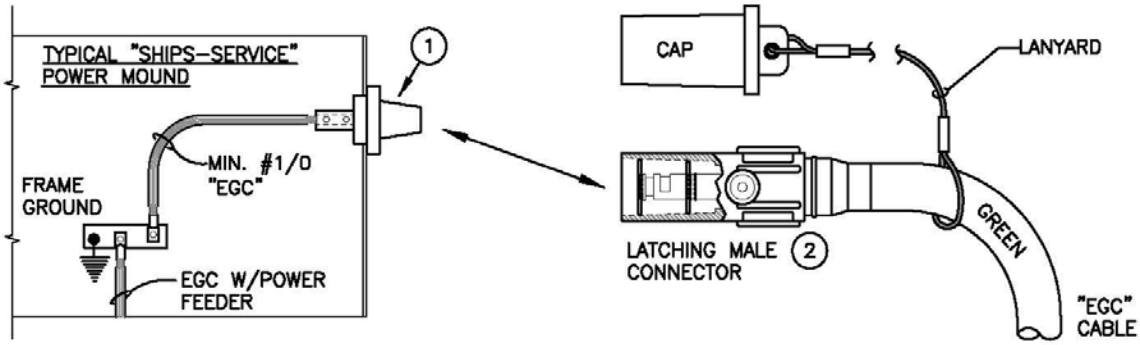

NOTES:

GENERAL: TRANSPORTABLE TRAILER MOUNTED SHORE POWER VOLTAGE ISOLATION TRANSFORMERS REQUIRE AN EXTERNAL NEC ARTICLE 250, EQUIPMENT GROUNDING CONDUCTOR (EGC) FOR EQUIPMENT OPERATION AND MAXIMUM SAFETY TO OPERATING PERSONNEL UNDER AN ABNORMAL FAULT CONDITION. THE FIRST OPERATOR SEQUENCE IS CONNECTION OF THE EXTERNAL GROUNDING CABLE AND TESTING/CERTIFICATION OF PROPER GROUNDING.

(1) PERMANENT PANEL MOUNTED, 200 AMPERE GREEN, CAM-LOK "J" SERIES, DOUBLE SET SCREW TYPE, FEMALE DEVICE WITH NEMA-3R RECEPTACLE COVER (OR EQUIVALENT). PROVIDE ONE GROUND PLUG ASSEMBLY ON THE TRAILER AND ONE ON THE SHORE POWER RECEPTACLE ENCLOSURE PERMANENTLY WIRED TO EFFECTIVE GROUNDING BUS ASSEMBLIES IN EACH ENCLOSURE.

(2) PROVIDE A GREEN FLEXIBLE 200 AMPERE GROUNDING CABLE ASSEMBLY WITH A MOLDED MATCHING MALE PLUG ASSEMBLY TO PROVIDE AN EFFECTIVE EQUIPMENT GROUNDING CONDUCTOR SYSTEM SIMILAR TO A GENERATOR QUICK-CONNECTION SYSTEM USING PORTABLE POWER CABLES. RECOMMENDED CABLE SOURCE TRYSTAR OR EQUIVALENT. PROVIDE CABLE CONNECTORS WITH GREEN MALE PROTECTIVE CAPS ATTACHED WITH A LANYARD.

(3) EXTERNAL EQUIPMENT GROUNDING CONDUCTOR SYSTEM WILL BE EXPOSED TO SALT SPRAY AND ALL COMPONENTS SHALL BE SO RATED.

(4) EXISTING FIELD UNITS REQUIRE THIS MODIFICATION AS SOON AS POSSIBLE.

RECOMMENDED TRAILER GROUNDING METHOD

ENCLOSURE	SHEET TITLE			
D1	Transportable Shore Power Transf. Recommended Grounding Method	4		
		3		
		2		
		1		
		DAR	10-1-10	CSTO Appendices (D) – Original Issue
		REV	DATE	DESCRIPTION