CONSTRUCT NEW WATER STORAGE FACILITY

1100 N COLLEGE AVE
FAYETTEVILLE, AR 72703

PROJECT No: 564-19-101

CONSTRUCTION DOCUMENTS

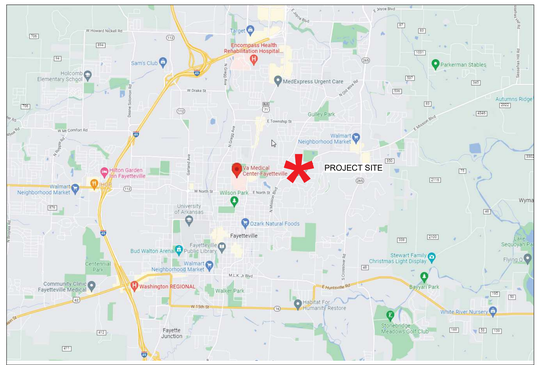

VICINITY MAP

NOT TO SCALE

N

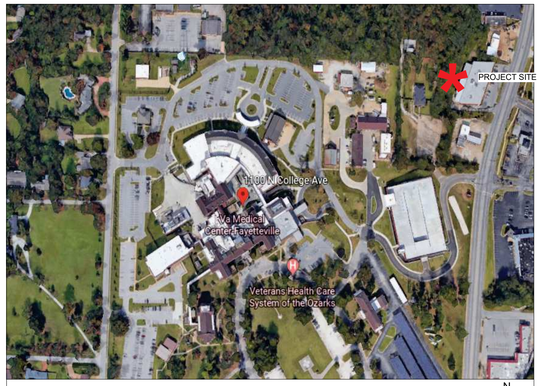

CAMPUS MAP

NOT TO SCALE

N

PROJECT INFORMATION

PROJECT INFORMATION
CONSTRUCT NEW WATER STORAGE FACILITY
VAHO
1100 N COLLEGE AVE
FAYETTEVILLE, AR 72703

PROJECT NUMBER: 564-19-101

PROJECT INFORMATION
THIS PROJECT WILL CONSTRUCT A NEW 600,000 GALLON GROUND MOUNTED WATER TANK & SUPPORTING PUMP HOUSE w/ WATER PUMPS TO PROVIDE OPERATING PRESSURE FOR ALL BUILDINGS & SERVICES AT ALL LEVELS, AN EMERGENCY POWER GENERATOR w/ SUPPORT EQUIPMENT FOR PUMP SYSTEM AND ALL SUPPORTING FACILITIES.

THIS PROJECT IS CLASSIFIED AS MISSION CRITICAL IN ACCORDANCE WITH VA PHYSICAL SECURITY DESIGN MANUAL.

BUILDING SUMMARY
GROSS FLOOR AREA: ..... 775 GSF

MAIN USE: INDUSTRIAL, GENERAL
SECONDARY USES: NONE

SCHEDULE OF BID ITEMS

BID ITEM 1, BASE BID: PROVIDE ALL NECESSARY LABOR, MATERIALS, TOOLS, AND GENERAL CONDITIONS FOR:

"CONSTRUCT NEW WATER STORAGE FACILITY"
VA PROJECT 564-19-101
VETERANS HEALTHCARE SYSTEM OF THE OZARKS
FAYETTEVILLE, ARKANSAS

WORK INCLUDES, BUT IS NOT LIMITED TO: SITE DEMOLITION, CIVIL SITE, NEW VERTICAL CONSTRUCTION OF STEEL AND MASONRY BUILDINGS, ELEVATED WATER STORAGE TANKS AND ASSOCIATED BELOW AND ABOVE-GRADE UTILITIES, PLUMBING, HVAC AND ELECTRICAL.

BID ITEM 2, DEDUCT ALTERNATE #1: OMIT FACE BRICK. DIMENSIONALLY ADJUST FLOOR SLABS, OPENINGS, AND FLASHINGS TO ACCOMMODATE THINNER WALL.

BID ITEM 3, DEDUCT ALTERNATE #2: OMIT JIB CRANE AND FOUNDATION.

BID ITEM 4, DEDUCT ALTERNATE #3: OMIT WATER LINE EXTENSION TO LEROY POND BUILDING.

INDEX OF DRAWINGS

GENERAL INFORMATION	
GI001	COVER SHEET
GI002	SYMBOLS, LEGENDS & GENERAL NOTES
GI003	STANDARD ABBREVIATIONS
GI101	CODE PLAN
GENERAL CONDITIONS	
GC101	BUILDING 1 GROUND FLOOR ICRA PLAN
GC102	BUILDING 1 FIRST FLOOR ICRA PLAN
GC103	BUILDING 8 GROUND FLOOR ICRA PLAN
CIVIL	
CI100	EXISTING SITE PLAN
CD101	DEMOLITION PLAN
CD102	DEMOLITION PLAN
CU103	SITE PLAN
CU104	WATER TOWER AREA & WATER SUPPLY PLAN
CU105	BOLLARD DETAILS
CU106	SIDEWALK, SECURITY FENCE, CONCRETE, AND ASPHALT DETAILS
CU107	WATER TOWER DETAILS
CU108	DEDUCT ALTERNATE. CONSTRUCT WATER LINE EXTENSION PLAN
CU109	WATER LINE DETAILS
CU110	WATER VAULT DETAILS
CG111	DRAINAGE PLAN
CG112	DRAINAGE PLAN DETAILS
CG113	EROSION CONTROL DETAILS
CI114	LANDSCAPE PLAN
STRUCTURAL	
S001	STRUCTURAL NOTES
S002	STRUCTURAL NOTES
S100	PUMP HOUSE LAYOUT
SB101	FOUNDATION SECTIONS
SB102	FOUNDATION SECTIONS
SF101	FRAMING SECTIONS
SF102	FRAMING SECTIONS
ARCHITECTURAL	
AE101	PUMP HOUSE FLOOR PLAN
AE201	EXTERIOR ELEVATIONS
AE301	BUILDING SECTIONS
AE501	EXTERIOR DETAILS
AE502	OPENING DETAILS
AE601	OPENING, FINISH AND SIGNAGE SCHEDULES & TYPES
AE901	PROJECT 3D VIEWS

FIRE PROTECTION	
FA101	PUMP HOUSE FIRE ALARM PLAN
FX101	PUMP HOUSE FIRE PROTECTION PLAN
PLUMBING	
PS101	PUMP STATION UTILITY PLAN
PL101	PUMP STATION LAYOUT
PL301	PUMP STATION SECTION
PL302	SITE PIPING SECTIONS
PL303	SITE PIPING SECTIONS
MECHANICAL	
M101	MECHANICAL NOTES AND LEGEND
M201	MECHANICAL HVAR FLOOR PLAN
M301	MECHANICAL HVAR DETAILS
M302	MECHANICAL HVAR DETAILS
ELECTRICAL	
E101	ELECTRICAL LEGEND AND ABBREVIATIONS
E102	ELECTRICAL PUMP STATION SITE PLAN
E103	ELECTRICAL PUMP STATION PLAN
E104	ELECTRICAL ONE-LINE AND SCHEDULES
E105	ELECTRICAL DETAILS
SECURITY AND ELECTRONICS	
TY001	SECURITY ELECTRONICS SYMBOLS AND GENERAL NOTES
TY002	SECURITY ELECTRONICS SITE PLAN
TY003	SECURITY ELECTRONICS ENLARGED SITE PLAN
TY101	SECURITY ELECTRONICS PUMP HOUSE FLOOR PLAN
TY201	SECURITY ELECTRONICS BUILDING 1 GROUND FLOOR PLAN
TY202	SECURITY ELECTRONICS BUILDING 1 FIRST FLOOR PLAN
TY301	SECURITY ELECTRONICS BUILDING 8 GROUND FLOOR PLAN
TY501	SECURITY ELECTRONICS PACS DETAILS
TY502	SECURITY ELECTRONICS SSTV DETAILS
TY503	SECURITY ELECTRONICS MISCELLANEOUS DETAILS 1
TY504	SECURITY ELECTRONICS MISCELLANEOUS DETAILS II
TY601	SECURITY ELECTRONICS PACS RISER DIAGRAMS
TY602	SECURITY ELECTRONICS SSTV RISER DIAGRAM
TY603	SECURITY ELECTRONICS IDS RISER DIAGRAM

MISSION CRITICAL

CONSULTANTS

FIRE PROTECTION
FP&C CONSULTANTS KC, LLC
1330 BURLINGTON STREET, STE. 200
NORTH KANSAS CITY, MO 64116

SECURITY
GRW
801 CORPORATE DRIVE
LEXINGTON, KY 40503

CIVIL ENGINEER
HODGES ENGINEERING
231 SHORELINE DRIVE
MOUNTAIN HOME, AR 72653

STRUCTURAL ENGINEER
BERNHARD TME
BUILDING 2, 1 ALLIED DRIVE
SUITE 260
LITTLE ROCK, AR 72202

ARCHITECT/ENGINEER OF RECORD
A/E
JohnsonDanforth & Associates
2200 N. RODNEY PARHAM ROAD
SUITE 210
LITTLE ROCK, AR 72212

501-404-4811
jda@JohnsonDanforth.com

JDA PROJECT #: 2018.001

STAMP

STATE OF ALABAMA
DANIEL E. BUSH
NO. 6626
REGISTERED ARCHITECT

Digitally signed by Daniel E. Bush
Date: 2022.07.11 10:13:38-04'00'

Office of Construction and Facilities Management

VA U.S. Department of Veterans Affairs

Drawing Title: COVER SHEET	Phase: CONSTRUCTION DOCUMENTS	Project Title: CONSTRUCT NEW WATER STORAGE FACILITY	Project Number: 564-19-101
			Building Number:
Approved: Project Director		Location: FAYETTEVILLE, AR	Drawing Number: GI001
		Issue Date: 2022.07.15 / Checked: BUSH / Drawn: DEB	

E:\Revitwork_ARCHITECTURE_BIM ASSIST_PROJECTS\JDA\ia21.002 564-19-101 Fayetteville Water Storage\BIM\564-19-101_Fayetteville Water Storage_Arch\22.rvt 7/11/2022 5:35:30 PM

VA FORM 08 - 6231

DRAFTING SYMBOLS

DRAWING TITLE
1 View Name
1/8" = 1'-0"

DETAIL CALLOUT
00
AE501

DETAIL INDICATOR FOR SMALL CONDITIONS
D2 / AE512

ELEVATION INDICATOR, EXTERIOR
1
AE201

ELEVATION INDICATOR, INTERIOR, MULTIPLE VIEW
1 2 3 4
AE211

BUILDING SECTION INDICATOR
00
AE201

WALL FINISH INDICATOR
P-01

CASEWORK TAG
BA3034

LETTER PAIR INDICATES CASEWORK FAMILY: RE: AE511-514 FOR DETAILS

FIRST PAIR OF NUMBERS INDICATES UNIT WIDTH (I.E. 30")

SECOND PAIR INDICATES COUNTERTOP HEIGHT (I.E. 34")

SPACE IDENTIFICATION
Room name
1A105

OPENING INDICATOR
1F157B

CEILING HEIGHT INDICATOR
9' - 0"

WINDOW INDICATOR
1

EQUIPMENT INDICATOR
JSN

SHEET NOTES
12 5

PARTITION TYPE INDICATOR
A_4A

NORTH ARROW
N — INDICATES PROJECT NORTH
INDICATES TRUE NORTH

DRAWING REVISION INDICATOR
2

ELEVATION INDICATOR
FIRST FLOOR
20' - 6"

TOILET ACCESSORY TAG
xxxx

SCOPE INDICATORS

EXISTING CONSTRUCTION TO REMAIN

EXISTING CONSTRUCTION TO BE REMOVED

NEW CONSTRUCTION

VV ITEM - GOVERNMENT FURNISHED / GOVERNMENT INSTALLED

VC ITEM - GOVERNMENT FURNISHED / CONTRACTOR INSTALLED

CC ITEM - CONTRACTOR FURNISHED / CONTRACTOR INSTALLED

COLUMN LINE INDICATORS
1 — INDICATES COLUMN LINE DESIGNATION
A
EXISTING

1 — INDICATES COLUMN LINE DESIGNATION
A
NEW

TYPICAL PARTITION NOTES

1. TESTING AGENCIES FOR THE FIRE ASSEMBLIES IDENTIFIED ON THE PARTITION SCHEDULE ARE:
   A. UL – UNDERWRITERS LABORATORY DESIGN NUMBER
   B. GA – GYPSUM ASSOCIATION DESIGN NUMBER
2. PLAN DIMENSIONS ARE TYPICALLY TO GRID LINE, FACE OF STUD, OR FACE OF CONCRETE OR CMU UNLESS NOTED OR INDICATED OTHERWISE. DOORS NOT LOCATED BY PLAN DIMENSIONS ARE LOCATED BY JAMB DETAILS REFERENCED FROM DOOR SCHEDULE. CRITICAL CLEARANCES ARE DESIGNATED 'CLR'.
3. THE PARTITION TYPE NOTED BY A SYMBOL CONTINUES BETWEEN CORNERS AND BETWEEN INTERSECTING PARTITIONS. AT OPENINGS, PROVIDE THE SAME PARTITION TYPE ABOVE AND BELOW SUCH OPENING AS THAT ON EITHER SIDE OF THE OPENING. AT PARTITIONS SCHEDULED TO EXTEND TO STRUCTURE ABOVE, EXTEND THE PARTITION AROUND AND ABOVE DUCTS, BEAMS, AND OTHER OBSTRUCTIONS. ALIGN DIFFERENT PARTITION THICKNESSES SO THAT THE FINISHED WALL PLANES CONTINUE UNBROKEN WITHIN EACH ROOM OR CORRIDOR, UNLESS NOTED OTHERWISE. WHERE FACE OF COLUMN FURRING IS SHOWN AS ALIGNING WITH FACE OF PARTITION, CONTINUE PARTITION FACE UNBROKEN PAST THE COLUMN. STANDARD COLUMN FURRING DETAILS LOCATE PARTITION FACE.
4. WHERE PARTITIONS ARE INDICATED AS BEING FIRE-RATED, CONTINUE PARTITIONS UNBROKEN TO BOTTOM OF DECK ABOVE AND ALONG THE ENTIRE PERIMETER OF THE SPACES BEING SEPARATED BY THE FIRE-RATED PARTITIONS. CONTINUE FIRE-RATED PARTITION SEPARATIONS WITHOUT INTERRUPTION WHERE THEY INTERSECT NON-RATED PARTITIONS.

PARTITION LEGEND

NEW UNRATED PARTITION

NEW / EXISTING 1 HOUR BARRIER

E:\Vantage_ARCHITECTURE_BIM\ASSETS_PROJECTS\JDA\ab21.002-564-19-101 Fayetteville Water Storage\BIM\564-19-101_Fayetteville Water Storage_Arch.rvt 7/11/2022 5:35:35 PM

Revisions: **Date:**

CONSULTANTS

FIRE PROTECTION
FP&C CONSULTANTS KC, LLC
1330 BURLINGTON STREET, STE. 200
NORTH KANSAS CITY, MO 64116

SECURITY
GRW
801 CORPORATE DRIVE
LEXINGTON, KY 40503

CIVIL ENGINEER
HODGES ENGINEERING
231 SHORELINE DRIVE
MOUNTAIN HOME, AR 72653

STRUCTURAL ENGINEER
BERNHARD TME
BUILDING 2, 1 ALLIED DRIVE
SUITE 260
LITTLE ROCK, AR 72202

ARCHITECT/ENGINEER OF RECORD

A/E
JohnsonDanforth & Associates
2200 N. RODNEY PARHAM ROAD
SUITE 210
LITTLE ROCK, AR 72212

501-404-4811
jda@JohnsonDanforth.com

JDA PROJECT #: 2018.001

STAMP
STATE OF ALABAMA
DANIEL E. BUSH
NO. 6656
REGISTERED ARCHITECT
Digitally signed by Daniel E. Bush
Date: 2022.07.11 13:14:36-04'00'

Office of Construction and Facilities Management

VA U.S. Department of Veterans Affairs

Drawing Title: SYMBOLS, LEGENDS & GENERAL NOTES	Phase: CONSTRUCTION DOCUMENTS	Project Title: CONSTRUCT NEW WATER STORAGE FACILITY	Project Number: 564-19-101
			Building Number: 39
Approved: Project Director	FULLY SPRINKLERED	Location: FAYETTEVILLE, AR	Drawing Number: GI002
		Issue Date: 2022.07.15 / Checked: BUSH / Drawn: DEB	

VA FORM 08 - 6231

A	
A LABEL	CLASS A DOOR
A/C	AIR CONDITIONING
A/C UNIT	AIR CONDITIONING UNIT
A/E	ARCHITECT/ENGINEER
AAMA	AMERICAN ARCHITECTURAL MANUFACTURERS ASSOCIATION
AB	ANCHOR BOLT
ABA	ARCHITECTURAL BARRIERS ACT
ABC	AGGREGATE BASE COURSE
AC	ASBESTOS CEMENT OR ASPHALTIC CONCRETE
ACI	AMERICAN CONCRETE INSTITUTE
ACS DR	ACCESS DOOR
ACS FLR	ACCESS FLOOR
ACS PNL	ACCESS PANEL
ACST	ACOUSTIC
ACT	ACOUSTICAL CEILING TILE
AD	AREA DRAIN
ADA	AMERICANS WITH DISABILITIES ACT
ADB	AUTOMATIC DOOR BOTTOM
ADC	AUTOMATIC DOOR CLOSER
ADDL	ADDITIONAL
ADDN	ADDITION
ADH	ADHESIVE
ADJ	ADJACENT, ADJOINING, OR ADJUSTABLE
ADMIN	ADMINISTRATION
AFC	ABOVE FINISHED COUNTER
AFF	ABOVE FINISHED FLOOR
AFG	ABOVE FINISHED GRADE
AFS	ABOVE FINISHED SLAB
AGA	AMERICAN GAS ASSOCIATION, ASSOCIATED GENERAL CONTRACTORS
AGGR	AGGREGATE
AHJ	AUTHORITY HAVING JURISDICION
AHR	ANCHOR
AHU	AIR HANDLING UNIT
AIA	AMERICAN INSTITUTE OF ARCHITECTS
AISC	AMERICAN INSTITUTE OF STEEL CONSTRUCTION
ALT	ALTERNATE, ALTERNATIVE
ALT NO	ALTERNATE NUMBER
ALUM	ALUMINUM
AMP	AMPERE
AMT	AMOUNT
ANOD	ANODIZE
ANSI	AMERICAN NATIONAL STANDARDS INSTITUTE
ANT	ANTENNA
APA	AMERICAN PLAYWOOD ASSOCIATION
APPD	APPROVED
APPROX	APPROXIMATE, APPROXIMATELY
APT	APARTMENT
AR	AS REQUIRED
ARCH	ARCHITECT, ARCHITECTURAL
ASB	ASBESTOS
ASI	ARCHITECT'S SUPPLEMENTAL INSTRUCTION
ASKLR	AUOMATIC SPRINKLER
ASPH	ASPHALT
ASSN	ASSOCIATION
ASTM	AMERICAN SOCIETY FOR TESTING AND MATERIALS
ATCH	ATTACHMENT
ATM	AUTOMATIC TELLER MACHINE
ATS	AUTOMATIC TRANSFER SWITCH
AUTO	AUTOMATIC
AUX	AUXILIARY
AV	AUDIO-VISUAL
AVE	AVENUE
AVG	AVERAGE
AW	ACID WASTE
AWI	ARCHITECTURAL WOODWORKING INSTITUTE
AWPA	AMERICAN WOOD PRESERVERS'S ASSOCIATION
AWS	AMERICAN WELDING SOCIETY
AWT	ACOUSTICAL WALL TREATMENT
B	
B LABEL	CLASS B DOOR
B PL	BASE PLATE
BALC	BALCONY
BAT	BATTEN
BB	BULLETIN BOARD
BD	BOARD
BD FT	BOARD FEET (FOOT)
BEV	BEVEL
BHMA	BUILDER'S HARDWARE MANUFACTURER'S ASSOCIATION
BI FLD DR	BIFOLDING DOORS
BITUM	BITUMINOUS
BKG	BACKING
BLD	BUILD
BLDG	BUILDING
BLKG	BLOCKING
BLKT	BLANKET
BLVD	BOULEVARD
BM	BEAM OR BENCHMARK
BOT	BOTTOM
BR	BEDROOM
BRCG	BRACING
BRDG	BRIDGING
BRDG JST	BRIDGING JOIST
BRG	BEARING
BRG PL	BEARING PLATE
BRKT	BRACKET
BRZ	BRONZE
BSMT	BASEMENT
BTWN	BETWEEN
BU	BUSHEL
BUR	BUILT-UP ROOFING
C	
C	CELSIUS CHANNEL OR CHANNEL CELSIUS
C CONC	CAST CONCRETE
C LABEL	CLASS C DOOR
C TO C	CENTER TO CENTER
C/C	CONTRACTOR FURNISHED/ CONTRACTOR INSTALLED
C/VA	CONTRACTOR FURNISHED/ GOVERNMENT INSTALLED
CAB	CABINET
CAC	CEILING ATENUATION CLASS
CB	CATCH BASIN OR CORNER BEAD
CBB	CEMENTITIOUS (BACKER) BOARD
CC	CUBIC CENTIMETER
CCTV	CLOSED CIRCUIT TELEVISION
CCW	COUNTERCLOCKWISE
CD	CONSTRUCTION DOCUMENTS OR CONTRACT DOCUMENTS
CEM	CEMENT, CEMENTITIOUS
CEM PLAS	CEMENT PLASTER
CER	CERAMIC
CF	CONTRACTOR FURNISHED
CFLG	COUNTERFLASHING
CFM	CUBIC FEET PER MINUTE
CFMF	COLD-FORMED METAL FRAMING
CFS	CUBIC FEET PER SECOND
CG	CENTER OF GRAVITY OR CORNER GUARD
CGSFU	CERAMIC GLAZED STRUCTURAL FACING UNITS
CH BD	CHALKBOARD
CHEM	CHEMICAL
CHFR	CHAMFER
CHK	CHECK
CI	CAST IRON
CIP	CAST-IN-PLACE
CIR	CIRCLE
CIRC	CIRCULATING, CIRCULAR
CIRC	CIRCULAR
CJ	CONSTRUCTION JOINT OR CONTROL JOINT
CL	CENTER LIINE
CLDG	CLADDING
CLG	CEILING
CLG HT	CEILING HEIGHT
CLR	CLEAR
CM	CONSTRUCTION MANAGEMENT
cm2	SQUARE CENTIMETER
cm3	CUBIC CENTIMETER
CMU	CONCRETE MASONRY UNIT
CNR	CORNER
CNTR	COUNTER
CO	CARBON MONOXIDE, CERTIFICATE OF OCCUPANCY, CLEAN OUT, OR COMPANY
co2	CARBON DIOXIDE
COL	COLUMN
COM	COMMON
COMB	COMBINAION, COMBINED
COMM	COMMUNICATION
COMP	COMPONENT
CONC	CONCRETE
CONC FLR	CONCRETE FLOOR
COND	CONDENSER OR CONDITION
CONF	CONFERENCE
CONN	CONNECTION
CONSTR	CONSTRUCTION
CONT	CONTINUOUS, CONTINUE
CONTR	CONTRACTOR
COORD	COORDINATE
COR	COORDINATION OFFICER
CORR	CORRIDOR
CPM	CRITICAL PATH METHOD
CPRS	COMPRESSIBLE
CPT	CARPET
CRS	COLD ROLLED STEEL
CRSI	CONCRETE REINFORCING STEEL
CSB	CONCRETE SPLASH BLOCK
CSG	CASING
CSI	CONSTRUCTION SPECIFICATIONS INSTITUTE
CSK	COUNTER SUNK
CSMT	CASEMENT
CSWK	CASEWORK
CT	CERAMIC TILE
CTB	CERAMIC TILE BASE
CTF	CERAMIC TILE FLOOR
CTG	COATING
CTR	CENTER CONTOUR
CTRL	CONTROL
CTV	CABLE TELEVISION
CU	COPPER C
CU FT	CUBIC FEET
CU IN	CUBIC INCH
CU YD	CUBIC YARD
CURT	CURTAIN
CYL	CYLINDER
CYL L	CTLINDER LOCK
D	
D	DEPTH OR PENNY (NAIL)
D LABEL	CLASS D DOOR
DAT	DATUM
DB	DECIBEL
DBL	DOUBLE
DBL GLZ	DOUBLE GLAZE
DC	DIRECT CURRENT
DEG	DEGREE
DEL	DELETE
DEMO	DEMOLITION
DEPT	DEPARTMENT
DET	DETAIL
DF	DRINKING FOUNTAIN
DIA	DIAMETER
DIAG	DIAGONAL DIAGRAM OR DIAGRAM DIAGONAL
DIFF	DIFFERENCE OR DIFFUSER
DIM	DIMENSION
DIR	DIRECTION
DISP	DISPENSER
DIST	DISTANCE
DIV	DIVIDE OR DIVISION
DL	DEAD LOAD
DOC	DOCUMENT
DOUG FIR	DOUGLAS FIR
DOZ	DOZEN
DR	DOOR, DRAIN, DRESSING ROOM, OR DRIVE
DR CL	DOOR CLOSER
DR FR	DOOR FRAME
DR OPNG	DOOR OPENING
DS	DOWNSPOUT
DSGN	DESIGN
DW	DISHWASHER
DWG	DRAWING
DWTR	DUMBWAITER
E	
E	EAST
E LABEL	CLASS E DOOR
EA	EACH
EFF	EFFICIENCY
EFS	EXTERIOR FINISH SYSTEM
EIFS	EXTERIOR INSULATION AND FINISH SYSTEM
EJ	EXPANSION JOINT
EL	ELEVATION
ELAST	ELASTOMERIC
ELEC	ELECTRIC, ELECTRICAL
ELEC DR OP	ELECTRIC DOOR OPENER
ELEV	ELEVATOR
ELEVS	ELEVATIONS
EMER	EMERGENCY
EMER SHR	EMERGENCY SHOWER
ENCL	ENCLOSURE
ENGR	ENGINEER
ENVIR	ENVIRONMENT
EPA	ENVIRONMENTAL PROTECTION AGENCY
EPDM	ETHYLENE PROPYLENE DIENE
EPO	EMERGENCY POWER OFF
EPS	EXPANDED POLYSTYRENE BOARD (INSULATION)
EQ	EQUAL
EQL SP	EQUALLY SPACED
EQUIP	EQUIPMENT
EQUIV	EQUIVALENT
ERD	EXISTING ROOF DRAIN
ESC	ESCAPE OR ESCUTCHEON
ESCAL	ESCALATOR
ESMT	EASEMENT
ESP	ESPECIALLY
EST	ESTIMATE
ETC	AND SO FORTH OR ET CETERA
EW	EACH WAY
EWC	ELECTRIC WATER COOLER
EWS	EYE WASH STATION
EXH	EXHAUST
EXIST	EXISTING
EXP	EXPANSION OR EXPOSED
EXP BT	EXPANSION BOLT
EXST GR	EXISTING GRADE
EXT	EXTERIOR, EXTERNAL, OR EXTINGUISHER
EXT GR	EXTERIOR GRADE
F	
F	FAHRENHEIT OR FEMALE
FA	FIRE ALARM
FAB	FABRIC
FAC	FACTOR
FACIL	FACILITY
FAS	FASCIA
FAS BD	FASCIA BOARD
FCO	FLOOR CLEANOUT
FCTY	FACTORY
FD	FLOOR DRAIN
FDC	FIRE DEPARTMENT CONNECTION
FDTN	FOUNDATION
FE	FIRE EXTINGUISHER
FEC	FIRE EXTINGUISHER CABINET
FF	FINISH FACE
FF EL	FINISH FLOOR ELEVATION
FF&E	FURNITURE, FIXTURE, AND EQUIPMENT
FH	FLAT HEAD OR FLAT HEAD SCREWS
FHC	FIRE HOSE CABINET
FHMS	FLAT HEAD MACHINE SCREW
FHP	FULL HEIGHT PARTITION
FHWS	FLAT HEAD WOOD SCREW
FIG	FIGURE
FIL	FILLET
FIN	FINISH
FIN FLR	FINISH FLOOR
FIN GR	FINISH GRADE
FIN WD	FINISH WOOD
FIXT	FIXTURE
FL	FLOORLINE
FLASH	FLASHING
FLDG	FOLDING
FLEX	FLEXIBLE
FLG	FLOORING
FLR	FLOOR
FLR FIN	FLOOR FINISH
FLR SK	FLOOR SINK
FLUOR	FLUORESCENT
FLUOR FIX	FLUORESCEN FIXTURE
FM	FACTORY MUTUAL
FM-G	FACTORY MUTUAL GLOBAL
FO	FINISHED OPENING
FOC	FACE OF CONCRETE OR FACE OF CURB
FOF	FACE OF FINISH
FOM	FACE OF MASONRY
FOS	FACE OF SLAB OR FACE OF CURB
FOUNT	FOUNTAIN
FOW	FACE OF WALL
FP	FIRE PROTECTION OR FIREPROOF OR FLAT PANEL DOOR
FPM	FEET PER MINUTE
FPS	FEET PER SECOND
FR	FIRE RATING, FIRE RESISTANT, OR FRAME
FR SNK	FLUSHING RIM SINK
FREQ	FREQUENCY
FRMG	FRAMING
FRP	FIBER REINFORCED POLYESTER OR FIBERGLASS REINFORCED PLASTIC
FRZ	FREEZER
FS	FEDERAL SPECIFICATION
FSTNR	FASTENER
FT	FEET OR FOOT
FTG	FOOTING
FURG	FURRING
FURN	FURNISH OR FURNITURE
FUT	FUT
FWC	FABRIC WALL COVERING
G	
GA	GAGE OR GYPSUM ASSOCIATION
GAL	GALLON, GALLONS
GALV	GALVANIC OR GALVANIZED
GALV STL	GALVANIZED STEEL
GB	GRAB BAR
GC	GENERAL CONTRACTOR
GD	GUARD
GDR	GUARD RAIL
GEN	GENERAL OR GENERATOR
GFRC	GLASS-FIBER-REINFORCED
GFRG	GLASS-FIBER-REINFORCED
GFRP	GLASS-FIBER-REINFORCED PLASTIC
GI	GALVANIZED IRON
GL	GLASS
GL BLK	GLASS BLOCK
GLU LAM	GLUED LAMINATED WOOD
GR FL	GROUND FLOOR
GRAN	GRANITE
GRTG	GRATING
GSB	GYPSUM SHEATHING BOARD
GSM	GALVANIZED SHEET METAL
GSU	GLAZED STRUCTURAL UNIT
GT	GROUT
GUAR	GUARANTEE
GUT	GUTTER
GYP	GYPSUM
GYP BD	GYPSUM BOARD
GYP PLAS	GYPSUM PLASTER
H	
H	HIGH
H PLAM	HIGH PRESSURE PLASTIC LAMINATE
HAZ MAT	HAZARDOUS MATERIALS
HB	HOSE BIBB
HC	HOLLOW CORE
HCWD	HOLLOW CORE WOOD DOOR
HDBD	HARDBOARD
HDNR	HARDENER
HDO	HIGH DENSITY OVERLAY
HDR	HEADER
HDW	HARDWARE
HDWD	HARDWOOD
HEPA	HIGH EFFICIENCY PARTICULATE AIR (FILTER)
HEX	HEXAGON
HF	HIGH FREQUENCY
HGR	HANGAR
HM	HOLLOW METAL OR HECTOMETER
HMD	HOLLOW METAL DOOR
HMDF	HOLLOW METAL DOOR AND FRAME
HMF	HOLLOW METAL FRAME
HNDRL	HANDRAIL
HO	HOLD OPEN
HORIZ	HORIZONTAL
HOSP	HOSPITAL
HP	HIGH PRESSURE OR HORSEPOWER
HQ	HEADQUARTERS
HR	HOUR
HRS	HOURS
HS	HEAT-STRENGTHENED (GLASS) OR HIGH STRENGTH
HSE	HOUSE
HSKPG	HOUSEKEEPING
HST	HOIST
HT	HEIGHT
HVAC	HEATING, VENTILATION, AND AIR CONDITIONING
HVY	HEAVY
HW	HOT WATER
HYD	HYDRANT
HYDR	HYDRAULIC
I	
I	INTERSTATE (HIGHWAY) OR MOMENT OF INERTIA
IAQ	INDOOR AIR QUALITY
IBC	INTERNATIONAL BUILDING CODE
ID	IDENTIFICATION, INSIDE DIAMETER, OR INTERIOR DESIGN
ID NO	IDENTIFICATION NUMBER
ILLUM	ILLUMINATION
INCL	INCLUDED
IND	INDEPENDENT OR INDUSTRIAL
INFO	INFORMATION
INSUL	INSULATED, INSULATION
INT	INTERIOR
INTERCOM	INTERCOMMUNICATION
INTL	INTERNATIONAL
IRMA	INVERTED ROOF MEMBRANE ASSEMBLY
IWH	INSTANANEOUS WATER HEATER
J	
J-BOX	JUNCTION BOX
JAN	JANITOR
K	
KD	KILN DRIED OR KNOCKED DOWN
KIT	KITCHEN
KO	KNOCKOUT
KPL	KICKPLATE
L	
L	ANGLE
LAB	LABORATORY
LAD	LADDER
LAM	LAMINATE
LAM GL	LAMINATED GLASS
LAU	LAUNDRY
LAV	LAVATORY
LBR	LUMBER
LBS	POUND
LD BRG	LOAD-BEARING
LDR	LEADER
LED	LIGHT EMITTING DIODE
LF	LINEAR FEET (FOOT)
LH	LEFT HAND
LHR	LEFT HAND REVERSE OR LATENT HEAT RATIO
LIB	LIBRARY
LIN	LINEAR
LINO	LINOLEUM
LIQ	LIQUID
LKR	LOCKER
LKR RM	LOCKER ROOM
LKWASH	LOCKWASHER
LL	LEAD LINED
LLH	LONG LEG HORIZONTAL
LLV	LONG LEG VERTICAL
LMST	LIMESTONE
LNDSCP	LANDSCAPE
LR	LIVING ROOM
LRG	LARGE
LRV	LOUVERED ROOF VENT
LS	LUMP SUM
LT	LIGHT
LT GA	LIGHT GAGE
LT WT	LIGHTWEIGHT
LTG	LIGHTING
LTNG	LIGHTNING
LVD	LOUVERED
LVR	LOUVER
LWC	LIGHTWEIGHT CONCRETE
LWIC	LIGHTWEIGHT INSULATING CONCRETE
LYR	LAYER
M	
MACH	MACHINE
MACH RM	MACHINE ROOM
MAINT	MAINTAIN, MAINTENANCE
MAN	MANUAL
MATL	MATERIAL
MATV	MASTER ANTENNA TELEVISION SYSTEM
MAX	MAXIMUM
MB	MACHINE BOLT
MCB	METAL CORNER BEAD
MD	DECK
ME	MECHANICAL ENGINEER
MEAS	MEASURE
MECH	MECHANICAL
MECH RM	MECHANICAL ROOM
MED	MEDICAL MEDIUM O MEDIUM MEDICAL
MEK	METHYL ETHYL KETONE
MEL	MELAMINE
MEMBO	MEMORANDUM
MEZZ	MEZZANINE
MF	MILL FINISH
MFD	MANUFACTURED
MFG	MANUFACTURING
MFR	MANUFACTURER
MFR REC	MANUFACTURER'S RECOMMENDATION
MGT	MANAGEMENT
MH	MANHOLE
MIC	MICROPHONE
MID	MIDDLE
MIL STD	MILITARY STANDARD
MIN	MINIMUM
MIN	MINIMUM MINUTE OR MINUTE MINIMUM
MIRR	MIRROR
MISC	MISCELLANEOUS
MISC	MISCELLANEOUS
MIT	MITER
MKR	MARKER
ML	METAL LATH
MLDG	MOLDING (MOULDING)
MLWK	MILLWORK
mm	MILLIMETER
MO	MASONRY OPENING OR MOTOR OPERATED
MOD	MODEL, MODIFY OR MODULE
MOD BIT	MODIFIED BITUMEN
MON	MONITOR
MOPR	MOP RACK
MR	MOISTURE RESISTANT
MS	MACHINE SCREW OR MOP SINK
MTD	MOUNTED
MTG	MOUNTING
MTL	METAL
MULL	MULLION
MW	MICROWAVE
MWP	MEMBRANE WATERPROOFING
N	
N	NORTH
NA	NOT APPLICABLE
NAAMM	NATIONAL ASSOCIATION OF ARCHITECTURAL METAL MANUFACTURERS
NAT	NATURAL
NATL	NATIONAL
NC	NOISE CRITERIA
NCOMBL	NONCOMBUSTIBLE
NEC	NATIONAL ELECTRICAL CODE
NEG	NEGATIVE
NEMA	NATIONAL ELECTRICAL MANUFACTURERS ASSOCIATION
NEUT	NEUTRAL
NFC	NATIONAL FIRE CODE
NFPA	NATIONAL FIRE PROTECTION ASSOCIATION
NIC	NOT IN CONTRACT
NO	NUMBER
NOM	NOMINAL
NR	NOISE REDUCTION
NRC	NOICE REDUCTION COEFFICIENT
NRCA	NATIONAL ROOFING CONTRACTORS ASSOCIATION
NRP	NONREMOVABLE
NS	NARROW STILE
NUM	NUMERAL
O	
O	OXYGEN
O/H	OVER HEAD
O/O	OUT TO OUT
OA	OUTSIDE AIR OR OVERALL
OC	ON CENTER
OCC	OCCUPY
OCT	OCTAGON
OD	OUTSIDE DIAMETER OR OUTSIDE DIMENSION
OFD	OVERFLOW DRAIN
OFF	OFFICE
OH	OVERHANG
OH DR	OVERHEAD (COILING) DOOR
OPH	OPPOSIE HAND
OPNG	OPENING
OPP	OPPOSITE
OPR	OPERABLE
OPT	OPTIONAL
OR	OPERATING ROOM OR OUTSIDE RADIUS
ORD	ORDNANCE OR OVERFLOW ROOF DRAIN
ORG	ORGANIC
ORIG	ORIGINAL
ORN	ORNAMENTAL
OSHA	OCCUPATIONAL SAFETY AND HEALTH ADMINISTRATION
OUT	OUTLET
OZ	OUNCE
P	
PAR	PARALLEL OR PARAPET
PARA	PARAGRAPH
PART	PARTIAL
PAT	PATTERN
PB	PUSHBUTTON
PBD	PARTICLEBOARD
PC	PIECE, POLYCARBONATE OR PORTLAND CEMENT
PCA	PORTLAND CEMENT ASSOCIATION
PCC	PRECAST CONCRETE
PCCP	CONCRETE PAVEMENT
PCD	PAPER CUP DISPENSER
PCF	POUNDS PER CUBIC FOOT
PCP	PORTLAND CEMENT PLASTER
PED	PEDESTAL
PEN	PENETRATE
PEND	PENDANT
PERF	PERFORATED
PERIM	PERIMETER
PERP	PERPENDICULAR
PGBD	PEGBOARD
PHAR	PHARMACY
PHOTO	PHOTOGRAPH
PHS	PHILLIPS HEAD SCREW
PKG	PACKAGE
PL	PROPERTYLINE
PL GL	PLATE GLASS
PLAM	PLASTIC LAMINATE
PLAS	PLASTER OR PLASTIC
PLBG	PLUMBING
PLYWD	PLYWOOD
PMTL	PAINTED METAL
PNEU	PNEUMATIC
PNL	PANEL
PO	POST OFFICE PURCHASE ORDER OR PURCHASE ORDER POST OFFICE
POLY	POLYETHYLENE (PLASTIC)
PR	PAIR
PRCST	PRECAST
PREFAB	PREFABRICATE
PREFIN	PREFINISH
PRELIM	PRELIMINARY
PREP	PREPARATION
PRESS	PRESSURE
PREV	PREVIOUS
PRKG	PARKING
PRMLD	PREMOLDED
PROJ	PROJECT
PROP	PROPERTY
PSF	POUNDS PER SQUARE FOOT
PSI	POUNDS PER SQUARE INCH
PT	PAINT, PNEUMAIC TUBE, OR PRESSURE TREATED
PTD	PAPER TOWEL DISPENSER
PTN	PARTITION
PVC	POLYVINYL CHLORIDE (PLASTIC)
PVG	PAVING
PWR	POWER
Q	
QA	QUALITY ASSURANCE
QC	QUALITY CONTROL
QRY	QUARRY
QT	QUARRY TILE OR QUART
QTB	QUARRY TILE BASE
QTF	QUARRY TILE FLOOR
QTR	QUARTER
QTY	QUANTITY
QUAD	QUADRANT
QUAL	QUALITY
R	
R	RADIUS OR RISER
RA	RETURN AIR
RA	RETURN AIR
RAD	RADIATOR
RB	RESILIENT BASE OR RUBBER BASE
RB HK	ROBE HOOK
RBM	REINFORCED BRICK MASONRY
RBR	RUBBER
RC	REMOTE CONTROL
RCP	REFLECTED CEILING PLAN
RCVR	RECEIVER
RD	ROAD OR ROOF DRAIN
REC	RECESSED
RECD	RECEIVED
RECPT	RECEPTACLE
RECT	RECTANGLE
REF	REFERENCE OR REFRIGERATOR
REFR	REFRACTORY REFRIGERATION OR REFRIGERATION REFRACTORY
REG	REGISTER
REINF	REINFORCE, REINFORCED, OR REINFORCING
REP	REPAIR
REPL	REPLACE
REQ	REQUIRE
REQD	REQUIRED
RESIL	RESILIENT
RET	RETURN
REV	REVISION
RF	RADIO FREQUENCY
RFG	ROOFING
RFI	REQUEST FOR INFORMATION
RFP	REQUEST FOR PROPOSAL
RH	RIGHT HAND
RHMS	ROUND HEAD MACHINE SCREW
RHR	RIGHT HAND REVERSE
RHWS	ROUND HEAD WOOD SCREW
RL	ROOF LEADER
RLG	RAILING
RM	ROOM
RND	ROUND
RO	ROUGH OPENING
ROW	RIGHT OF WAY
RPM	REVOLUTIONS PER MINUTE
RS	ROUGH SAWN
RT	RIGHT
RV	ROOF VENT
RVS	REVERSE
RWD	REDWOOD
RWL	RAIN WATER LEADER
S	
SA	SUPPLY AIR
SALV	SALVAGE
SAMP	SAMPLE
SAN	SANITARY
SAT	SUSPENDED ACOUSTICAL TILE
SATC	SUSPENDED ACOUSTICAL TILE CEILING
SB	SPLASH BLOCK
SBS	STYRENE BUTADIEN STYRENE
SBSTR	SUBSTRATE
SC	SHADING COEFFICIENT OR SOLID CORE
SCH	SCHOOL
SCHED	SCHEDULE, SCHEDULED
SCHEM	SCHEMATIC
SCP	SCUPPER
SCRN	SCREEN
SCT	STRUCTURAL CLAY TILE
SCWD	SOLID CORE WOOD DOOR
SD	SHOP DRAWINGS, SMOKE DETECTOR, OR SOAP DISPENSER
SDG	SIDING
SECT	SECTION
SEG	SEGMENT
SEL	SELECT
SEP	SEPARATE
SF	SQUARE FOOT (FEET)
SFTWD	SOFTWOOD
SGD	SLIDING GLASS DOOR
SGL	SINGLE
SHR	SHOWER
SHR HD	SHOWER HEAD
SHRD	SHOWER DRAIN
SHT	SHEET
SHT MTL FLASH	SHEET METAL (FLASHING)
SHTHG	SHEATHING
SIM	SIMILAR
SJ	SCORED JOINT
SJ	SCORED JOINT
SJI	STEEL JOIST SLIDING WINDOW
SK	SKETCH
SKLT	SKYLIGHT
SLD WDW	HORIZONTAL SLIDING WINDOW
SLDG	SLIDING
SLNT	SEALANT
SM	SHEET METAL
SMK	SMOKE
SMS	SHEET METAL SCREW
SND	SANITARY NAPKIN DISPENSER
SND INS	SOUND INSULATION
SNDU	SANITARY NAPKIN DISPOSAL UNIT
SPEC	SPECIFICATION
SPKLR	SPRINKLER
SPKR	SPEAKER
SPLY	SUPPLY
SQ	SQUARE
SQ IN	SQUARE INCH
SQ YD	SQUARE YARD
SS	SANITARY SEWER OR SERVICE SINK
SST	STAINLESS STEEL
ST	STAIRS OR STREET
STC	SOUND TRANSMISSION CLASSIFICATION
STIF	STIFFENER
STL	STEEL
STL JST	STEEL JOIST
STL LNTL	STEEL LINTEL
STL PL	STEEL PLATE
STL RF DK	STEEL ROOF DECK
STL TB	STEEL TUB
STL TR	STEEL TRUSS
STNLS	STAINLESS
STOR	STORAGE
STR	STRINGERS
STRUCT	STRUCTURAL
STRUCT STL	STRUCTURAL STEEL
SUB	SUBSTITUTE
SURF	SURFACE
SUSP	SUSPENDED
SUSP CLG	SUSPENDED CEILING
SV	SHEET VINYL
SW	SWITCH
SWDR	SWING DOOR
SYM	SYMBOL
SYNTH	SNTHETIC
SYS	SYSTEM
T	
T	TREAD
T&G	TONGUE AND GROOVE
T&M	TIME AND MATERIALS
TB	THROUGH BOLT OR TOWEL BAR
TCA	TILE COUNCIL OF AMERICA
TCP	TELEPHONE CONTROL PANEL, TEMPERATURE CONTROL PANEL, OR TRAFFIC CONTROL PLAN
TD	TOWEL DISPENSER
TECH	TECHNICAL
TEL	TELEPHONE
TEMP	TEMPERATURE OR TEMPORARY
TER	TERRAZZO
THD	THREAD
THERM	THERMAL
THK	THICKNESS
THRES	THRESHOLD
THRU	THROUGH
THRUOUT	THROUGHOUT
TK BD	TACKBOARD
TLT	TOILET
TMPD	TEMPERED
TMPD GL	TEMPERED GLASS
TN	TRUE NORTH
TO	TOP OF ______
TO FDN	TOP OF FOUNDATION
TOB	TOP OF BEAM
TOM	TOP OF MASONRY
TOP	TOP OF PARAPET
TOS	TOP OF STEEL
TYP	TYPICAL
U	
U.N.O.	UNLESS NOTED OTHERWISE
U.O.N.	UNLESS OTHERWISE NOTED
V	
VC	VA FURNISHED / CONTRACTOR INSTALLED
VCT	VINYL COMPOSITION TILE OR VITRIFIED CLAY TILE
VENT	VENTILATION
VERT	VERTICAL
VIF	VERIFY IN FIELD
VV	VA FURNISHED / VA INSTALLED
W	
W/	WITH
WD	WOOD
WP	WALL PROTECTION

Revisions: Date:

CONSULTANTS

FIRE PROTECTION
FP&C CONSULTANTS KC, LLC
1330 BURLINGTON STREET, STE. 200
NORTH KANSAS CITY, MO 64116

SECURITY
GRW
801 CORPORATE DRIVE
LEXINGTON, KY 40503

CIVIL ENGINEER
HODGES ENGINEERING
231 SHORELINE DRIVE
MOUNTAIN HOME, AR 72653

STRUCTURAL ENGINEER
BERNHARD TME
BUILDING 2, 1 ALLIED DRIVE
SUITE 260
LITTLE ROCK, AR 72202

ARCHITECT/ENGINEER OF RECORD

A/E
JohnsonDanforth & Associates
2200 N. RODNEY PARHAM ROAD
SUITE 210
LITTLE ROCK, AR 72212
501-404-4811
jda@JohnsonDanforth.com
JDA PROJECT #: 2018.001

STAMP
STATE OF ALABAMA
DANIEL E. BUSH
NO. 6658
REGISTERED ARCHITECT
Digitally signed by Daniel E. Bush
Date: 2022.07.11 16:16:15-04'00'

Office of Construction and Facilities Management
VA U.S. Department of Veterans Affairs

Drawing Title: STANDARD ABBREVIATIONS
Approved: Project Director

Phase: CONSTRUCTION DOCUMENTS
FULLY SPRINKLERED

Project Title: CONSTRUCT NEW WATER STORAGE FACILITY
Location: FAYETTEVILLE, AR
Issue Date: 2022.07.15 | Checked: BUSH | Drawn: DEB

Project Number: 564-19-101
Building Number: 39
Drawing Number: GI003

VA FORM 08 - 6231

E:\dropbox_ARCHITECTURE_BIM ASSIST_PROJECTS\JDA\jda21.002 564-19-101 Faytteville Water Storage\BIM\564-19-101_Fayetteville Water Storage_Arch.r22.rvt
7/11/2022 5:35:38 PM

CODE SUMMARY

APPLICABLE CODES IN ORDER OF PRECEDENCE:

VETERANS AFFAIRS "FIRE PROTECTION DESIGN MANUAL", CURRENT EDITION
NFC CODES, CURRENT EDITION

OCCUPANCY CLASSIFICATION: NFPA: INDUSTRIAL, GENERAL
IBC: UTILITY

STRUCTURE IS FULLY SPRINKLED PER PSDM AND FPDM

CONSTRUCTION TYPE: NFPA: II (000)
IBC: II-B

CONSTRUCTION TYPE LIMITATIONS

NFPA: NONE (40.1.6)
IBC:

- BUILDING AREA (PROPOSED / PERMITTED): 775 SF / 8,500 SF
- NO. OF STORIES (PROPOSED / PERMITTED): 1 STORY / 3
- HEIGHT (FT) TO ROOF (PROPOSED / PERMITTED): 18' / 55'

FIRE RESISTENCE RATING OF BUILDING ELEMENTS:

ELEMENT	REQUIRED RATING
PRIMARY STRUCTURAL FRAME	0
BEARING WALLS (NOTE 3)	
EXTERIOR	0 / 1 FOR WEST WALL
INTERIOR	0
NON-BEARING WALLS AND PARTITIONS	
EXTERIOR (NOTE 3)	0 / 1 FOR WEST WALL
INTERIOR	0
FLOOR CONSTRUCTION & SECONDARY MEMBERS	0
ROOF CONSTRUCTION & SECONDARY MEMBERS	0

OCCUPANT LOAD:

FROM NFPA 101 2018 T7.3.1.2 "OCCUPANT LOAD FACTOR":

INDUSTRIAL, GENERAL: 100 SF/OCCUPANT
GROSS FLOOR AREA: 775 SF
TOTAL OCCUPANT LOAD: 8 OCCUPANTS (775 SF/100)

TRAVEL DISTANCE AND COMMON PATH OF TRAVEL LIMITATIONS:

COMMON PATH OF TRAVEL (PROPOSED / PERMITTED): 50'
TRAVEL DISTANCE (PROPOSED / PERMITTED): 200'
DEAD END (PROPOSED / PERMITTED): 0/50'

HIGH-RISE / NOT HIGH-RISE: NOT HIGH RISE (3.3.37.7)

FIRE SEPARATION DISTANCE AND OPENING ALLOWANCES:

PER IBC 705.3, FOR MULTIPLE BUILDINGS ON THE SAME LOT, AN IMAGINARY LINE MUST BE STRUCK EQUADISTANCE BETWEEN THEM TO DETERMINE BUILDING SEPARATION DISTANCE.

PER IBC T602, A FIRE SEPARATION DISTANCE OF <5 FEET FOR GROUP I REQUIRES EXTERIOR WALLS TO HAVE A 1-HOUR RATING.

PER IBC T705.8, FOR BUILDING SEPARATION DISTANCE BETWEEN 3 AND 5 FEET, OPENINGS ARE LIMITED TO 15% OF WALL AREA.

EXPLANATORY NOTES:

1. FOR BUILDINGS WHERE NFPA 101 PROVIDES CONSTRUCTION REQUIREMENTS FOR ONE OR MORE OF THE OCCUPANCIES WITHIN THE BUILDING, THE TYPE OF CONSTRUCTION AS WELL AS THE HEIGHT FOR THE BUILDING MUST COMPLY WITH THE MOST RESTRICTIVE OCCUPANCY CONSTRUCTION REQUIREMENTS OF NFPA 101.
2. FOR BUILDINGS WHERE NFPA 101 DOES NOT PROVIDE CONSTRUCTION REQUIREMENTS FOR ANY OF THE OCCUPANCIES WITHIN THE BUILDING, THE CONSTRUCTION TYPE AS WELL AS HEIGHT AND AREA LIMITATIONS FOR THE BUILDING MUST COMPLY WITH THE REQUIREMENTS OF THE IBC.
   A. NOTE: THE HEIGHT AND AREA LIMITATIONS FOUND IN THE IBC WILL APPLY ONLY TO THOSE BUILDINGS WHERE ALL OCCUPANCIES WITHIN THE BUILDING HAVE NO CONSTRUCTION REQUIREMENTS IN NFPA 101. FOR EXAMPLE: USE OF THE IBC WILL RESTRICT THE HEIGHT AND AREA OF A TYPE V BUILDING CONTAINING A BUSINESS OCCUPANCY WHILE NFPA 101 WOULD PERMIT THE BUILDING TO BE OF UNLIMITED HEIGHT AND AREA. TYPICALLY, NEW CONSTRUCTION IN THE VA WILL REQUIRE THE BUILDING TO BE SPRINKLER PROTECTED AND THE LIMITATIONS IN THE IBC FOR FULLY SPRINKLER PROTECTED BUILDINGS SHOULD NOT BE OVERLY RESTRICTIVE.
3. THE REQUIREMENTS FOR FIRE RESISTANCE RATINGS OF EXTERIOR WALLS, MAXIMUM AREA FOR EXTERIOR WALL OPENINGS, AND OPENING PROTECTION MUST COMPLY WITH THE IBC (SEE NOTE 1) EXCEPT AS FOLLOWS:
   A. THERE ARE NO REQUIREMENTS FOR SEPARATION OR OPENINGS BETWEEN VA BUILDINGS WHEN BOTH (ALL) BUILDINGS ARE FULLY SPRINKLER PROTECTED. THIS EXCEPTION DOES NOT APPLY TO VA BUILDINGS THAT ARE ADJACENT TO NON-VA PROPERTY LINES.
   B. AS PERMITTED UNDER SECTION 2.9 OF VA FIRE PROTECTION DESIGN MANUAL. BUILDING SEPARATION REQUIREMENTS ARE FOUND IN TABLE 602 AND OPENING REQUIREMENTS ARE FOUND IN TABLE 705.8 OF THE IBC. WITH GREATER THAN 60 FEET OF SEPARATION BETWEEN BUILDINGS (OR GREATER THAN 30 FEET OF SEPARATION BETWEEN A BUILDING AND A PROPERTY LINE), THERE ARE NO REQUIREMENTS IN THE IBC. WITH ≤ 60 FEET OF SEPARATION BETWEEN BUILDINGS (OR ≤ 30 FEET OF SEPARATION BETWEEN A BUILDING AND A PROPERTY LINE) AND WHERE ANY ONE BUILDING IS NOT FULLY SPRINKLER PROTECTED, THE REQUIREMENTS IN THE IBC MUST BE FOLLOWED.
   C. AS A RESULT OF THE BUILDING SEPARATION REQUIREMENTS OF IBC, THE WEST WALL MUST HAVE A 1-HOUR RATING WITH RATED OPENINGS.

EGRESS DOOR SUMMARY

MARK	REQ'D WIDTH	ACTUAL WIDTH
101A	1"	2' - 8"
101E	19/32"	2' - 8"

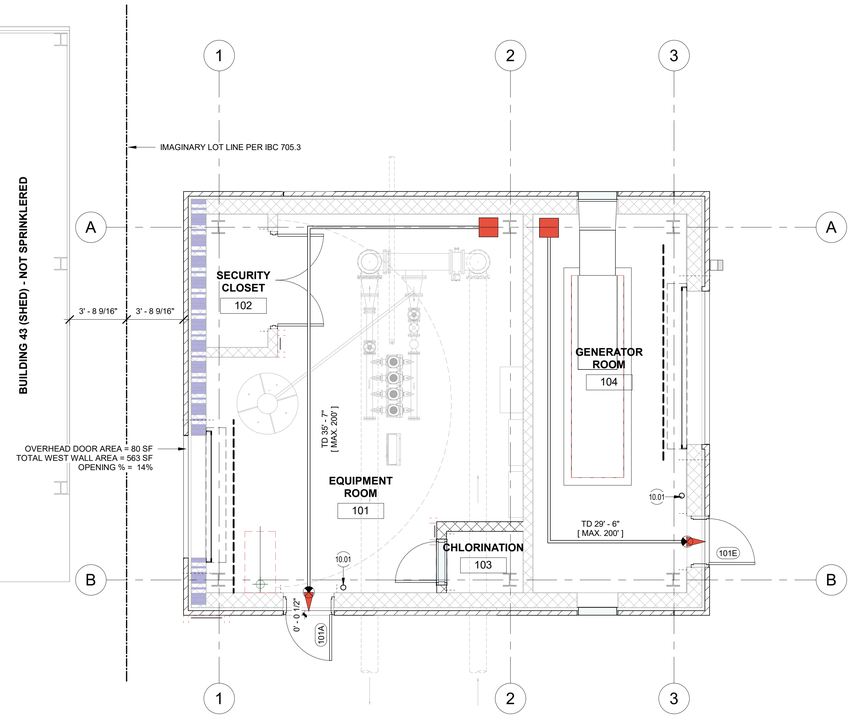

F6 **CODE PLAN**
1/4" = 1'-0"

N

0 2' 4' 8'
SCALE: 1/4" = 1'-0"

EGRESS LEGEND

INDICATES TERMINATION OF PATH @ POINT OF ACCESS TO PUBLIC WAY

INDICATES START OF PATH

INDICATES EXIT SIGNAGE - REF: ELECTRICAL. SHADED PORTION INDICATES LIT FACE

PARTITION LEGEND

NEW UNRATED PARTITION

NEW 1 HOUR CMU BARRIER UL U906

Revisions: Date:

VA FORM 08 - 6231

CONSULTANTS

FIRE PROTECTION
FP&C CONSULTANTS KC, LLC
1330 BURLINGTON STREET, STE. 200
NORTH KANSAS CITY, MO 64116

SECURITY
GRW
801 CORPORATE DRIVE
LEXINGTON, KY 40503

CIVIL ENGINEER
HODGES ENGINEERING
231 SHORELINE DRIVE
MOUNTAIN HOME, AR 72653

STRUCTURAL ENGINEER
BERNHARD TME
BUILDING 2, 1 ALLIED DRIVE
SUITE 260
LITTLE ROCK, AR 72202

ARCHITECT/ENGINEER OF RECORD

A/E
JohnsonDanforth & Associates
2200 N. RODNEY PARHAM ROAD
SUITE 210
LITTLE ROCK, AR 72212

501-404-4811
jda@JohnsonDanforth.com

JDA PROJECT #: 2018.001

STAMP
STATE OF ALABAMA
DANIEL E. BUSH
NO. 6658
REGISTERED ARCHITECT
Digitally signed by Daniel E. Bush
Date: 2022.08.17 13:48:28-04'00'

Office of Construction and Facilities Management

VA U.S. Department of Veterans Affairs

Drawing Title: CODE PLAN

Approved: Project Director

Phase: CONSTRUCTION DOCUMENTS

FULLY SPRINKLERED

Project Title: CONSTRUCT NEW WATER STORAGE FACILITY

Project Number: 564-19-101

Building Number: 39

Location: FAYETTEVILLE, AR

Drawing Number: GI101

Issue Date: 2022.07.15

Checked: BUSH

Drawn: DEB

E:\Vantage_ARCHITECTURE_BIM ASSIST_PROJECTS\DAN\ab21.002-564-19-101 Fayetteville Water Storage\BIM\564-19-101_Fayetteville Water Storage_Arch r22.rvt

7/17/2022 5:57:19 PM

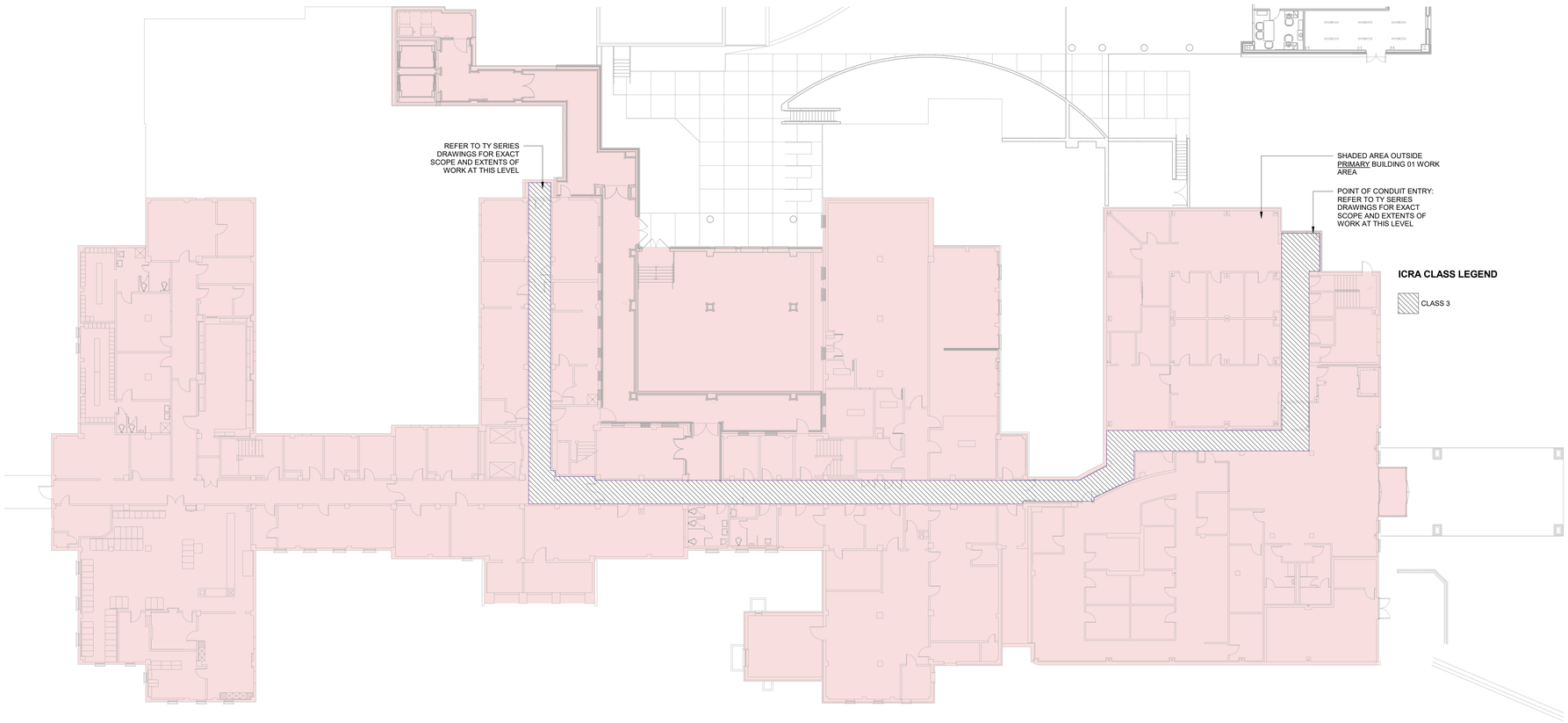

BUILDING 1 GROUND FLOOR ICRA PLAN

F1 1/16" = 1'-0"

GENERAL NOTES

1. REFER TO ICRA MATRIX ON SHEET GC103 FOR SUMMARY OF ICRA CONSTRUCTION/PROJECT ACTIVITIES, RISK GROUPS AND ICRA CLASS PRECAUTIONS. REFER TO SPECIFICATION SECTION 01 35 26 "SAFETY REQUIREMENTS" FOR FULL DETAILS OF REQUIREMENTS BY ICRA CLASS.
2. WORK LIMITS ARE TO ENCOMPASS ALL AREAS WITH REQUIRED WORK ACROSS ALL DISCIPLINES: CONTRACTOR TO FULLY FAMILIARIZE THEMSELVES WITH THE COMPLETE SET OF CONSTRUCTION DOCUMENTS AND THE INTENDED WORK.
3. ICRA CLASS(ES) SHOWN ARE CONCEPTUAL AND MAY BE USED AS A STARTING POINT FOR THE CONTRACTOR'S REQUIRED WORK UNDER SPECIFICATION SECTION 01 35 26 "SAFETY REQUIREMENTS".
4. CONTRACTORS ARE ENCOURAGED TO ATTEND ANY AND ALL SITE VISITS PROVIDED BY THE VA DURING BIDDING TO FAMILIARIZE THEMSELVES WITH THE AREAS OF WORK.
5. CONTRACTOR SHALL EXAMINE THE FULL SET OF PLANS AND DETERMINE IF THERE ARE ADDITIONAL AREAS OF WORK (AND ASSOCIATED ICRA CLASS(ES)) DURING BIDDING.
6. CONTRACTOR IS TO CONSIDER AND INCLUDE MONIES FOR REQUIRED WORK IN ALL PROJECT AREAS AS PART OF THEIR BASE BID.
7. IF CONTRACTOR IDENTIFIES POTENTIAL CONFLICTS OR LIMITATIONS IN THEIR ABILITY TO FULLY COMPLY WITH ICRA SAFETY REQUIREMENTS CONTAINED IN THE BIDDING DOCUMENTS, THEY SHALL SEEK RESOLUTION IN WRITING AS INDICATED IN BIDDING INSTRUCTIONS.
8. PROVIDE CONTAINMENT AS REQUIRED (BY HOSPITAL) INFECTION CONTROL REPRESENTATIVE FOR WORK OUTSIDE MAJOR AREA.
9. PROVIDE CONTAINMENT AT THE FLOOR BELOW FOR ANY WORK IN THE CEILING PLENUM.
10. PROVIDE TEMPORARY DOORS WITH GASKETING TO PREVENT THE TRANSFER OF DUST OUTSIDE WORK AREA.
11. PROVIDE TEMPORARY EMERGENCY EXITS FROM CONSTRUCTION ZONES; HOWEVER, ALL GENERAL CONSTRUCTION TRAFFIC SHOULD BE THROUGH VESTIBULE.
12. CONTRACTOR TO PROTECT ALL FINISHES INCLUDING (BUT NOT LIMITED TO) FLOORING, CEILING, WALL SURFACES, DOORS, AND DOOR FRAMES DURING THE MOVEMENT OF MATERIALS TO/FROM LIMIT OF WORK. COORDINATE WITH COR AND SPECIFICATIONS FOR PROCEDURES / REQUIREMENTS.

E:\danyhvd_ARCHITECTURE_BIM-ASSIST_PROJECTS\JDA\d421.002 564-19-101 Fayetteville Water Storage\BIM\564-19-101_Fayetteville Water Storage_Arch.rvt22.rvt 7/11/2022 5:55:45 PM

Revisions: Date:

VA FORM 08 - 6231

CONSULTANTS

FIRE PROTECTION
FP&C CONSULTANTS KC, LLC
1330 BURLINGTON STREET, STE. 200
NORTH KANSAS CITY, MO 64116

SECURITY
GRW
801 CORPORATE DRIVE
LEXINGTON, KY 40503

CIVIL ENGINEER
HODGES ENGINEERING
231 SHORELINE DRIVE
MOUNTAIN HOME, AR 72653

STRUCTURAL ENGINEER
BERNHARD TME
BUILDING 2, 1 ALLIED DRIVE
SUITE 260
LITTLE ROCK, AR 72202

ARCHITECT/ENGINEER OF RECORD

A/E
JohnsonDanforth & Associates
2200 N. RODNEY PARHAM ROAD
SUITE 210
LITTLE ROCK, AR 72212

501-404-4811
jda@JohnsonDanforth.com

JDA PROJECT #: 2018.001

STAMP
STATE OF ALABAMA DANIEL E. BUSH NO. 6658 REGISTERED ARCHITECT
Digitally signed by Daniel E. Bush
Date: 2022.07.11 18:16:28-04'00'

Office of Construction and Facilities Management

VA U.S. Department of Veterans Affairs

Drawing Title: BUILDING 1 GROUND FLOOR ICRA PLAN	Phase: CONSTRUCTION DOCUMENTS	Project Title: CONSTRUCT NEW WATER STORAGE FACILITY	Project Number: 564-19-101
Approved: Project Director	FULLY SPRINKLERED	Location: FAYETTEVILLE, AR	Building Number: 39
		Issue Date: 2022.07.15 / Checked: Checker / Drawn: Author	Drawing Number: GC101

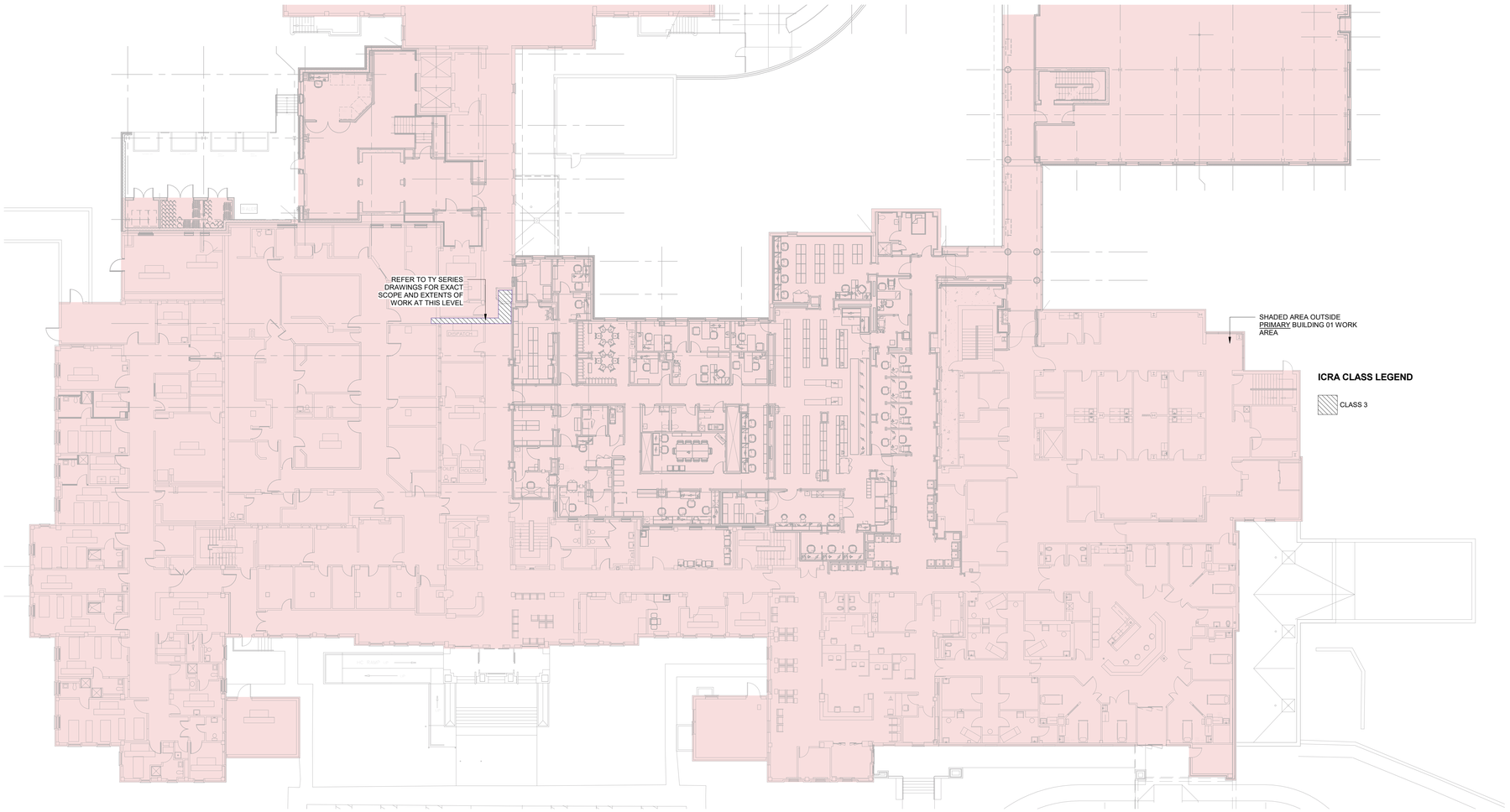

BUILDING 1 FIRST FLOOR ICRA PLAN

F1 1/16" = 1'-0"

GENERAL NOTES

1. REFER TO ICRA MATRIX ON SHEET GC103 FOR SUMMARY OF ICRA CONSTRUCTION/PROJECT ACTIVITIES, RISK GROUPS AND ICRA CLASS PRECAUTIONS. REFER TO SPECIFICATION SECTION 01 35 26 "SAFETY REQUIREMENTS" FOR FULL DETAILS OF REQUIREMENTS BY ICRA CLASS.
2. WORK LIMITS ARE TO ENCOMPASS ALL AREAS WITH REQUIRED WORK ACROSS ALL DISCIPLINES: CONTRACTOR TO FULLY FAMILIARIZE THEMSELVES WITH THE COMPLETE SET OF CONSTRUCTION DOCUMENTS AND THE INTENDED WORK.
3. ICRA CLASS(ES) SHOWN ARE CONCEPTUAL AND MAY BE USED AS A STARTING POINT FOR THE CONTRACTOR'S REQUIRED WORK UNDER SPECIFICATION SECTION 01 35 26 "SAFETY REQUIREMENTS".
4. CONTRACTORS ARE ENCOURAGED TO ATTEND ANY AND ALL SITE VISITS PROVIDED BY THE VA DURING BIDDING TO FAMILIARIZE THEMSELVES WITH THE AREAS OF WORK.
5. CONTRACTOR SHALL EXAMINE THE FULL SET OF PLANS AND DETERMINE IF THERE ARE ADDITIONAL AREAS OF WORK (AND ASSOCIATED ICRA CLASS(ES)) DURING BIDDING.
6. CONTRACTOR IS TO CONSIDER AND INCLUDE MONIES FOR REQUIRED WORK IN ALL PROJECT AREAS AS PART OF THEIR BASE BID.
7. IF CONTRACTOR IDENTIFIES POTENTIAL CONFLICTS OR LIMITATIONS IN THEIR ABILITY TO FULLY COMPLY WITH ICRA SAFETY REQUIREMENTS CONTAINED IN THE BIDDING DOCUMENTS, THEY SHALL SEEK RESOLUTION IN WRITING AS INDICATED IN BIDDING INSTRUCTIONS.
8. PROVIDE CONTAINMENT AS REQUIRED (BY HOSPITAL) INFECTION CONTROL REPRESENTATIVE FOR WORK OUTSIDE MAJOR AREA.
9. PROVIDE CONTAINMENT AT THE FLOOR BELOW FOR ANY WORK IN THE CEILING PLENUM.
10. PROVIDE TEMPORARY DOORS WITH GASKETING TO PREVENT THE TRANSFER OF DUST OUTSIDE WORK AREA.
11. PROVIDE TEMPORARY EMERGENCY EXITS FROM CONSTRUCTION ZONES; HOWEVER, ALL GENERAL CONSTRUCTION TRAFFIC SHOULD BE THROUGH VESTIBULE.
12. CONTRACTOR TO PROTECT ALL FINISHES INCLUDING (BUT NOT LIMITED TO) FLOORING, CEILING, WALL SURFACES, DOORS, AND DOOR FRAMES DURING THE MOVEMENT OF MATERIALS TO/FROM LIMIT OF WORK. COORDINATE WITH COR AND SPECIFICATIONS FOR PROCEDURES / REQUIREMENTS.

E:\Revit\1_ARCHITECTURE_BIM-ASSIST_PROJECTS\JDA\Id21.002 564-19-101 Fayetteville Water Storage\BIM564-19-101_Fayetteville Water Storage_Arch r22.rvt

7/11/2022 5:55:55 PM

Revisions: Date:

VA FORM 08 - 6231

CONSULTANTS

FIRE PROTECTION
FP&C CONSULTANTS KC, LLC
1330 BURLINGTON STREET, STE. 200
NORTH KANSAS CITY, MO 64116

SECURITY
GRW
801 CORPORATE DRIVE
LEXINGTON, KY 40503

CIVIL ENGINEER
HODGES ENGINEERING
231 SHORELINE DRIVE
MOUNTAIN HOME, AR 72653

STRUCTURAL ENGINEER
BERNHARD TME
BUILDING 2, 1 ALLIED DRIVE
SUITE 260
LITTLE ROCK, AR 72202

ARCHITECT/ENGINEER OF RECORD

A/E
JohnsonDanforth & Associates
2200 N. RODNEY PARHAM ROAD
SUITE 210
LITTLE ROCK, AR 72212

501-404-4811
jda@JohnsonDanforth.com

JDA PROJECT #: 2018.001

STAMP

STATE OF ALABAMA
DANIEL E. BUSH
NO. 6658
REGISTERED ARCHITECT

Digitally signed by Daniel E. Bush
Date: 2022.07.11 18:14:10-04'00'

Office of Construction and Facilities Management

VA U.S. Department of Veterans Affairs

Drawing Title: **BUILDING 1 FIRST FLOOR ICRA PLAN**

Approved: Project Director

Phase: **CONSTRUCTION DOCUMENTS**

FULLY SPRINKLERED

Project Title: **CONSTRUCT NEW WATER STORAGE FACILITY**

Location: **FAYETTEVILLE, AR**

Issue Date: 2022.07.15

Checked: Checker

Drawn: Author

Project Number: **564-19-101**

Building Number: **39**

Drawing Number: **GC102**

1 2 3 4 5 6 7 8 9 10

TYPE OF CONTRUCTION/PROJECT ACTIVITY TABLE

TYPE A	INSPECTION AND NON-INVASIVE ACTIVITIES INCLUDES BUT IS NOT LIMITED TO: ● REMOVAL OF CEILING TILES FOR VISUAL INSPECTION LIMITED TO 1 TILE IN 50 SQUARE FEET ● PAINTING (BUT NOT SANDING), WALL COVERING ● ELECTRICAL TRIM WORK, MINOR PLUMBING, AND ACTIVITIES THAT DO NOT GENERATE DUST OR REQUIRE CUTTING OF WALLS OR ACCESS TO CEILINGS OTHER THAN FOR VISUAL INSPECTION
TYPE B	SMALL SCALE, SHORT DURATION ACTIVITIES THAT CREATE MINIMAL DUST INCLUDES BUT IS NOT LIMITED TO: ● INSTALLATION OF TELEPHONE AND COMPUTER CABLING ● ACCESS TO CHASE SPACES ● CUTTING OF WALLS OR CEILING WHERE DUST MIGRATION CAN BE CONTROLLED
TYPE C	WORK THAT GENERATES A MODERATE TO HIGH LEVEL OF DUST OR REQUIRES DEMOLITION OR REMOVAL OF ANY FIXED BUILDING COMPONENTS OR ASSEMBLIES INCLUDES BUT IS NOT LIMITED TO: ● SANDING OF WALLS FOR PAINTING OR WALL COVERING ● REMOVAL OF FLOOR COVERINGS, CEILING TILES AND CASEWORK ● NEW WALL CONSTRUCTION ● MINOR DUCT WORK OR ELECTRICAL WORK ABOVE CEILINGS ● MAJOR CABLING ACTIVITIES ● ANY ACTIVITY THAT CANNOT BE COMPLETED WITHIN A SINGLE WORK SHIFT
TYPE D	MAJOR DEMOLITION AND CONSTRUCTION PROJECTS INCLUDES BUT IS NOT LIMITED TO: ● ACTIVITIES THAT REQUIRE CONSECUTIVE WORK SHIFTS ● REQUIRES HEAVY DEMOLITION OR REMOVAL OF A COMPLETE CEILING SYSTEM ● NEW CONSTRUCTION

PATIENT RISK GROUP TABLE

GROUP 1-LOW RISK	GROUP 2-MEDIUM RISK
● OFFICE AREAS (NON-CLINICAL)	● CARDIOLOGY ● ECHOCARDIOLOGY ● ENDOSCOPY-GI ● PHYSICAL THERAPY ● RADIOLOGY/MRI ● NUCLEAR MEDICINE ● RESPIRATORY CARE (EXCEPT BRONCHOSCOPY AREA) ● CAFETERIA ● OUTPATIENT AREAS-CLINICS AND OFFICES (EXCEPTION: TRANSPLANT AND ONCOLOGY)
GROUP 3-HIGH RISK	**GROUP 4-HIGHEST RISK**
● EMERGENCY ROOM ● POST ANESTHESIA ● CARE UNITS ● LABOR AND DELIVERY ● PEDIATRICS ● ADMISSION/DISCHARGE AREA ● LABORATORIES ● PHARMACY ● INPATIENT UNITS (NOT OTHERWISE SPECIFIED)	● ALL OPERATING ROOMS INCLUDING LABOR AND DELIVERY ● ANESTHESIA AND PUMP AREAS ● CENTRAL EQUIPMENT/STERILE SUPPLY ● CARDIAC CATHETERIZATION AND ANGIOGRAPHY AREAS ● INTERVENTIONAL RADIOLOGY ● RADIATION ONCOLOGY ● ALL INTENSIVE CARE UNITS ● NEWBORN NURSERIES, INCLUDING NICU ● DIALYSIS UNIT ● ONCOLOGY-INPATIENT AND OUTPATIENT ● TRANSPLANT-INPATIENT AND OUTPATIENT ● PHARMACY ADMIXTURE ● NEGATIVE PRESSURE ISOLATION ROOMS/AREAS (INCLUDING BRONCHOSCOPY AREA)

INFECTION CONTROL MATRIX-CLASS OF PRECAUTIONS: CONSTRUCTION PROJECT BY PATIENT RISK

PATIENT RISK GROUP		TYPE A	TYPE B	TYPE C	TYPE D
LOW	RISK GROUP 1	I	II	II	III / IV
MEDIUM	RISK GROUP 2	I	II	III	IV
HIGH	RISK GROUP 3	I	III	III / IV	IV
HIGHEST	RISK GROUP 4	III	III / IV	III / IV	IV

NOTE: INFECTION CONTROL APPROVAL WILL BE REQUIRED WHEN THE CONSTRUCTION ACTIVITY AND RISK LEVEL INDICATE THAT CLASS III OR CLASS IV CONTROL PROCEDURES ARE NECESSARY.

ICRA GENERAL NOTES

A. PROVIDE CONTAINMENT AS REQUIRED (BY HOSPITAL) INFECTION CONTROL REPRESENTATIVE FOR WORK OUTSIDE MAJOR AREA.
B. PROVIDE CONTAINMENT AT THE FLOOR BELOW FOR ANY WORK IN THE CEILING PLENUM.
C. PROVIDE TEMPORARY DOOR WITH GASKETING TO PREVENT THE MOVEMENT OF DUST.
D. PROVIDE TEMPORARY EMERGENCY EXIT FROM CONSTRUCTION ZONE; HOWEVER, ALL GENERAL CONSTRUCTION TRAFFIC SHOULD BE THROUGH VESTIBULE.
E. CONTRACTOR TO PROTECT ALL FINISHES INCLUDING (BUT NOT LIMITED TO) FLOORING, CEILING, WALL SURFACES, DOORS, AND DOOR FRAMES DURING THE MOVEMENT OF MATERIALS TO/FROM LIMIT OF WORK. COORDINATE WITH COR AND SPECIFICATIONS FOR PROCEDURES/REQUIREMENTS.

IT IS THE CONTRACTOR'S RESPONSIBILITY TO PROVIDE THE FOLLOWING INFECTION CONTROL PRECAUTIONS DEPENDING UPON THE AREA CLASS DESIGNATION

DURING CONSTRUCTION PROJECT	UPON COMPLETION OF PROJECT
CLASS I 1. EXECUTE WORK BY METHODS TO MINIMIZE RAISING DUST FROM CONSTRUCTION OPERATIONS. 2. IMMEDIATELY REPLACE A CEILING TILE DISPLACED FOR VISUAL INSPECTION.	1. WIPE SURFACES TO REMOVE DUST.
CLASS II 1. INCLUDES ALL ACTIVITIES REQUIRED BY CLASS I. 2. PROVIDE ACTIVE MEANS TO PREVENT AIRBORNE DUST FROM DISPERSING INTO ATMOSPHERE. 3. WATER MIST WORK SURFACES TO CONTROL DUST WHILE CUTTING. 4. SEAL UNUSED DOORS WITH DUCT TAPE. 5. BLOCK OFF AND SEAL AIR VENTS. 6. REPLACE ADHESIVE WALK-OFF MATS AT ENTRANCE AN EXIT OF WORK AREA. REPLACE USED MATS IN ACCORDANCE WITH MANUFACTURER'S RECOMMENDATIONS. 7. REMOVE OR ISOLATE HVAC SYSTEM IN AREAS WHERE WORK IS BEING DONE TO PREVENT CONTAMINATION OF DUCT SYSTEM.	1. WIPE WORK SURFACES WITH DISINFECTANT. 2. CONTAIN CONSTRUCTION WASTE BEFORE TRANSPORT IN TIGHTLY COVERED CONTAINERS. 3. WET MOP AND/OR VACUUM WORK AREA WITH HEPA FILTERED VACUUM BEFORE LEAVING WORK AREAS. 4. REMOVE ISOLATION OF HVAC SYSTEM IN AREAS WHERE WORK WAS BEING PERFORMED.
CLASS III 1. INCLUDES ALL ACTIVITIES REQUIRED BY CLASS II. 2. OBTAIN INFECTION CONTROL PERMIT FROM HOSPITAL SAFETY OFFICER OR FACILITIES MANAGEMENT MAINTENANCE AND ENGINEERING DEPARTMENT BEFORE CONSTRUCTION BEGINS. 3. REMOVE OR ISOLATE HVAC SYSTEM IN AREA WHERE WORK IS BEING DONE TO PREVENT CONTAMINATION OF DUCT SYSTEM. 4. COMPLETE ALL CRITICAL BARRIERS BEFORE CONSTRUCTION BEGINS OR IMPLEMENT CONTROL CUBE METHOD. 5. MAINTAIN NEGATIVE AIR PRESSURE WITHIN WORK SITE UTILIZING HEPA-EQUIPPED AIR FILTRATION UNITS. 6. CONTAIN CONSTRUCTION WASTE BEFORE TRANSPORT IN TIGHTLY COVERED CONTAINERS. 7. COVER TRANSPORT RECEPTACLES OR CARS. TAPE COVERS. 8. WET MOP AND/OR VACUUM WITH HEPA FILTERED VACUUM BEFORE LEAVING WORK AREAS. 9. REMOVE ISOLATION OF HVAC SYSTEM IN AREAS WHERE WORK IS BEING PERFORMED.	1. REMOVE BARRIER MATERIALS CAREFULLY TO MINIMIZE SPREADING OF DIRT AND DEBRIS ASSOCIATED WITH CONSTRUCTION. 2. CONTAIN CONSTRUCTION WASTE BEFORE TRANSPORT IN TIGHTLY COVERED CONTAINERS. 3. COVER TRANSPORT RECEPTACLES OR CARTS. TAPE COVERING. 4. VACUUM WORK WITH HEPA-FILTERED VACUUMS. 5. WET MOP WITH DISINFECTANT. 6. REMOVE ISOLATION OF HVAC SYSTEM IN AREAS WHERE WORK WAS BEING PERFORMED.

CLASS IV	
1. INCLUDES ALL ACTIVITIES REQUIRED BY CLASS III. 2. OBTAIN INFECTION CONTROL PERMIT FROM HOSPITAL SAFETY OFFICER OR FACILITIES MANAGEMENT MAINTENANCE AND ENGINEERING DEPARTMENT BEFORE CONSTRUCTION BEGINS. 3. ISOLATE HVAC SYSTEM IN AREAS WHERE WORK IS BEING DONE TO PREVENT CONTAMINATION OF DUCT SYSTEM. 4. COMPLETE ALL CRITICAL BARRIERS OR IMPLEMENT CONTROL CUBE METHOD BEFORE CONSTRUCTION BEGINS. 5. MAINTAIN NEGATIVE AIR PRESSURE WITHIN WORK SITE UTILIZING HEPA-EQUIPPED AIR FILTRATION UNITS. 6. SEAL HOLES, PIPES, CONDUITS, AND PUNCTURES APPROPRIATELY. CONSTRUCT ANTEROOM AND REQUIRE ALL PERSONNEL TO PASS-THROUGH THIS ROOM SO THEY CAN BE VACUUMED USING A HEPA VACUUM CLEANER BEFORE LEAVING WORK SITE OR THEY CAN WEAR CLOTH OR PAPER COVERALLS THAT ARE REMOVED EACH TIME THEY LEAVE THE WORK SITE. 7. ALL PERSONNEL ENTERING WORK SITE ARE REQUIRED TO WEAR SHOE COVERS. SHOE COVERS MUST BE CHANGED EACH TIME THE WORKER EXITS THE WORK AREA. 8. PLACE ADHESIVE WALK-OFF MATS AT ENTRANCE TO WORK AREA WITH ANTEROOM. REPLACE PER MANUFACTURER'S RECOMMENDATIONS. 9. DO NOT REMOVE BARRIERS FROM WORK AREA UNTIL COMPLETED PROJECT IS INSPECTED EACH BY THE HOSPITAL SAFETY OFFICER, FACILITIES MANAGEMENT MAINTENANCE AND ENGINEERING DEPARTMENT AND THOROUGHLY CLEANED BY THE HOSPITAL ENVIRONMENTAL SERVICES DEPARTMENT OR THEIR CONTRACTED ENVIRONMENTAL SERVICES COMPANY. 10. CONTAIN CONSTRUCTION WASTE BEFORE TRANSPORT IN TIGHTLY COVERED CONTAINERS. 11. COVER TRANSPORT RECEPTACLES OR CARS. TAPE COVERING. 12. VACUUM WITH HEPA FILTERED VACUUM. WET MOP WITH DISINFECTANT AFTER BARRIERS ARE REMOVED. 13. REMOVE ISOLATION OF HVAC SYSTEM IN AREAS WHERE WORK IS BEING PERFORMED.	1. REMOVE BARRIER MATERIALS CAREFULLY TO MINIMIZE SPREADING OF DIRT AND DEBRIS ASSOCIATED WITH CONSTRUCTION. 2. CONTAIN CONSTRUCTION WASTE BEFORE TRANSPORT IN TIGHTLY COVERED CONTAINERS. 3. COVER TRANSPORT RECEPTACLES OR CARTS. TAPE COVERING. 4. VACUUM WORK WITH HEPA-FILTERED VACUUMS. 5. WET MOP WITH DISINFECTANT AFTER BARRIERS ARE REMOVED. 6. REMOVE ISOLATION OF HVAC SYSTEM IN AREAS WHERE WORK WAS BEING PERFORMED.

F1 **ICRA MATRIX**
12" = 1'-0"

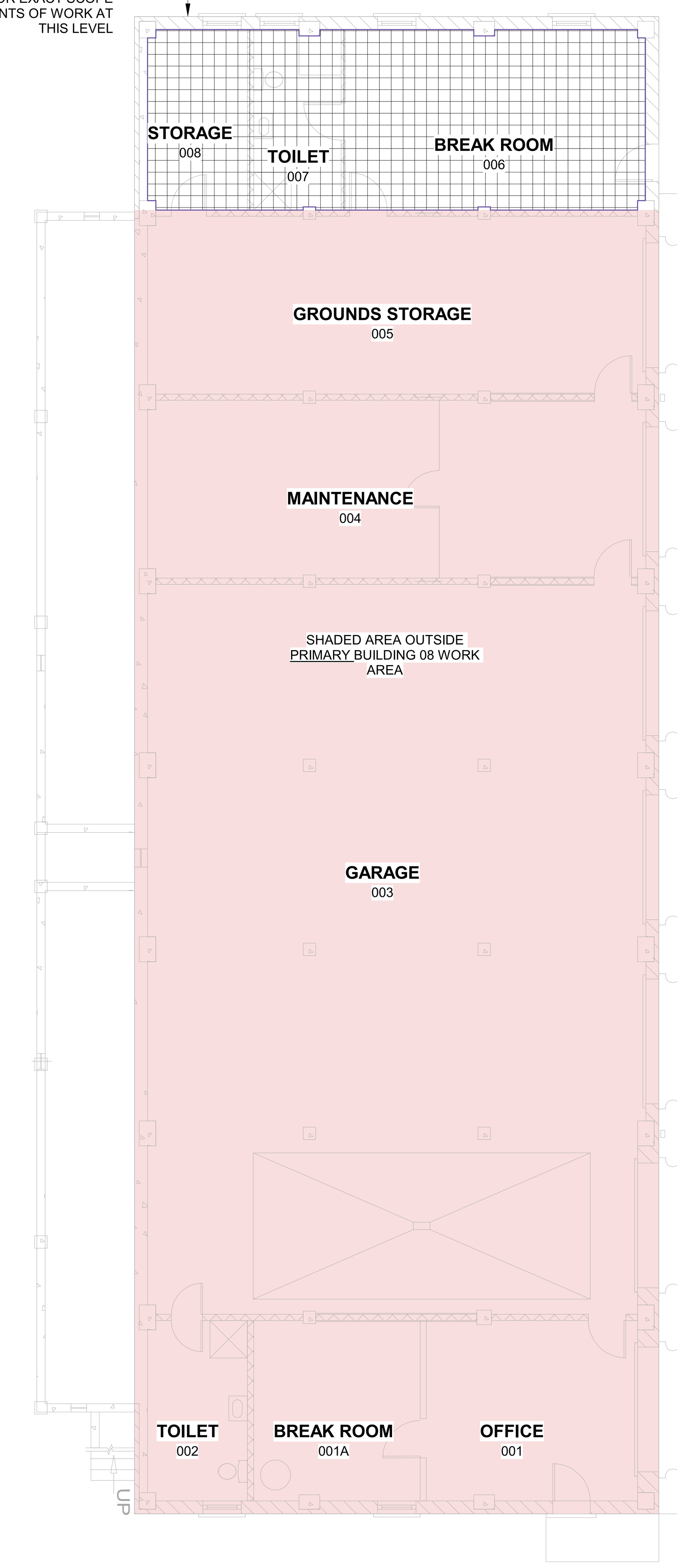

F6 **BUILDING 8 GROUND FLOOR ICRA PLAN**
1/8" = 1'-0"

GENERAL NOTES

1. REFER TO ICRA MATRIX ON SHEET GC103 FOR SUMMARY OF ICRA CONSTRUCTION/PROJECT ACTIVITIES, RISK GROUPS AND ICRA CLASS PRECAUTIONS. REFER TO SPECIFICATION SECTION 01 35 26 "SAFETY REQUIREMENTS" FOR FULL DETAILS OF REQUIREMENTS BY ICRA CLASS.
2. WORK LIMITS ARE TO ENCOMPASS ALL AREAS WITH REQUIRED WORK ACROSS ALL DISCIPLINES: CONTRACTOR TO FULLY FAMILIARIZE THEMSELVES WITH THE COMPLETE SET OF CONSTRUCTION DOCUMENTS AND THE INTENDED WORK.
3. ICRA CLASS(ES) SHOWN ARE CONCEPTUAL AND MAY BE USED AS A STARTING POINT FOR THE CONTRACTOR'S REQUIRED WORK UNDER SPECIFICATION SECTION 01 35 26 "SAFETY REQUIREMENTS".
4. CONTRACTORS ARE ENCOURAGED TO ATTEND ANY AND ALL SITE VISITS PROVIDED BY THE VA DURING BIDDING TO FAMILIARIZE THEMSELVES WITH THE AREAS OF WORK.
5. CONTRACTOR SHALL EXAMINE THE FULL SET OF PLANS AND DETERMINE IF THERE ARE ADDITIONAL AREAS OF WORK (AND ASSOCIATED ICRA CLASS(ES)) DURING BIDDING.
6. CONTRACTOR IS TO CONSIDER AND INCLUDE MONIES FOR REQUIRED WORK IN ALL PROJECT AREAS AS PART OF THEIR BASE BID.
7. IF CONTRACTOR IDENTIFIES POTENTIAL CONFLICTS OR LIMITATIONS IN THEIR ABILITY TO FULLY COMPLY WITH ICRA SAFETY REQUIREMENTS CONTAINED IN THE BIDDING DOCUMENTS, THEY SHALL SEEK RESOLUTION IN WRITING AS INDICATED IN BIDDING INSTRUCTIONS.
8. PROVIDE CONTAINMENT AS REQUIRED (BY HOSPITAL) INFECTION CONTROL REPRESENTATIVE FOR WORK OUTSIDE MAJOR AREA.
9. PROVIDE CONTAINMENT AT THE FLOOR BELOW FOR ANY WORK IN THE CEILING PLENUM.
10. PROVIDE TEMPORARY DOORS WITH GASKETING TO PREVENT THE TRANSFER OF DUST OUTSIDE WORK AREA.
11. PROVIDE TEMPORARY EMERGENCY EXITS FROM CONSTRUCTION ZONES; HOWEVER, ALL GENERAL CONSTRUCTION TRAFFIC SHOULD BE THROUGH VESTIBULE.
12. CONTRACTOR TO PROTECT ALL FINISHES INCLUDING (BUT NOT LIMITED TO) FLOORING, CEILING, WALL SURFACES, DOORS, AND DOOR FRAMES DURING THE MOVEMENT OF MATERIALS TO/FROM LIMIT OF WORK. COORDINATE WITH COR AND SPECIFICATIONS FOR PROCEDURES / REQUIREMENTS.

E:\dropbox_ARCHITECTURE_BIM ASSIST_PROJECTS\JDA\jda21.002 564-19-101 Faytteville Water Storage\BIM\564-19-101_Fayetteville Water Storage_Arch.r22.rvt
7/11/2022 5:35:55 PM

Revisions: Date:

CONSULTANTS

FIRE PROTECTION
FP&C CONSULTANTS KC, LLC
1330 BURLINGTON STREET, STE. 200
NORTH KANSAS CITY, MO 64116

SECURITY
GRW
801 CORPORATE DRIVE
LEXINGTON, KY 40503

CIVIL ENGINEER
HODGES ENGINEERING
231 SHORELINE DRIVE
MOUNTAIN HOME, AR 72653

STRUCTURAL ENGINEER
BERNHARD TME
BUILDING 2, 1 ALLIED DRIVE
SUITE 260
LITTLE ROCK, AR 72202

ARCHITECT/ENGINEER OF RECORD
A/E
JohnsonDanforth & Associates
2200 N. RODNEY PARHAM ROAD
SUITE 210
LITTLE ROCK, AR 72212
501-404-4811
jda@JohnsonDanforth.com
JDA PROJECT #: 2018.001

STAMP
STATE OF ALABAMA
DANIEL E. BUSH
NO. 6658
REGISTERED ARCHITECT
Digitally signed by Daniel E. Bush
Date: 2022.07.11 18:16:03-04'00'

Office of Construction and Facilities Management
VA U.S. Department of Veterans Affairs

Drawing Title	BUILDING 8 GROUND FLOOR ICRA PLAN
Approved: Project Director	
Phase	CONSTRUCTION DOCUMENTS
	FULLY SPRINKLERED
Project Title	CONSTRUCT NEW WATER STORAGE FACILITY
Project Number	564-19-101
Building Number	39
Location	FAYETTEVILLE, AR
Issue Date	2022.07.15
Checked	BUSH
Drawn	DEB
Drawing Number	GC103

VA FORM 08 - 6231

GENERAL NOTES:

1. As Built Drawings were provided by the Veteran's Administration.
2. Utility Survey in the vicinity of the Existing Water Tower and Leroy Pond Building was conducted on 10-8-19 by Mason Surveying.
3. Utility Survey in the vicinity of the Proposed New Water Tank north of Building 9 was conducted on 8-10-21 by Mason Surveying.
4. Existing utilities that were marked were provided by utility companies and the Veteran's Administration.
5. Contact Arkansas One Call prior to any Excavation at 811 or 1-800-482-8998.
6. The Utility Survey, As Built Drawings, Site Visits, and Meetings with the VA were used to compile this Document, some utilities were not marked in the field and are shown as best available information for planning purposes.

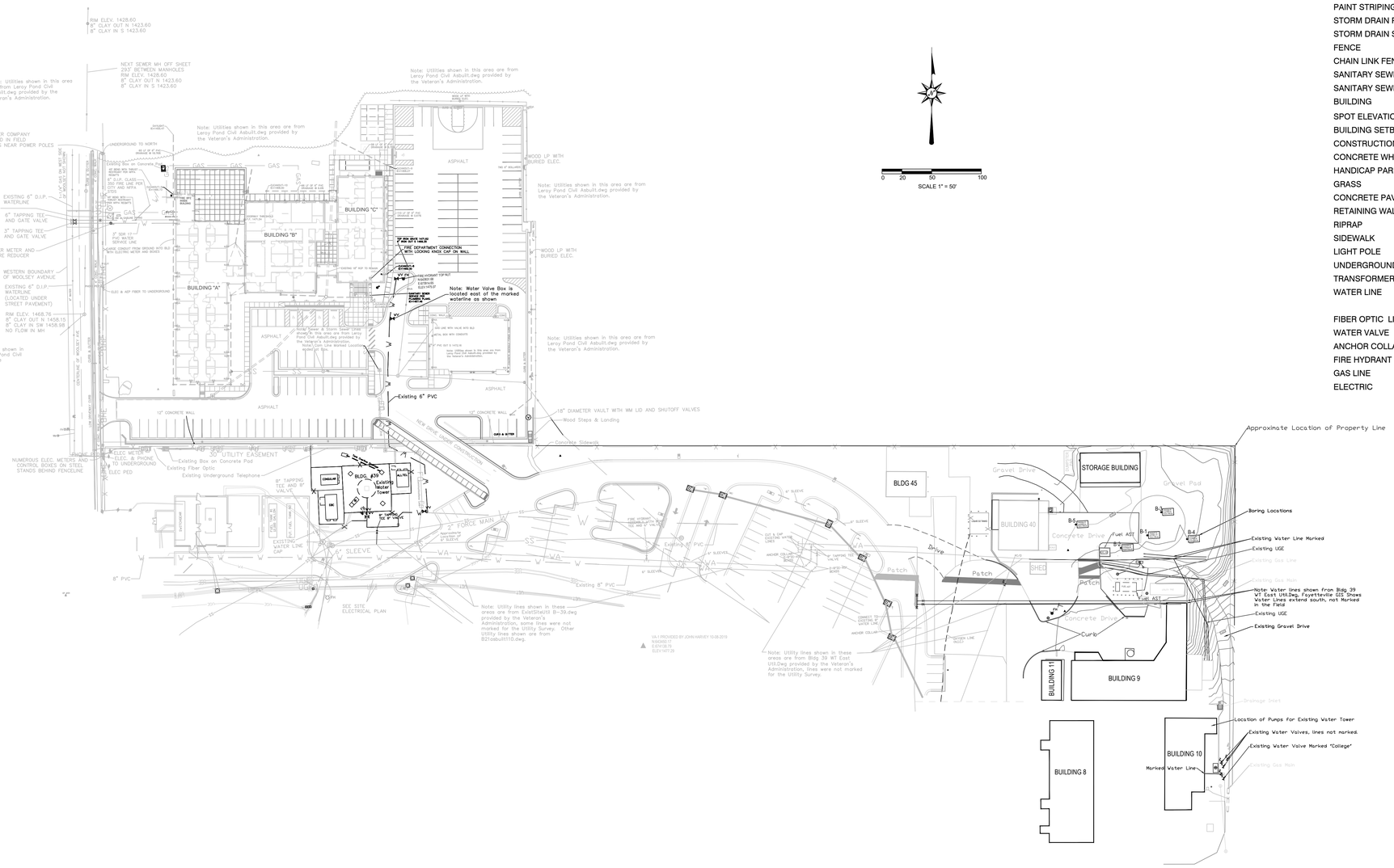

LEGEND

CURB & GUTTER	
PAINT STRIPING	
STORM DRAIN PIPE	
STORM DRAIN STRUCTURE	
FENCE	
CHAIN LINK FENCE	X
SANITARY SEWER MANHOLE	
SANITARY SEWER PIPE	SS
BUILDING	
SPOT ELEVATION	•1472.17
BUILDING SETBACK LINE	
CONSTRUCTION JOINT	
CONCRETE WHEELSTOP	
HANDICAP PARKING SIGN	
GRASS	
CONCRETE PAVING	
RETAINING WALL	
RIPRAP	
SIDEWALK	
LIGHT POLE	
UNDERGROUND ELECTRIC LINE	UGE
TRANSFORMER	T
WATER LINE	W
FIBER OPTIC LINE	UGFO
WATER VALVE	
ANCHOR COLLAR	
FIRE HYDRANT	
GAS LINE	GAS
ELECTRIC	E

KEY PLAN (NTS)

CERTIFICATE OF AUTHORIZATION
HODGES ENGINEERING
No. 3352
ARKANSAS

Revisions: Date:

CONSULTANTS

FPC CONSULTANTS
FIRE PROTECTION
FP&C CONSULTANTS KC, LLC
1330 BURLINGTON STREET, STE. 200
NORTH KANSAS CITY, MO 64116

GRW engineering | architecture | geospatial
SECURITY
GRW
1PORATE DRIVE
EXINGTON, KY 40503

Hodges Engineering
CIVIL ENGINEER
HODGES ENGINEERING
231 SHORELINE DRIVE
MOUNTAIN HOME, AR 72653

Bernhard TME Engineering
STRUCTURAL ENGINEER
BERNHARD TME
BUILDING 2, 1 ALLIED DRIVE
SUITE 260
LITTLE ROCK, AR 72202

ARCHITECT/ENGINEER OF RECORD
A/E
JohnsonDanforth & Associates
2200 N. RODNEY PARHAM ROAD
SUITE 210
LITTLE ROCK, AR 72212
501-404-4811
jda@JohnsonDanforth.com
JDA PROJECT #: 2018.001

STATE OF ARKANSAS
REGISTERED PROFESSIONAL ENGINEER
No.8289
KEVIN E. HODGES
10-2-19 7/15/22

Office of Construction and Facilities Management

VA U.S. Department of Veterans Affairs

Approved: Project Director

Drawing Title: EXISTING SITE PLAN

Phase: CONSTRUCTION DOCUMENTS

FULLY SPRINKLERED

Project Title: CONSTRUCT NEW WATER STORAGE FACILITY

Location: FAYETTEVILLE, AR

Issue Date: 2022.07.15 | Checked: JCH | Drawn: KEH

Project Number: 564-19-101

Building Number: .

Drawing Number: CI100

VA FORM 08 - 6231

GENERAL NOTES
1. Refer to Legend on CI100

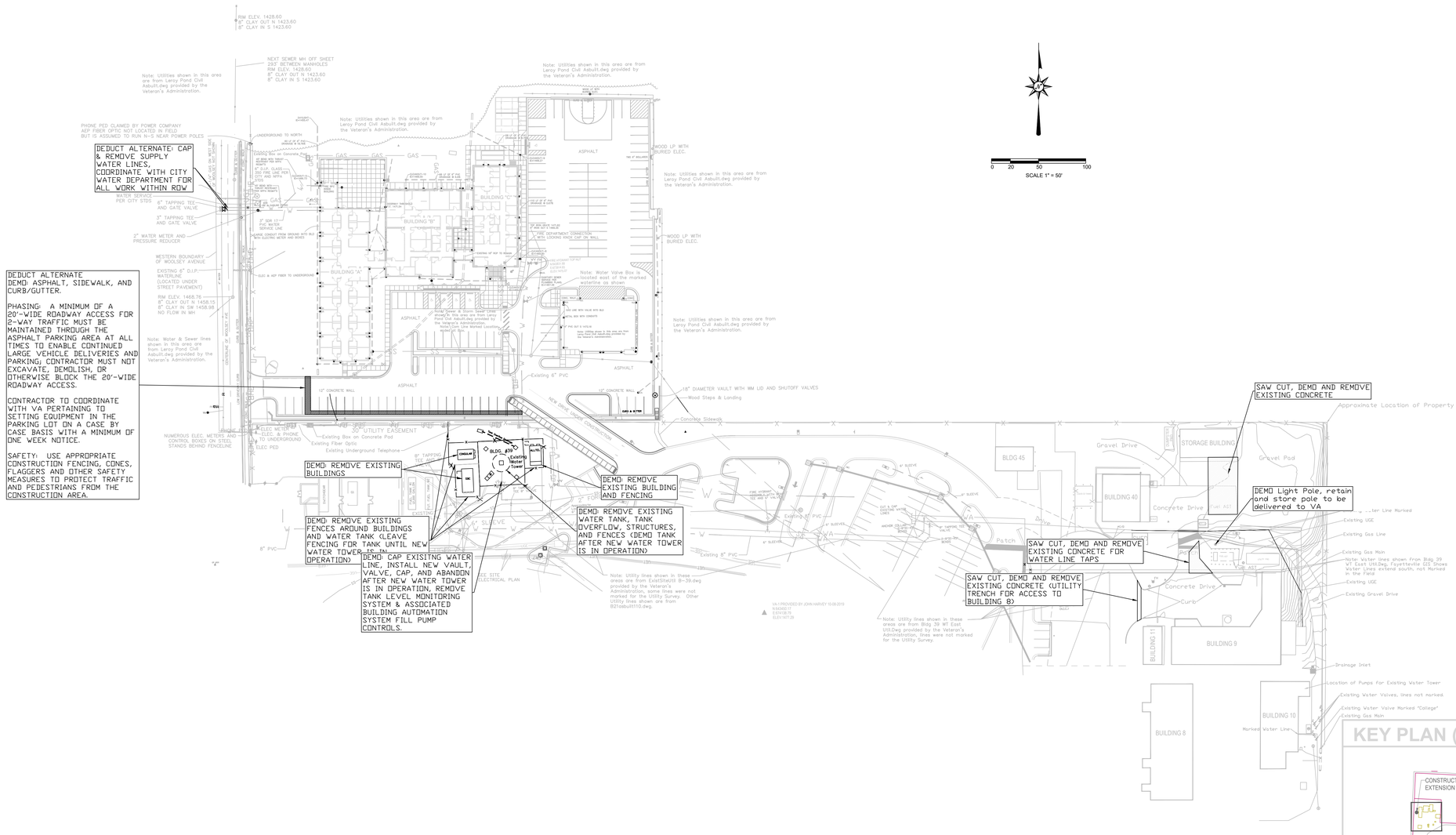

CERTIFICATE OF AUTHORIZATION
HODGES ENGINEERING
No. 3352
ARKANSAS

Revisions:	Date:

CONSULTANTS

FP&C CONSULTANTS — FIRE PROTECTION
FP&C CONSULTANTS KC, LLC
1330 BURLINGTON STREET, STE. 200
NORTH KANSAS CITY, MO 64116

GRW — SECURITY
GRW
CORPORATE DRIVE
LEXINGTON, KY 40803

Hodges Engineering — CIVIL ENGINEER
HODGES ENGINEERING
231 SHORELINE DRIVE
MOUNTAIN HOME, AR 72653

Bernhard TME Engineering — STRUCTURAL ENGINEER
BERNHARD TME
BUILDING 2, 1 ALLIED DRIVE
SUITE 260

ARCHITECT/ENGINEER OF RECORD

A/E
JohnsonDanforth & Associates
2200 N. RODNEY PARHAM ROAD
SUITE 210
LITTLE ROCK, AR 72212

501-404-4811
jda@JohnsonDanforth.com

JDA PROJECT #: 2018.001

STATE OF ARKANSAS
REGISTERED PROFESSIONAL ENGINEER
No.8289
KEVIN E. HODGES
09/15/22

Office of Construction and Facilities Management

VA U.S. Department of Veterans Affairs

Drawing Title: DEMOLITION PLAN	Phase: CONSTRUCTION DOCUMENTS	Project Title: CONSTRUCT NEW WATER STORAGE FACILITY	Project Number: 564-19-101
Approved: Project Director	FULLY SPRINKLERED	Location: FAYETTEVILLE, AR	Building Number: .
		Issue Date: 2022.07.15 / Checked: JCH / Drawn: KEH	Drawing Number: CD101

VA FORM 08 - 6231

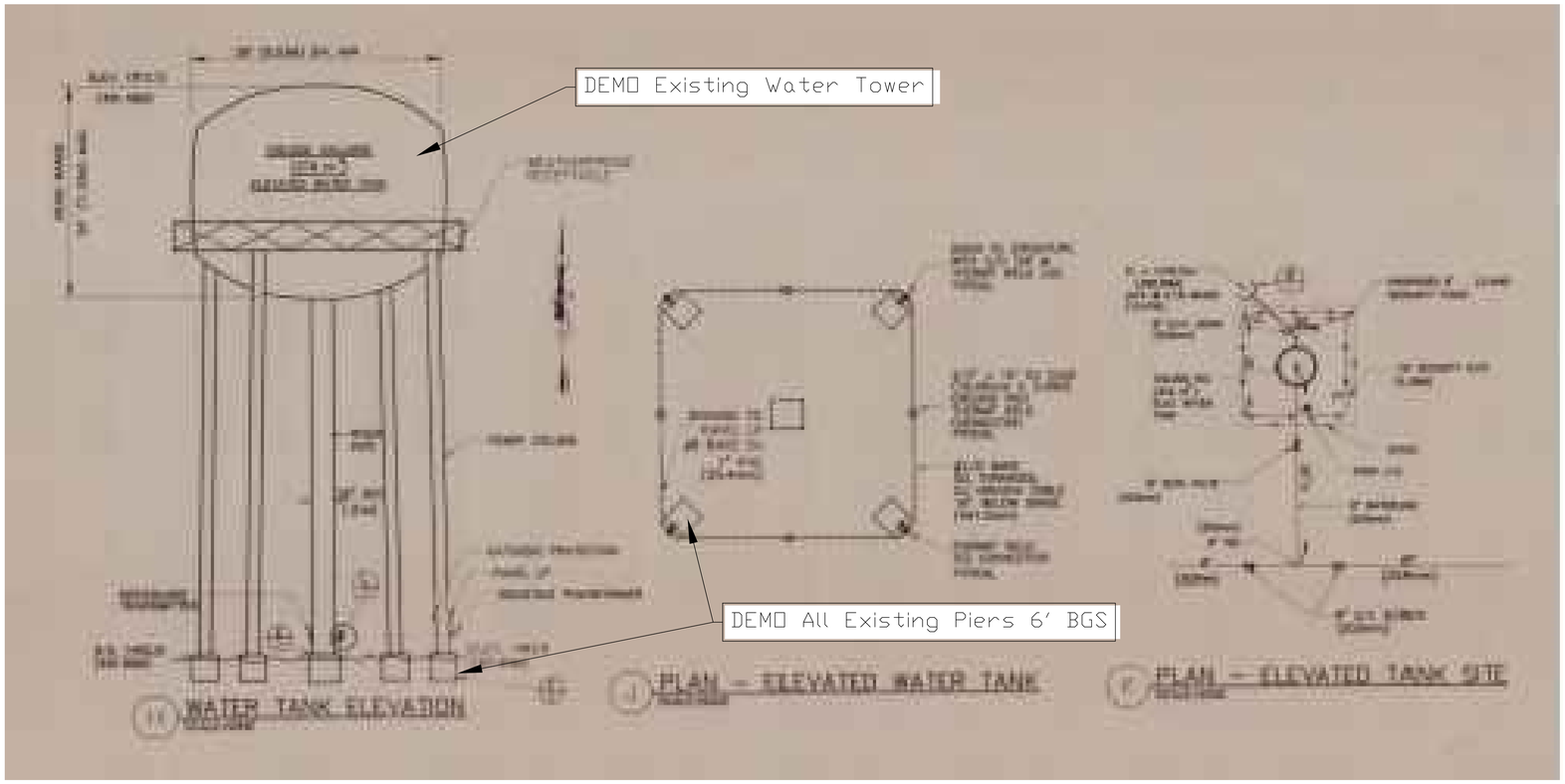

D2 ORIGINAL WATER TOWER PLAN

NTS

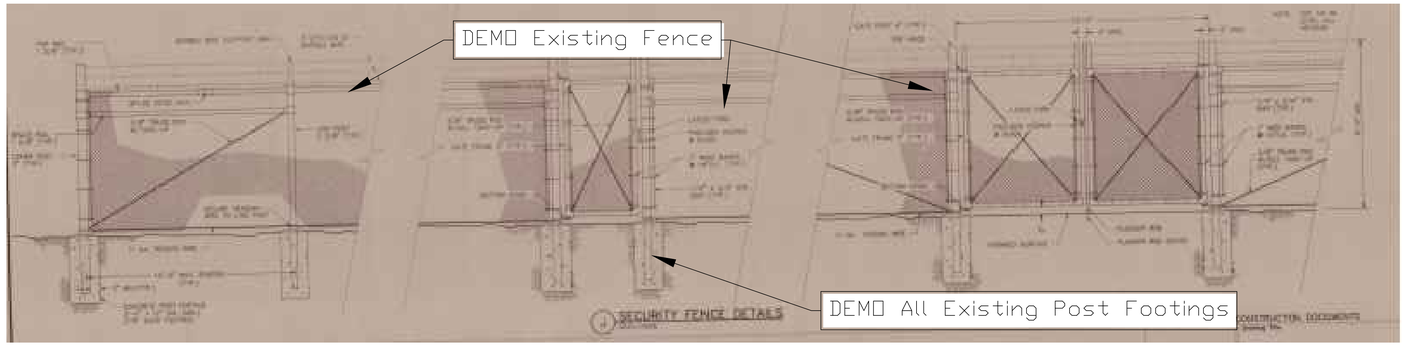

F2 ORIGINAL FENCING PLAN

NTS

KEY PLAN (NTS)

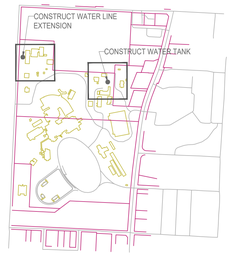

CERTIFICATE OF AUTHORIZATION
HODGES ENGINEERING
No. 3352
ARKANSAS

Revisions: Date:

CONSULTANTS

FPC CONSULTANTS
FIRE PROTECTION
FP&C CONSULTANTS KC, LLC
1330 BURLINGTON STREET, STE. 200
NORTH KANSAS CITY, MO 64116

GRW
SECURITY
GRW
RPORATE DRIVE
EXINGTON, KY 40503

Hodges Engineering
CIVIL ENGINEER
HODGES ENGINEERING
231 SHORELINE DRIVE
MOUNTAIN HOME, AR 72653

Bernhard TME Engineering
STRUCTURAL ENGINEER
BERNHARD TME
BUILDING 2, 1 ALLIED DRIVE
SUITE 250

ARCHITECT/ENGINEER OF RECORD
A/E
JohnsonDanforth & Associates
2200 N. RODNEY PARHAM ROAD
SUITE 210
LITTLE ROCK, AR 72212
501-404-4811
jda@JohnsonDanforth.com
JDA PROJECT #: 2018.001

STATE OF ARKANSAS
REGISTERED PROFESSIONAL ENGINEER
No.8289
KEVIN E. HODGES
7/15/22

Office of Construction and Facilities Management
VA U.S. Department of Veterans Affairs

Drawing Title	Phase	Project Title	Project Number
DEMOLITION PLAN	CONSTRUCTION DOCUMENTS	CONSTRUCT NEW WATER STORAGE FACILITY	564-19-101
Approved: Project Director	FULLY SPRINKLERED	Location: FAYETTEVILLE, AR	Building Number: .
		Issue Date: 2022.07.15 / Checked: JCH / Drawn: KEH	Drawing Number: CD102

VA FORM 08 - 6231

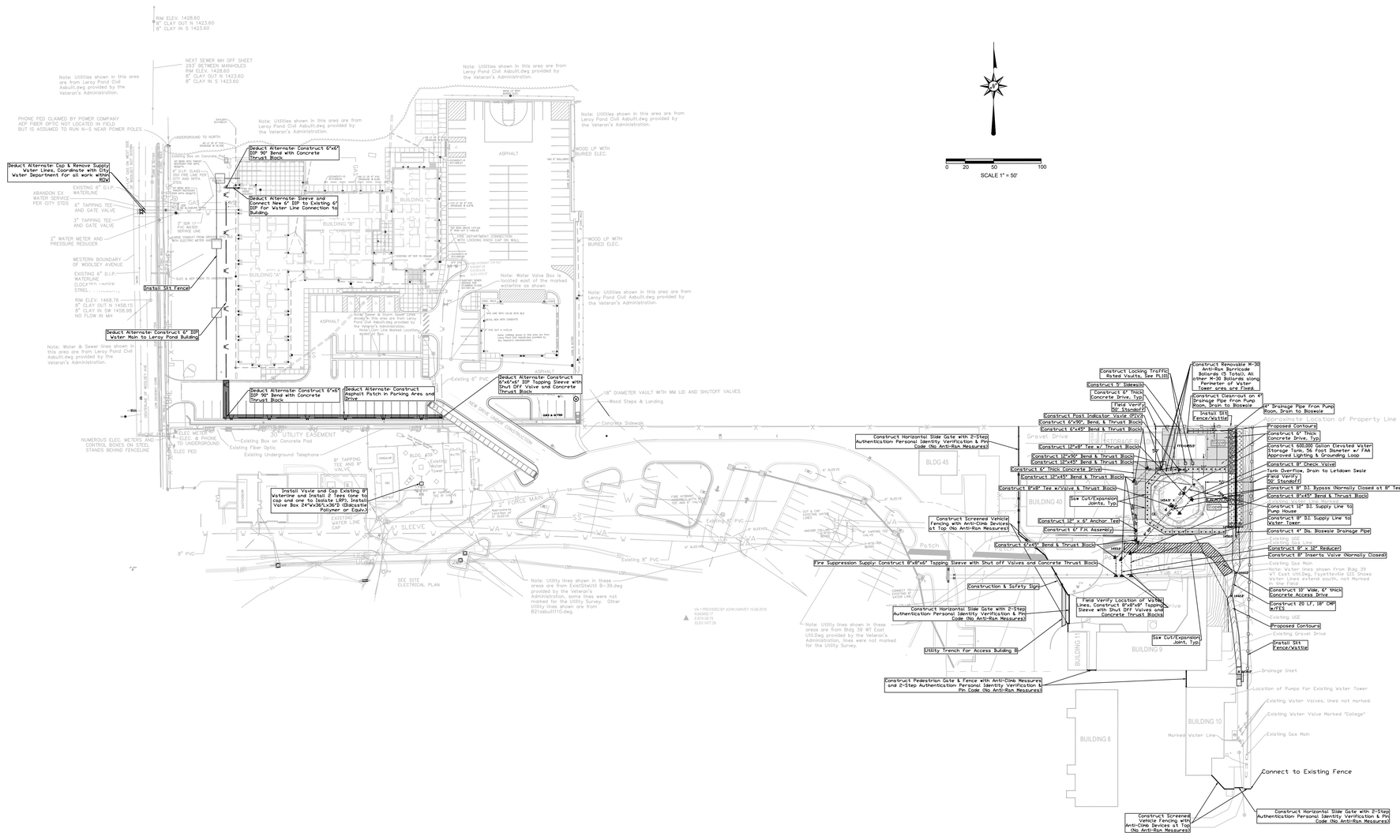

GENERAL NOTES

1. All Manholes within secured area shall have lockable covers.
2. Refer to Legend on CI100

KEY PLAN (NTS)

HODGES ENGINEERING No. 3352 ARKANSAS — CERTIFICATE OF AUTHORIZATION

Revisions: Date:

CONSULTANTS

FP&C CONSULTANTS — FIRE PROTECTION: FP&C CONSULTANTS KC, LLC, 1330 BURLINGTON STREET, STE. 200, NORTH KANSAS CITY, MO 64116

engineering | architecture | geospatial — SECURITY: GRW, 1PORATE DRIVE, EXINGTON, KY 40503

Hodges Engineering — CIVIL ENGINEER: HODGES ENGINEERING, 231 SHORELINE DRIVE, MOUNTAIN HOME, AR 72653

Bernhard TME Engineering — STRUCTURAL ENGINEER: BERNHARD TME, BUILDING 2, 1 ALLIED DRIVE SUITE 260

ARCHITECT/ENGINEER OF RECORD

A/E
JohnsonDanforth & Associates
2200 N. RODNEY PARHAM ROAD
SUITE 210
LITTLE ROCK, AR 72212

501-404-4811
jda@JohnsonDanforth.com

JDA PROJECT #: 2018.001

STATE OF ARKANSAS — REGISTERED PROFESSIONAL ENGINEER No.8289 — KEVIN E. HODGES — 7/15/22

Office of Construction and Facilities Management

VA U.S. Department of Veterans Affairs

Drawing Title: SITE PLAN	Phase: CONSTRUCTION DOCUMENTS	Project Title: CONSTRUCT NEW WATER STORAGE FACILITY	Project Number: 564-19-101
Approved: Project Director	FULLY SPRINKLERED	Location: FAYETTEVILLE, AR	Building Number: .
		Issue Date: 2022.07.15 / Checked: JCH / Drawn: KEH	Drawing Number: CU103

VA FORM 08 - 6231

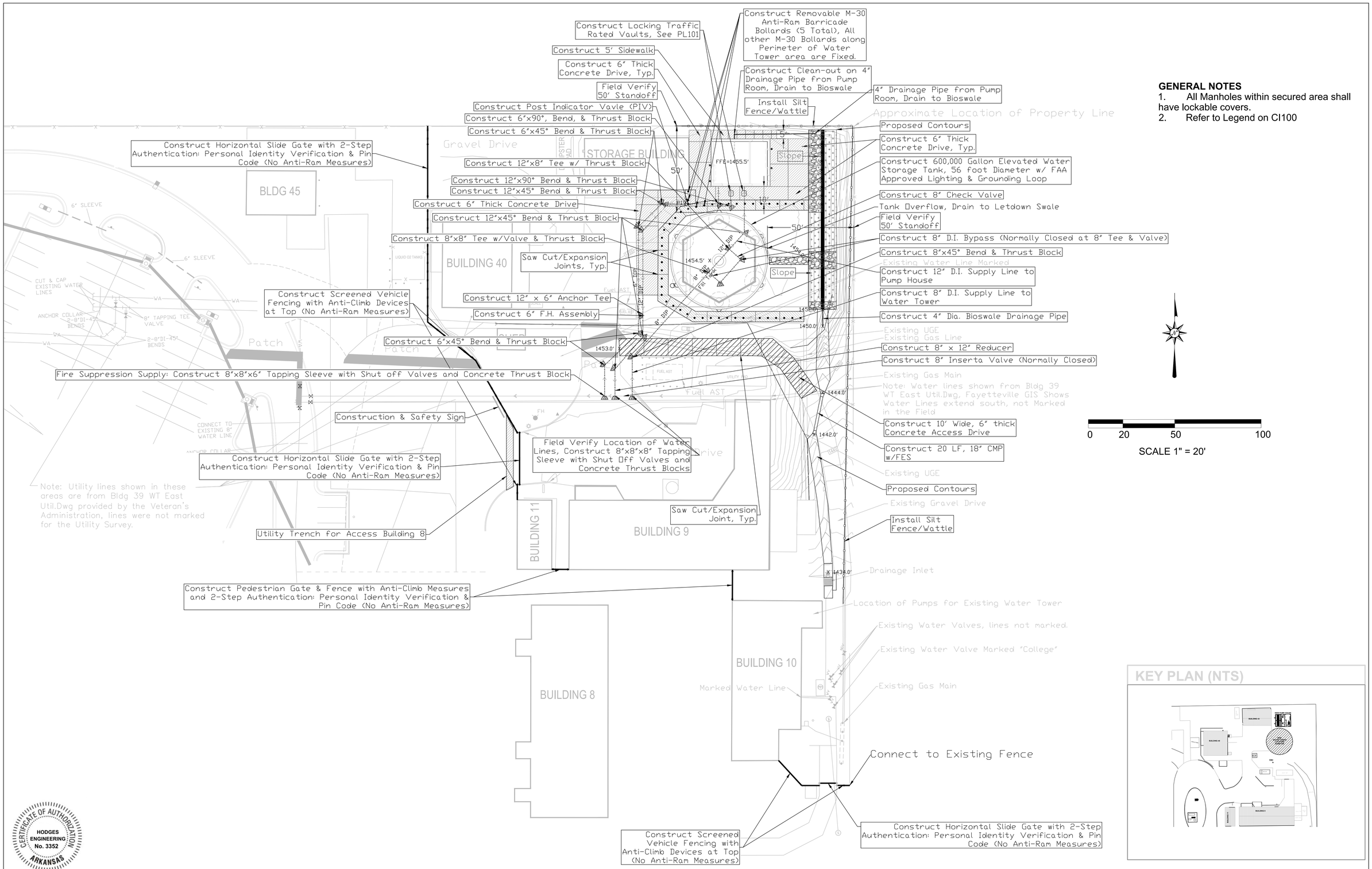

GENERAL NOTES

1. All Manholes within secured area shall have lockable covers.
2. Refer to Legend on CI100

KEY PLAN (NTS)

CERTIFICATE OF AUTHORIZATION — HODGES ENGINEERING No. 3352 — ARKANSAS

Revisions: Date:

CONSULTANTS

FPC CONSULTANTS — FIRE PROTECTION — FP&C CONSULTANTS KC, LLC — 1330 BURLINGTON STREET, STE. 200, NORTH KANSAS CITY, MO 64116

GRW — SECURITY — GRW — ORPORATE DRIVE, EXINGTON, KY 40503

Hodges Engineering — CIVIL ENGINEER — HODGES ENGINEERING — 231 SHORELINE DRIVE, MOUNTAIN HOME, AR 72653

Bernhard TME Engineering — STRUCTURAL ENGINEER — BERNHARD TME — BUILDING 2, 1 ALLIED DRIVE, SUITE 260

ARCHITECT/ENGINEER OF RECORD

A/E — JohnsonDanforth & Associates — 2200 N. RODNEY PARHAM ROAD, SUITE 210, LITTLE ROCK, AR 72212 — 501-404-4811 — jda@JohnsonDanforth.com

JDA PROJECT #: 2018.001

STATE OF ARKANSAS — REGISTERED PROFESSIONAL ENGINEER — No.8289 — KEVIN E. HODGES — 7/15/22

Office of Construction and Facilities Management

VA — U.S. Department of Veterans Affairs

Drawing Title: WATER TOWER AREA & WATER SUPPLY PLAN	Phase: CONSTRUCTION DOCUMENTS	Project Title: CONSTRUCT NEW WATER STORAGE FACILITY	Project Number: 564-19-101
			Building Number: .
Approved: Project Director	FULLY SPRINKLERED	Location: FAYETTEVILLE, AR	Drawing Number: CU104
		Issue Date: 2022.07.15 — Checked: JCH — Drawn: KEH	

VA FORM 08 - 6231

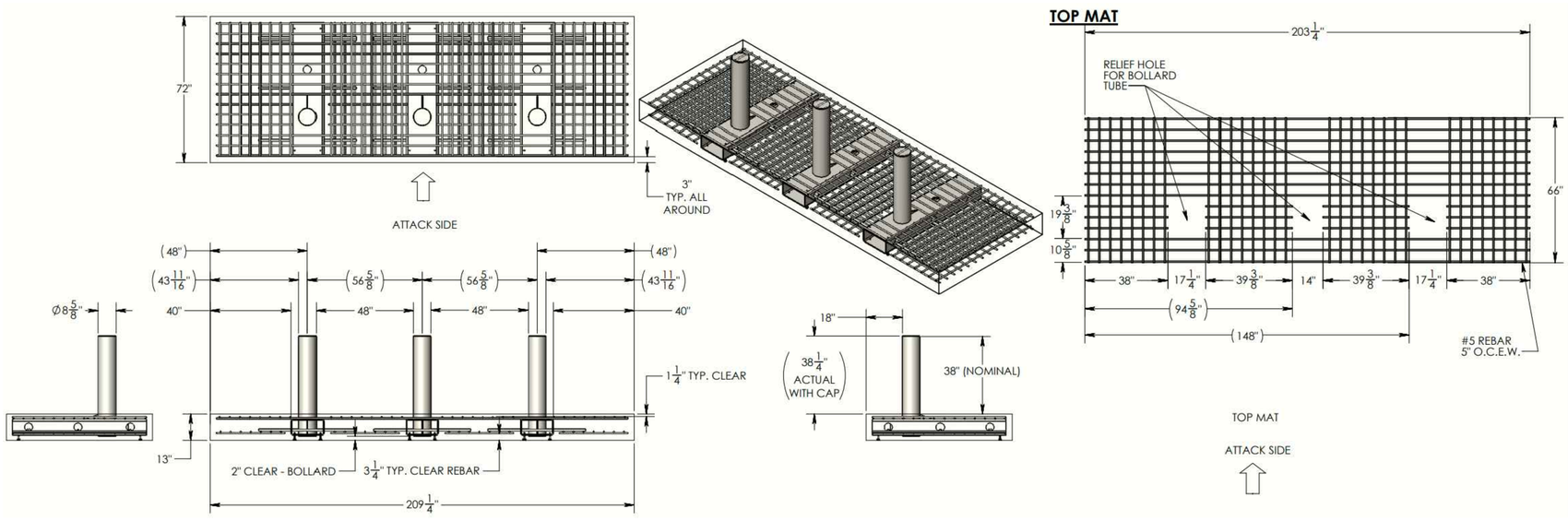

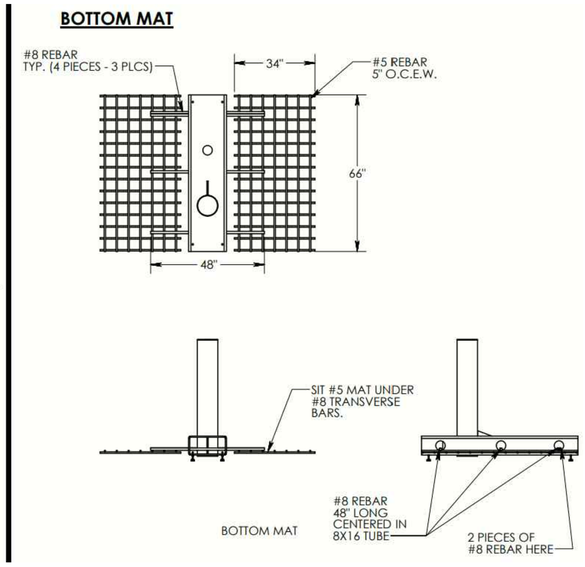

C1 M30 REMOVABLE BOLLARD ARRAY

NTS

GENERAL NOTES

1. M30 Bollard Details from Ameristar Perimeter Security USA, Inc.
2. Concrete F'c=4,000 PSI
3. Concrete Bollards from VA TIL

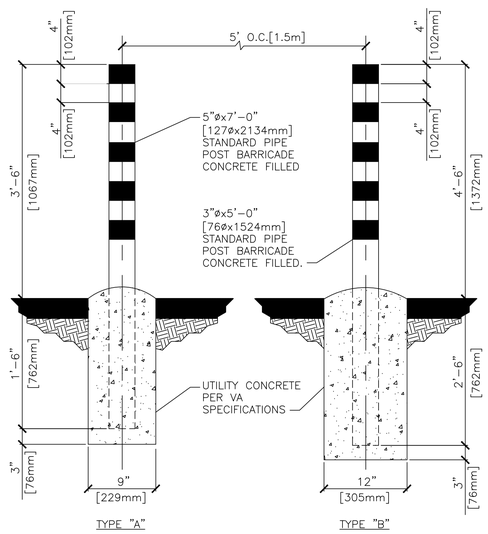

NOTES:

1. POST BARRICADES SHALL BE PAINTED WITH ONE PRIME COAT OF RED OXIDE (PAINT NO.1). ONE FINISH COAT OF DULL BLACK ENAMEL PER VA SPECIFICATIONS AND STRIPES CONSISTING OF 4" [102mm] BANDS OF YELLOW REFLECTORIZED TAPE SHALL BE USED UNLESS OTHERWISE SPECIFIED ON THE PLANS.
2. FINISH COLOR COMBINATIONS, OTHER THAN THAT SPECIFIED ABOVE, SHALL BE SUBMITTED TO THE AGENCY FOR APPROVAL.

CERTIFICATE OF AUTHORIZATION HODGES ENGINEERING No. 3352 ARKANSAS

F1 CONCRETE BOLLARDS

NTS

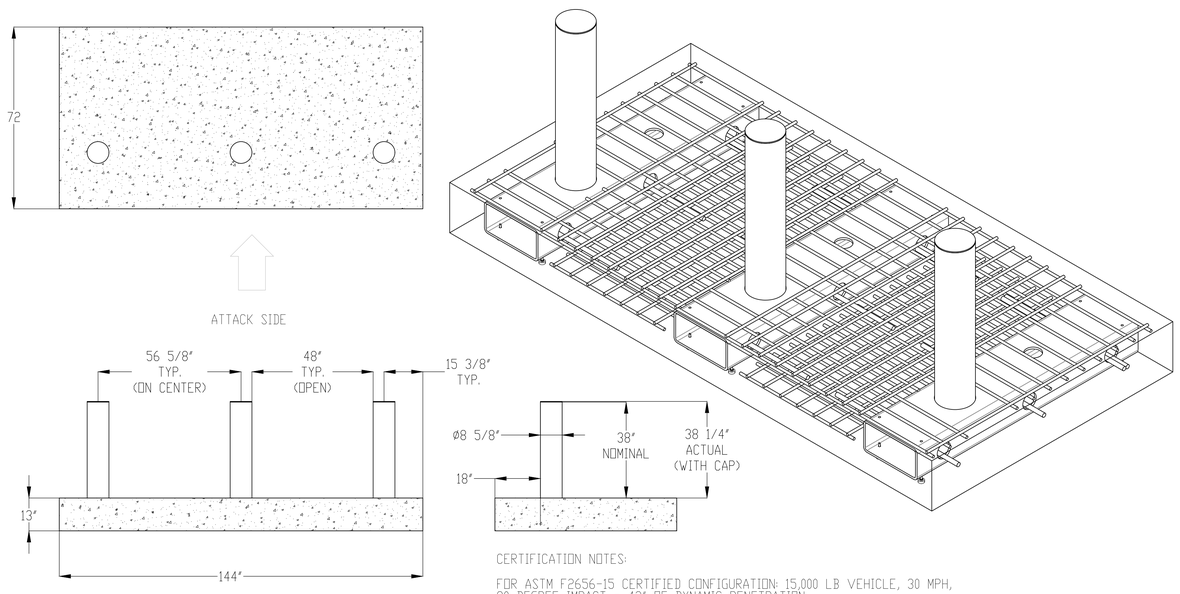

CERTIFICATION NOTES:

FOR ASTM F2656-15 CERTIFIED CONFIGURATION: 15,000 LB VEHICLE, 30 MPH, 90 DEGREE IMPACT - 43" OF DYNAMIC PENETRATION.

NOTES:

1. 4000 PSI CONCRETE SPECIFIED.
2. BOLLARDS SOLD INDIVIDUALLY.

F5 M30 FIXED BOLLRD ARRAY

NTS

KEY PLAN (NTS)

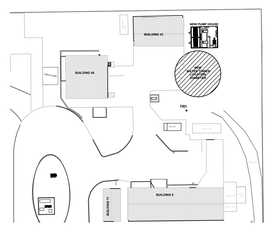

Revisions:	Date:

CONSULTANTS

FP&C CONSULTANTS — FIRE PROTECTION — FP&C CONSULTANTS KC, LLC — 1330 BURLINGTON STREET, STE. 200, NORTH KANSAS CITY, MO 64116

GRW — SECURITY — GRW — CORPORATE DRIVE, LEXINGTON, KY 40503

Hodges Engineering — CIVIL ENGINEER — HODGES ENGINEERING — 231 SHORELINE DRIVE, MOUNTAIN HOME, AR 72653

Bernhard TME Engineering — STRUCTURAL ENGINEER — BERNHARD TME — BUILDING 2, 1 ALLIED DRIVE SUITE 260

ARCHITECT/ENGINEER OF RECORD

A/E JohnsonDanforth & Associates — 2200 N. RODNEY PARHAM ROAD, SUITE 210, LITTLE ROCK, AR 72212 — 501-404-4811 — jda@JohnsonDanforth.com — JDA PROJECT #: 2018.001

STATE OF ARKANSAS REGISTERED PROFESSIONAL ENGINEER No.8289 KEVIN E. HODGES 7/15/22

Office of Construction and Facilities Management — VA U.S. Department of Veterans Affairs

Drawing Title	Phase	Project Title	Project Number
BOLLARD DETAILS	CONSTRUCTION DOCUMENTS	CONSTRUCT NEW WATER STORAGE FACILITY	564-19-101
Approved: Project Director	FULLY SPRINKLERED	Location: FAYETTEVILLE, AR	Building Number: -
		Issue Date: 2022.07.15 / Checked: JCH / Drawn: KEH	Drawing Number: CU105

VA FORM 08 - 6231

SIDEWALK CONSTRUCTION NOTES:

1. SIDEWALK SHALL HAVE TOOLED OR SAW-CUT TRANSVERSE JOINTS AT INTERVALS EQUAL TO THE WIDTH OF SIDEWALK (5' TYP.). THESE WEAKENED PLANE (CONTRACTION) JOINTS SHALL BE CONSTRUCTED TO 1/4 DEPTH OF THE SIDEWALK THICKNESS AND SHALL BE 1/8" TO 3/8" WIDE.
2. CONCRETE SHALL HAVE A MINIMUM COMPRESSIVE STRENGTH OF 3500 p.s.i.
3. CONCRETE SHALL HAVE A MINIMUM CEMENT CONTENT OF 5 1/2 BAGS per Cu. Yd. WITH 5 1/2% ± 1 1/2% AIR ENTRAINMENT.
4. EXPANSION JOINT MATERIAL SHALL BE PREFORMED ASPHALT IMPREGNATED FIBERBOARD CONFORMING TO AASHTO M-213. EXPANSION JOINT MATERIAL SHALL BE LEFT 1/2" LOWER THAN GRADE OR TRIMMED 1/2" LOWER, AND FILLED WITH SILICONE SEALER TO FINISHED GRADE.
5. ALL COLD JOINTS AND SAW-CUT JOINTS SHALL BE FILLED TO FINISHED GRADE WITH JOINT SEALANT.
6. CONCRETE CURING COMPOUND SHALL BE SEALTIGHT 1600-WHITE MANUFACTURED BY W.R. MEADOWS, OR AN APPROVED EQUAL.
7. CONCRETE JOINT SEALANT SHALL BE SONNEBORN "SONOLASTIC SLI" OR AND APPROVED EQUAL. CLOSED CELL BACKER ROD SHALL BE USED IN DEEP JOINTS, AS NEEDED, ACCORDING TO THE MANUFACTURER'S INSTRUCTIONS.
9. ALL SIDEWALKS SHALL HAVE ONE-HALF INCH ROLLED EDGES AND A BROOMED FINISH.

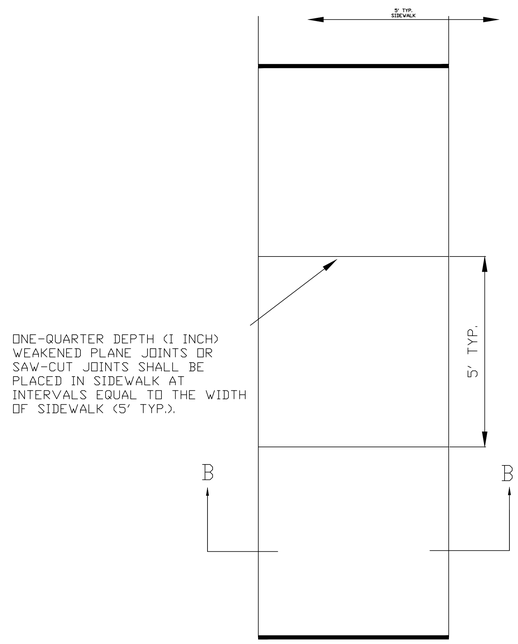

PLAN

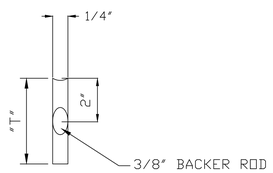

"T"=1/4 SLAB THICKNESS + 1/2"

JOINT SEALANT DETAIL

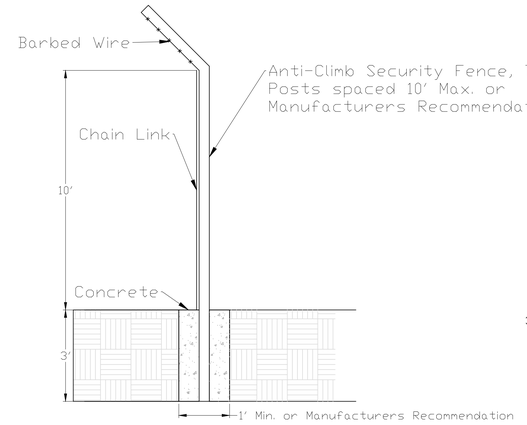

B6 SECURITY FENCE DETAIL

NTS

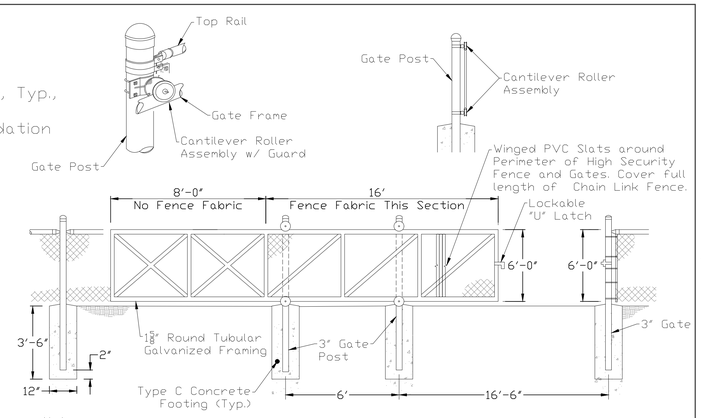

Notes:
1. Match Existing Chain Link Fence Fabric Color/Coating.
2. Ties Shall be Hot-Dip Galvanized, .90 oz. Zinc per Sq. Ft.
3. All Posts, Rails, and Appurtenances shall be Hot-Dip Galvanized.
4. All Posts and Rails shall conform to Goup 1A: (ASTM F1043) Schedule 40 Steel Pipe, ASTM F Regular Grade (30,000 PSI Yield).
5. Fencing System is Designed to withstand a Wind Speed of 105 MPH.
6. Coordinate Post Locations with Proposed Utilities during Construction.
7. Privacy Slat Color to be Selected by Owner.

C8 SECURITY GATE DETAIL

NTS

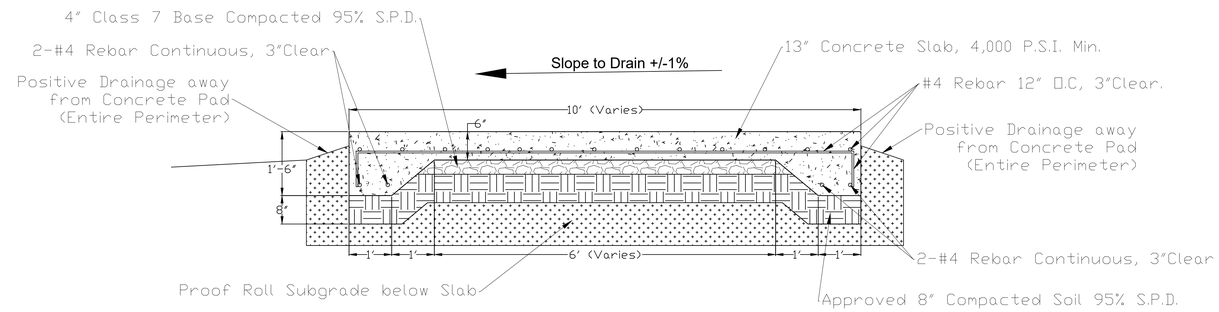

D7 CONCRETE DRIVE SECTION

NTS

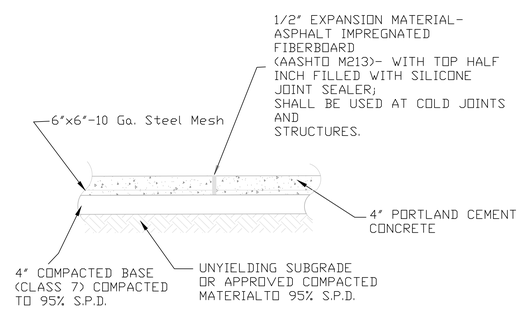

ELEVATION

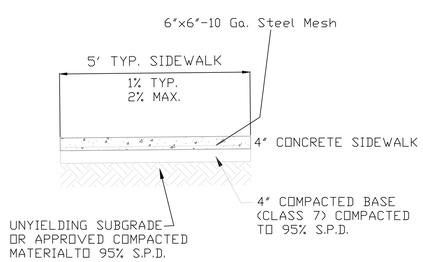

DETAIL B-B

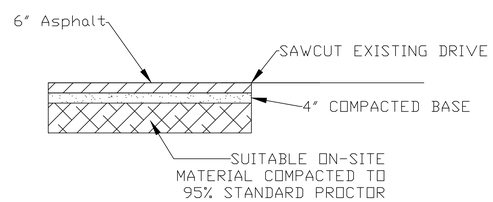

F5 ASPHALT PATCH

NTS

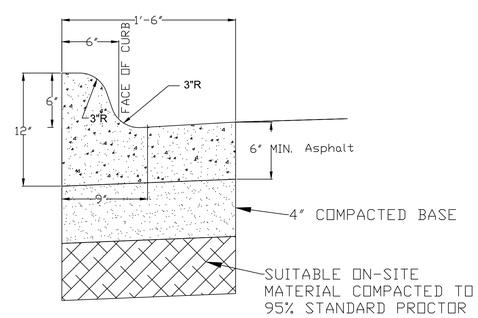

F7 CURB DETAIL

NTS

KEY PLAN (NTS)

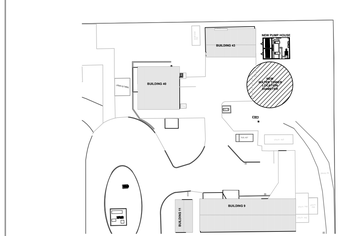

F1 SIDEWALK DETAIL

NTS

CERTIFICATE OF AUTHORIZATION HODGES ENGINEERING No. 3352 ARKANSAS

Revisions: Date:

CONSULTANTS

FPC CONSULTANTS — FIRE PROTECTION: FP&C CONSULTANTS KC, LLC, 1330 BURLINGTON STREET, STE. 200, NORTH KANSAS CITY, MO 64116

SECURITY: GRW, 2 CORPORATE DRIVE, LEXINGTON, KY 40503

Hodges Engineering — CIVIL ENGINEER: HODGES ENGINEERING, 231 SHORELINE DRIVE, MOUNTAIN HOME, AR 72653

Bernhard TME Engineering — STRUCTURAL ENGINEER: BERNHARD TME, BUILDING 2, 1 ALLIED DRIVE SUITE 260

ARCHITECT/ENGINEER OF RECORD

A/E JohnsonDanforth & Associates, 2200 N. RODNEY PARHAM ROAD SUITE 210, LITTLE ROCK, AR 72212, 501-404-4811, jda@JohnsonDanforth.com

JDA PROJECT #: 2018.001

STATE OF ARKANSAS REGISTERED PROFESSIONAL ENGINEER No.8289 KEVIN E. HODGES 10-2-2020 7/15/22

Office of Construction and Facilities Management

VA U.S. Department of Veterans Affairs

Drawing Title: SIDEWALK, SECURITY FENCE, CONCRETE, AND ASPHALT DETAILS	Phase: CONSTRUCTION DOCUMENTS	Project Title: CONSTRUCT NEW WATER STORAGE FACILITY	Project Number: 564-19-101
			Building Number: .
Approved: Project Director	FULLY SPRINKLERED	Location: FAYETTEVILLE, AR	Drawing Number: CU106
		Issue Date: 2022.07.15 / Checked: JCH / Drawn: KEH	

VA FORM 08 - 6231

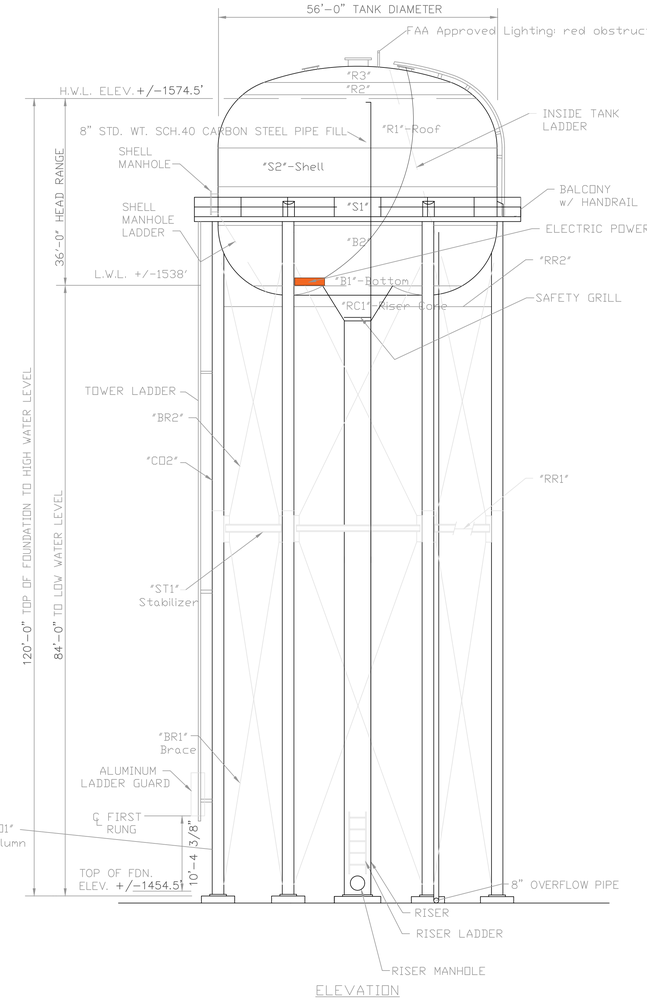

ELEVATION

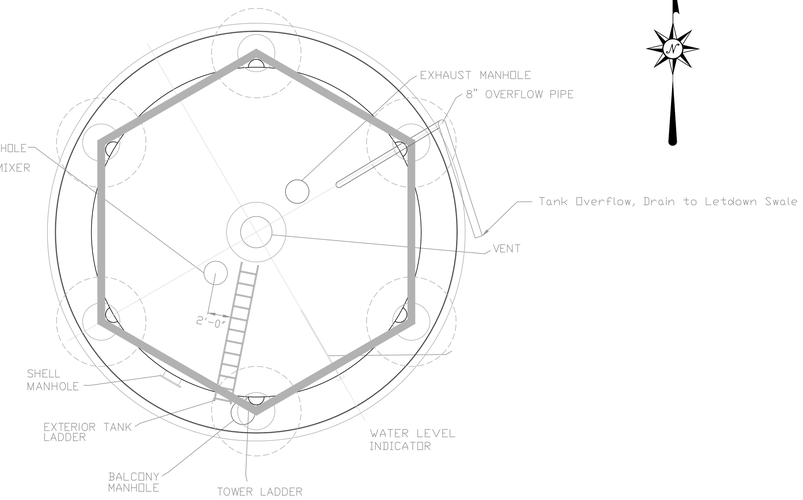

PLAN

DESIGN NOTES

TANK & TOWER DESIGNED IN ACCORDANCE WITH AWWA D100-11 AND THE PROJECT PLANS AND SPECIFICATIONS.
INSTALL & CONNECT NEW PUMP LEVEL MONITORING SYSTEM TO THE VA B.A.S.

DESIGN LOADS (AWWA D100-11)
BASIC WIND SPEED: 115 MPH SNOW LOAD: 5 PSF
I = 1.15
SEISMIC: S_S = 0.175 I_E = 1.5
S_1 = 0.091 IBC/VA Risk Cat. IV
SITE CLASS D VA Hazard Area Moderate Low
CORROSION ALLOWANCE: 0.1"

MATERIAL

STEEL PLATE:	ASTM A283 GR. C; ASTM A36
STRUCTURAL STEEL:	ASTM A36; ASTM A53 GR. B
BRACE/RISER RODS:	ASTM A36
WING & CLEVIS PLATES:	ASTM A572-50
RISER ROD & STRUT CLIPS:	ASTM A572-50
LADDER RUNGS:	ASTM A706
RISER ROD BOLTS:	ASTM A325
BOLTS (U.N.O.)	ASTM A307
GROUT:	QUIKRETE N-S GROUT

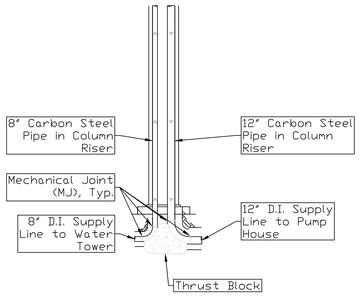

ELEVATION AT COLUMN RISER

E2 WATER TANK DETAILS
NTS

KEY PLAN (NTS)

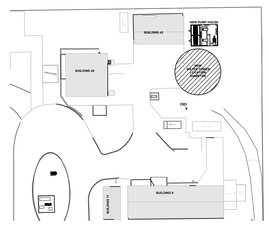

CERTIFICATE OF AUTHORIZATION HODGES ENGINEERING No. 3352 ARKANSAS

Revisions: Date:

CONSULTANTS

FPC CONSULTANTS — FIRE PROTECTION: FP&C CONSULTANTS KC, LLC, 1330 BURLINGTON STREET, STE. 200, NORTH KANSAS CITY, MO 64116
GRW — SECURITY: GRW, ...RPORATE DRIVE, EXINGTON, KY 40503
Hodges Engineering — CIVIL ENGINEER: HODGES ENGINEERING, 231 SHORELINE DRIVE, MOUNTAIN HOME, AR 72653
Bernhard TME Engineering — STRUCTURAL ENGINEER: BERNHARD TME, BUILDING 2, 1 ALLIED DRIVE SUITE 260

ARCHITECT/ENGINEER OF RECORD
A/E
JohnsonDanforth & Associates
2200 N. RODNEY PARHAM ROAD
SUITE 210
LITTLE ROCK, AR 72212
501-404-4811
jda@JohnsonDanforth.com
JDA PROJECT #: 2018.001

STATE OF ARKANSAS REGISTERED PROFESSIONAL ENGINEER No.8289 KEVIN E. HODGES 7/15/22

Office of Construction and Facilities Management
VA U.S. Department of Veterans Affairs

Drawing Title: WATER TOWER DETAILS	Phase: CONSTRUCTION DOCUMENTS	Project Title: CONSTRUCT NEW WATER STORAGE FACILITY	Project Number: 564-19-101
			Building Number: .
Approved: Project Director	FULLY SPRINKLERED	Location: FAYETTEVILLE, AR	Drawing Number: CU107
		Issue Date: 2022.07.15 / Checked: JCH / Drawn: KEH	

VA FORM 08 - 6231

GENERAL NOTES

1. Refer to Legend on CI100

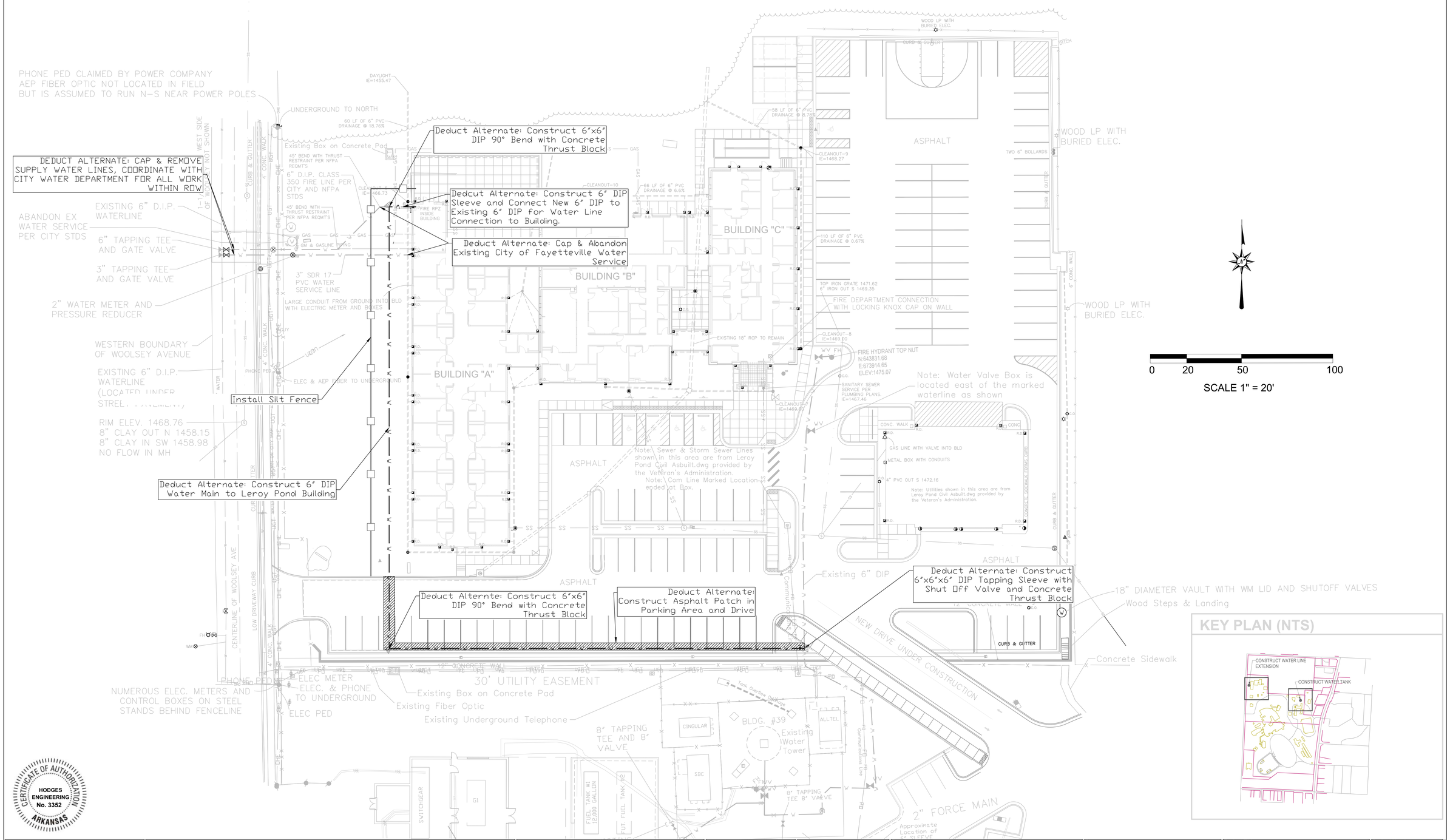

KEY PLAN (NTS)

CERTIFICATE OF AUTHORIZATION HODGES ENGINEERING No. 3352 ARKANSAS

Revisions:	Date:

CONSULTANTS

FP&C CONSULTANTS — FIRE PROTECTION: FP&C CONSULTANTS KC, LLC, 1330 BURLINGTON STREET, STE. 200, NORTH KANSAS CITY, MO 64116

GRW — SECURITY: GRW, 1APPORATE DRIVE, EXINGTON, KY 40503

Hodges Engineering — CIVIL ENGINEER: HODGES ENGINEERING, 231 SHORELINE DRIVE, MOUNTAIN HOME, AR 72653

Bernhard TME Engineering — STRUCTURAL ENGINEER: BERNHARD TME, BUILDING 2, 1 ALLIED DRIVE SUITE 260

ARCHITECT/ENGINEER OF RECORD

A/E
JohnsonDanforth & Associates
2200 N. RODNEY PARHAM ROAD
SUITE 210
LITTLE ROCK, AR 72212
501-404-4811
jda@JohnsonDanforth.com
JDA PROJECT #: 2018.001

STATE OF ARKANSAS REGISTERED PROFESSIONAL ENGINEER No.8289 KEVIN E. HODGES 7/15/22

Office of Construction and Facilities Management

VA U.S. Department of Veterans Affairs

Drawing Title: DEDUCT ALTERNATE: CONSTRUCT WATER LINE EXTENSION PLAN	Phase: CONSTRUCTION DOCUMENTS	Project Title: CONSTRUCT NEW WATER STORAGE FACILITY	Project Number: 564-19-101
Approved: Project Director	FULLY SPRINKLERED	Location: FAYETTEVILLE, AR	Building Number: .
		Issue Date: 2022.07.15 / Checked: JCH / Drawn: KEH	Drawing Number: CU108

VA FORM 08 - 6231

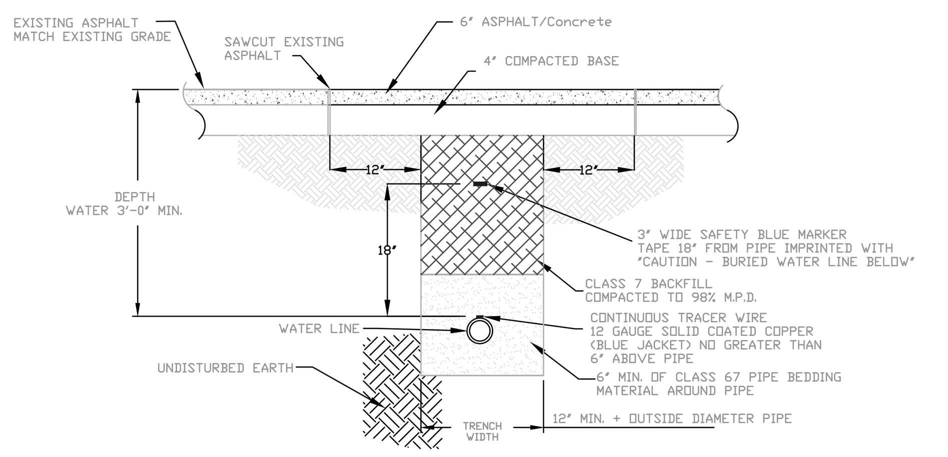

B1 WATERLINE UNDER ASPHALT/CONCRETE DETAIL
NTS

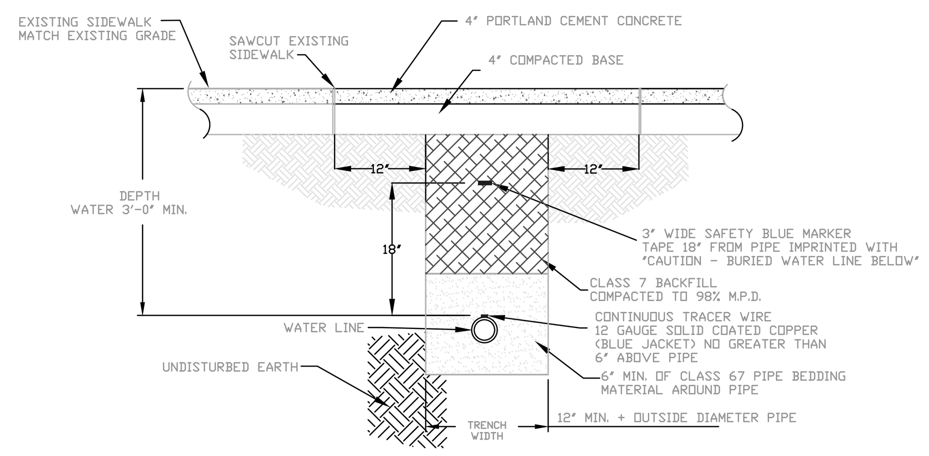

C1 WATERLINE UNDER SIDEWALK DETAIL
NTS

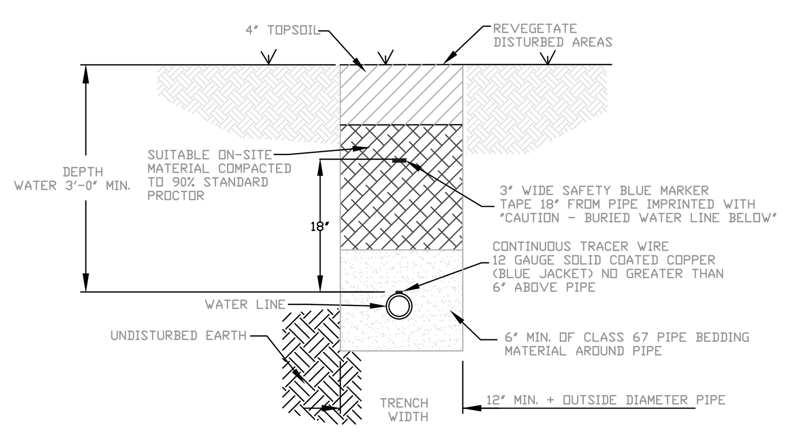

D1 WATERLINE UNDER GROUND DETAIL
NTS

NOTES:

1. ALL VALVES, BENDS, ETC. SHALL BE RESTRAINED.
2. THE CONTRACTOR SHALL PROVIDE ALL ITEMS NECESSARY TO CONNECT WITH ANY PART OF THE EXISTING WATER SYSTEM THAT WILL REMAIN IN ORDER TO ESTABLISH A SATISFACTORY AND ACCEPTABLE WATER SYSTEM.
3. CONTRACTOR TO CONSTRUCT ALL TRENCH EXCAVATION IN ACCORDANCE WITH ALL OSHA REGULATIONS (29 CFR CH.XVII, SUBPART B)
4. TRENCH SHALL BE EXCAVATED BELOW GRADE REQUIRED TO PROVIDE A MINIMUM 36" OF PIPE COVER.

WATER LINE TRENCH DETAILS
NTS

PERMITTED VALVES
1. AMERICAN FLOW CONTROL SERIES 2500
2. MUELLER SERIES 2360
3. AMERICAN AVK COMPANY SERIES 25 OR SERIES 45

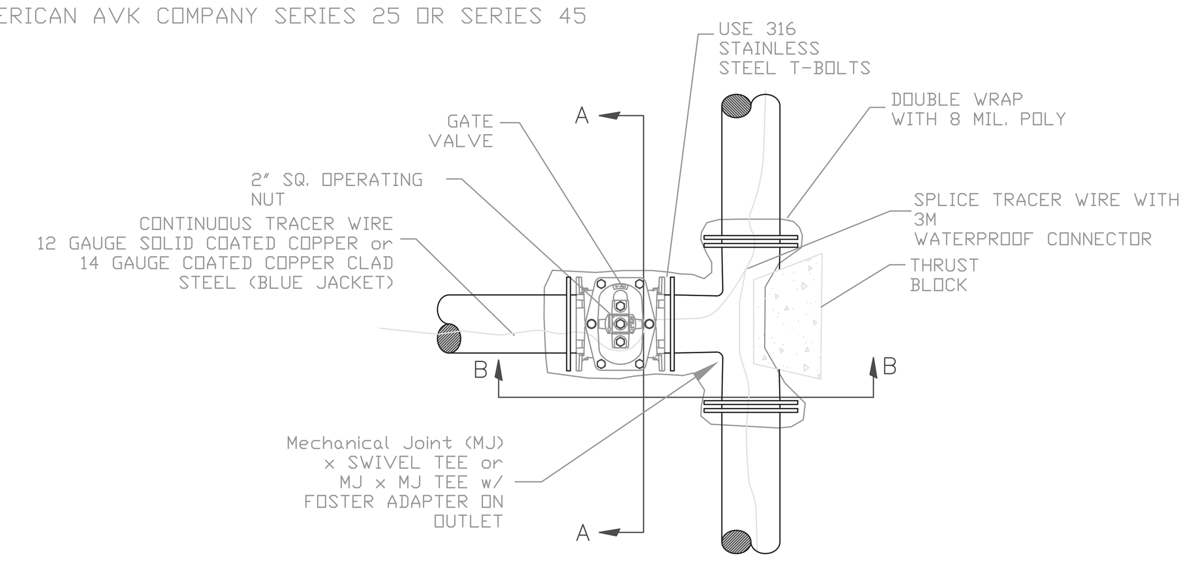

PLAN

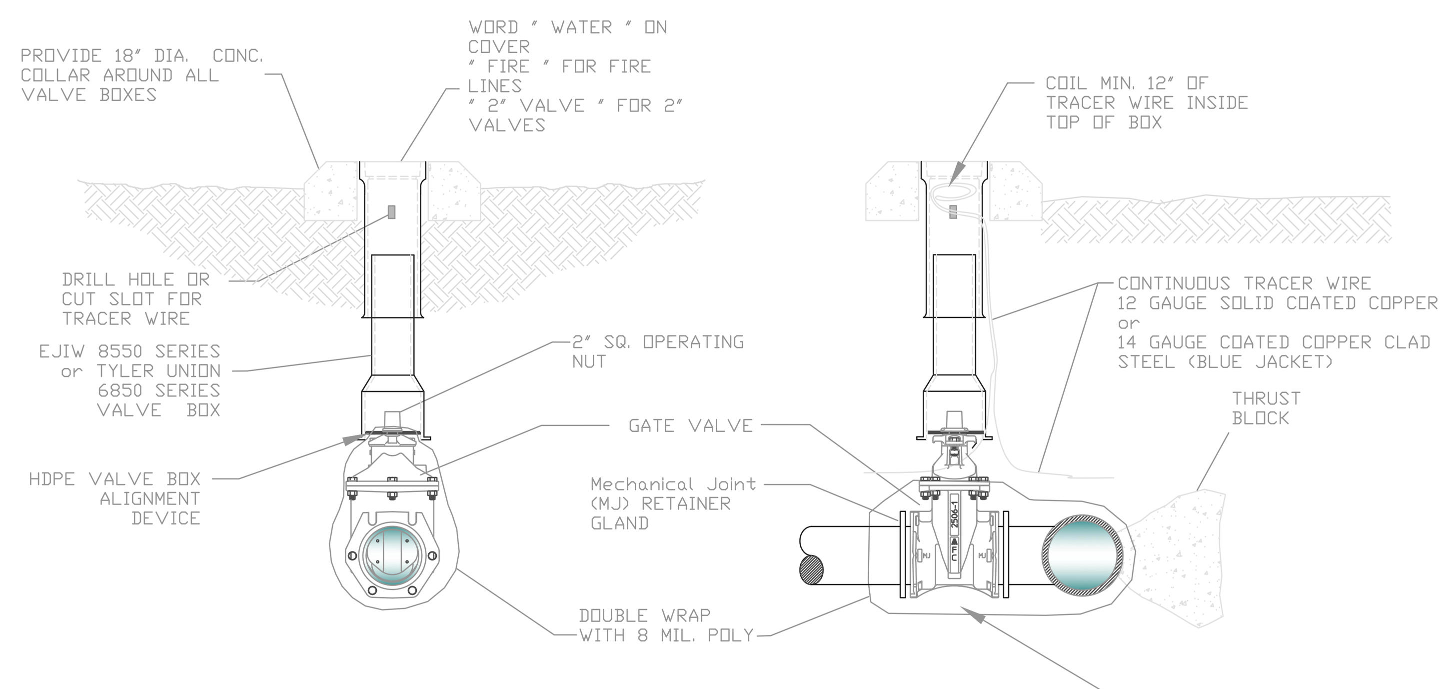

SECTION A-A

SECTION B-B

NOTES:

1. ALL VALVES SHALL BE SECURELY ANCHORED TO THE TEE.
2. ALL HARDWARE SHALL BE 316 STAINLESS STEEL.
3. IF DEPTH OF BURY EXCEEDS 4 FT., A VALVE STEM EXTENSION SHALL BE REQUIRED. THE VALVE STEM EXTENSION NUT SHALL BE WITHIN 24-INCHES TO 12-INCHES OF THE FINISHED SURFACE.

D3 GATE VALVE DETAIL
NTS

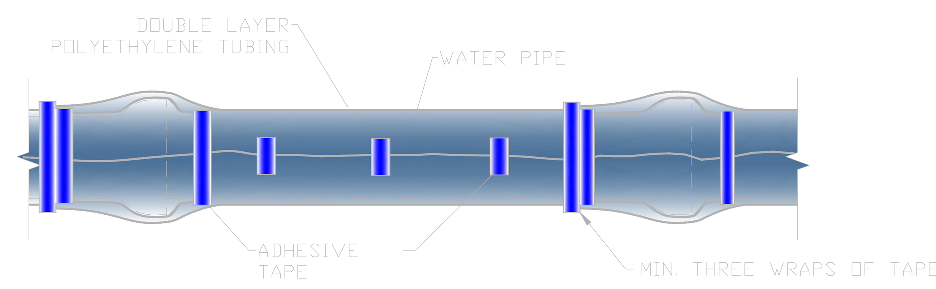

METHOD 'A'

METHOD 'A' USES ONE LENGTH OF POLYETHYLENE TUBE, OVERLAPPED AT THE JOINTS A MINIMUM OF 2 FEET.

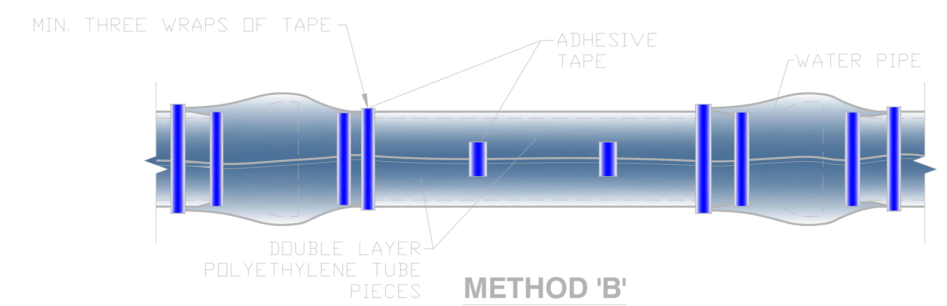

METHOD 'B'

METHOD 'B' USES SEPARATE PIECES OF POLYETHYLENE TUBE FOR THE BARREL OF THE PIPE AND THE JOINTS. SHORT PIECES SHALL BE APPROXIMATELY 6' LONG AND OVERLAP BARREL SECTION BY A MINIMUM OF 2 FEET.

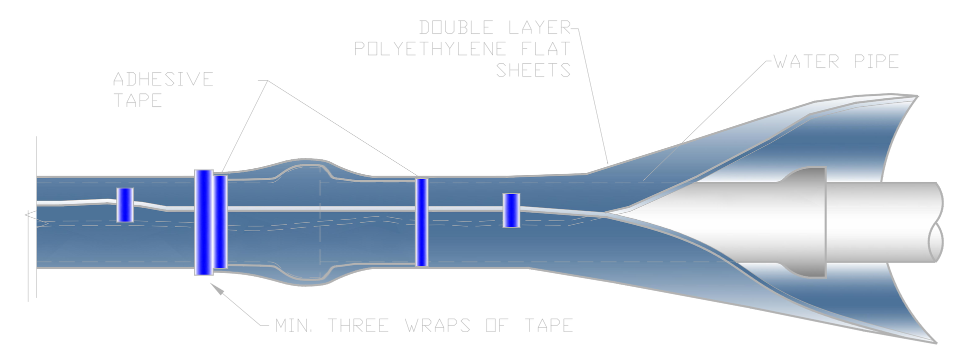

METHOD 'C'

METHOD 'C' - USED FOR PIPE-SHAPED AND ODD- SHAPED APPURTENANCES SUCH AS BENDS, REDUCERS, OFFSETS, VALVES, TEES, ETC.

ALL DUCTILE IRON PIPE AND FITTINGS SHALL BE DOUBLE POLY WRAPPED.

THE ANSI/AWWA C105/A21.5 STANDARD OUTLINES THREE METHODS OF INSTALLING POLYETHYLENE ENCASEMENT/ SLEEVING.

E6 DIP PIPE POLY WRAPPING DETAIL
NTS

GENERAL NOTES

1. City of Fayetetteville and ANSI / AWWA water details used for standardization.
2. Mechanical Joint (MJ) Restraints are required for all fittings.
3. All Ductile Iron Pipe (DIP) shall be double Poly Wrapped.

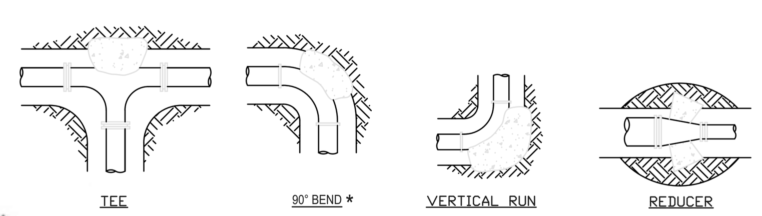

CERTIFICATE OF AUTHORIZATION
HODGES ENGINEERING
No. 3352
ARKANSAS

THRUST BLOCK SCHEDULE (2000 PSF SOIL, 200 PSI WATER PRESSURE, 100 PSI WATER HAMMER)												
BEARING AREA OF THRUST BLOCKS IN SQ. FT. (HORIZONTAL BENDS)						VOLUME OF THRUST BLOCK IN CU. FEET (VERTICAL BENDS)						
FITTING SIZE	PLUG TEE OR CAP	BEND ANGLE				FITTING SIZE	BEND ANGLE				ROD DIAM.	EMBED-MENT
		90° *	45°	22 1/2°	11 1/4°		90° *	45°	22 1/2°	11 1/4°		
2, 3, & 4	1.9	2.7	1.4	0.7	0.4	2, 3, & 4	35.5	19.2	9.8	4.9	.50"	30"
6	5.6	7.9	4.3	2.2	1.1	6	105.8	57.2	29.2	14.7	.75"	30"
8	9.6	13.6	7.4	3.8	1.9	8	181.9	98.5	50.2	25.2	.75"	30"
12	20.5	29.0	15.7	8.0	4.0	12	387.1	209.5	106.8	53.7	1.0"	30"
16	35.7	50.4	27.3	13.9	7.0	16	672.6	364.0	185.6	93.2	1.0"	36"
18	44.8	63.4	34.3	17.5	18.8	18	844.7	457.2	233.1	117.1	1.0"	36"
24	78.4	110.9	60.0	30.6	15.4	24	1478.7	800.3	408.0	205.0	1.5"	36"

THRUST BLOCK NOTES:

1. CONCRETE FOR THRUST BLOCKS - CLASS A CONCRETE SHALL DEVELOP NOT LESS THAN 3000 P.S.I. COMPRESSIVE STRENGTH AT 28 DAYS AND BE PLACED AGAINST UNDISTURBED SOIL.
2. ALL BENDS, BOTH HORIZONTAL AND VERTICAL, SHALL BE BACKED WITH CONCRETE. VERTICAL BENDS SHALL BE PLACED ON CONCRETE PADS WHERE BENDS TURN UP, OR LOADED WHERE BENDS TURN DOWN.
3. DOUBLE WRAP PIPE JOINTS IN 8 MIL "POLYETHLENE" BEFORE PLACING CONCRETE.
4. BEARING AREA SHOWN IN TABLE, IS BASED UPON A 2000 LB/SF. SOIL BEARING, AND UPON A PIPELINE PRESSURE OF 200 psi. PLUS 100 psi. WATER HAMMER. AREAS SHOWN SHALL BE ADJUSTED, SHOULD FIELD CONDITIONS VARY.
5. Mechanical Joint (MJ) RESTRAINTS ARE REQUIRED FOR ALL FITTINGS.
6. USE LONG-RADIUS FITTINGS WHEREVER POSSIBLE.
7. ALL BOLTS FOR FITTINGS SHALL BE 316 STAINLESS STEEL.
8. ALL DUCTILE IRON FITTINGS SHALL BE FUSION-BONDED EPOXY COATED INSIDE AND OUTSIDE IN ACCORDANCE WITH ANSI/AWWA C116/A21.16.
9. UNIT WEIGHT OF CONCRETE FOR VERTICAL THRUST BLOCKS IS 150 LBS/CU. FT.

F1 THRUST BLOCKING DETAIL
NTS

NOTES:

1. TAPPING SLEEVE SHALL BE FORD FAST OR APPROVED EQUAL.
2. AFTER THE TAP IS MADE, RE-TORQUE BOLTS ON SLEEVE TO SEAL TO FINAL SHAPE OF PIPE.
3. TAPPING SLEEVE AND VALVE SHALL BE DOUBLE WRAPPED WITH 8 MIL POLY.

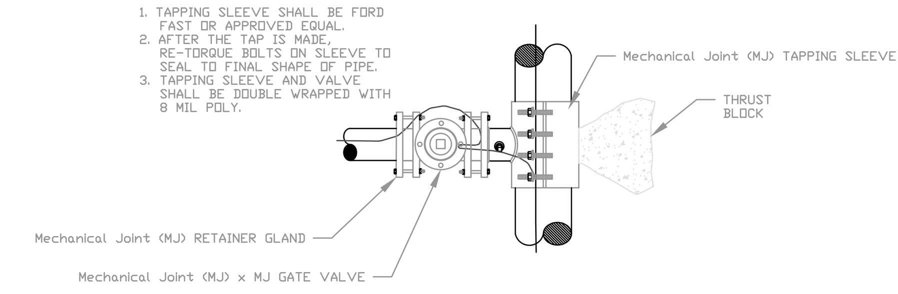

PLAN VIEW

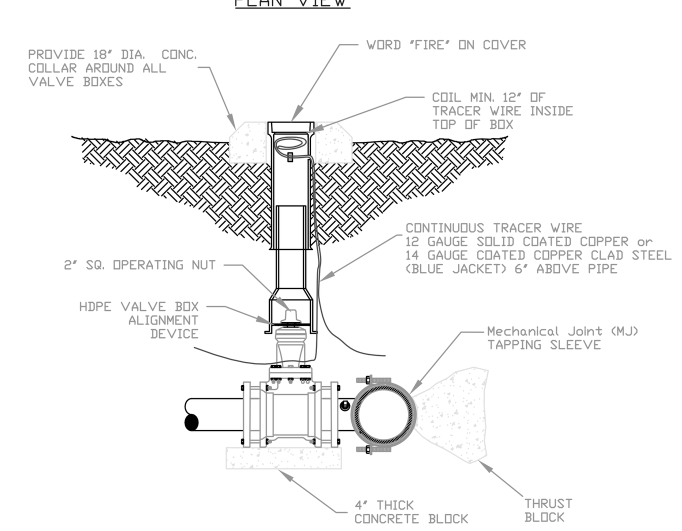

PROFILE VIEW

F4 TAPPING SLEEVE DETAIL
NTS

KEY PLAN (NTS)

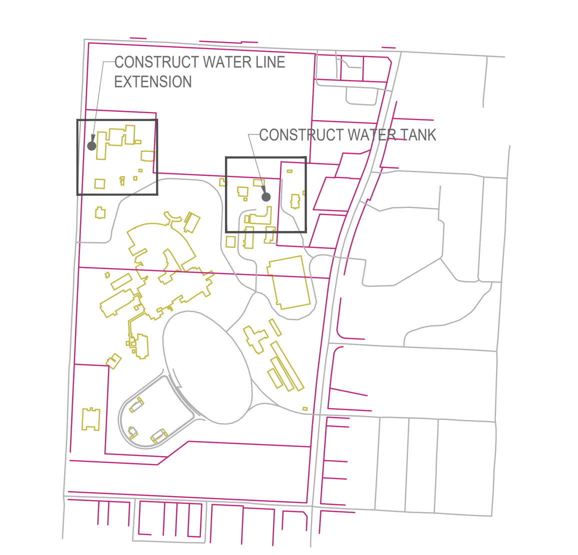

Revisions: Date:

CONSULTANTS

FP&C CONSULTANTS
FIRE PROTECTION
FP&C CONSULTANTS KC, LLC
1330 BURLINGTON STREET, STE. 200
NORTH KANSAS CITY, MO 64116

engineering | architecture | geospatial
SECURITY
GRW
ORPORATE DRIVE
LEXINGTON, KY 40503

Hodges Engineering
Strategies, Services & Solutions
CIVIL ENGINEER
HODGES ENGINEERING
231 SHORELINE DRIVE
MOUNTAIN HOME, AR 72653

Bernhard TME Engineering
STRUCTURAL ENGINEER
BERNHARD TME
BUILDING 2, 1 ALLIED DRIVE
SUITE 260

ARCHITECT/ENGINEER OF RECORD
A/E
JohnsonDanforth & Associates
2200 N. RODNEY PARHAM ROAD
SUITE 210
LITTLE ROCK, AR 72212
501-404-4811
jda@JohnsonDanforth.com
JDA PROJECT #: 2018.001

STATE OF ARKANSAS
REGISTERED PROFESSIONAL ENGINEER
No.8289
KEVIN E. HODGES
7/15/22

Office of Construction and Facilities Management
VA U.S. Department of Veterans Affairs

Drawing Title	Phase	Project Title	Project Number
WATER LINE DETAILS	CONSTRUCTION DOCUMENTS	CONSTRUCT NEW WATER STORAGE FACILITY	564-19-101
			Building Number: .
Approved: Project Director	FULLY SPRINKLERED	Location: FAYETTEVILLE, AR	Drawing Number
		Issue Date: 2022.07.15 / Checked: JCH / Drawn: KEH	CU109

VA FORM 08 - 6231

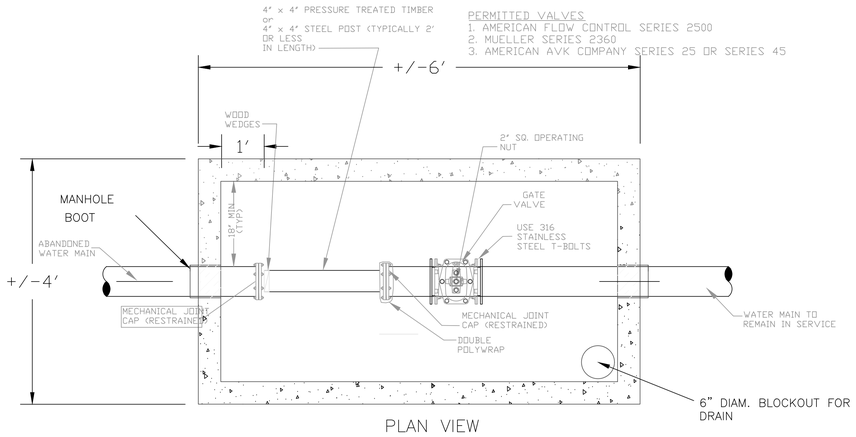

PLAN VIEW

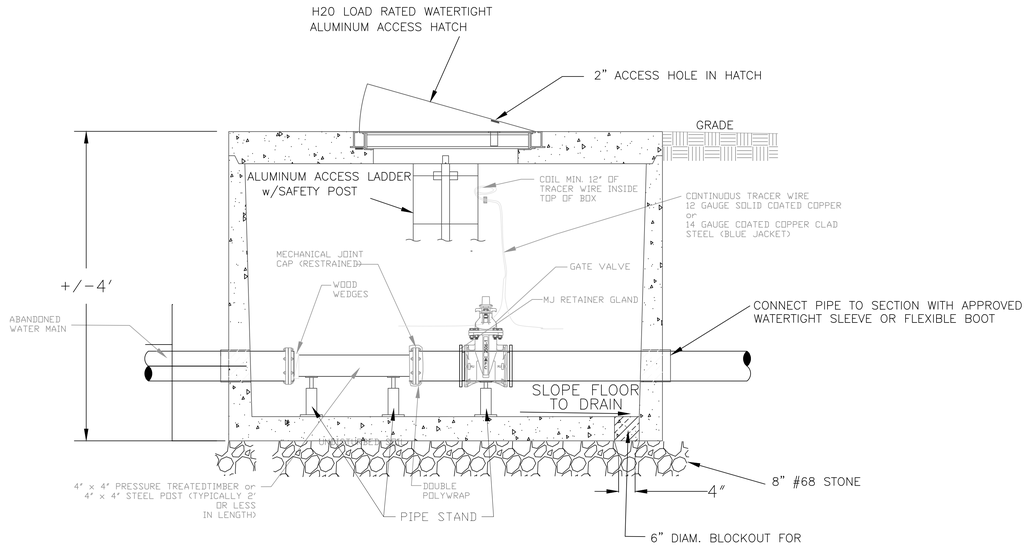

PROFILE VIEW

D6 CONCRETE WATER LINE VAULT (INSTALL VALVE, CAP, AND ABANDONED LINE TO OLD WATER TOWER)
NTS

KEY PLAN (NTS)

CERTIFICATE OF AUTHORIZATION
HODGES ENGINEERING
No. 3352
ARKANSAS

Revisions: Date:

CONSULTANTS

FP&C CONSULTANTS
FIRE PROTECTION
FP&C CONSULTANTS KC, LLC
1330 BURLINGTON STREET, STE. 200
NORTH KANSAS CITY, MO 64116

SECURITY
GRW
CORPORATE DRIVE
LEXINGTON, KY 40503

Hodges Engineering
CIVIL ENGINEER
HODGES ENGINEERING
231 SHORELINE DRIVE
MOUNTAIN HOME, AR 72653

Bernhard TME Engineering
STRUCTURAL ENGINEER
BERNHARD TME
BUILDING 2, 1 ALLIED DRIVE
SUITE 260

ARCHITECT/ENGINEER OF RECORD
A/E
JohnsonDanforth & Associates
2200 N. RODNEY PARHAM ROAD
SUITE 210
LITTLE ROCK, AR 72212
501-404-4811
jda@JohnsonDanforth.com
JDA PROJECT #: 2018.001

STATE OF ARKANSAS
REGISTERED PROFESSIONAL ENGINEER
No.8289
KEVIN E. HODGES
7/15/22

Office of Construction and Facilities Management
VA U.S. Department of Veterans Affairs

Drawing Title: WATER VAULT DETAILS	Phase: CONSTRUCTION DOCUMENTS	Project Title: CONSTRUCT NEW WATER STORAGE FACILITY	Project Number: 564-19-101
Approved: Project Director	FULLY SPRINKLERED	Location: FAYETTEVILLE, AR	Building Number: .
		Issue Date: 2022.07.15 / Checked: JCH / Drawn: KEH	Drawing Number: CU110

VA FORM 08 - 6231

GENERAL NOTES

1. Refer to Legend on CI100

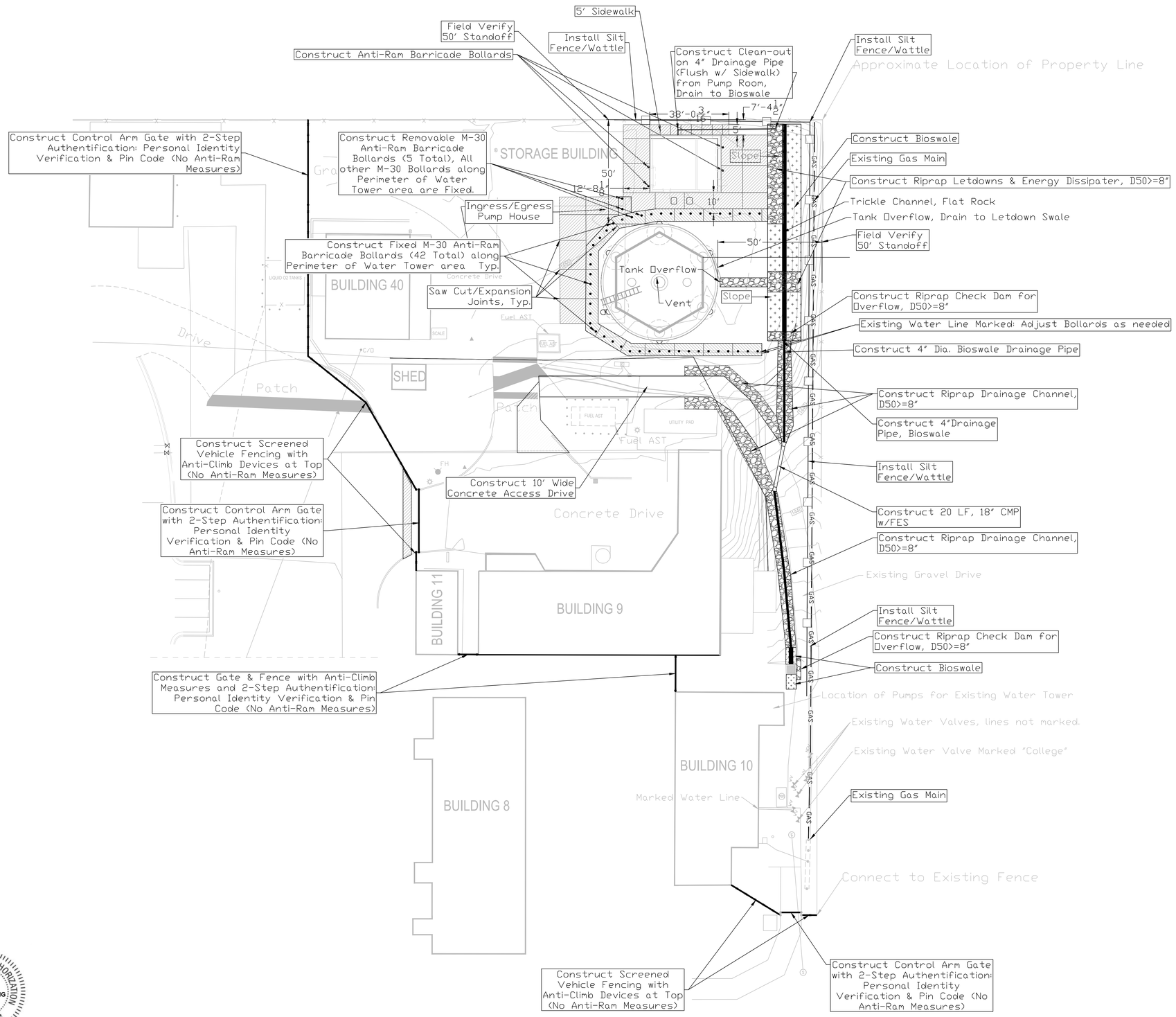

0 20 50 100

SCALE 1" = 20'

KEY PLAN (NTS)

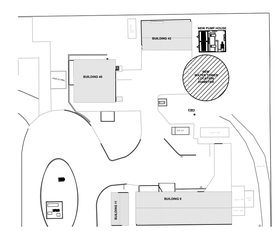

CERTIFICATE OF AUTHORIZATION HODGES ENGINEERING No. 3352 ARKANSAS

Revisions: Date:

CONSULTANTS

FPC CONSULTANTS — FIRE PROTECTION: FP&C CONSULTANTS KC, LLC, 1330 BURLINGTON STREET, STE. 200, NORTH KANSAS CITY, MO 64116

GRW — SECURITY: GRW, CORPORATE DRIVE, LEXINGTON, KY 40503

Hodges Engineering — CIVIL ENGINEER: HODGES ENGINEERING, 231 SHORELINE DRIVE, MOUNTAIN HOME, AR 72653

Bernhard TME Engineering — STRUCTURAL ENGINEER: BERNHARD TME, BUILDING 2, 1 ALLIED DRIVE, SUITE 260

ARCHITECT/ENGINEER OF RECORD

A/E
JohnsonDanforth & Associates
2200 N. RODNEY PARHAM ROAD
SUITE 210
LITTLE ROCK, AR 72212
501-404-4811
jda@JohnsonDanforth.com
JDA PROJECT #: 2018.001

STATE OF ARKANSAS REGISTERED PROFESSIONAL ENGINEER No.8289 KEVIN E. HODGES 7/15/22

Office of Construction and Facilities Management

VA U.S. Department of Veterans Affairs

Drawing Title: DRAINAGE PLAN	Phase: CONSTRUCTION DOCUMENTS	Project Title: CONSTRUCT NEW WATER STORAGE FACILITY	Project Number: 564-19-101
			Building Number: .
Approved: Project Director	FULLY SPRINKLERED	Location: FAYETTEVILLE, AR	Drawing Number: CG111
		Issue Date: 2022.07.15 / Checked: JCH / Drawn: KEH	

VA FORM 08 - 6231

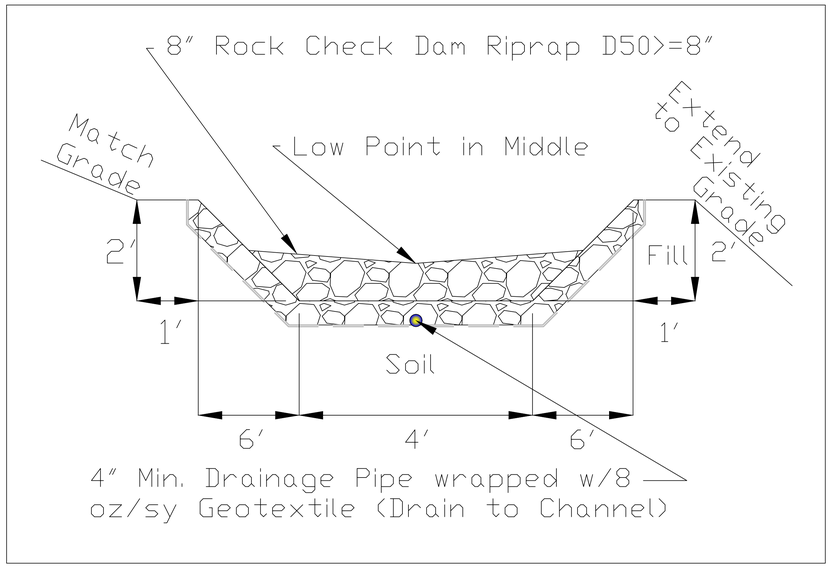

C1 Bioswale Check Dam Detail

NTS

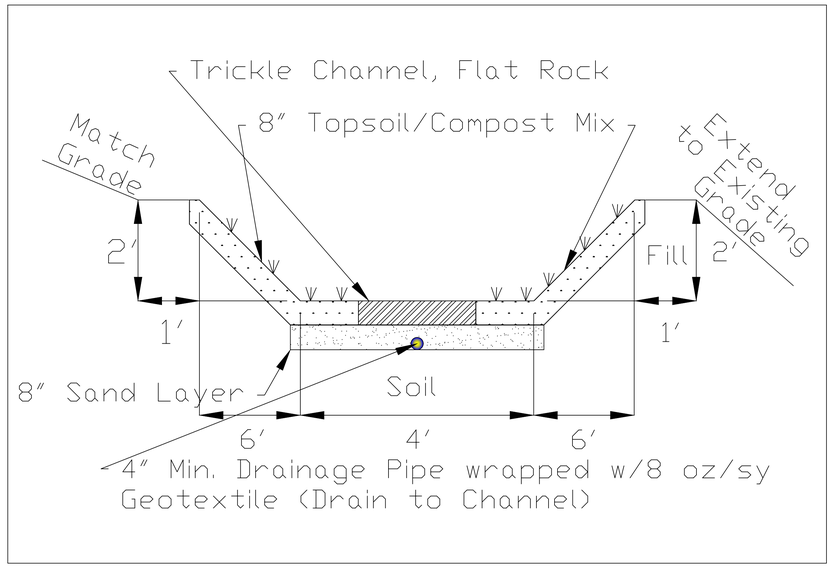

C5 Bioswale Detail

NTS

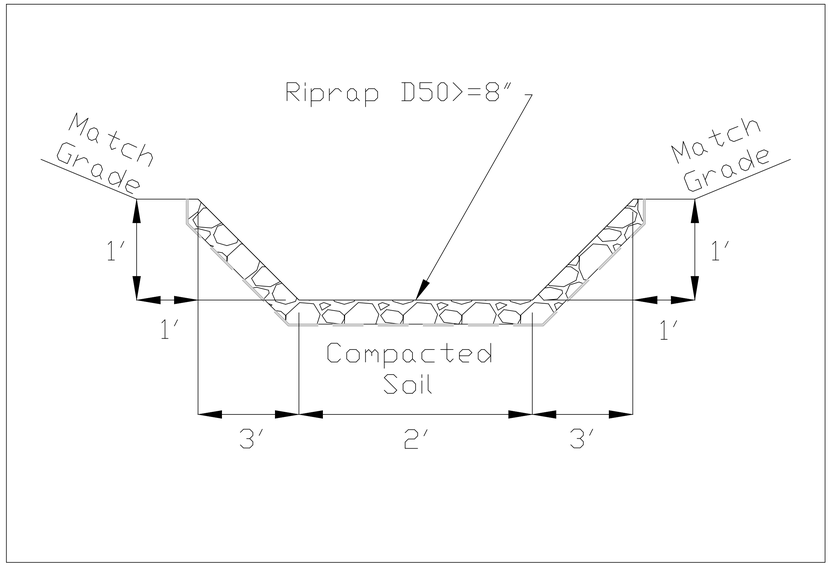

F1 Riprap Drainage Channel Detail

NTS

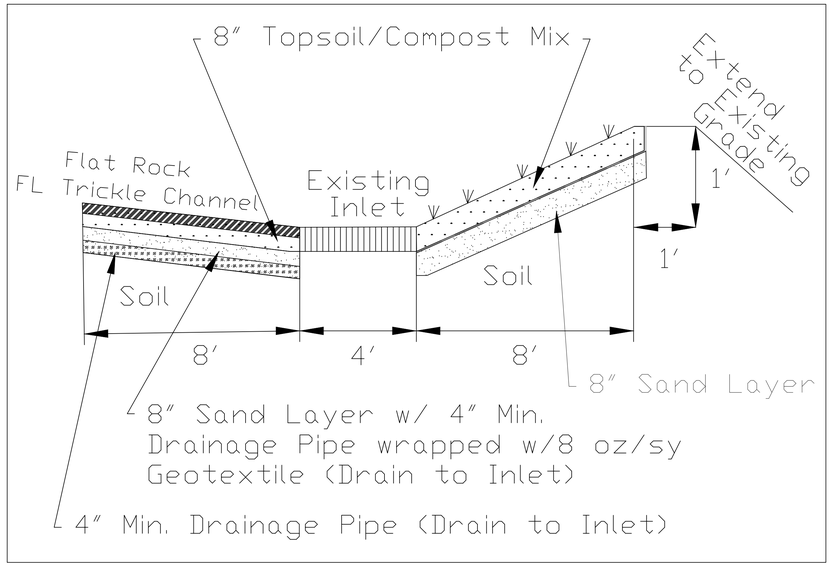

F5 Bioswale at Inlet Detail

NTS

KEY PLAN (NTS)

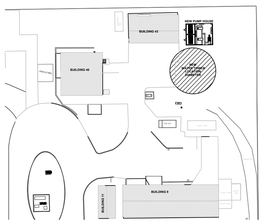

CERTIFICATE OF AUTHORIZATION HODGES ENGINEERING No. 3352 ARKANSAS

Revisions: Date:

CONSULTANTS

FP&C CONSULTANTS — FIRE PROTECTION: FP&C CONSULTANTS KC, LLC, 1330 BURLINGTON STREET, STE. 200, NORTH KANSAS CITY, MO 64116

GRW — SECURITY: GRW, 3RPORATE DRIVE, EXINGTON, KY 40503

Hodges Engineering — CIVIL ENGINEER: HODGES ENGINEERING, 231 SHORELINE DRIVE, MOUNTAIN HOME, AR 72653

Bernhard TME Engineering — STRUCTURAL ENGINEER: BERNHARD TME, BUILDING 2, 1 ALLIED DRIVE SUITE 260

ARCHITECT/ENGINEER OF RECORD

A/E
JohnsonDanforth & Associates
2200 N. RODNEY PARHAM ROAD
SUITE 210
LITTLE ROCK, AR 72212
501-404-4811
jda@JohnsonDanforth.com

JDA PROJECT #: 2018.001

STATE OF ARKANSAS REGISTERED PROFESSIONAL ENGINEER No.8289 KEVIN E. HODGES 7/15/22

Office of Construction and Facilities Management

VA U.S. Department of Veterans Affairs

Drawing Title: DRAINAGE PLAN DETAILS	Phase: CONSTRUCTION DOCUMENTS	Project Title: CONSTRUCT NEW WATER STORAGE FACILITY	Project Number: 564-19-101
Approved: Project Director	FULLY SPRINKLERED	Location: FAYETTEVILLE, AR	Building Number: .
		Issue Date: 2022.07.15 / Checked: JCH / Drawn: KEH	Drawing Number: CG112

VA FORM 08 - 6231

Maximum Slope Length for Silt Fence		
Slope Percent	Max. Slope Length (ft) Above Fence	
	Standard (18") Silt Fence	Reinforced (30") Silt Fence
2 (or less)	150	250
5	100	250
10	50	150
15	35	100
20	25	70
25	20	55
30	15	45
35	15	40
40	15	35
45	10	30
50	10	25

NOTES:
1. THE SLOPE LENGTH SHOWN IS THE DISTANCE FROM THE FENCE TO THE DRAINAGE DIVIDE OR THE NEAREST UPSLOPE CHANNEL.
2. SLOPE LENGTH CANNOT BE ADDRESSED BY USE OF MULTIPLE ROWS OF SILT FENCE.

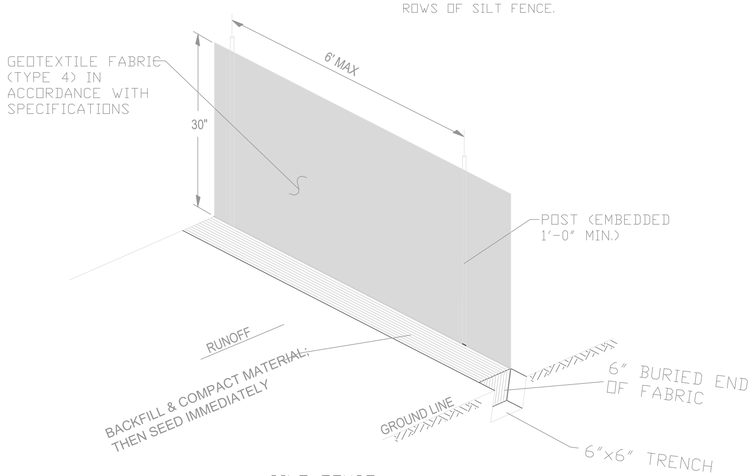

SILT FENCE

SILT FENCE NOTES

1. POSTS WHICH SUPPORT THE SILT FENCE SHALL BE INSTALLED ON A SLIGHT ANGLE TOWARD THE ANTICIPATED RUNOFF
SOURCE. POST MUST BE EMBEDDED A MINIMUM OF ONE FOOT.
2. THE TOE OF THE SILT FENCE SHALL BE TRENCHED IN WITH A SPADE OR MECHANICAL TRENCHER, SO THAT THE DOWNSLOPE
FACE OF THE TRENCH IS FLAT AND PERPENDICULAR TO THE LINE OF FLOW. HERE FENCE CANNOT BE TRENCHED IN (e.g. PAVEMENT), WEIGHT FABRIC FLAP WITH ROCK ON UPHILL SIDE TO PREVENT FLOW FROM SEEPING UNDER FENCE.
3. THE TRENCH MUST BE A MINIMUM OF 6 INCHES DEEP AND 6 INCHES WIDE TO ALLOW FOR THE SILT FENCE FABRIC TO BE LAID IN THE GROUND AND BACKFILLED WITH COMPACTED MATERIAL.
4. SILT FENCE SHOULD BE SECURELY FASTENED TO EACH SUPPORT POST OR TO WOVEN WIRE, WHICH IN TURN IS ATTACHED TO THE FENCE POST. THERE SHALL BE A 3 FOOT OVERLAP, SECURELY FASTENED WHERE ENDS OF FABRIC MEET.
5. REPAIR OR REPLACEMENT SHALL BE MADE PROMPTLY AS NEEDED.
6. SILT FENCE SHALL BE REMOVED WHEN THE SITE IS COMPLETELY STABILIZED SO AS NOT TO BLOCK OR IMPEDE STORM FLOW OR DRAINAGE.
7. ACCUMULATED SILT SHALL BE REMOVED WHEN IT REACHES A DEPTH OF HALF THE HEIGHT OF THE FENCE. THE SILT SHALL BE DISPOSED OF AT AN APPROVED SITE AND IN SUCH A MANNER AS TO NOT CONTRIBUTE TO ADDITIONAL SILTATION.

A1 SILT FENCE DETAIL
NTS

WATTLE SPACING	
SLOPE	MAXIMUM SPACING
1:1	20'
2:1	30'
3:1	40'
4:1	50'

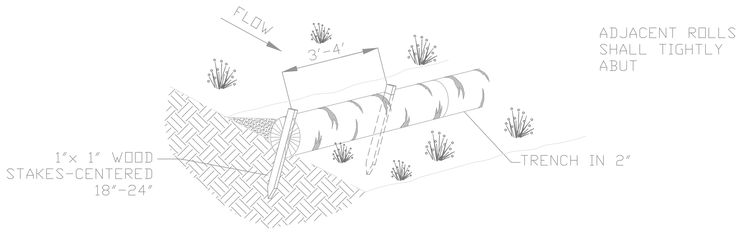

WATTLE DETAIL
N.T.S.

INSTALLATION NOTES

1. WATTLES SHALL CONSIST OF STRAW, COMPOST, EXCELSIOR, OR COCONUT FIBER.
2. NOT FOR USE IN CONCENTRATED FLOW AREAS.
3. THE WATTLES SHALL BE TRENCHED INTO THE GROUND A MINIMUM OF TWO (2) INCHES.
4. WATTLES SHALL BE INSTALLED PER MANUFACTURERS SPECIFICATIONS.
5. ON SLOPES, WATTLES SHOULD BE INSTALLED ON CONTOUR WITH A SLIGHT UPWARD CURVE AT THE END OF THE ROW IN ORDER TO CREATE PONDING.
6. RUNNING LENGTHS OF WATTLES SHOULD BE ABUTTED FIRMLY TO ENSURE NO LEAKAGE AT THE ABUTMENTS.
7. WHEN INSTALLING RUNNING LENGTHS OF WATTLES, BUTT THE SECOND WATTLE TIGHTLY AGAINST THE FIRST, DO NOT OVERLAP THE ENDS. STAKE THE WATTLES AT EACH END AND FOUR FOOT ON CENTER.
8. STAKES SHOULD BE DRIVEN THROUGH THE MIDDLE OF THE WATTLE. LEAVING 2 - 3 INCHES OF THE STAKE PROTRUDING ABOVE THE WATTLE. WHEN INSTALLING WATTLES ON SLOPES, DRIVE THE STAKES PERPENDICULAR TO THE SLOPE.
9 . DRIVE THE FIRST END STAKE OF THE SECOND WATTLE AT AN ANGLE TOWARD THE FIRST WATTLE IN ORDER TO HELP ABUT THEM TIGHTLY TOGETHER.
10. STAKING: THE CITY RECOMMENDS USING WOOD STAKES TO SECURE THE WATTLES. 1/2" TO 5/8" REBAR IS ALSO ACCEPTABLE WITH A SAFETY CAP.. BE SURE TO USE A STAKE THAT IS LONG ENOUGH TO PROTRUDE SEVERAL INCHES ABOVE THE WATTLE.
11. THE CONTRACTOR SHALL INSPECT WATTLES EVERY TWO WEEKS AND AFTER ANY SIGNIFICANT STORM EVENT AND MAKE REPAIRS OR REMOVE SEDIMENT ACCUMULATED BEHIND WATTLE AS NECESSARY.
12. SEDIMENT ACCUMULATED BEHIND WATTLE SHALL BE REMOVED WHEN THE SEDIMENT HAS ACCUMULATED TO ONE HALF THE DIAMETER OF THE WATTLE.
13. WATTLES SHALL REMAIN IN PLACE UNTIL THE UPSTREAM DISTURBED AREA IS STABILIZED AND IS ACCEPTED BY THE VETERANS ADMINISTRATION.

A5 WATTLE DETAIL
NTS

KEY PLAN (NTS)

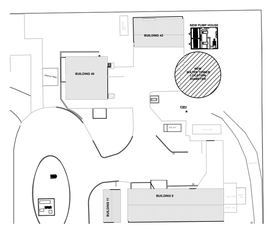

CERTIFICATE OF AUTHORIZATION HODGES ENGINEERING No. 3352 ARKANSAS

Revisions: Date:

CONSULTANTS

FPC CONSULTANTS
FIRE PROTECTION
FP&C CONSULTANTS KC, LLC
1330 BURLINGTON STREET, STE. 200
NORTH KANSAS CITY, MO 64116

SECURITY
GRW
CORPORATE DRIVE
EXINGTON, KY 40503

Hodges Engineering
CIVIL ENGINEER
HODGES ENGINEERING
231 SHORELINE DRIVE
MOUNTAIN HOME, AR 72653

Bernhard TME Engineering
STRUCTURAL ENGINEER
BERNHARD TME
BUILDING 2, 1 ALLIED DRIVE
SUITE 260

ARCHITECT/ENGINEER OF RECORD
A/E
JohnsonDanforth & Associates
2200 N. RODNEY PARHAM ROAD
SUITE 210
LITTLE ROCK, AR 72212
501-404-4811
joa@JohnsonDanforth.com
JDA PROJECT #: 2018.001

STATE OF ARKANSAS REGISTERED PROFESSIONAL ENGINEER No.8289 KEVIN E. HODGES 7/15/22

Office of Construction and Facilities Management
VA U.S. Department of Veterans Affairs

Approved: Project Director

Drawing Title: EROSION CONTROL DETAILS

Phase: CONSTRUCTION DOCUMENTS

FULLY SPRINKLERED

Project Title: CONSTRUCT NEW WATER STORAGE FACILITY

Location: FAYETTEVILLE, AR

Issue Date: 2022.07.15 | Checked: JCH | Drawn: KEH

Project Number: 564-19-101

Building Number: .

Drawing Number: CG113

VA FORM 08 - 6231

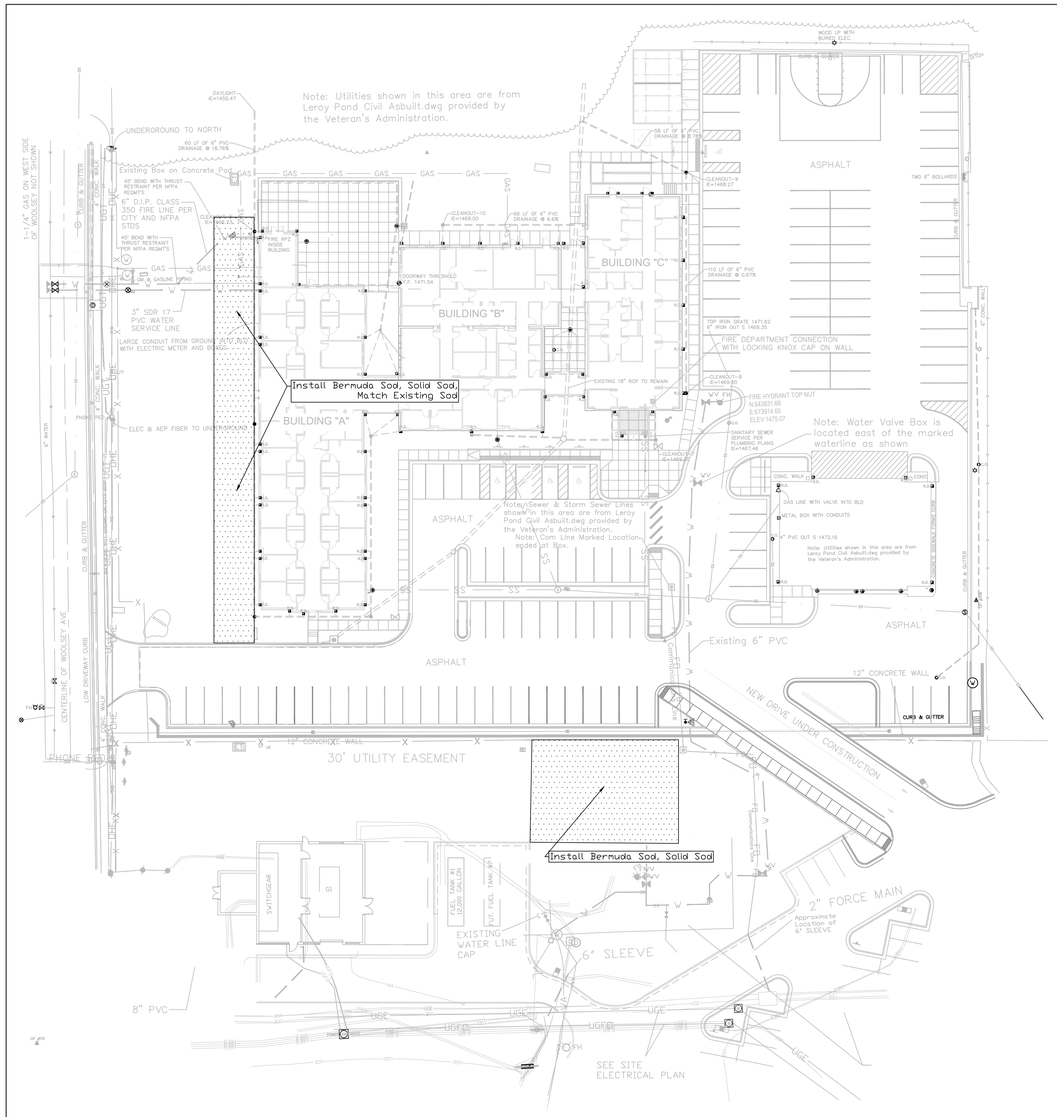

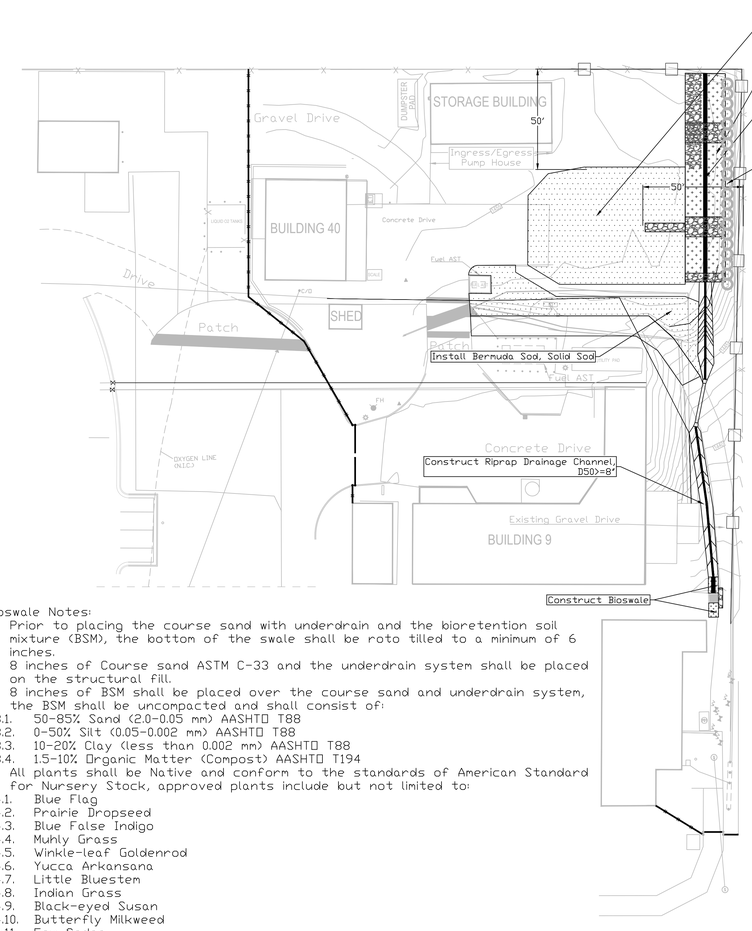

Bioswale Notes:

1. Prior to placing the course sand with underdrain and the bioretention soil mixture (BSM), the bottom of the swale shall be roto tilled to a minimum of 6 inches.
2. 8 inches of Course sand ASTM C-33 and the underdrain system shall be placed on the structural fill.
3. 8 inches of BSM shall be placed over the course sand and underdrain system, the BSM shall be uncompacted and shall consist of:
   - 3.1. 50-85% Sand (2.0-0.05 mm) AASHTO T88
   - 3.2. 0-50% Silt (0.05-0.002 mm) AASHTO T88
   - 3.3. 10-20% Clay (less than 0.002 mm) AASHTO T88
   - 3.4. 1.5-10% Organic Matter (Compost) AASHTO T194
4. All plants shall be Native and conform to the standards of American Standard for Nursery Stock, approved plants include but not limited to:
   - 4.1. Blue Flag
   - 4.2. Prairie Dropseed
   - 4.3. Blue False Indigo
   - 4.4. Muhly Grass
   - 4.5. Winkle-leaf Goldenrod
   - 4.6. Yucca Arkansana
   - 4.7. Little Bluestem
   - 4.8. Indian Grass
   - 4.9. Black-eyed Susan
   - 4.10. Butterfly Milkweed
   - 4.11. Fox Sedge
   - 4.12. Blue Lobbella
5. Quantity 111+/-, Plants shall be planted 3 feet on Centers.
6. Flagstone Trickle Channel shall consist of natural thin veneer stone with a Typ. width of 2 feet:
   - 6.1. Flagstone thickness shall be ¾" to 1-1/2"
   - 6.2. Top of Flagstone will be placed flush with the bioswale surface.

PLANT MATERIAL SCHEDULE

ITEM	SIZE & DESCRIPTION
Trees / Evergreen	
1. Quantity 21, East Palatka Holly Ilex opaca 'East Palatka' Note: Savannah Holly may be substituted for East Palatka if necessary due to availability upon approval of COR.	Specimen; tree-form with clear trunk, single trunk; height min. 8'-10"; 2"-2 1/2" min. cal; spread min. 36"-42"; well balanced form; containerized.
Turf	
2. 'U3' Bermuda Cynodon dactydon 'U3' Solid Sod	Solid sod, free of weeds, debris, insects and other grasses.

3. Upon approval of a bid, submit pictures of representative samples to the Resident Engineer for review. Approval of submittals does not preclude rejection on site after planting of materials not meeting the specifications.

4. Plant acceptance for shrubs shall be based on meeting the size specification rather than the container size. The container size specified is the minimum size acceptable.

5. All plant material used shall comply with the latest amended edition of the 'American Standards for Nursery Stock'.

GENERAL NOTES

1. Prior to landscape installation, review the subsurface drainage conditions. Install materials "high" if necessary, due to subsurface conditions. Contact the COR if existing conditions might jeopardize the plant materials' livability. Provide positive drainage of the subgrade in all turf areas and mass planting areas.

2. Provide positive drainage away from the building in all areas and provide smooth, continuous grades. Provide positive drainage away from air conditioning pads as applicable.

3. Stake the location of all trees and mass planting areas and obtain approval of the General Contractor and COR prior to installation. Tree locations may be adjusted based on the exterior light standard locations and signage.

4. Review the utility plans prior to installing the plant materials. Do not install trees or shrubs over underground drainage structures, utilities or directly under overhead power lines. Make minor adjustments in tree locations if necessary. Coordinate revised locations with the COR and General Contractor.

5. Provide a minimum 3'-0" diameter mulch ring with a 4" saucer for all trees located in turf areas. Provide 2" depth of mulch inside the saucers. Review subsurface drainage conditions. Install trees "high" if necessary due to subsurface conditions.

6. All container grown material shall be thoroughly hand watered upon arrival, while in the containers, before planting. Protect the tree trunks at all times during the removal from delivery trailer.

7. Prune any trees as requested by the COR.

8. All exterior mass planting and groundcover beds are to be full with material equally spaced, at the designated "on-center" spacing, at the time of planting.

9. Provide a 2" minimum depth of shredded hardwood mulch in all mass planting beds. Finished grades of the mulch shall be ¼" below the finished grade of adjacent paving or edging. Submit a sample of the mulch for approval by the COR.

10. All solid sod shall be 'U-3' Bermuda. Provide positive drainage in all turf areas. Solid sod to be laid on a smooth uniform grade with all joints tight and even.

11. Re-sod any areas disturbed along property line or edge of scope of work. Coordinate work with General Contractor. Provide smooth transition to existing grades not within scope of work.

12. Protect existing sod during landscape installation. Re-sod any areas disturbed. Provide smooth transition to existing turf with new solid sod. Any additional sod is to be laid on a smooth uniform grade with all joints tight and even. Match sod with existing turf.

13. Provide smooth transition from new areas of sod to existing sod areas to remain.

14. Provide temporary irrigation, by water trucks or other means, as required for sod establishment and maintenance as per the specifications and general notes. No permanent irrigation system shall be installed for sod areas. All temporary irrigation equipment shall be removed at the end of the plant establishment period. Provide a permanent drip bubbler irrigation system for all trees, shrubs and groundcover within scope of work.

15. Refer to Legend on CI100.

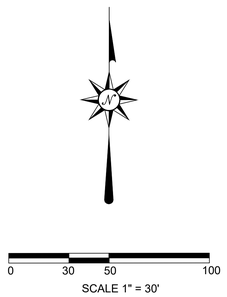

KEY PLAN (NTS)

CERTIFICATE OF AUTHORIZATION HODGES ENGINEERING No. 3352 ARKANSAS

Revisions: Date:

CONSULTANTS

FP&C CONSULTANTS — FIRE PROTECTION: FP&C CONSULTANTS KC, LLC, 1330 BURLINGTON STREET, STE. 200, NORTH KANSAS CITY, MO 64116

GRW — SECURITY: GRW, 1 CORPORATE DRIVE, LEXINGTON, KY 40503

Hodges Engineering — CIVIL ENGINEER: HODGES ENGINEERING, 231 SHORELINE DRIVE, MOUNTAIN HOME, AR 72653

Bernhard TME Engineering — STRUCTURAL ENGINEER: BERNHARD TME, BUILDING 2, 1 ALLIED DRIVE SUITE 260

ARCHITECT/ENGINEER OF RECORD

A/E
JohnsonDanforth & Associates
2200 N. RODNEY PARHAM ROAD
SUITE 210
LITTLE ROCK, AR 72212
501-404-4811
jda@JohnsonDanforth.com
JDA PROJECT #: 2018.001

STATE OF ARKANSAS REGISTERED PROFESSIONAL ENGINEER No.8289 KEVIN E. HODGES 7/15/22

Office of Construction and Facilities Management

VA U.S. Department of Veterans Affairs

Drawing Title: LANDSCAPE PLAN	Phase: CONSTRUCTION DOCUMENTS	Project Title: CONSTRUCT NEW WATER STORAGE FACILITY	Project Number: 564-19-101
Approved: Project Director	FULLY SPRINKLERED	Location: FAYETTEVILLE, AR	Building Number: .
		Issue Date: 2022.07.15 / Checked: JCH / Drawn: KEH	Drawing Number: CI114

VA FORM 08 - 6231

STRUCTURAL DESIGN CRITERIA

PER INTERNATIONAL BUILDING CODE **(IBC 2012)**

1. SEISMIC DESIGN:
   RISK CATEGORY: IV
   IMPORTANCE FACTOR: 1.5
   MAPPED SPECTRAL RESPONSE ACCELERATIONS: $S_S = 0.169$ $S_1 = 0.093$
   SITE CLASS: C
   SPECTRAL RESPONSE COEFFICIENTS: $S_{DS} = 0.136$, $S_{D1} = 0.106$
   SEISMIC DESIGN CATEGORY: C
   BASIC SEISMIC FORCE RESISTING SYSTEM: ORDINARY REINFORCED MASONRY SHEAR WALLS

   SEISMIC BASE SHEAR: V = 51.2 K
   SEISMIC RESPONSE COEFFICIENTS: $C_S = 0.101$
   RESPONSE MODIFICATION FACTOR: R =2.0, Cd = 1.75
   ANALYSIS PROCEDURE: EQUIVALENT LATERAL FORCE PROCEDURE (ELFP)

2. SNOW LOAD
   GROUND SNOW LOAD: P_g = 20 PSF (CITY OF FAYETTEVILLE)
   EXPOSURE COEFFICIENT, $C_e = 0.9$
   THERMAL FACTOR, $C_t = 1.0$
   IMPORTANCE FACTOR FOR SNOW, I = 1.2
   FLAT ROOF SNOW LOAD, P_f = 15.12 PSF

3. WIND LOAD
   DESIGN ULTIMATE WIND SPEED: 120 MPH
   RISK CATEGORY: IV
   EXPOSURE CATEGORY: C
   INTERNAL PRESSURE COEFFICIENTS: GCpi = ±0.18
   VELOCITY PRESSURE: q_h = 27.16 PSF

   COMPONENTS AND CLADDING DESIGN WIND PRESSURES

ROOF UPLIFT	
ZONE(2)	GROSS UPLIFT(1) (PSF)
1	-30.5
2	-36.2
3	-36.2

   1. REFERENCE ASCE 7 FOR SPECIFIC ZONE LOCATIONS AND EXTENTS.
   2. BASED ON EFFECTIVE AREA OF 100 FT

WALL PRESSURES	
ZONE(2)	GROSS PRESSURE (PSF)
4	-28.6
5	-31.7

5. ROOF LOADS:
   DEAD LOAD:
   ROOFING/INSULATION: 10 PSF
   SLAB/DECK: 69 PSF
   CONCRETE PONDING: 13 PSF
   MECH/ELEC: 20 PSF

   LIVE LOAD: 20 PSF (UNREDUCIBLE)

6. BLAST LOADING - PROVIDED BY BLAST ENGINEER

7. DESIGN SOIL CRITERIA AS FOLLOWS:
   THE FOUNDATION FOR THIS STRUCTURE HAS BEEN DESIGNED BASED UPON THE RECOMMENDATIONS OF THE SOIL AND FOUNDATION INVESTIGATION FOR THIS SITE BY HODGES ENGINEERING OF MOUNTAIN HOME, AR (870-421-0579) AND GTS, Inc. OF FAYETTEVILLE, AR (PROJECT NO. 21-1-5-120) (479-521-7645) DATED AUGUST 26, 2021.

ADHESIVE SET ANCHORS, REINFORCING BARS, & DOWEL NOTES

1. USE HILTI'S HIT-HY 270 SYSTEM OR APPROVED EQUAL FOR ATTACHMENT TO HOLLOW AND GROUT-FILLED MASONRY UNITS.
2. USE HILTI'S HIT-HY 200 SYSTEM OR APPROVED EQUAL FOR ATTACHMENT INTO SOLID SURFACES ONLY. (E.G., SOLID CONCRETE)
3. FOR REBAR AND DOWEL EMBEDMENT, USE HY200 ADHESIVE, OR APPROVED EQUAL AS NOTED ABOVE.
4. USE HILTI'S THREADED RODS OR APPROVED EQUAL UNLESS SPECIFICALLY NOTED OTHERWISE. SUBSTITUTION OF A-36 ALL-THREAD ROD WILL **NOT** BE ALLOWED. RODS ANCHORING INTO UNREINFORCED MASONRY SHALL BE BENT AT 22 1/2° ANGLE UNO.
5. WHERE BASE MATERIAL IS HOLLOW BLOCK, BRICK OR OTHER MATERIAL CONTAINING POCKETS OR VOIDS, A SCREEN TUBE, PER MANUFACTURERS RECOMMENDATIONS, SHALL BE EMPLOYED IN THE SYSTEM.
6. FOLLOW MANUFACTURERS REQUIREMENTS FOR MINIMUM DEPTH OF BASE MATERIAL, MINIMUM EDGE DISTANCES, AND MINIMUM BOLT/BAR SPACING.
7. UNLESS SPECIFIED OTHERWISE, ANCHORS SHALL BE EMBEDDED IN THE APPROPRIATE SUBSTRATE WITH A MINIMUM EMBEDMENT OF 8 TIMES THE NOMINAL ANCHOR DIAMETER OR THE EMBEDMENT DEPTH REQUIRED TO SUPPORT THE INTENDED LOAD.
8. POST-INSTALLED ANCHORS SHALL ONLY BE USED WHERE SPECIFIED ON THE CONSTRUCTION DOCUMENTS. THE CONTRACTOR SHALL OBTAIN APPROVAL FROM THE ENGINEER-OF-RECORD PRIOR TO INSTALLING POST-INSTALLED ANCHORS IN PLACE OF MISSING OR MISPLACED CAST-IN-PLACE ANCHORS. CARE SHALL BE TAKEN IN PLACING POST-INSTALLED ANCHORS TO AVOID CONFLICTS WITH EXISTING REINFORCING. HOLES SHALL BE DRILLED AND CLEANED IN ACCORDANCE WITH THE MANUFACTURER'S WRITTEN INSTRUCTIONS. SUBSTITUTION REQUESTS FOR PRODUCTS OTHER THAN THOSE SPECIFIED BELOW SHALL BE SUBMITTED BY THE CONTRACTOR TO THE ENGINEER-OF-RECORD ALONG WITH CALCULATIONS THAT ARE PREPARED & SEALED BY A REGISTERED PROFESSIONAL ENGINEER. THE CALCULATIONS SHALL DEMONSTRATE THAT THE SUBSTITUTED PRODUCT IS CAPABLE OF ACHIEVING THE PERTINENT EQUIVALENT PERFORMANCE VALUES (MINIMUM) OF THE SPECIFIED PRODUCT USING THE APPROPRIATE DESIGN PROCEDURE AND/OR STANDARD(S) AS REQUIRED BY THE BUILDING CODE. PROVIDE CONTINUOUS SPECIAL INSPECTION FOR ALL ADHESIVES AND MECHANICAL ANCHORS PER THE PRODUCT'S APPLICABLE ICC-ES OR IAPMO-ES EVALUATION REPORT (ICC-ES ESR). CONTACT MANUFACTURER'S REPRESENTATIVE FOR THE INITIAL TRAINING AND INSTALLATION OF ANCHORS AND FOR PRODUCT RELATED QUESTIONS AND AVAILABILITY.
   A. CONCRETE ANCHORS
      I. MECHANICAL ANCHORS SHALL HAVE BEEN TESTED AND QUALIFIED FOR USE IN ACCORDANCE WITH ACI 355.2 AND ICC-ES AC193 FOR CRACKED AND UNCRACKED CONCRETE RECOGNITION.
      II. ADHESIVE ANCHORS SHALL HAVE BEEN TESTED AND QUALIFIED FOR USE IN ACCORDANCE WITH ACI 355.4 AND ICC-ES AC308 FOR CRACKED AND UNCRACKED CONCRETE RECOGNITION.
   B. MASONRY ANCHORS
      I. ANCHORAGE TO SOLID-GROUTED CONCRETE MASONRY
         - MECHANICAL ANCHORS SHALL HAVE BEEN TESTED AND QUALIFIED FOR USE IN ACCORDANCE WITH ICC-ES AC01 OR AC106.
         - ADHESIVE ANCHORS SHALL HAVE BEEN TESTED AND QUALIFIED FOR USE IN ACCORDANCE WITH ICC-ES AC58.
      II. ANCHORAGE TO HOLLOW CONCRETE MASONRY/UNREINFORCED CLAY BRICK MASONRY
         - MECHANICAL ANCHORS SHALL HAVE BEEN TESTED AND QUALIFIED IN ACCORDANCE WITH ICC-ES AC106
         - ADHESIVE ANCHORS WITH SCREEN TUBES SHALL BE TESTED AND QUALIFIED IN ACCORDANCE WITH ICC-ES AC58 OR AC60, AS APPROPRIATE.

GENERAL INFORMATION

1. ALL COLUMNS SHALL BE CENTERED ON GRID LINES UNLESS NOTED OTHERWISE.
2. ALL COLUMN FOOTINGS SHALL BE CENTERED ON COLUMNS UNLESS NOTED OTHERWISE.
3. ALL WALL FOOTINGS SHALL BE CENTERED ON WALLS UNLESS NOTED OTHERWISE.
4. UNLESS OTHERWISE NOTED OR DETAILED, CONCRETE PADS FOR MECHANICAL EQUIPMENT SHALL BE 4" THICK (MINIMUM) AND REINFORCED WITH #3 @ 12" OC EACH WAY CENTERED.
5. SUBSTITUTION OF EXPANSION OR ADHESIVE ANCHORS FOR EMBEDDED ANCHORS SHALL NOT BE PERMITTED UNLESS SPECIFICALLY APPROVED IN WRITING BY THE STRUCTURAL ENGINEER OF RECORD PRIOR TO PLACING OF CONCRETE CONTAINING THE ANCHORS.
6. BACKFILL BOTH SIDES OF ALL FOUNDATION AND RETAINING WALLS EQUALLY UNTIL LOW SIDE IS UP TO FINISH GRADE. DO NOT BACKFILL ANY WALLS UNTIL CONCRETE HAS REACHED ITS SPECIFIED 28-DAY COMPRESSIVE STRENGTH.
7. PERMANENT STABILITY OF THE BUILDING AND COMPONENTS IS NOT PROVIDED UNTIL THE ERECTION IS COMPLETED AS SHOWN ON THE CONTRACT DRAWINGS. PER SECT 7.10.3 OF AISC CODE OF STANDARD PRACTICE FOR BUILDINGS AND BRIDGES MARCH 18, 2005. "TEMPORARY SUPPORTS, SUCH AS TEMPORARY GUYS, BRACES, FALSEWORK, CRIBBING OR OTHER ELEMENTS REQUIRED FOR THE ERECTION OPERATION WILL BE DETERMINED, FURNISHED AND INSTALLED BY THE ERECTOR."
8. WEIGHTS OF MECHANICAL EQUIPMENT SHOWN ON THE STRUCTURAL PLANS ARE FOR UNITS SPECIFIED BY THE MECHANICAL ENGINEER. CONTRACTOR SHALL VERIFY WEIGHTS AND ANY SUBSTITUTIONS THAT RESULT IN INCREASED WEIGHT SHALL BE APPROVED BY THE STRUCTURAL ENGINEER OF RECORD.
9. THE CONTRACTOR SHALL INSURE THAT NO CONSTRUCTION LOAD EXCEEDS THE DESIGN LIVE LOADS INDICATED ON THE STRUCTURAL DRAWINGS AND THAT THESE LOADS ARE NOT PLACED ON THE STRUCTURAL MEMBERS PRIOR TO THE TIME THAT ALL FRAMING MEMBERS AND THEIR CONNECTIONS ARE IN PLACE.
10. THE SIZE AND LOCATION OF EQUIPMENT PADS AND PENETRATIONS THROUGH THE STRUCTURE FOR MECHANICAL, ELECTRICAL, AND PLUMBING WORK SHALL BE VERIFIED BY THE CONTRACTOR. OPENINGS AND PENETRATIONS NOT SPECIFICALLY SHOWN ON THE STRUCTURAL DRAWINGS SHALL BE SUBJECT TO APPROVAL BY THE STRUCTURAL ENGINEER OF RECORD.
11. REFER TO ARCHITECTURAL DRAWINGS FOR ADDITIONAL INFORMATION TO BE COORDINATED WITH THE STRUCTURAL DRAWINGS.
12. ISOLATE THE SIDES AND TOP OF ANCHORED VENEER FROM THE STRUCTURE SO THAT LATERAL SEISMIC FORCES RESISTED BY THE STRUCTURE ARE NOT IMPARTED TO THE VENEER. SEE ARCHITECTURAL PLANS AND SPECIFICATION FOR JOINTS IN THE VENEER AND ATTACHMENTS TO THE WALLS.
13. PRIOR TO FABRICATION AND/OR ERECTION OF ANY MATERIALS, THE CONTRACTOR SHALL FIELD VERIFY ALL PERTINENT EXISTING DIMENSIONS, ELEVATIONS, AND CONDITIONS AND SHALL REPORT ANY DISCREPANCIES TO THE STRUCTURAL ENGINEER OF RECORD OR THE ARCHITECT IMMEDIATELY UPON DISCOVERY.
14. WATERSTOPS SHALL BE WATERSTOP-RX VOLCLAY BY AMERICAN COLLOID COMPANY OR EQUIVALENT UNLESS NOTED OTHWISE WATERSTOPS TO BE LOCATED SUCH THAT A 3" MINIMUM COVER IS MAINTAINED.
15. EXPANSION JOINT FILLER SHALL BE NON-EXTRUDING PREMOLDED MATERIAL COMPOSED OF FIBERBOARD IMPREGNATED WITH ASPHALT CONFORMING TO THE REQUIREMENTS OF ASTM D1751 UNLESS NOTED OTHERWISE.
16. THE PREPARATION OF THE SUBGRADE INCLUDING ALL PROOF-ROLLING AND UNDERCUTTING AND THE SELECTION, PLACEMENT, COMPACTION AND TESTING OF ALL FILL MATERIAL SHALL BE IN STRICT ACCORDANCE WITH THE RECOMMENDATIONS OF THE GEOTECHNICAL REPORT FOR THIS PROJECT.
17. THE GENERAL CONTRACTOR SHALL VERIFY THE SITE CONDITIONS INCLUDING UNDERGROUND UTILITIES BEFORE STARTING WORK AND SHALL NOTIFY THE STRUCTURAL ENGINEER OF RECORD OF ANY CONDITIONS ENCOUNTERED CONTRADICTORY TO THOSE SHOWN ON THE STRUCTURAL CONTRACT DOCUMENTS.
18. THE GENERAL CONTRACTOR SHALL COORDINATE THE ARCHITECTURAL, MECHANICAL, ELECTRICAL, PLUMBING AND CIVIL WORK WITH THE STRUCTURAL CONTRACT DOCUMENTS AND SHALL REPORT ANY SUSPECTED DISCREPANCIES OR OMISSIONS TO THE ARCHITECT IMMEDIATELY.THE STRUCTURAL CONTRACT DOCUMENTS DO NOT INCLUDE SHOP DRAWINGS, VENDOR DRAWINGS NOR ANY MATERIAL PREPARED AND SUBMITTED BY THE CONTRACTOR OR SUBCONTRACTORS.
19. REFERENCE TO STANDARD SPECIFICATIONS OF ANY TECHNICAL SOCIETY, ORGANIZATION OR ASSOCIATION OR TO CODES OF LOCAL OR STATE AUTHORITIES SHALL MEAN THE LATEST STANDARD, CODE,SPECIFICATION OR TENTATIVE SPECIFICATION ADOPTED AND PUBLISHED AT THE DATE OF TAKING BIDS UNLESS SPECIFICALLY STATED OTHERWISE.
20. SEE ARCHITECTURAL DRAWINGS FOR EXACT THICKNESS AND NUMBER OF LAYERS OF INTERIOR AND EXTERIOR SHEATHING, INSULATION, FLASHING, EXTERIOR FINISHES, WINDOW WALL SYSTEMS, ROOFING, EXPANSION JOINT COVERS, ETC. STRUCTURAL DRAWINGS DO NOT NECESSARILY DEPICT EXACT CONDITIONS OF NON-STRUCTURAL ELEMENTS.
21. FOR DIMENSIONS NOT SHOWN ON THE STRUCTURAL CONTRACT DOCUMENTS, SEE THE ARCHITECTURAL DRAWINGS.THE CONTRACTOR SHALL REVIEW THE STRUCTURAL DRAWINGS FOR SECTIONS AND DETAILS THAT ARE LABELED AS "TYPICAL" AND ARE NOT NECESSARILY REFERENCED ON THE STRUCTURAL PLANS WHERE THEY APPLY.
22. SEE ARCHITECTURAL DRAWINGS FOR EXACT PATTERN OF BRICK VENEER (I.E. RUNNING BOND, SOLDIER COURSES, ETC.) AT ALL LOCATIONS AND FOR THE TYPE OF MORTAR JOINT (I.E. FLUSH, RAKED, ETC.) ALSO, SEE ARCHITECTURAL DRAWINGS FOR EXACT SIZE, TYPE AND DETAILING OF STOREFRONT, CURTAIN WALL, INSULATION, FLASHING, ETC.
23. PROVIDE A VERTICAL BRICK CONTROL JOINT BETWEEN BRICK SUPPORTED BY STEEL FRAMING AND BRICK SUPPORTED DIRECTLY BY FOUNDATIONS.

STEEL ANGLE LINTEL NOTES

1. LINTEL SCHEDULE APPLIES UNLESS NOTED OR DETAILED OTHERWISE.
2. 8" MIN BEARING EACH END UNLESS NOTED OTHERWISE.
3. STEEL LINTEL ANGLES SHALL BE GALVANIZED.
4. SEE ARCH FOR LOCATION AND SIZE OF ALL OPENINGS IN BRICK VENEER.
5. LINTEL SCHEDULE IS BASED ON THE REQUIREMENT THAT ALL VERTICAL CONTROL JOINTS IN BRICK VENEER OCCUR AT LEAST 8" BEYOND END OF OPENING. IF THE REQUIREMENT IS NOT MET, THEN THE GENERAL CONTRACTOR MUST CONTACT THE STRUCTURAL ENGINEER IN WRITING FOR FURTHER INSTRUCTIONS.

STEEL ANGLE LINTEL SCHEDULE

WALL	OPENINGS UP TO 3'-6"	OPENINGS 3'-6" UP TO 8'-0"	OPENINGS 8'-0" UP TO 10'-0"
4" CMU OR BRICK VENEER	1-L4x4x1/4	1-L6x4x3/8 (LLV)	1-L7x4x3/8 (LLV)

LEGEND

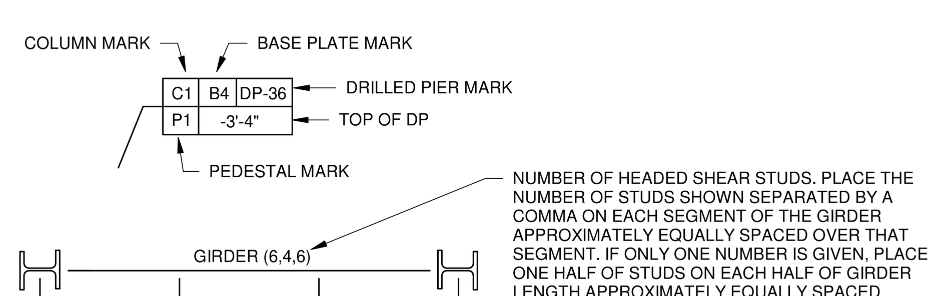

FOUNDATION NOTES

1. REFER TO "DESIGN SOIL CRITERIA" UNDER "STRUCTURAL DESIGN CRITERIA" IN THESE GENERAL NOTES FOR BEARING VALUES AND REFERENCED GEOTECHNICAL REPORT.
2. ALL SOIL PREPARATION SHALL BE IN ACCORDANCE WITH THE RECOMMENDATIONS GIVEN IN THE REFERENCED GEOTECHNICAL REPORT.
3. UNLESS NOTED OTHERWISE IN THE GEOTECHNICAL REPORT STRIP AREA OF ALL GRAVEL, SURFACE VEGETATION, TOPSOIL, AND ANY DEBRIS. REMOVE ALL EXISTING STRUCTURES, FOUNDATIONS, AND BELOW GRADE SITE FEATURES. AFTER STRIPPING AND MAKING REQUIRED CUTS, EXPOSED SUBGRADE SHOULD BE PROOF ROLLED WITH A 25 TON TANDEM-AXLE DUMP TRUCK. OVER EXCAVATE AND STABILIZE ANY SOFT OR UNSTABLE AREAS DISCOVERED BY PROOF ROLLING.
4. THE GEOTECHNICAL ENGINEER SHALL BE PRESENT DURING PROOF ROLLING AND SHALL INSPECT THE SUBGRADE PRIOR TO ANY FILL OPERATIONS. ALL COMPACTED FILL SHALL BE CONTINUOUSLY INSPECTED BY THE OWNER'S SELECTED INDEPENDENT TESTING LABORATORY.
5. IF THE SOIL AT THE BEARING ELEVATIONS SHOWN IS OF QUESTIONABLE BEARING VALUE, THE STRUCTURAL ENGINEER OF RECORD OR ARCHITECT SHALL BE NOTIFIED IMMEDIATELY.
6. UNLESS NOTED OTHERWISE IN THE GEOTECHNICAL REPORT WHERE FILL MATERIAL IS REQUIRED OVER IN-SITU SUBGRADE, SCARIFY SUBGRADE TO A MINIMUM DEPTH OF 9" AND ADJUST MOISTURE CONTENT TO EQUAL OPTIMUM MOISTURE CONTENT. COMPACT SCARIFIED SUBGRADE USING THE SAME REQUIREMENTS LISTED BELOW FOR COMPACTED STRUCTURAL FILL.
7. ALL FILL MATERIAL UNDER STRUCTURE SHALL COMPLY WITH REQUIREMENTS STATED IN GEOTECHNICAL REPORT UNLESS SPECIFICALLY NOTED OTHERWISE. AS A MINIMUM, ALL FILL MATERIAL UNDER STRUCTURE SHALL BE SANDY CLAY OR CLAYEY SAND EXHIBITING A LIQUID LIMIT LESS THAN 35. FILL MATERIAL SHALL BE PLACED IN LOOSE LIFTS NOT TO EXCEED 8" AND COMPACTED TO A DENSITY OF NOT LESS THAN 95% OF MODIFIEDPROCTOR MAXIMUM DRY DENSITY (ASTM D-1557) AT OR SLIGHTLY WET OF OPTIMUM MOISTURE CONTENT. IN PLACE MOISTURE AND DENSITY OF EACH LIFT SHALL BE DETERMINED BY IN-SITU FIELD TESTS PRIOR TO PLACING ADDITIONAL FILL.
8. AFTER FOOTING EXCAVATIONS ARE COMPLETED AND BEFORE PLACING CONCRETE, THE EXCAVATED AREAS SHALL BE INSPECTED AND APPROVED BY THE OWNER'S SELECTED INDEPENDENT TESTING LABORATORY.
9. PROVIDE A MINIMUM OF A 4" CLEAN FREE DRAINING GRANULAR SUB-BASE FILL BELOW ALL INTERIOR SLABS-ON-GRADE UNLESS NOTED OR DETAILED OTHERWISE. SUB-BASE SHALL MEET GRADATION REQUIREMENTS OF ASTM C-33 SIZE NO. 67 UNLESS SPECIFICALLY NOTED OTHERWISE.
10. A 15-MIL MINIMUM POLYETHYLENE FILM VAPOR RETARDER, MEETING THE REQUIREMENTS IN THE SPECIFICATIONS, SHALL BE PLACED BELOW ALL INTERIOR SLABS-ON-GRADE UNLESS SPECIFICALLY NOTED OTHERWISE.

SUBMITTAL PROCEDURES

1. TRANSMIT SUBMITTALS SUFFICIENTLY IN ADVANCE OF RELATED CONSTRUCTION ACTIVITIES TO AVOID UNNECESSARY DELAY. THE STRUCTURAL ENGINEER OF RECORD MAY WITHHOLD ACTION ON A SUBMITTAL REQUIRING COORDINATION WITH OTHER SUBMITTALS UNTIL ALL RELATED SUBMITTALS ARE RECEIVED.
2. SUBMIT DIGITAL COPIES THROUGH THE ARCHITECT FOR THE "SHOP DRAWINGS" REVIEW.
3. CONTRACTOR SHALL COMPLY WITH DIVISION ONE SECTION - "SUBMITTALS"
4. NO REPRODUCTIONS OF THE CONSTRUCTION DOCUMENTS ARE ACCEPTABLE FOR USE AS SHOP DRAWINGS.
5. ACTION STAMP: THE STRUCTURAL ENGINEER OF RECORD WILL STAMP EACH SUBMITTAL WITH A UNIFORM ACTION STAMP TO INDICATE THE ACTION TAKEN IN ONE OF FOUR OPTIONS LISTED BELOW:

   APPROVED .... WORK COVERED BY THE SUBMITTAL COMPLIES WITH THE REQUIREMENTS OF THE CONTRACT DOCUMENTS.

   APPROVED AS NOTED................ WORK COVERED BY THE SUBMITTAL MAY PROCEED PROVIDED IT COMPLIES WITH NOTATIONS OR CORRECTIONS ON THE SUBMITTAL AND REQUIREMENTS OF THE CONTRACT DOCUMENTS

   REVISE AND RESUBMIT .... WORK COVERED BY THE SUBMITTAL DOES NOT COMPLY WITH THE REQUIREMENTS OF THE CONTRACT DOCUMENTS AND MUST BE CHANGED TO COMPLY AND RESUBMIT THE ENTIRE SUBMITTAL.

   REJECTED .... WORK COVERED BY THE SUBMITTAL IS TOTALLY UNACCEPTABLE AND MAY NOT PROCEED.

DRILLED PIERS

1. THE BOTTOM OF DRILLED PIERS AND CONCRETE POURING OPERATION SHALL BE INSPECTED AND APPROVED BY THE GEOTECHNICAL TESTING LAB NAMED UNDER THE QUALITY CONTROL SECTION AND SHALL BE PAID BY THE GENERAL CONTRACTOR.
2. THE REPORT OF THE GEOTECHNICAL ENGINEER SHALL BE FORWARDED TO THE ARCHITECT AND THE STUCTURAL ENGINEER OF RECORD FOR REVIEW.
3. BOTTOM ELEVATIONS GIVEN FOR THE DRILLED PIERS ARE FOR BIDDING PURPOSES ONLY.
4. ALL CUTTINGS AND WATER SHALL BE REMOVED FROM THE SHAFT BEFORE INSPECTION AND PLACING CONCRETE.
5. NO ADD OR DEDUCT SHALL BE PAID IF BOTTOM ELEVATION OF PIER IS WITHIN ±2'-0" OF THE GIVEN ELEVATION IF ACTUAL DIFFERENCE IS MORE THAN ±2'-0", THE ADD OR DEDUCT SHALL BE BASED ON EXACT DIFFERENCE.
6. ALL HOLES SHALL BE TEMPORARILY CASED AS REQUIRED FOR CLEANOUT AND INSPECTION.
7. SEE THE SPECIFICATIONS FOR PAYMENT FOR ITEMS AND QUANTITIES. THERE WILL BE NO EXTRA PAY FOR ROCK EXCAVATION AND/OR BOULDER REMOVAL.

CONCRETE MASONRY NOTES

1. ALL MASONRY SHALL BE DESIGNED AND INSTALLED IN ACCORDANCE WITH ACI 530 AND ACI 530.1 AS MODIFIED BY THE REFERENCED BUILDING CODE.
2. ARRANGEMENT & BENDING OF REINFORCING STEEL SHALL BE IN ACCORDANCE WITH ACI DETAILING MANUAL LATEST EDITION.
3. REINFORCING STEEL SHALL BE NEW AND ALL BARS SHALL BE DEFORMED.
4. NET AREA COMPRESSIVE STRENGTH OF MASONRY F'm SHALL BE A MINIMUM OF 3,000 PSI AND A MINIMUM NET AREA COMPRESSIVE STRENGTH OF INDIVIDUAL UNITS SHALL BE 4,800 PSI.
5. LOAD BEARING CMU SHALL CONFORM TO ASTM C90, TYPE I OR ASTM C55, GRADE N. NON-LOAD BEARING CMU SHALL CONFORM TO ASTM C129, TYPE I.
6. MORTAR SHALL BE TYPE S CONFORMING TO PROPERTY OR PROTECTION REQUIREMENTS OF ASTM C270 WITH A MINIMUM COMPRESSIVE STRENGTH OF 3,000 PSI AT 28-DAYS.
7. ALL FILL CONCRETE SHALL HAVE A MINIMUM COMPRESSIVE STRENGTH (F'c) @ 28-DAYS OF 3000 PSI. AGGREGATE SHALL MEET THE REQUIREMENTS AS ASTM C-404 & SHALL HAVE A MAXIMUM SIZE OF 3/8" FOR COARSE GROUT AND 0.1" (#8 SIEVE SIZE) FOR FINE GROUT.
8. GROUT SHALL BE PLACED IN MAXIMUM LIFTS OF 4'-0". ALL GROUT SHALL CONFORM TO ASTM C476, FINE GROUT OR COARSE GROUT AS INDICATED BELOW.

   USE COARSE GROUT FOR ALL OPENINGS AND CELLS LARGER THAN 3"x5".

GROUT SPACE REQUIREMENTS

GROUT TYPE [1]	MAX GROUT POUR HEIGHT (FT)	MAX WIDTH OF GROUT SPACE[2,3] (IN)	MINIMUM GROUT SPACE DIMENSIONS FOR GROUT CELLS OF HOLLOW UNITS[3,4,5] (INxIN)
FINE	1'-0"	3/4"	1 1/2" X 2"
FINE	5'-0"	2"	2" X 3"
COARSE	1'-0"	1 1/2"	1 1/2" X 3"
COARSE	5'-0"	2"	2 1/2" X 3"

1. FINE & COARSE GROUT ARE DEFINED IN ASTM C476
2. FOR GROUT SPACING BETWEEN MASONRY WYTHES
3. GROUT SPACE DIMENSION IS THE CLEAR DIMENSION BETWEEN ANY MASONRY PROTUSION AND SHALL BE INCREASED BY THE DIAMETERS OF THE HORIZONTAL BARS WITHIN THE CROSS SECTION OF THE GROUT SPACE.
4. MIN GROUT SPACE DIM FOR ACC MASONRY UNITS SHALL BE 3"x3" OR A 3" Ø CELL

9. VERTICAL CELLS TO BE FILLED WITH CONCRETE OR GROUT SHALL HAVE VERTICAL ALIGNMENT SUFFICIENT TO MAINTAIN A CLEAR UNOBSTRUCTED CONTINUOUS VERTICAL CELL NOT LESS THAN THE DIMENSIONS SHOWN IN THE TABLE ABOVE.
10. VERTICAL AND HORIZONTAL REINFORCEMENT SHALL BE PROVIDED AS SHOWN ON THE DRAWINGS. PLACE VERTICAL REINFORCING BARS AT CORNERS, JAMBS OF OPENINGS, BELOW BEAM BEARING, AND IN WALLS AS INDICATED ON THE DRAWINGS. VERTICAL WALL REINFORCING BARS SHALL EXTEND CONTINUOUSLY FROM FOUNDATION TO EMBED AT LEAST 6" INTO TOP BOND BEAM AND TERMINATE WITH A STANDARD 90° HOOK.
11. DOWEL VERTICAL REINFORCING BARS OUT OF THE FOUNDATION OR STRUCTURE BELOW WITH BARS OF THE SAME SIZE AND SPACING ABOVE. DOWELS SHALL EXTEND INTO THE MASONRY WALL A MINIMUM OF THE LISTED LAP LENGTH FOR THE DOWEL BAR PLUS 2". THERE SHALL BE A FOUNDATION DOWEL FOR EACH VERTICAL REINFORCING BAR, EXCEPT AS OTHERWISE NOTED FOR JAMB BARS.
12. WIRE TYPE BAR POSITIONERS SHALL BE USED TO MAINTAIN THE POSITION OF VERTICAL BARS AND SHALL BE PLACED AT A MAXIMUM SPACING OF 100 TIMES THE BAR DIAMETER AND AT SPLICE LOCATIONS. DO NOT "WET-STICK" DOWELS OR REINFORCING BARS. CONSTRUCTION OF MASONRY MAY NOT CONTINUE MORE THAN TWO COARSES ABOVE THE TOPS OF VERTICAL BARS TO BE SPLICED.
13. LAPS OR SPLICES OF REINFORCING STEEL IN MASONRY, SEE SCHEDULE BELOW.

REINFORCING LAP SPLICES (CONTACT & NON-CONTACT) BASED ON ACI 530-05

BAR SIZE	NOM BAR DIAMETER (IN)	GAMMA	MIN COVER (K)[1] (IN)	LAP DEVEL DEVELOPMENT LENGTH LD (IN)	LD/DIA
#3	0.375	1.0	1.375	18	48
#4	0.5	1.0	1.800	24	48
#5	0.625	1.0	2.250	30	48
#6	0.75	1.3	3.000	43	57
#7	0.875	1.3	3.000	58	66
#8	1.00	1.3	3.000	67	87
#9	1.125	1.5	3.000	111	98
#10	1.25	1.5	3.000	141	111
#11	1.375"	1.5	3.000	173	123

F'_m = 3,000 PSI
F_y = 60,000 PSI

1. K IS THE MIN OF THE COVER OR FIVE (5) TIMES THE BAR DIA, WHICHEVER IS SMALLER.

14. PLACE HORIZONTAL BARS IN 8" DEEP BOND BEAM UNITS AT TOPS AND BOTTOMS OF ALL WALLS AND AT INTERMEDIATE LEVELS AS INDICATED ON THE DRAWINGS.
15. EXCEPT FOR LINTELS OR OTHER MASONRY BEAMS OVER OPENINGS, USE BOTTOMLESS BEAM BLOCK TO ALLOW CONTINUATION OF VERTICAL REINFORCEMENT THROUGH BOND BEAM.
16. CONTINUE BOND BEAM UNITS AND REINFORCING BARS UNINTERRUPTED AROUND CORNERS AND ACROSS WALL INTERSECTIONS. BOND BEAMS SHALL BE MADE CONTINUOUS AROUND CORNERS WITH ADDED CORNER BARS. BOND BEAM REINFORCING STEEL FOR INTERIOR AND EXTERIOR WALLS SHALL BE CONTINUOUS THROUGHOUT EXCEPT AT CONTROL AND ISOLATION JOINTS. AT CONTROL JOINTS, INTERMEDIATE BOND BEAM REINFORCEMENT SHALL BE DISCONTINUOUS. REINFORCEMENT IN BOND BEAMS AT ROOF OR FLOOR DIAPHRAGM LEVELS AND MEZZANINE LEVELS SHALL BE CONTINUOUS.
17. REINFORCING STEEL AROUND PERIMETER OF OPENINGS SHALL EXTEND NOT LESS THAN 40 BAR DIAMETERS OR 24", WHICHEVER IS GREATER, BEYOND CORNER OF OPENING.VERTICAL JAMB BARS WILL BE THE SAME SIZE AND NUMBER AS NORMAL VERTICAL REINFORCING. FOUNDATION DOWELS ARE ONLY REQUIRED WHEN BAR DEVELOPMENT LENGTH DOES NOT EXIST BELOW THE OPENING.
18. HORIZONTAL JOINT REINFORCING SHALL BE LADDER TYPE CONFORMING TO ASTM A82, NOT LESS THAN 9 GAUGE (W1.7), GALVANIZED AT EXTERIOR WALLS. FURNISH MATERIAL WITH PREFABRICATED CORNERS AND TEES. REINFORCING SHALL BE USED IN ALL PARTITIONS, SPACED 16" OC VERTICALLY, JOINTS LAPPED 7". PLACE REINFORCING IN FIRST BED JOINT ABOVE AND BELOW ALL CONCRETE SLABS AND WALL OPENINGS.
19. SUBSTITUTION OF BRICKS OR SOLID MASONRY UNITS INTO CMU WALLS AS SPACERS AND/OR SLOPING BOND BEAMS SHALL NOT BE PERMITTED.
20. LOCATION OF WALL CONTROL JOINTS SHALL BE AS INDICATED ON THE DRAWINGS. MAXIMUM SPACING BETWEEN CONTROL JOINTS TO BE 20-FT UNLESS NOTED OTHERWISE.
21. SUBSTITUTION OF EXPANSION OR ADHESIVE ANCHORS FOR EMBEDDED ANCHORS SHALL NOT BE PERMITTED UNLESS SPECIFICALLY APPROVED BY THE STRUCTURAL ENGINEER OF RECORD IN WRITING.
22. THE CONTACT SURFACE OF ALL FOUNDATIONS AND FLOORS WHICH ARE TO RECEIVE MASONRY WORK SHALL BE ROUGHENED AND CLEANED PRIOR TO START OF LAYING MASONRY. A COMPATIBLE BONDING AGENT SHALL BE APPLIED TO ENHANCE THE BOND OF THE MORTAR.
23. NO TEMPORARY OPENINGS OR PASSAGES OF ANY KIND SHALL BE ALLOWED IN ANY CMU WALL. CLEANOUTS ARE REQUIRED FOR HEIGHTS OVER 5'-0".
24. SUBMIT SHOP DRAWINGS FOR REVIEW BY ARCHITECT AND STRUCTURAL ENGINEER OF RECORD SHOWING:
    A. VERTICAL REINFORCING LOCATION AND METHOD OF SPLICE.
    B. LOCATION OF CORES FILLED WITH GROUT.
    C. BOND BEAM REINFORCING LOCATIONS, LENGTH, AND SPLICES.
    D. PROVIDE TEMPORARY BRACING FOR ALL MASONRY WALLS CONFORMING TO OSHA REQUIREMENTS UNTIL PERMANENT LATERAL SUPPORT IS COMPLETE.

CAST-IN-PLACE CONCRETE NOTES

1. CONCRETE DESIGN AND DETAILING SHALL CONFORM TO THE REQUIREMENTS OF ACI 318 AND ACI 301, LATEST EDITIONS.
2. MINIMUM ULTIMATE COMPRESSIVE STRENGTH OF CONCRETE AT 28 DAYS SHALL BE AS FOLLOWS UNLESS NOTED OTHERWISE:
   A. CONTINUOUS FOOTINGS, SPREAD FOOTINGS ----- 3000 PSI
   B. SLAB-ON-GRADE ----- 3000 PSI
   C. EXTERIOR AIR-ENTRAINED SLAB-ON-GRADE ----- 4000 PSI
   D. FOUNDATION WALLS ----- 4000 PSI
   E. CONCRETE PIER CAPS & GRADE BEAMS ----- 4000 PSI
   F. ELEVATED SLABS ON METAL DECK ----- 4000 PSI
3. ALL REINFORCING STEEL SHALL BE ASTM A615 GRADE 60 NEW AND DEFORMED. SEE LAP SCHEDULE,UNLESS NOTED OR DETAILED OTHERWISE.
4. CONTRACTOR SHALL PROVIDE REINFORCING SHOP DRAWINGS WHICH ADEQUATELY DEPICT THE REINFORCING BAR SIZES AND PLACEMENT. WRITTEN DESCRIPTION OF REINFORCEMENT WITHOUT ADEQUATE SECTIONS, ELEVATIONS AND DETAILS IS NOT ACCEPTABLE.
5. SUBMIT WRITTEN REPORTS OF EACH PROPOSED MIX DESIGN FOR EACH CLASS OF CONCRETE WITH CONCRETE CYLINDER TEST RESULTS AT LEAST 15 DAYS PRIOR TO START OF WORK.
6. ALL CONCRETE THAT WILL BE EXPOSED TO THE WEATHER SHALL HAVE 3% TO 5% AIR ENTRAINMENT.
7. ARRANGEMENT & BENDING OF REINFORCING STEEL SHALL BE IN ACCORDANCE WITH ACI DETALING MANUAL LATEST EDITION.
8. REINFORCING STEEL SHALL BE NEW & ALL BARS SHALL BE DEFORMED.
9. PROVIDE SUITABLE WIRE SPACERS, CHAIRS, TIES, ETC. FOR SUPPORTING REINFORCING STEEL IN THE PROPER POSITION WHILE PLACING CONCRETE. DO NOT 'WET STICK" DOWELS.
10. ALL WELDED WIRE REINFORCING SHALL BE LAPPED A MIN OF 6" AT THE SIDES AND ENDS.
11. MINIMUM CONCRETE PROTECTIVE COVERING FOR REINFORCEMENT AT SURFACES NOT EXPOSED DIRECTLY TO WEATHER OR GROUND SHALL BE 3/4" FOR SLABS, JOISTS, AND WALLS AND 1 1/2" FOR BEAM STIRRUPS, COLUMN TIES, OR SPIRALS UNO.
12. MINIMUM CONCRETE PROTECTIVE COVERING FOR REINFORCEMENT AT SURFACES WHICH WILL BE EXPOSED TO THE WEATHER OR BE IN CONTACT WITH THE GROUND SHALL BE 2" FOR BARS LARGER THAN #5 & 1 1/2" FOR #5 OR SMALLER BARS UNO. PROVIDE 3" COVER BELOW AND AT ENDS OF FOOTING BARS UNO.
13. LOCATIONS AND SIZES OF OPENINGS, SLEEVES, ETC. REQUIRED FOR OTHER TRADES MUST BE VERIFIED BY THESE TRADES BEFORE PLACING CONCRETE.
14. ALL SLOTS, SLEEVES, TRENCHES, AND OTHER EMBEDDED ITEMS SHALL BE SET AND SECURED AGAINST MOVEMENT BEFORE THE CONCRETE IS PLACED. SEE ARCHITECTURAL, ELECTRICAL, MECHANICAL, PLUMBING, AND VENDOR DRAWINGS FOR SIZES AND LOCATIONS. COORDINATE LOCATIONS, SPACINGS, AND SIZES WITH THE STRUCTURAL ENGINEER OF RECORD PRIOR TO PLACING CONCRETE.
15. AS PART OF THE SUBMITTAL PROCESS, THE ELECTRICAL AND MECHANICAL CONTRACTOR(S) SHALL SUBMIT A PROPOSED ROUTING PLAN FOR ALL PIPES, CONDUITS, OR OTHER DEVICES TO BE EMBEDDED IN THE CONCRETE. THE SUBMITTAL SHALL SHOW SPECIFIC SIZES AND LOCATIONS OF ALL PROPOSED EMBED ITEMS REFERENCING PROXIMITY TO BEAM, COLUMN, AND SLAB EDGES. NO ITEMS SHALL BE ALLOWED TO BE EMBEDDED IN THE CONCRETE WITHOUT PRIOR WRITTEN APPROVAL FROM THE STRUCTURAL ENGINEER OF RECORD.
16. CONDUITS & PIPES EMBEDDED IN CONCRETE SLABS MAY BE NO LARGER THAN 1/3 THE SLAB THICKNESS (BASED ON THE MAXIMUM OUTSIDE DIAMETER) AND SHALL HAVE A CENTER-TO-CENTER SPACING NO LESS THAN THREE (3) CONDUIT DIAMETERS REGARDLESS OF DIAMETER. THE MINIMUM CLEAR SPACING BETWEEN CONDUITS OR REINFORCING SHALL BE 1".
17. NO MORE THAN FOUR CONDUITS MAY BE PLACED ADJACENT TO EACH OTHER WITHOUT PRIOR APPROVAL IN WRITING FROM THE STRUCTURAL ENGINEER OF RECORD.
18. NO ALUMINUM CONDUITS, DEVICES, OR FIXTURES MAY BE EMBEDDED INTO THE CONCRETE SO THAT THE ALUMINUM IS IN DIRECT CONTACT WITH THE CONCRETE.
19. CORNER BARS SHALL BE PROVIDED FOR ALL HORIZONTAL REINFORCING BARS AT THE INTERSECTIONS AND CORNERS OF ALL STRIP FOOTINGS, BEAMS, AND WALLS UNLESS NOTED OTHERWISE. CORNER BARS SHALL BE OF THE SAME SIZE AND GRADE AS THE HORIZONTAL REINFORCING THEY CONNECT. MINIMUM LAP LENGTHS SHALL BE AS INDICATED IN THE CORNER BAR DETAIL UNLESS NOTED OTHERWISE.
20. FOR SLAB-ON-GRADE PROVIDE SAW-CUT CONTROL JOINTS AT INTERVALS OF 15'-0" OC MAX ACROSS THE WIDTH OF THE SLAB. REFER TO STRUCTURAL DRAWINGS FOR TYPICAL CONTROL JOINT LAYOUT AND DETAILS.
21. SAW-CUTS SHALL BE MADE AS SOON AS THE CONCRETE CAN SUPPORT THE SAW WITHOUT DAMAGING THE SURFACE (EIGHT (8) HOURS MAX FROM THE START OF THE CONCRETE PLACEMENT).
22. ALL STRUCTURAL CONCRETE EXPOSED TO VIEW TO BE SMOOTH FORMED FINISHED WITH 3/4" CHAMFERS AT ALL EXPOSED EDGES.

CONCRETE HOOK DEVELOPMENT LENGTHS

BAR SIZE	f 'c = 5000	f 'c = 4000	f 'c = 3000
#11	24"	27"	31"
#10	22"	24"	28"
#9	19"	22"	25"
#8	17"	19"	22"
#7	15"	17"	19"
#6	13"	15"	17"
#5	11"	12"	14"
#4	9"	10"	11"

* TABULATED VALUES ARE BASED ON GRADE 60 REINFORCING BARS AND NORMAL-WEIGHT CONCRETE.

CONCRETE LAP SPLICE SCHEDULE

BAR SIZE	f 'c = 5000		f 'c = 4000		f 'c = 3000	
	TOP BARS*	OTHER BARS	TOP BARS*	OTHER BARS	TOP BARS*	OTHER BARS
#11	101"	78"	113"	87"	131"	101"
#10	91"	70"	102"	79"	118"	91"
#9	81"	63"	91"	70"	105"	81"
#8	72"	55"	80"	62"	93"	72"
#7	63"	49"	70"	54"	81"	63"
#6	43"	33"	48"	37"	56"	43"
#5	36"	28"	40"	31"	47"	36"
#4	29"	22"	32"	25"	37"	29"

* LAP SPLICE LENGTHS ARE TYP UNLESS DETAILED OR NOTED OTHERWISE.

CERTIFICATE OF AUTHORIZATION
Bernhard TME, LLC
No. 2790
ARKANSAS

Revisions: Date:

CONSULTANTS

FIRE PROTECTION
FP&C CONSULTANTS KC, LLC
1330 BURLINGTON STREET, STE. 200
NORTH KANSAS CITY, MO 64116

SECURITY
GRW
801 CORPORATE DRIVE
LEXINGTON, KY 40503

CIVIL ENGINEER
HODGES ENGINEERING
231 SHORELINE DRIVE
MOUNTAIN HOME, AR 72653

STRUCTURAL ENGINEER
BERNHARD TME
BUILDING 2, 1 ALLIED DRIVE
SUITE 2600
LITTLE ROCK, AR 72202

ARCHITECT/ENGINEER OF RECORD
A/E
JohnsonDanforth & Associates
2200 N. RODNEY PARHAM ROAD
SUITE 210
LITTLE ROCK, AR 72212
501-404-4811
jda@JohnsonDanforth.com
JDA PROJECT #: 2018.001

STAMP
STATE OF ARKANSAS REGISTERED PROFESSIONAL ENGINEER No. 12944 DAVID KYLE BRIDGES 7/15/2022

Office of Construction and Facilities Management
VA U.S. Department of Veterans Affairs

Drawing Title	Phase	Project Title	Project Number
STRUCTURAL NOTES	CONSTRUCTION DOCUMENTS	CONSTRUCT NEW WATER STORAGE FACILITY	564-19-101
Approved: Project Director	FULLY SPRINKLERED	Location: FAYETTEVILLE, AR	Building Number: .
		Issue Date: 2022.07.15 / Checked: KB / Drawn: AW	Drawing Number: S001

\\jobfileserver2.tmecorp.com\2021\LIT\01-21-0122\3_Construction Docs\1_Dwgs\1_Working Set\01-21-0122 STRC RVT22.rvt
7/7/2022 4:39:16 PM

STEEL FRAMING NOTES

1. UNLESS SPECIFICALLY NOTED OTHERWISE, FABRICATION AND ERECTION OF STRUCTURAL STEEL SHALL BE IN ACCORDANCE WITH AISC SPECIFICATIONS, LATEST EDITION.
2. ALL STRUCTURAL STEEL HSS SQUARE/RECT SECTIONS SHALL BE ASTM A500, GRADE B (Fy=46 ksi). ALL STRUCTURAL STEEL WIDE FLANGE SHALL BE ASTM A992 GRADE 50. CHANNEL SHAPES AND ALL OTHER MISCELLANEOUS STEEL SHALL BE ASTM A36 OR A572. ALL STRUCTURAL STEEL HSS ROUND SHALL BE ASTM A500, GRADE B (Fy=42 ksi). ALL BASE PLATES SHALL BE ASTM A572-50.
3. ALL STRUCTURAL BOLTS CONNECTING STRUCTURAL STEEL SHALL BE ASTM A325 TYPE 1 WITH THREADS ALLOWED IN THE SHEAR PLANE, EXCEPT ANCHOR BOLTS SHALL BE ASTM F1554 GR55, MUST MEET S1 WELDABILITY REQUIREMENT OR GR36 AS NOTED.
4. WELD ELECTRODES SHALL BE E70XX.
5. DO NOT WELD BOTTOM FLANGE BRACES UNTIL ALL ROOF DEAD LOADS ARE IN PLACE.
6. AT HSS BEAM CONNECTION TO WIDE FLANGE OR HSS COLUMNS, WELD ALL AROUND WITH A COMBINATION OF 3/16" FILLET & FLARE BEVEL GROOVE WELDS (UNLESS NOTED OTHERWISE.)
7. UNLESS DETAILED OTHERWISE, ALL SHOP CONNECTIONS SHALL BE WELDED. UNLESS DETAILED OTHERWISE, ALL FIELD CONNECTIONS SHALL BE MADE USING 3/4"Ø, AND 1"Ø WHERE INDICATED, ASTM A325-N (OR ASTM F1852) HIGH STRENGTH BOLTS ("N" INDICATES BEARING TYPE WITH THREADS INCLUDED IN SHEAR PLANE). WASHERS SHALL BE INSTALLED UNDER NUTS WHEN REQUIRED BY THE SPECIFICATIONS OF STRUCTURAL JOINTS.
8. WHERE FIELD AND SHOP WELDS ARE INDICATED ON THE DRAWINGS, THEY SHALL BE THE SIZE AND TYPE NOTED. ALL WELDING OF STRUCTURAL STEEL SHALL BE DONE IN ACCORDANCE WITH THE LATEST EDITION OF AWS D1.1 CORRESPONDING TO THE AISC SPECIFICATION USED AND ALL WELDS INCLUDING FIELD WELDS SHALL BE MADE BY CERTIFIED WELDERS USING E70XX ELECTRODES.

   HIGH STRENGTH BOLTS (3/4"Ø, AND 1"Ø, ASTM A325-N (OR ASTM F1852) SHALL BE TIGHTENED TO PROVIDE, WHEN ALL BOLTS IN THE JOINT ARE TIGHT, A MINIMUM BOLT TENSION OF 28(k)FOR 3/4"Ø BOLTS & 51(k) FOR 1"Ø BOLTS. ONE OF THE FOLLOW METHODS SHALL BE USED:
   - A. POWER WRENCHES ADJUSTED TO STALL OR CUT-OUT AT THE CORRECT TENSION.
   - B. MANUAL TORQUE WRENCHES WITH TORQUE INDICATION SET TO GIVE THE CORRECT TENSION.
   - C. MANUAL WRENCHES USING THE "TURN-OF-NUT" METHOD OF ASSURING THE CORRECT BOLT TENSION.
   - D. DIRECT-TENSION INDICATORS
9. UNLESS SPECIFICALLY NOTED OTHERWISE, ALL HIGH-STRENGTH BOLTS (A325, F1852, AND A490) AND TWIST OFF BOLTS SHALL BE PRE-TENSIONED TO MEET SLIP-CRITICAL REQUIREMENTS EVEN IF THE JOINT IS DESIGNED AS A "SNUG-TIGHT" BEARING CONNECTION. ALL JOINTS SHALL BE DESIGNED TO BE BEARING TYPE CONNECTIONS UNLESS NOTED OTHERWISE.
10. STEEL FRAMES ARE NON-SELF-SUPPORTING AND COLUMN ANCHOR RODS ARE DESIGNED FOR A COMPLETED CONDITION ONLY. METAL ROOF DECK, BEAM-TO-COLUMN MOMENT CONNECTIONS, PORTAL FRAMES, AND DIAGONAL BRACES ARE REQUIRED TO PROVIDE LATERAL STABILITY FOR THE FRAME AND BUILDING. THIS INCLUDES RESISTANCE TO WIND AND SEISMIC FORCES DURING AND AFTER CONSTRUCTION. THE CONTRACTOR SHALL PROVIDE ALL TEMPORARY BRACING REQUIRED TO MAINTAIN STABILITY UNTIL THE LATERAL FORCE RESISTING SYSTEM FOR THE BUILDING IS COMPLETE.
11. ALL STEEL EXPOSED TO VIEW AT THE CLOSE OF PROJECT SHALL BE CLASSED AS "ARCHITECTURALLY EXPOSED STRUCTURAL STEEL" AND SHALL MEET THE REQUIREMENTS OF SECTION 10 OF AISC CODE OF STANDARD PRACTICE FOR STEEL BUILDINGS & BRIDGES UNLESS NOTED OTHERWISE.
12. ALL STEEL MEMBERS EXPOSED TO WEATHER SHALL BE HOT-DIPPED GALV. (INCLUDING MASONRY SUPPORT LINTELS). GALVANIZED OR PAINTED WITH TNEMEC EPOXY SYSTEM OR SIMILAR SYSTEM MEETING THE REQUIREMENTS FOR PAINTING STRUCTURAL STEEL IN THE PROJECT SPECIFICATIONS. ALL OTHER STEEL MEMBERS SHALL BE FURNISHED WITH A SHOP COAT OF TNEMEC RED OR GRAY OXIDE PRIMER OR SIMILAR SYSTEM MEETING THE REQUIREMENTS FOR PAINTING STRUCTURAL STEEL IN THE PROJECT SPECIFICATIONS. ALL PRIMERS SHALL BE COMPATIBLE WITH TOP COATINGS SPECIFIED.
13. ALL STEEL MEMBERS THAT ARE TO RECEIVE SPRAY OR TROWEL APPLIED, CEMENTITIOUS BASED, FIRE-RESISTING COATINGS SHALL BE FURNISHED WITHOUT PRIME COATINGS UNO.
14. BEARING ENDS OF ALL COLUMNS SHALL BE SQUARE CUT.
15. ALL HANGERS, CLIPS, INSERTS, ETC. SUSPENDED FROM THE FLOOR STRUCTURE OR THE ROOF STRUCTURE (BEAMS, JOISTS, AND DECK) SHALL BE INSTALLED PRIOR TO THE APPLICATION OF THE SPRAYED-ON FIREPROOFING. PATCH ANY FIREPROOFING DAMAGED AFTER THE INITIAL APPLICATION.
16. FIELD CUTTING, DRILLING, OR OTHER MODIFICATION OF STRUCTURAL STEEL COMPONENTS IS NOT PERMITTED WITHOUT WRITTEN APPROVAL OF THE STRUCTURAL ENGINEER OF RECORD. WHERE BEAM PENETRATIONS CANNOT BE AVOIDED OR WHERE CUTTING IS REQUIRED, THE CONTRACTOR SHALL SUBMIT, TO THE STRUCTURAL ENGINEER OF RECORD, ALL PERTINENT INFORMATION INCLUDING PENETRATION SHAPE, SIZE, LOCATION, AND METHOD OF CUTTING THE OPENINGS.
17. THE GENERAL CONTRACTOR SHALL BE RESPONSIBLE FOR INCLUDING THE COSTS FOR ALL MISCELLANEOUS STEEL IN THEIR BID REGARDLESS OF WHETHER OR NOT THOSE ITEMS ARE INDICATED ON THE STRUCTURAL DRAWINGS. THESE COSTS SHALL INCLUDE, BUT ARE NOT LIMITED TO, MISCELLANEOUS STEEL ITEMS SHOWN ON ARCHITECTURAL, CIVIL, MECHANICAL, PLUMBING, AND ELECTRICAL DRAWINGS.

COMPOSITE BEAM NOTES

1. HEADED STUD CONNECTORS SHALL BE AUTOMATICALLY END WELDED THROUGH THE METAL FLOOR DECK ALONG CENTERLINE OF BEAMS PER MANUFACTURER'S RECOMMENDATION.
2. HEADED STUD CONNECTORS, AFTER INSTALLATION, SHALL EXTEND NOT LESS THAN 1 1/2" ABOVE THE TOP OF THE STEEL DECK & NOT MORE THAN 1/2" BELOW THE FINISHED SURFACE OF THE CONCRETE. HEADED STUD SHEAR CONNECTORS SHALL BE 3/4" Ø x 3 7/8" LONG BEFORE WELDING AT SPACING DESIGNATED (24" OC MAX) UNLESS NOTED OTHERWISE. HEADED STUD CONNECTORS AND SHALL NOT BE LESS THAN FOUR (4) TIMES THE STUD DIAMETER IN LENGTH.
3. HEADED STUD CONNECTORS SHALL HAVE AT LEAST ONE INCH OF LATERAL CONCRETE COVER EXCEPT FOR CONNECTORS INSTALLED IN THE RIBS OF FORMED STEEL DECK. MINIMUM DISTANCE FROM THE BASE OF THE RIB TO THE BASE OF THE STUD SHALL BE 1/2" UNLESS NOTED OTHERWISE.
4. THE MINIMUM CENTER-TO-CENTER SPACING OF HEADED STUD CONNECTORS SHALL BE SIX TIMES THE STUD DIAMETER ALONG THE LONGITUDINAL AXIS OF THE BEAM AND FOUR TIMES THE STUD DIAMETER TRANSVERSE TO THE LONGITUDINAL AXIS OF THE BEAM. IN FORMED STEEL DECKS ORIENTED PERPENDICULAR TO THE LONGITUDINAL AXIS OF THE BEAM, THE MINIMUM CENTER-TO-CENTER SPACING SHALL BE FOUR TIMES THE STUD DIAMETER IN ANY DIRECTION.
5. HEADED STUD CONNECTORS MAY NOT BE INSTALLED ON THE FLANGES OF BEAMS THAT ARE LESS THAN 0.4 TIMES THE STUD DIAMETER UNLESS THEY ARE DIRECTLY OVER THE WEB. SHOULD DECK LAYOUT AND STUD SPACING CAUSE A CONFLICT WITH THIS REQUIREMENT. CONTACT THE STRUCTURAL ENGINEER OF RECORD FOR A RESOLUTION PRIOR TO INSTALLATION.

STEEL FLOOR DECK (COMPOSITE & NON-COMPOSITE)

1. ALL DECK SHALL BE FURNISHED AND INSTALLED PER THE REQUIREMENTS OF THE STEEL DECK INSTUTITE (SDI). THE CONTRACTOR SHALL FOLLOW ALL RECOMMENDATIONS PRACTICES IN THE SDI MANUAL.
2. WHERE STEEL DECK IS PART OF A RATED ASSEMBLY SUPPLY ALL DECK AND COMPONENTS, WHICH COMPLY WITH REQUIREMENTS OF UNDERWRITERS LABORATORIES (UL) FOR EACH TYPE OF ASSEMBLY SPECIFIED, REFERANCE PLANS & SPECIFICATIONS. WHERE DECK IS TO RECIEVE SPRAY FIREPROOFING, FINISHES SHALL BE COMPATIBLE W/ FIREPROOFING MATERIAL IS APPLIED, THE DECK SURFACE TO BE TREATED SHALL BE FREE OF RUST, SCALE, OIL, OR OTHERCONTAINANTS OR ELEMENTS WHICH WILL IMPAIR BOND.
3. FLOOR DECK SHALL BE THE SIZE AND CONFIGURATIONS SHOWN ON THE STRUCTURAL PLANS. ALL DECK SHALL GALVANIZED WITH A G90 COATING, BOTH SIDES, UNO.
4. THE DECK SHALL BE FASTEN TO THE SUPPORTING STEEL IN ACCORDANCE WITH THE MANUFACTURER'S INSTRUCTIONS. MINIMUM DECK FASTENING SHALL BE AS FOLLOWS: FOUR (4)-5/8" ROUND PUDDLE WELDS AT ENDS OF EACH 36" WIDE PANEL AND AT EACH INTERMEDIATE SUPPORT. SIDELAP SEAMS TO BE FASTENED W/ #10 TEKS AT 24" OC. LONG PANEL SIDES AT SUPPORTS TO BE FASTENED W/ 5/8" ROUND PUDDLE WELDS AT 12" OC ALONG FULL LENGTH OF PANEL AND AT 6" OC AROUND PERIMETER OF OPENINGS UNO.
5. ALTERNATE FASTENING OPTIONS USING MECHANICAL FASTENERS, POWDER-ACTUATED, OR SCREWS MAY BE CONSIDERED, IF SUBMITTED BY THE CONTRACTOR. ALTERNATE SYSTEMS AND DOCUMENTATION CERTIFYING THAT THE PROPOSED SYSTEM PROVIDES AT LEAST THE SAME UPLIFT AND DIAPHRAGM SHEAR RESISTANCE AS THE SYSTEM AND PATTERN SPECIFIED MUST BE SUBMITTED TO THE STRUCTURAL ENGINEER OF RECORD PRIOR TO USE.
6. FOR COMPOSITE DECK, HEADED STUD CONNECTORS WELDED THROUGH THE DECK, MAY BE COUNTED AS PART OF THE REQUIRED DECK ATTACHMENT PATTERN.
7. PROVIDE A 1 1/2" MINIMUM BEARING AND A 4" LAP AT THE SPLICE POINT OF ALL PIECES OF DECK.
8. WHERE POSSIBLE, ALL DECKING SHALL BE 3-SPAN CONTINUOUS, MINIMUM. DECKING SPECIFIED ON THIS PROJECT ASSUMES A 3-SPAN CONDITION UNLESS NOTED OTHERWISE. THE CONTRACTOR SHALL PROVIDE HEAVIER GAUGE DECK, AS REQUIRED, FOR ONE OR TWO SPAN CONDITIONS TO MEET EQUIVALENT LOAD CAPACITY OF THE SPECIFIED DECK UNDER A 3-SPAN CONDITION.
9. STEEL FLOOR DECK SHALL NOT BE USED TO SUPPORT LOAD FROM PLUMBING HVAC DUCTS, LIGHT FIXTURES, ARCHITECTURAL ELEMENTS, OR EQUIPMENT OF ANY KIND UNLESS SPECIFICALLY NOTED.
10. WHERE DECK RIBS ARE CUT AT PENETRATIONS, PROVIDE DECK SUPPORT ANGLES OR DECK STIFFENERS AS REQUIRED.
11. SUPPLY 8" WIDE, MINIMUM, PLATES MATCHING DECK GAUGE OR HEAVIER FOR ALL RIDGE, VALLEY, AND CHANGE IN DECK DIRECTION LOCATIONS, WHICH DO NOT FALL OVER A SUPPORTING MEMBER AT LEAST 4" WIDE.
12. UNLESS NOTED OTHERWISE, PROVIDE 6X6-W1.4XW1.4 WWF REINFORCING CENTERED IN THE CONCRETE SLAB.
13. THE FOLLOWING ITEMS ARE **NOT** ALLOWED IN THE CONCRETE SLAB UNLESS APPROVED IN WRITING BY THE STRUCTURAL ENGINEER:
    - A. NO SLOPES ARE ALLOWED IN THE CONCRETE SLAB UNLESS INDICATED ON THE STRUCTURAL CONTRACT DOCUMENTS
    - B. NO EMBEDDED CONDUIT OR OTHER ITEMS
    - C. CONTRACTOR TO ENSURE THAT PENETRATIONS ARE COORDINATED WITH THE MECHANICAL AND ELECTRICAL DRAWINGS
14. ANY PROPOSED CONSTRUCTION JOINTS IN THE CONCRETE SLAB OTHER THAN THOSE SHOWN ON THE STRUCTURAL DRAWINGS MUST BE LOCATED AS FOLLOWS:
    - A. IF PARALLEL TO FLOOR BEAMS, AT MID-POINT BETWEEN BEAMS
    - B. IF PARALLEL TO GIRDERS, AT MID-POINT BETWEEN GIRDERS

SPECIAL INSPECTION ITEMS

1. SPECIAL INSPECTION SHALL BE PROVIDED BY THE OWNER ACCORDING TO SECTION 1704 OF **IBC 2012**. THE APPROVED SPECIAL INSPECTOR SHALL DEMONSTRATE COMPETENCE FOR INSPECTION OF THE PARTICULAR TYPE OF CONSTRUCTION OR OPERATION REQUIRING SPECIAL INSPECTION. THE SPECIAL INSPECTOR SHALL SEND REPORTS TO THE OWNER, THE BUILDING OFFICIAL, THE ARCHITECT, THE STRUCTURAL ENGINEER OF RECORD, AND THE CONTRACTOR. THE SPECIAL INSPECTOR SHALL BRING NON-CONFORMING ITEMS TO THE IMMEDIATE ATTENTION OF THE CONTRACTOR AND NOTE ALL SUCH ITEMS IN THE REPORTS. ANY UNRESOLVED ITEM ABOUT TO BE COVERED BY THE WORK SHALL BE BROUGHT TO THE ATTENTION OF THE OWNER'S CONSTRUCTION MANGER AS WELL AS THE ARCHITECT AND STRUCTURAL ENGINEER OF RECORD. THE SPECIAL INSPECTOR SHALL SUBMIT A FINAL SIGNED REPORT STATING WHETHER OR NOT THE WORK REQUIRING SPECIAL INSPECTION WAS, TO THE BEST OF THE INSPECTOR'S KNOWLEDGE, IN CONFORMANCE WITH THE APPROVED PLANS AND SPECIFICATIONS. THE CONTRACTOR IS RESPONSIBLE FOR NOTIFYING THE SPECIAL INSPECTION AGENCY REGARDING INDIVIDUAL INSPECTIONS FOR ITEMS LISTED ON THE SCHEDULE AND AS NOTED ON THE BUILDING DEPARTMENT APPROVED PLANS. ADEQUATE NOTICE AND ACCESS TO APPROVED PLANS SHALL BE PROVIDED SO THAT THE SPECIAL INSPECTOR HAS TIME TO BECOME FAMILIAR WITH THE PROJECT.
2. THIS SECTION INCLUDES ADMINISTRATIVE AND PROCEDURAL REQUIREMENTS NECESSARY FOR COMPLIANCE WITH THE INTERNATIONAL BUILDING CODE, CHAPTER 17, STRUCTURAL TESTS AND SPECIAL INSPECTIONS.
3. THE OWNER WILL ENGAGE ONE OR MORE QUALIFIED SPECIAL INSPECTORS AND/OR TESTING AGENCIES TO CONDUCT STRUCTURAL TESTS AND SPECIAL INSPECTIONS SPECIFIED IN THE SPECIFICATION AND RELATED SECTIONS AND AS MAYBE SPECIFIED IN OTHER DIVISIONS OF THESE SPECIFICATIONS.
4. STRUCTURAL TESTING AND SPECIAL INSPECTION SERVICES ARE REQUIRED TO VERIFY COMPLIANCE WITH REQUIREMENTS SPECIFIED OR INDICATED. THESE SERVICES DO NOT RELIEVE CONTRACTOR OF RESPONSIBILITY FOR COMPLIANCE WITH OTHER CONSTRUCTION DOCUMENT REQUIREMENTS.
   - A. SPECIFIC QUALITY-ASSURANCE AND -CONTROL REQUIREMENTS FOR INDIVIDUAL CONSTRUCTION ACTIVITIES ARE SPECIFIED IN THE SECTIONS THAT SPECIFY THOSE ACTIVITIES. REQUIREMENTS IN THOSE SECTIONS MAY ALSO COVER PRODUCTION OF STANDARD PRODUCTS.
   - B. SPECIFIED TESTS, INSPECTIONS, AND RELATED ACTIONS DO NOT LIMIT CONTRACTOR'S OTHER QUALITY ASSURANCE AND -CONTROL PROCEDURES THAT FACILITATE COMPLIANCE WITH THE CONSTRUCTION DOCUMENT REQUIREMENTS.
   - C. REQUIREMENTS FOR CONTRACTOR TO PROVIDE QUALITY - ASSURANCE AND - CONTROL SERVICES REQUIRED BY ENGINEER, OWNER, OR AUTHORITIES HAVING JURISDICTION ARE NOT LIMITED BY PROVISIONS OF THIS SECTION.
5. EARTHWORK (PER SECTION 1705.6).
6. CONCRETE PLACEMENT (PER SECTION 1705.3)
7. MASONRY (PER SECTION 1705.4)
8. STRUCTURAL STEEL (PER SECTION 1705.2).
   - A. SHOP FABRICATION OF STEEL MEMBERS.
   - B. STEEL MATERIAL ID MARKINGS & CONFORMANCE TO ASTM STANDARDS.
   - C. ALL STRUCTURAL WELDING PER AWS D1.1, EXCEPT AS FOLLOWS:
     - I. THE SPECIAL INSPECTOR NEED NOT BE CONTINUOUSLY PRESENT DURING WELDING OF THE FOLLOWING ITEMS, PROVIDED THE MATERIALS, QUALIFICATIONS OF WELDING PROCEDURES AND WELDERS ARE VERIFIED PRIOR TO THE START OF WORK; PERIODIC INSPECTION ARE MADE OF THE WORK IN PROGRESS; AND A VISUAL INSPECTION OF ALL WELDS IS MADE PRIOR TO COMPLETION.
     - II. SINGLE PASS FILLET WELDS NOT EXCEEDING 5/16" SIZE.
     - III. FLOOR AND ROOF DECK WELDING.
     - IV. WELDED STUDS WHEN USED FOR STRUCTURAL DIAPHRAGM OR COMPOSITE SYSTEMS.
     - V. WELDED SHEET STEEL FOR COLD-FORMED FRAMING MEMBERS SUCH AS WALL STUDS AND JOISTS.
   - D. PERIODIC INSPECTION OF ALL HIGH STRENGTH BOLT INSTALLATIONS AND VERIFICATION THAT IDENTIFICATION MARKS FOR HIGH STRENGTH BOLT, NUTS AND WASHERS CONFORM TO APPLICABLE ASTM STANDARDS.
   - E. PERIODIC INSPECTION OF STEEL FRAME JOINT DETAILS FOR COMPLIANCE WITH APPROVED CONSTRUCTION DOCUMENTS.
   - F. METAL DECK DIAPHRAGM CONNECTIONS AND CONNECTIONS TO SUPPORTING STEEL FRAME MEMBERS.
9. ADDITIONALLY, COMPLIANCE IS REQUIRED WITH FIELD QUALITY CONTROL PROVISIONS OF THE FOLLOWING SPECIFICATION SECTIONS:
   - A. FOOTING BOTTOMS AND EARTHWORK: SECTION 31 2000.
   - B. CONCRETE: SECTION 03 3000.
   - C. MASONRY CONSTRUCTION: SECTION 04 2000.
   - D. STRUCTURAL STEEL: SECTION 05 1200.

CERTIFICATE OF AUTHORIZATION Bernhard TME, LLC No. 2790 ARKANSAS

7/7/2022 4:39:17 PM

\\jobfileserver2.tmecorp.com\2021\LIT\01-21-0122\3_Construction Docs\1_Dwgs\1_Working Set\01-21-0122 STRC RVT22.rvt

Revisions: Date:

CONSULTANTS

FIRE PROTECTION
FP&C CONSULTANTS KC, LLC
1330 BURLINGTON STREET, STE. 200
NORTH KANSAS CITY, MO 64116

SECURITY
GRW
801 CORPORATE DRIVE
LEXINGTON, KY 40503

CIVIL ENGINEER
HODGES ENGINEERING
231 SHORELINE DRIVE
MOUNTAIN HOME, AR 72653

STRUCTURAL ENGINEER
BERNHARD TME
BUILDING 2, 1 ALLIED DRIVE
SUITE 2600
LITTLE ROCK, AR 72202

ARCHITECT/ENGINEER OF RECORD

A/E
JohnsonDanforth & Associates
2200 N. RODNEY PARHAM ROAD
SUITE 210
LITTLE ROCK, AR 72212
501-404-4811
jda@JohnsonDanforth.com
JDA PROJECT #: 2018.001

STAMP
STATE OF ARKANSAS REGISTERED PROFESSIONAL ENGINEER No. 12944 DAVID KYLE BRIDGES 7/15/2022

Office of Construction and Facilities Management
VA U.S. Department of Veterans Affairs

Drawing Title: STRUCTURAL NOTES
Approved: Project Director

Phase: CONSTRUCTION DOCUMENTS
FULLY SPRINKLERED

Project Title: CONSTRUCT NEW WATER STORAGE FACILITY
Location: FAYETTEVILLE, AR
Issue Date: 2022.07.15 | Checked: KB | Drawn: AW

Project Number: 564-19-101
Building Number: .
Drawing Number: S002

VA FORM 08 - 6231

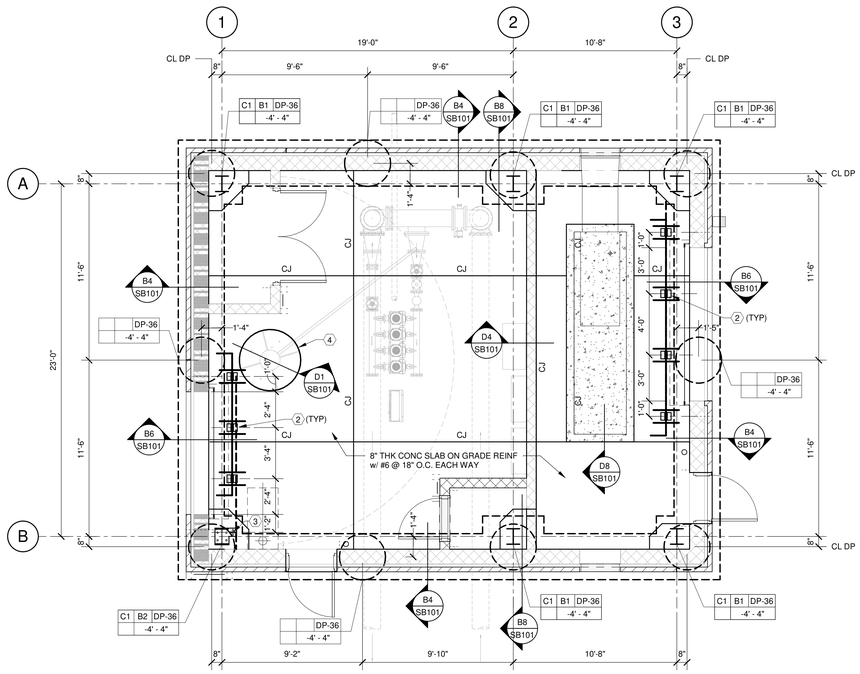

D2 FOUNDATION PLAN - PUMP HOUSE
1/4" = 1'-0"

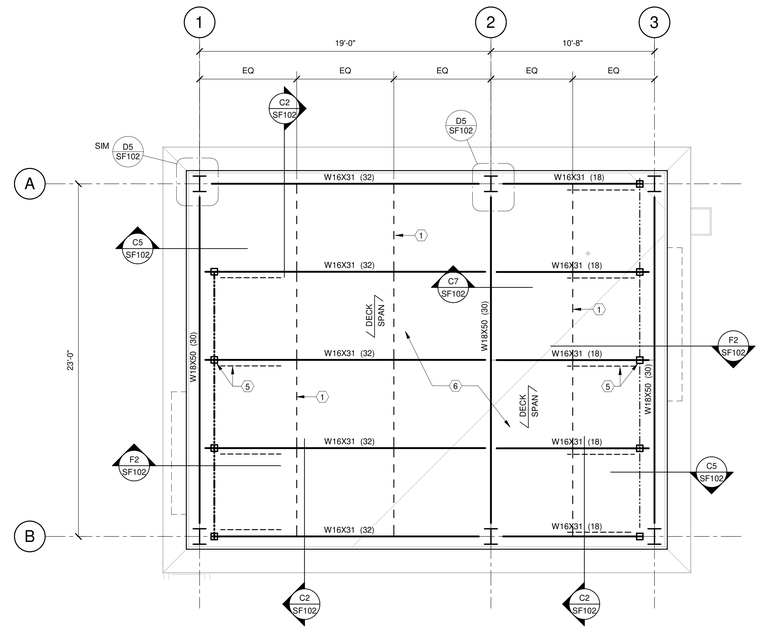

D7 ROOF FRAMING PLAN - PUMP HOUSE
1/4" = 1'-0"

SHEET NOTES:

1. SEE SHEETS S001 & S002 FOR STRUCTURAL NOTES
2. ALL BEAMS/JOIST EQUALLY SPACED BETWEEN GRIDS, U.N.O.

KEYED NOTES:

1. X-BRIDGING, SEE SECTION
2. BLAST CURTAIN FLOOR ANCHOR TETHER EMBED AS REQ'D BY BLAST CURTAIN SUPPLIER. CONTRACTOR TO VERY TETHER EMBED SPACING w/ BLAST CURTAIN SUPPLIER PRIOR TO FABRICATION OF REINF & POURING CONC. SEE SECTION FOR ANCHOR TETHER CONC REINF.
3. BLAST CURTAIN FLOOR ANCHOR TETHER @ COLUMN BASE PLATE SEE BASE PLATE DETAILS
4. JIB CRANE & FOUDNATION. NOTE BID ITEM 3, DEDUCT ALTERNATE #2 TO OMIT JIB CRANE AND FOUNDATION
5. BLAST CURTAIN MISC. STL. SEE SECTION
6. ROOF DECK: TOP OF SLAB ELEVATION (+)16'-7 1/2"
   6 1/2" THK CONC SLAB REINF w/ 6x6-W2.1xW2.1 WWF ON 2VLI x 20 GA GALV COMPOSITE DECK w/ THE FOLLOWING MIN PROPERTIES:
   I_p = 0.409 in^4/ft
   L_t = 0.406 in^4/ft
   S_p = 0.341 in^3/ft
   F_y = 50 ksi

   FASTENERS:
   LAYOUT = 36/4
   SUPPORT = 5/8" PUDDLE WELDS
   SIDELAP = 2- #10 TEKS
   EXTREME EDGE = 5/8" PUDDLE WELDS @ 12" O.C.

COLUMN SCHEDULE

MARK	COLUMN SIZE	NOTES
C1	W12x53	GRAVITY COLUMN. SEE SHEET SB101 FOR BASE PLATES & ANCHOR BOLTS

CERTIFICATE OF AUTHORIZATION
Bernhard TME, LLC
No. 2790
ARKANSAS

SCALE: 1/4" = 1'-0"

Revisions: Date:

CONSULTANTS

FP&C CONSULTANTS
FIRE PROTECTION
FP&C CONSULTANTS KC, LLC
1330 BURLINGTON STREET, STE. 200
NORTH KANSAS CITY, MO 64116

GRW engineering | architecture | geospatial
SECURITY
GRW
801 CORPORATE DRIVE
LEXINGTON, KY 40503

Hodges Engineering
CIVIL ENGINEER
HODGES ENGINEERING
231 SHORELINE DRIVE
MOUNTAIN HOME, AR 72653

Bernhard TME Engineering
STRUCTURAL ENGINEER
BERNHARD TME
BUILDING 2, 1 ALLIED DRIVE
SUITE 2600
LITTLE ROCK, AR 72202

ARCHITECT/ENGINEER OF RECORD
A/E
JohnsonDanforth & Associates
2200 N. RODNEY PARHAM ROAD
SUITE 210
LITTLE ROCK, AR 72212
501-404-4811
jda@JohnsonDanforth.com
JDA PROJECT #: 2018.001

STAMP
STATE OF ARKANSAS REGISTERED PROFESSIONAL ENGINEER No. 12944 DAVID KYLE BRANDON
7/15/2022

Office of Construction and Facilities Management
VA U.S. Department of Veterans Affairs

Drawing Title: PUMP HOUSE FOUNDATION & FRAMING LAYOUT
Approved: Project Director
Phase: CONSTRUCTION DOCUMENTS
FULLY SPRINKLERED
Project Title: CONSTRUCT NEW WATER STORAGE FACILITY
Location: FAYETTEVILLE, AR
Issue Date: 2022.07.15
Checked: KB
Drawn: AW
Project Number: 564-19-101
Building Number: .
Drawing Number: S100

VA FORM 08 - 6231

\\cdfileserver2.tmocorp.com\2021\LIT\01-21-01223_Construction Docs\1_Dwgs\1_Working Set\01-21-0122 STRC 7/7/2022 4:39:18 PM

NOTES:
1. CONTRACTOR MAY USE EITHER KEYED COLD JOINTS OR SAWN JOINTS WHERE CJ IS NOTED ON PLAN
2. D_F DEPTH OF SLAB
3. CUT REINF 3" EA SIDE OF JOINT

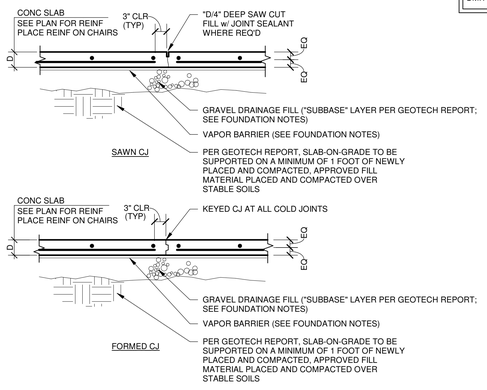

B1 SLAB CONST DETAIL
3/4" = 1'-0"

NOTE:
BID ITEM 2, DEDUCT ALTERNATE #1: OMIT FACE BRICK

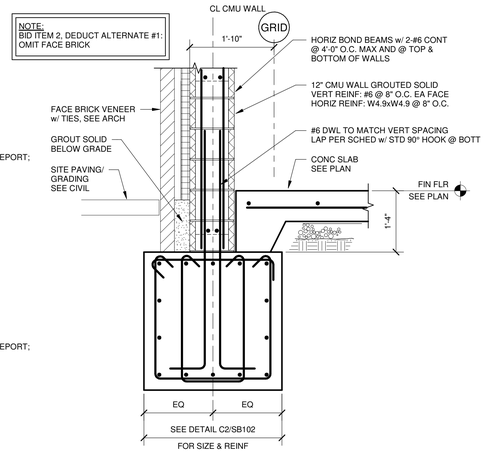

B4 SECTION AT EXTERIOR
3/4" = 1'-0"

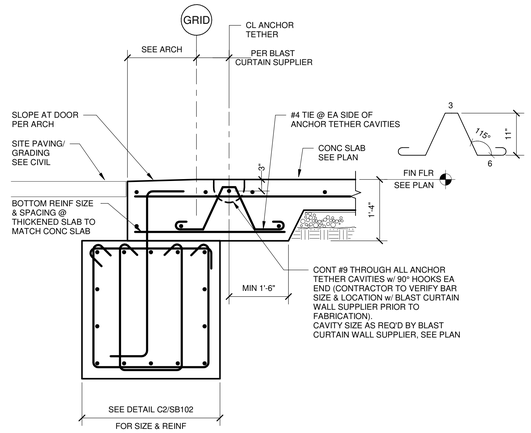

B6 SECTION AT ENTRY
3/4" = 1'-0"

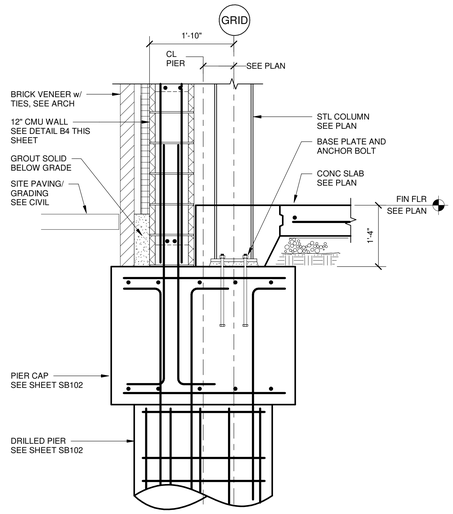

B8 SECTION AT EXTERIOR COLUMN
3/4" = 1'-0"

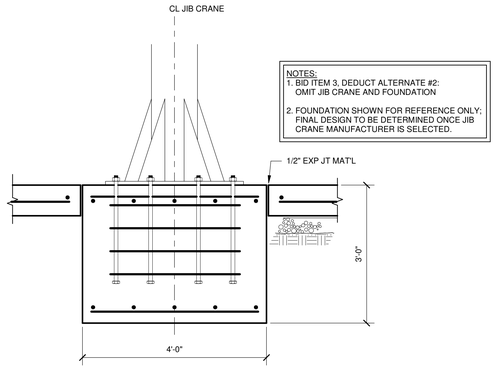

NOTES:
1. BID ITEM 3, DEDUCT ALTERNATE #2: OMIT JIB CRANE AND FOUNDATION
2. FOUNDATION SHOWN FOR REFERENCE ONLY; FINAL DESIGN TO BE DETERMINED ONCE JIB CRANE MANUFACTURER IS SELECTED.

D1 SECTION AT JIB CRANE
3/4" = 1'-0"

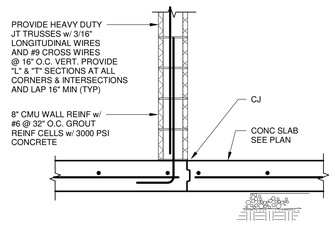

D4 SECTION AT INTERIOR CMU WALL
3/4" = 1'-0"

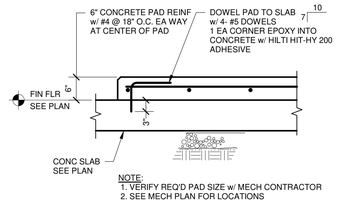

NOTE:
1. VERIFY REQ'D PAD SIZE w/ MECH CONTRACTOR
2. SEE MECH PLAN FOR LOCATIONS

D6 TYPICAL HOUSEKEEPING PAD
3/4" = 1'-0"

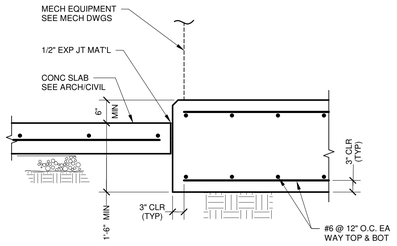

NOTE:
VERIFY REQ'D PAD SIZE w/ MECH CONTRACTOR

D8 SECTION AT MECH EQUIPMENT PAD
3/4" = 1'-0"

ANCHOR BOLT SCHEDULE		
DIA	EMBEDMENT	NSG
3/4"	1'-3"	1 1/2"

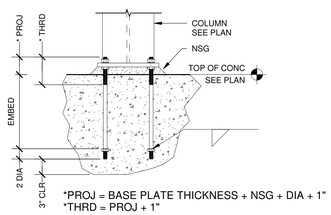

NOTES:
1. ANCHOR BOLTS SHALL MEET THE REQUIREMENTS OF ASTM F1554 GR55.
2. ALL ANCHOR BOLTS SHALL BE FURNISHED WITH HEX NUTS AND CUT WASHERS OF SPECIFICATIONS COMPATIBLE WITH THOSE OF THE THREADED SHANKS UNLESS NOTED OTHERWISE.
3. FOR CONVENTIONAL COLUMNS (W & HSS SHAPES) A NUT SHALL BE PLACED UNDER THE BASE PLATE AND USED FOR LEVELING.
4. HEADED BOLTS MAY BE SUBSTITUTED FOR BOLTS AS SHOWN.

F1 TYPICAL ANCHOR BOLT DETAIL
1" = 1'-0"

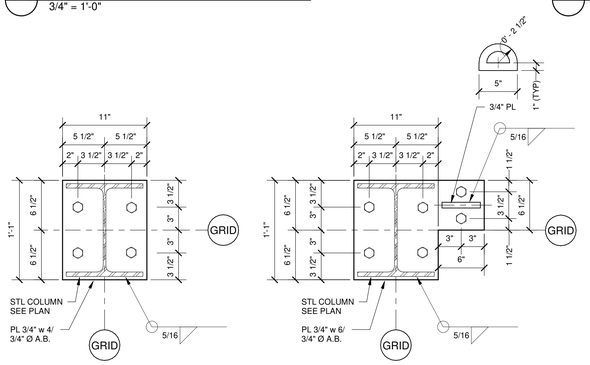

BASE PLATE "B1"

BASE PLATE "B2"

F4 BASE PLATES
1 1/2" = 1'-0"

SCALE: 1 1/2" = 1'-0" (0, 0'-4", 0'-8", 1'-4")
SCALE: 1" = 1'-0" (0, 0'-6", 1'-0", 2'-0")
SCALE: 3/4" = 1'-0" (0, 0'-8", 1'-4", 2'-8")

CERTIFICATE OF AUTHORIZATION
Bernhard TME, LLC
No. 2790
ARKANSAS

Revisions: Date:

CONSULTANTS

FIRE PROTECTION
FP&C CONSULTANTS KC, LLC
1330 BURLINGTON STREET, STE. 200
NORTH KANSAS CITY, MO 64116

SECURITY
GRW
801 CORPORATE DRIVE
LEXINGTON, KY 40503

CIVIL ENGINEER
HODGES ENGINEERING
231 SHORELINE DRIVE
MOUNTAIN HOME, AR 72653

STRUCTURAL ENGINEER
BERNHARD TME
BUILDING 2, 1 ALLIED DRIVE
SUITE 2600
LITTLE ROCK, AR 72202

ARCHITECT/ENGINEER OF RECORD
A/E
JohnsonDanforth & Associates
2200 N. RODNEY PARHAM ROAD
SUITE 210
LITTLE ROCK, AR 72212
501-404-4811
jda@JohnsonDanforth.com
JDA PROJECT #: 2018.001

STAMP
ARKANSAS
REGISTERED PROFESSIONAL ENGINEER
No. 12944
7/15/2022

Office of Construction and Facilities Management
VA U.S. Department of Veterans Affairs

Drawing Title: FOUNDATION SECTIONS
Approved: Project Director
Phase: CONSTRUCTION DOCUMENTS
FULLY SPRINKLERED
Project Title: CONSTRUCT NEW WATER STORAGE FACILITY
Location: FAYETTEVILLE, AR
Issue Date: 2022.07.15
Checked: KB
Drawn: AW
Project Number: 564-19-101
Building Number: .
Drawing Number: SB101

VA FORM 08 - 6231

7/7/2022 4:39:20 PM
\\jobfileserver2.imecorp.com\2020\LIT01-21-01223_Construction Docs\1_Dwgs\1_Working Set\01-21-01223 STRC SB22.rvt

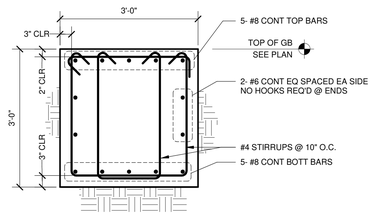

NOTES:
1. TOP & BOTT CONT BARS SHALL HAVE STD 90° HOOKS @ EXTERIOR SUPPORTS UNLESS NOTED OR DETAILED OTHERWISE
2. LAP SPLICE TOP BARS @ MIDPOINT BETWEEN SUPPORTS AS REQUIRED. LAP SPLICE BOT BARS @ SUPPORTS AS REQUIRED.
3. 1ST STIRRUP TO BE SPACED 2" FROM FACE OF SUPPORTS (TYP)

C2 TYPICAL SECTION THRU GRADE BEAM
3/4" = 1'-0"

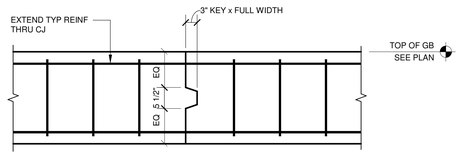

NOTES:
1. PLACE CONSTRUCTION JOINT IN GRADE BEAM ONLY IN MIDDLE THIRD OF SPAN
2. SEE TYPICAL SECTION THRU GRADE BEAM FOR SIZE & REINF

C4 TYPICAL GRADE BEAM CJ DETAIL
3/4" = 1'-0"

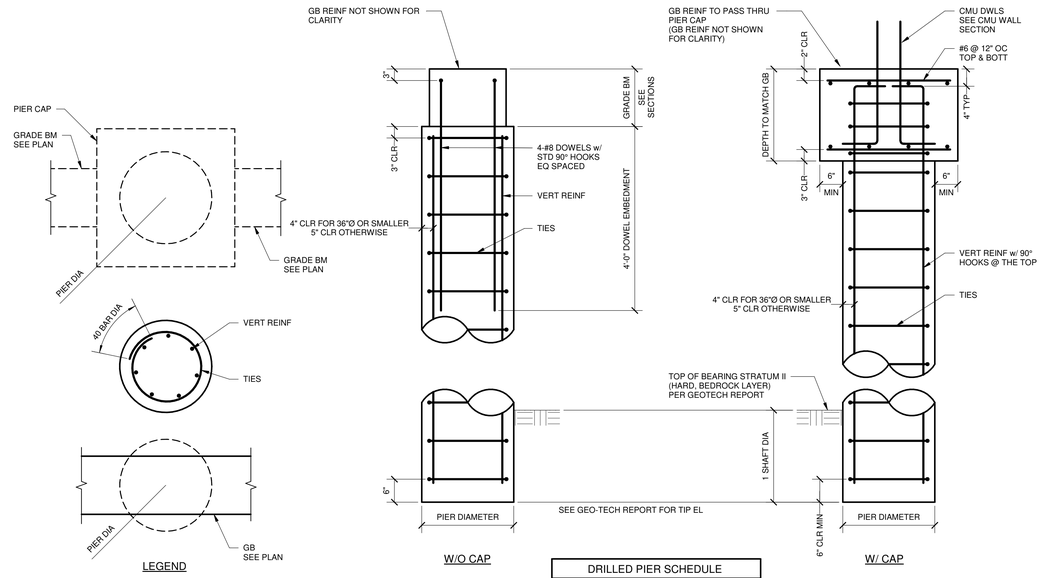

DRILLED PIER SCHEDULE			
MARK	SHAFT SIZE	VERT REINF	TIES
DP-36	36" DIA	8- #8	#3 @ 16" O.C.

NOTE:
DRILLED PIER ALLOWABLE BEARING PRESSURE 20 KSF. BEARING PRESSURE AND PIER LENGTH (EST. 10 TO 16) SHALL BE VERIFIED BY GEOTECHNICAL CONSULTANT DURING PIER DRILLING OPERATION.

C6 TYPICAL STRAIGHT SHAFT DRILLED PIER DETAIL
3/4" = 1'-0"

Bernhard TME, LLC No. 2790 ARKANSAS CERTIFICATE OF AUTHORIZATION

0 0'-8" 1'-4" 2'-8"
SCALE: 3/4" = 1'-0"

CONSULTANTS

FP&C CONSULTANTS
FIRE PROTECTION
FP&C CONSULTANTS KC, LLC
1330 BURLINGTON STREET, STE. 200
NORTH KANSAS CITY, MO 64116

GRW engineering | architecture | geospatial
SECURITY
GRW
801 CORPORATE DRIVE
LEXINGTON, KY 40503

Hodges Engineering
CIVIL ENGINEER
HODGES ENGINEERING
231 SHORELINE DRIVE
MOUNTAIN HOME, AR 72653

Bernhard TME Engineering
STRUCTURAL ENGINEER
BERNHARD TME
BUILDING 2, 1 ALLIED DRIVE
SUITE 2600
LITTLE ROCK, AR 72202

ARCHITECT/ENGINEER OF RECORD
A/E
JohnsonDanforth & Associates
2200 N. RODNEY PARHAM ROAD
SUITE 210
LITTLE ROCK, AR 72212
501-404-4811
jda@JohnsonDanforth.com
JDA PROJECT #: 2018.001

STAMP
ARKANSAS REGISTERED PROFESSIONAL ENGINEER No. 12944 DAVID KYLE BRADLEY
7/15/2022

Office of Construction and Facilities Management
VA U.S. Department of Veterans Affairs

Drawing Title: **FOUNDATION SECTIONS**
Approved: Project Director
Phase: **CONSTRUCTION DOCUMENTS**
FULLY SPRINKLERED
Project Title: **CONSTRUCT NEW WATER STORAGE FACILITY**
Location: **FAYETTEVILLE, AR**
Issue Date: 2022.07.15
Checked: Checker
Drawn: Author
Project Number: **564-19-101**
Building Number: .
Drawing Number: **SB102**

Revisions: Date:

VA FORM 08 - 6231

7/7/2022 4:39:21 PM
\\jdofileserver2.lmscorp.com\2021\LTT01-21-01\23-3_Construction Docs\1_Dwgs\1 - Working Set\01-21-0122 STRC SB102.rvt

NOTES:
1. LINTEL DETAILS APPLY UNLESS NOTED OR DETAILED OTHERWISE.
2. 8" MIN BEARING EACH END UNLESS NOTED OTHERWISE.
3. SEE ARCH FOR LOCATION AND SIZE OF ALL OPENINGS IN MASONRY.
4. LINTEL DETAILS ARE BASED ON THE REQUIREMENT THAT ALL VERTICAL CONTROL JOINTS IN MASONRY OCCUR AT LEAST 8" BEYOND END OF OPENING (UNLESS NOTED OR DETAILED OTHERWISE) IF THIS REQUIREMENT CANNOT BE MET. THEN THE GENERAL CONTRACTOR MUST CONTACT THE STRUCTURAL ENGINEER IN WRITING FOR FURTHER INSTRUCTIONS.
5. PROVIDE 1 #6 VERT REINF FULL WALL HEIGHT SOLID GROUTED MASONRY JAMB UNDER LINTEL EACH SIDE OF OPENING.
6. THESE ARE TYPICAL BLOCK LINTEL DETAILS TO BE USED UNLESS NOTED OR DETAILED OTHERWISE IN SECTIONS.

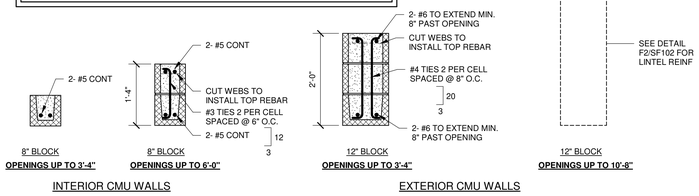

B1 TYPICAL BLOCK LINTEL DETAILS
3/4" = 1'-0"

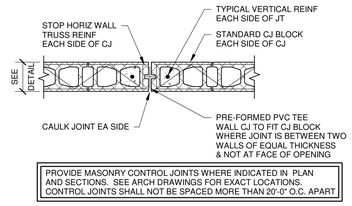

B4 TYPICAL MASONRY WALL CJ
3/4" = 1'-0"

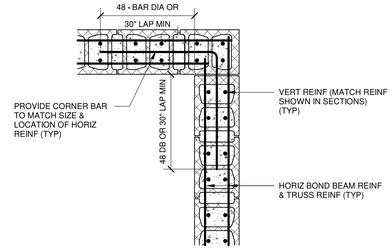

B6 TYPICAL CORNER MASONRY WALL REINF DETAIL
3/4" = 1'-0"

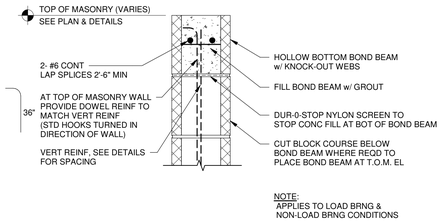

B9 TYPICAL BOND BEAM DETAIL
1 1/2" = 1'-0"

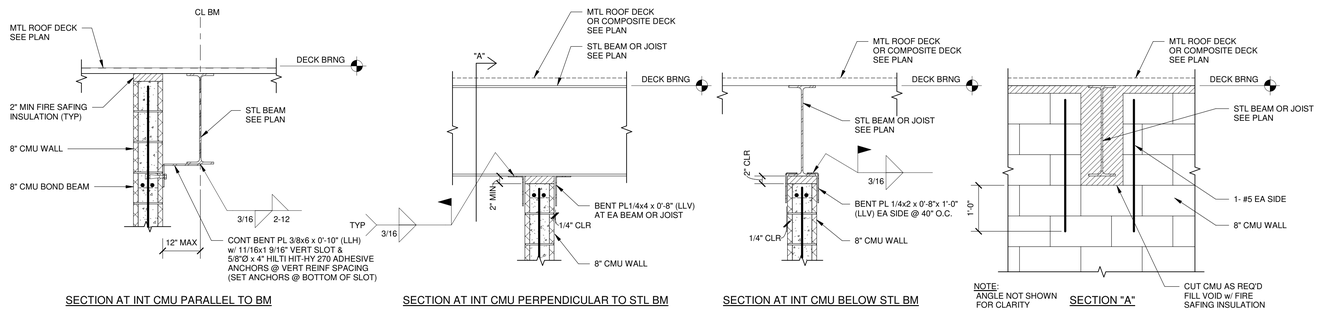

D1 SECTIONS AT CMU WALL TO STRUCTURE
3/4" = 1'-0"

CERTIFICATE OF AUTHORIZATION
Bernhard TME, LLC
No. 2790
ARKANSAS

0 0'-4" 0'-8" 1'-4"
SCALE: 1 1/2" = 1'-0"

0 0'-8" 1'-4" 2'-8"
SCALE: 3/4" = 1'-0"

Revisions: Date:

CONSULTANTS

FP&C CONSULTANTS
FIRE PROTECTION
FP&C CONSULTANTS KC, LLC
1330 BURLINGTON STREET, STE. 200
NORTH KANSAS CITY, MO 64116

GRW engineering | architecture | geospatial
SECURITY
GRW
801 CORPORATE DRIVE
LEXINGTON, KY 40503

Hodges Engineering
CIVIL ENGINEER
HODGES ENGINEERING
231 SHORELINE DRIVE
MOUNTAIN HOME, AR 72653

Bernhard TME Engineering
STRUCTURAL ENGINEER
BERNHARD TME
BUILDING 2, 1 ALLIED DRIVE
SUITE 2600
LITTLE ROCK, AR 72202

ARCHITECT/ENGINEER OF RECORD
A/E
JohnsonDanforth & Associates
2200 N. RODNEY PARHAM ROAD
SUITE 210
LITTLE ROCK, AR 72212
501-404-4811
jda@JohnsonDanforth.com
JDA PROJECT #: 2018.001

STAMP
ARKANSAS REGISTERED PROFESSIONAL ENGINEER
DAVID KYLE BRIDGES
No. 12944
7/15/2022

Office of Construction and Facilities Management
VA U.S. Department of Veterans Affairs

Drawing Title
FRAMING SECTIONS

Approved: Project Director

Phase
CONSTRUCTION DOCUMENTS

FULLY SPRINKLERED

Project Title
CONSTRUCT NEW WATER STORAGE FACILITY

Location
FAYETTEVILLE, AR

Issue Date: 2022.07.15
Checked: KB
Drawn: AW

Project Number: **564-19-101**
Building Number: .
Drawing Number: **SF101**

VA FORM 08 - 6231

7/7/2022 4:39:23 PM
\\jdofilesserver2.tmscorp.com\2021\LIT\01-21-01223_Construction Docs\1_Dwgs\1_Working Set\01-21-0122 STRC F22.rvt

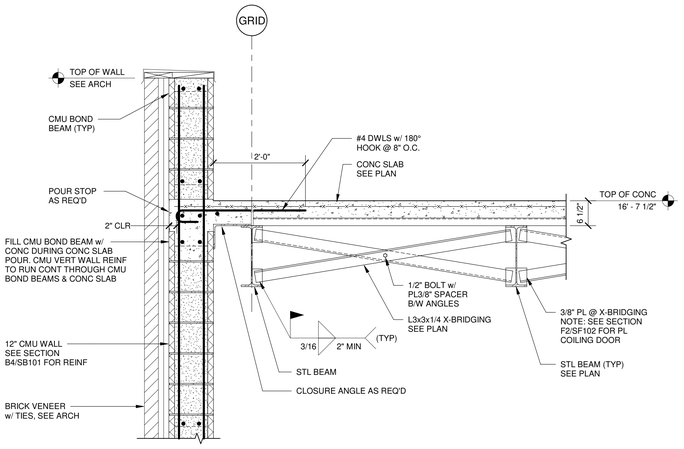

C2 SECTION AT EXTERIOR
3/4" = 1'-0"

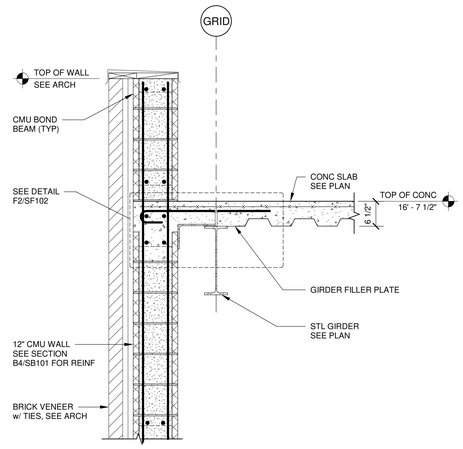

C5 SECTION AT EXTERIOR
3/4" = 1'-0"

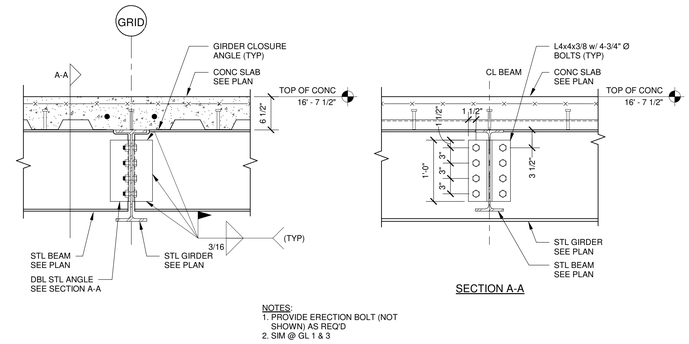

SECTION A-A

NOTES:
1. PROVIDE ERECTION BOLT (NOT SHOWN) AS REQ'D
2. SIM @ GL 1 & 3

C7 TYPICAL SECTION AT STEEL BEAM CONN
1" = 1'-0"

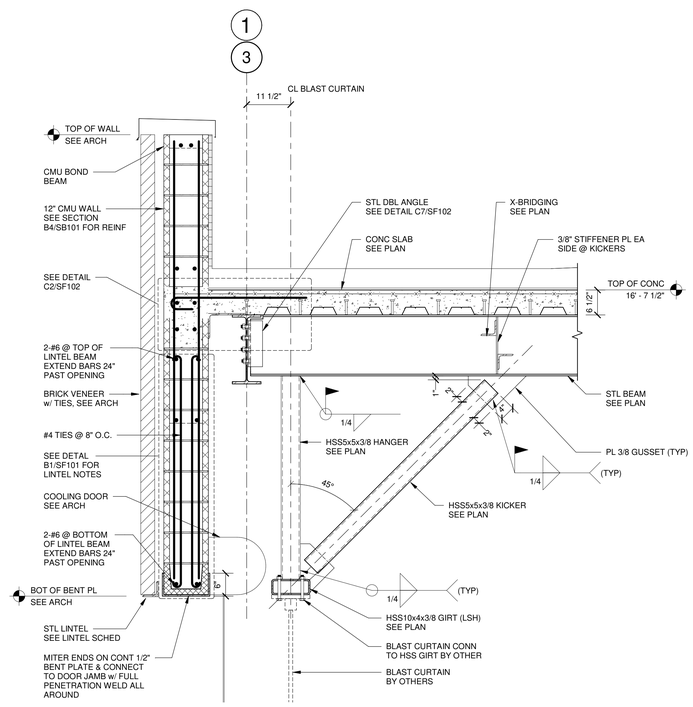

F2 SECTION AT COILING DOOR
3/4" = 1'-0"

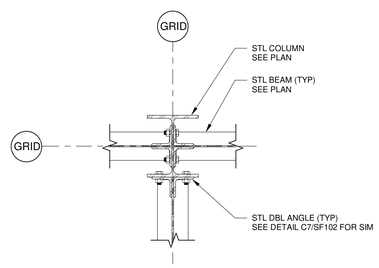

D5 TYPICAL BEAM TO COLUMN CONN
1" = 1'-0"

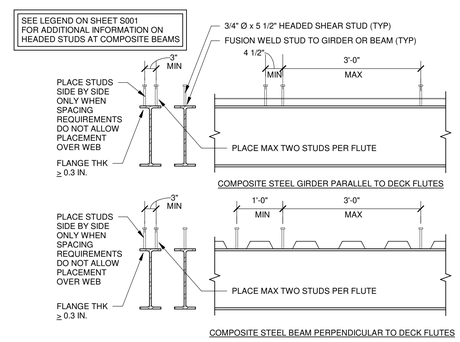

D7 TYPICAL SHEAR STUD SPACING DETAIL
3/4" = 1'-0"

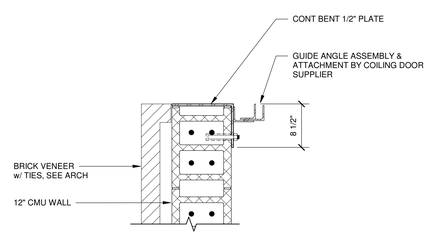

F5 SECTION AT COILING DOOR JAMB
1" = 1'-0"

CERTIFICATE OF AUTHORIZATION
Bernhard TME, LLC
No. 2790
ARKANSAS

0 0'-6" 1'-0" 2'-0"
SCALE: 1" = 1'-0"

0 0'-8" 1'-4" 2'-8"
SCALE: 3/4" = 1'-0"

Revisions: Date:

CONSULTANTS

FIRE PROTECTION
FP&C CONSULTANTS KC, LLC
1330 BURLINGTON STREET, STE. 200
NORTH KANSAS CITY, MO 64116

SECURITY
GRW
801 CORPORATE DRIVE
LEXINGTON, KY 40503

CIVIL ENGINEER
HODGES ENGINEERING
231 SHORELINE DRIVE
MOUNTAIN HOME, AR 72653

STRUCTURAL ENGINEER
BERNHARD TME
BUILDING 2, 1 ALLIED DRIVE
SUITE 2600
LITTLE ROCK, AR 72202

ARCHITECT/ENGINEER OF RECORD
A/E
JohnsonDanforth & Associates
2200 N. RODNEY PARHAM ROAD
SUITE 210
LITTLE ROCK, AR 72212
501-404-4811
jda@JohnsonDanforth.com
JDA PROJECT #: 2018.001

STAMP
ARKANSAS
REGISTERED
PROFESSIONAL
ENGINEER
No. 12944
7/15/2022

Office of Construction and Facilities Management
VA U.S. Department of Veterans Affairs

Drawing Title: FRAMING SECTIONS
Approved: Project Director
Phase: CONSTRUCTION DOCUMENTS
FULLY SPRINKLERED
Project Title: CONSTRUCT NEW WATER STORAGE FACILITY
Location: FAYETTEVILLE, AR
Issue Date: 2022.07.15
Checked: KB
Drawn: AW
Project Number: 564-19-101
Building Number: .
Drawing Number: SF102

VA FORM 08 - 6231

7/7/2022 4:09:25 PM
\\jdafileserver2.bmecorp.com\2021\LIT\01-21-0122\3_Construction Docs\1_Dwgs\1_Working Set\01-21-0122 STRC

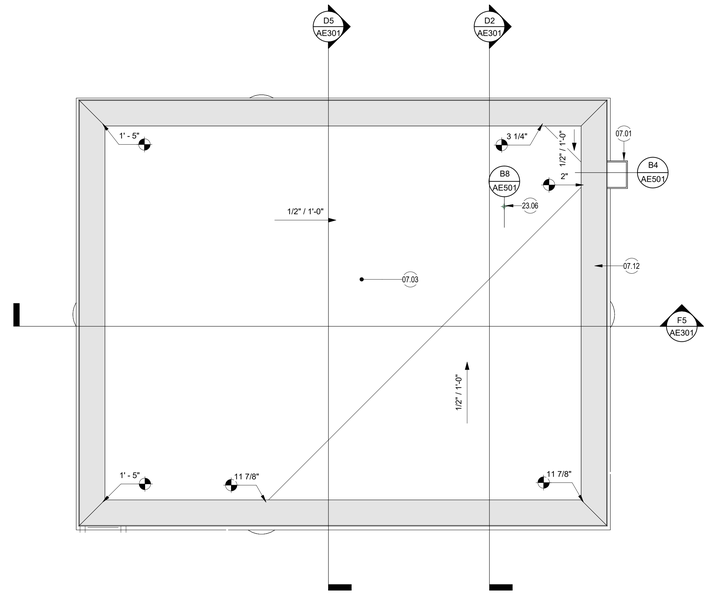

C6 **ROOF PLAN**
1/4" = 1'-0"

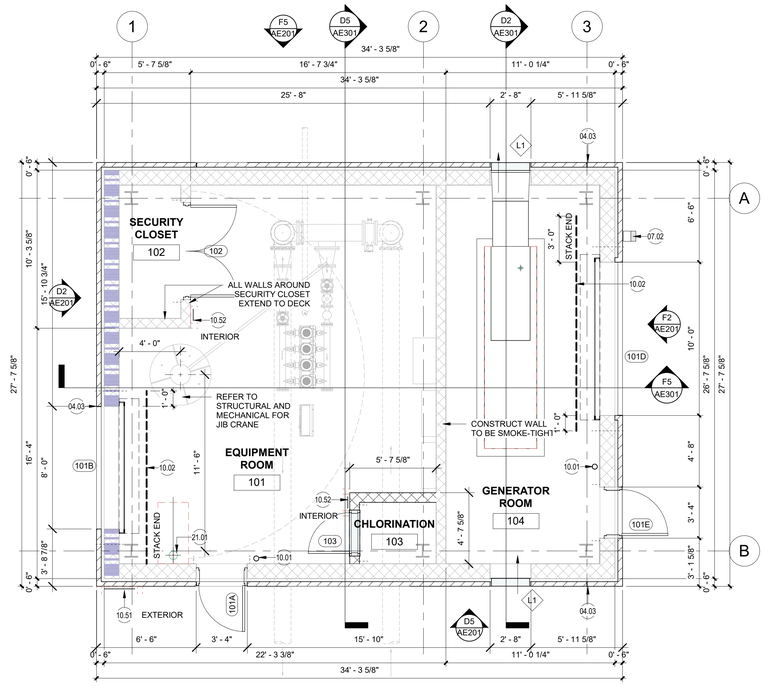

F6 **PUMP HOUSE FLOOR PLAN**
1/4" = 1'-0"

0 2' 4' 8'
SCALE: 1/4" = 1'-0"

GENERAL NOTES

1. CONTRACTOR RESPONSIBLE FOR COORDINATING ANY DISRUPTIONS IN UTILITY SERVICES OR BUILDING SYSTEMS WITH VA POINT OF CONTACT/CONTRACTING OFFICER (REPRESENTATIVE) PRIOR TO EXECUTION.
2. CONTRACTOR FULLY RESPONSIBLE FOR VERIFYING EXISTING CONDITIONS OF THE AREAS OF WORK. PRIOR TO BIDDING.
3. CONTRACTOR FULLY RESPONSIBLE FOR PROVIDING THE DESIGN INTENT AND SYSTEMS PERFORMANCE CRITERIA IN IT'S ENTIRITY AS OUTLINED IN THE SPECIFICATIONS AND CONSTRUCTION DRAWINGS.
4. CONTRACTOR SHALL IMMEDIATELY NOTIFY THE VA POINT OF CONTACT/CONTRACTING OFFICER (REPRESENTATIVE) AND ARCHITECT IF THERE ARE ANY DISCREPANCIES BETWEEN THE EXISTING CONDITIONS AND THE CONTRACT DOCUMENTS (SPECIFICATIONS AND CONSTRUCTION DRAWINGS).
5. IN THE EVENT OF A CONFLICT BETWEEN THE SPECIFICATIONS AND CONSTRUCTION DRAWINGS, THE CONTRACTOR SHALL IMMEDIATELY NOTIFY THE VA POINT OF CONTACT/CONTRACTING OFFICER (REPRESENTATIVE) AND ARCHITECT VIA RFI PROCESS.
6. IN THE EVENT OF A CONFLICT BETWEEN THE SPECIFICATIONS AND CONSTRUCTION DRAWINGS – DURING THE BIDDING PROCESS – THE CONTRACTOR SHALL BID THE MORE EXPENSIVE OPTION; IN THE EVENT OF THE CONTRACTOR BIDDING THE LEAST EXPENSIVE OPTION, AND THE DESIGN REQUIRING THE MORE EXPENSIVE OPTION – THE CONTRACTOR SHALL BE RESPONSIBLE FOR PROVIDING THE MORE EXPENSIVE OPTION AT NO ADDITIONAL EXPENSE TO THE VA.
7. CONTRACTOR SHALL DEVELOP AN INFECTION CONTROL PLAN AND SAFETY PLAN AND SUBMIT TO THE VA POINT OF CONTACT/CONTRACTING OFFICER (REPRESENTATIVE) FOR REVIEW AND APPROVAL PRIOR TO THE BEGINNING OF THEIR WORK. BOTH PLANS MUST INCLUDE MEANS AND METHODS OF DEBRIS STAGING AND REMOVAL.
8. CONTRACTOR SHALL IMMEDIATELY NOTIFY THE VA POINT OF CONTACT/CONTRACTING OFFICER (REPRESENTATIVE) AND ARCHITECT IF THEY ENCOUNTER ANY UNDOCUMENTED HAZARDOUS MATERIALS DURING DEMO AND/OR NEW CONSTRUCTION.
9. CONTRACTOR RESPONSIBLE FOR IMMEDIATELY NOTIFYING VA POINT OF CONTACT/CONTRACTING OFFICER (REPRESENTATIVE) AND ARCHITECT UPON COMPLETION OF CUTTING AND SELECTIVE DEMOLITION WORK AND REPORT ANY "UNFORESEEN CONDITIONS" THAT CREATE CONFLICTS WITH THE NEW CONSTRUCTION DRAWINGS.
10. ADJACENT FACILITIES WILL BE OCCUPIED / IN USE DURING CONSTRUCTION. CONTRACTOR WILL TAKE NECESSARY MEASURES TO ENSURE THE HEALTH, SAFETY, AND WELFARE OF VA PERSONNEL.
11. CONTRACTOR TO PROTECT EXISTING STRUCTURES TO REMAIN DURING DEMO AND NEW CONSTRUCTION PHASES.
12. ALL EXTERIOR WALL AND PARTITION CONSTRUCTION CRITERIA AND DETAILS ARE INDICATED ON STRUCTURAL DRAWINGS.

SHEET NOTES

04.03 BRICK CONTROL JOINT: REF. F2/AE501
07.01 SHEET METAL ROOF COLLECTION BOX
07.02 SHEET METAL DOWNSPOUT & SUPPORTS
07.03 ROOF TYPE TPO. REF: SHEET AE501
07.12 SHEET METAL PARAPET CAP FLASHING
10.01 FIRE EXTINGUISHER ON BRACKET (VV)
10.02 SUSPENDED BLAST CURTAIN
10.51 EXTERIOR SIGN (TYPE)
10.52 INTERIOR SIGN (TYPE)
21.01 SPRINKLER RISER
23.06 GENERATOR EXHAUST FLUE

PARTITION LEGEND

NEW UNRATED PARTITION

NEW 1 HOUR CMU BARRIER UL U906

Revisions: **Date:**

CONSULTANTS

FIRE PROTECTION
FP&C CONSULTANTS KC, LLC
1330 BURLINGTON STREET, STE. 200
NORTH KANSAS CITY, MO 64116

SECURITY
GRW
801 CORPORATE DRIVE
LEXINGTON, KY 40503

CIVIL ENGINEER
HODGES ENGINEERING
231 SHORELINE DRIVE
MOUNTAIN HOME, AR 72653

STRUCTURAL ENGINEER
BERNHARD TME
BUILDING 2, 1 ALLIED DRIVE
SUITE 260
LITTLE ROCK, AR 72202

ARCHITECT/ENGINEER OF RECORD

A/E
JohnsonDanforth & Associates
2200 N. RODNEY PARHAM ROAD
SUITE 210
LITTLE ROCK, AR 72212

501-404-4811
jda@JohnsonDanforth.com

JDA PROJECT #: 2018.001

STAMP
STATE OF ALABAMA
DANIEL E. BUSH
NO. 6658
REGISTERED ARCHITECT
Digitally signed by Daniel E. Bush
Date: 2022.07.14 13:51:23-04'00'

Office of Construction and Facilities Management

VA U.S. Department of Veterans Affairs

Drawing Title
PUMP HOUSE FLOOR PLAN

Approved: Project Director

Phase
CONSTRUCTION DOCUMENTS

FULLY SPRINKLERED

Project Title
CONSTRUCT NEW WATER STORAGE FACILITY

Project Number
564-19-101

Building Number
39

Location
FAYETTEVILLE, AR

Issue Date 2022.07.15
Checked BUSH
Drawn DEB

Drawing Number
AE101

E:\Revit_ARCHITECTURE_BIM_ASSETS_PROJECTS\JDA\Id21.002 564-19-101 Fayetteville Water Storage\BIM\564-19-101_Fayetteville Water Storage_Acts r22.rvt
7/14/2022 3:33:05 PM

VA FORM 08 - 6231

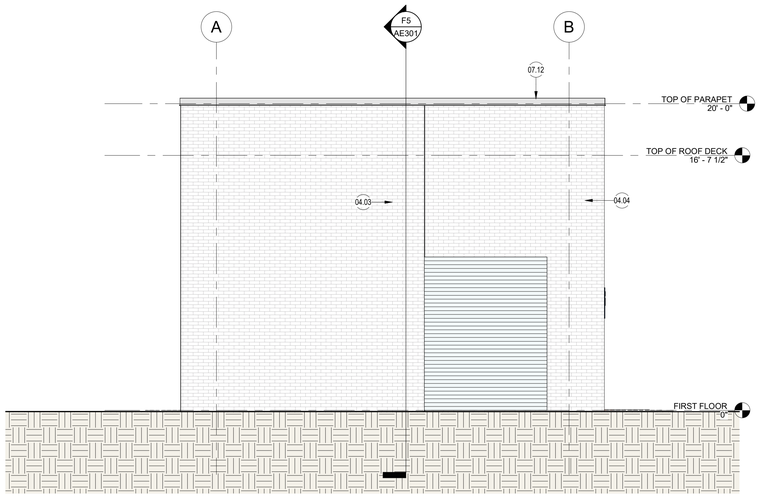

D2 **WEST ELEVATION**
1/4" = 1'-0"

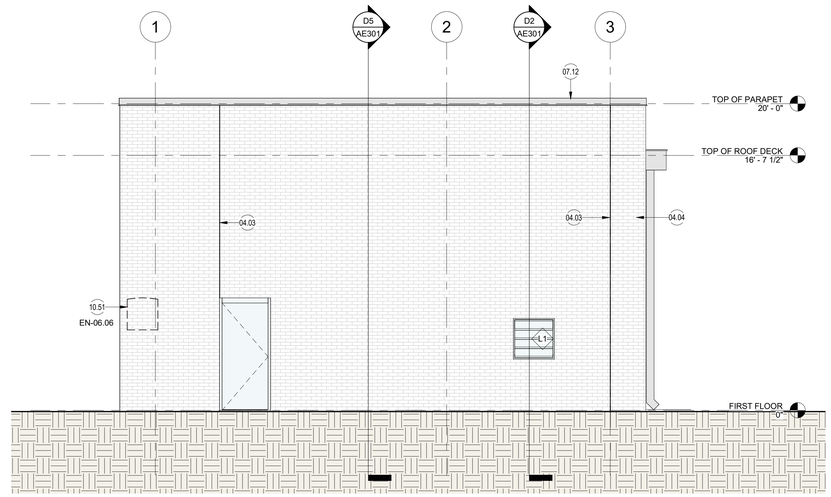

D5 **SOUTH ELEVATION**
1/4" = 1'-0"

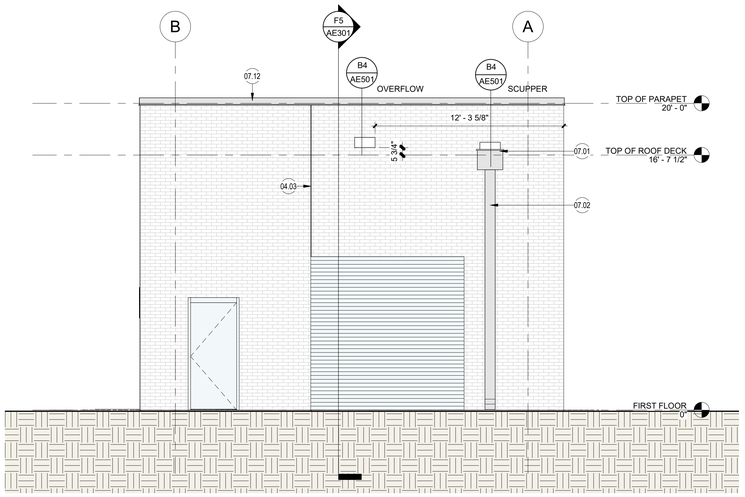

F2 **EAST ELEVATION**
1/4" = 1'-0"

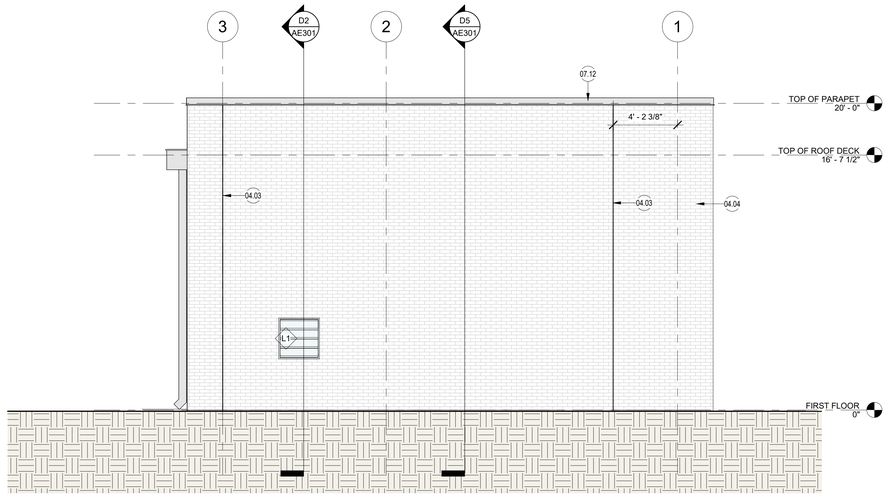

F5 **NORTH ELEVATION**
1/4" = 1'-0"

0 2' 4' 8'
SCALE: 1/4" = 1'-0"

GENERAL NOTES

1. REFER TO GENERAL NOTES ON SHEET AE101 WHICH APPLY TO ENTIRE PROJECT.
2. FACE BRICK IS TO MATCH EXISTING CAMPUS STANDARD. SUBMIT SAMPLE BOARD OF BRICK AND MORTAR TO COR AND OBTAIN WRITTEN APPROVAL BY COR BEFORE BID OPENING.
3. IF DEDUCT ALTERNATE #1 (OMIT FACE BRICK) IS TAKEN, PAINT ALL CMU PER SECTION 09 91 00.
4. PAINT ALL EXTERIOR OPENINGS TO MATCH FACE BRICK (OR COLOR APPROVED BY COR IF DEDUCT #1 IS TAKEN).

SHEET NOTES

04.03	BRICK CONTROL JOINT: REF. F2/AE501
04.04	WALL TYPE E12. REF: SHEET AE501
07.01	SHEET METAL ROOF COLLECTION BOX
07.02	SHEET METAL DOWNSPOUT & SUPPORTS
07.12	SHEET METAL PARAPET CAP FLASHING
10.51	EXTERIOR SIGN (TYPE)

Revisions: **Date:**

VA FORM 08 - 6231

CONSULTANTS

FIRE PROTECTION
FP&C CONSULTANTS KC, LLC
1330 BURLINGTON STREET, STE. 200
NORTH KANSAS CITY, MO 64116

SECURITY
GRW
801 CORPORATE DRIVE
LEXINGTON, KY 40503

CIVIL ENGINEER
HODGES ENGINEERING
231 SHORELINE DRIVE
MOUNTAIN HOME, AR 72653

STRUCTURAL ENGINEER
BERNHARD TME
BUILDING 2, 1 ALLIED DRIVE
SUITE 260
LITTLE ROCK, AR 72202

ARCHITECT/ENGINEER OF RECORD

A/E
JohnsonDanforth & Associates
2200 N. RODNEY PARHAM ROAD
SUITE 210
LITTLE ROCK, AR 72212

501-404-4811
jda@JohnsonDanforth.com

JDA PROJECT #: 2018.001

STAMP
STATE OF ALABAMA
DANIEL E. BUSH
NO. 6656
REGISTERED ARCHITECT
Digitally signed by Daniel E. Bush
Date: 2022.04.14 13:49:43-04'00'

Office of Construction and Facilities Management

VA U.S. Department of Veterans Affairs

Drawing Title: **EXTERIOR ELEVATIONS**

Approved: Project Director

Phase: **CONSTRUCTION DOCUMENTS**

FULLY SPRINKLERED

Project Title: **CONSTRUCT NEW WATER STORAGE FACILITY**

Project Number: **564-19-101**

Building Number: **39**

Location: **FAYETTEVILLE, AR**

Issue Date: 2022.07.15 | Checked: BUSH | Drawn: DEB

Drawing Number: **AE201**

E:\Vantage_ARCHITECTURE_BIM\ASSETS_PROJECTS\DAN\ed21.002-564-19-101 Fayetteville Water Storage\BIM\564-19-101_Fayetteville Water Storage_Arch-22.rvt

7/14/2022 3:33:10 PM

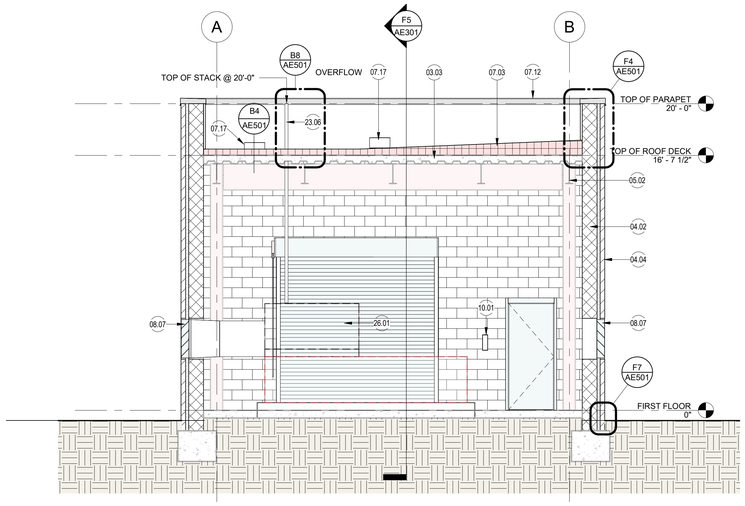

D2 **CROSS SECTION 2**
1/4" = 1'-0"

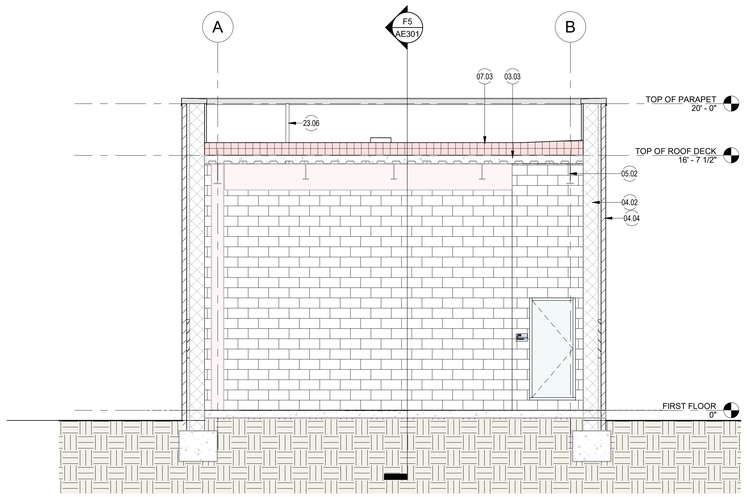

D5 **CROSS SECTION**
1/4" = 1'-0"

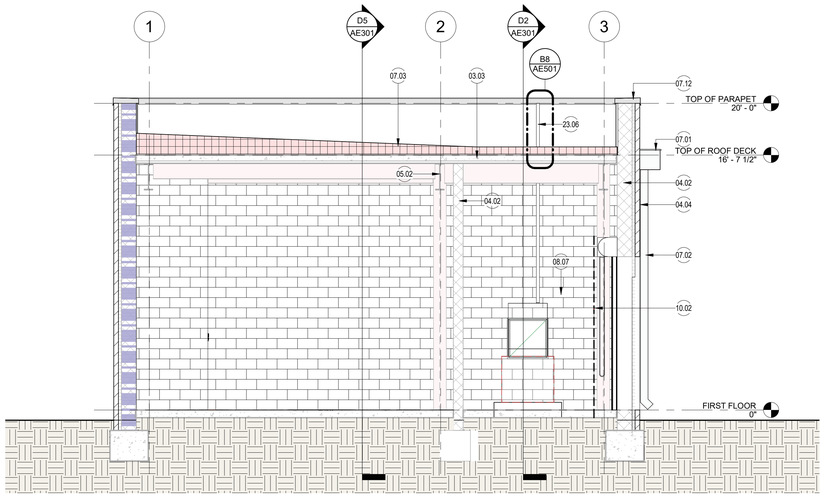

F5 **LONGITUDINAL SECTION**
1/4" = 1'-0"

0 2' 4' 8'
SCALE: 1/4" = 1'-0"

GENERAL NOTES

1. REFER TO GENERAL NOTES ON SHEET AE101 WHICH APPLY TO ENTIRE PROJECT.

SHEET NOTES

03.03 STRUCTURAL CONCRETE ROOF DECK
04.02 STRUCTURAL MASONRY WALL PER STRUCTURAL DRAWINGS
04.04 WALL TYPE E12. REF: SHEET AE501
05.02 STRUCTURAL STEEL FRAMING
07.01 SHEET METAL ROOF COLLECTION BOX
07.02 SHEET METAL DOWNSPOUT & SUPPORTS
07.03 ROOF TYPE TPO. REF: SHEET AE501
07.12 SHEET METAL PARAPET CAP FLASHING
07.17 SHEET METAL SCUPPER LINER
08.07 FIXED BLADE BLAST RATED LOUVER
10.01 FIRE EXTINGUISHER ON BRACKET (VV)
10.02 SUSPENDED BLAST CURTAIN
23.06 GENERATOR EXHAUST FLUE
26.01 GENERATOR AND BASE TANK - REF: ELECTRICAL

PARTITION LEGEND

NEW UNRATED PARTITION

NEW 1 HOUR CMU BARRIER
UL U906

Revisions: **Date:**

VA FORM 08 - 6231

CONSULTANTS

FIRE PROTECTION
FP&C CONSULTANTS KC, LLC
1330 BURLINGTON STREET, STE. 200
NORTH KANSAS CITY, MO 64116

SECURITY
GRW
801 CORPORATE DRIVE
LEXINGTON, KY 40503

CIVIL ENGINEER
HODGES ENGINEERING
231 SHORELINE DRIVE
MOUNTAIN HOME, AR 72653

STRUCTURAL ENGINEER
BERNHARD TME
BUILDING 2, 1 ALLIED DRIVE
SUITE 260
LITTLE ROCK, AR 72202

ARCHITECT/ENGINEER OF RECORD

A/E
JohnsonDanforth & Associates
2200 N. RODNEY PARHAM ROAD
SUITE 210
LITTLE ROCK, AR 72212

501-404-4811
jda@JohnsonDanforth.com

JDA PROJECT #: 2018.001

STAMP
STATE OF ALABAMA
DANIEL E. BUSH
NO. 6656
REGISTERED ARCHITECT
Digitally signed by Daniel E. Bush
Date: 2022.09.14 13:48:23-04'00'

Office of Construction and Facilities Management

VA U.S. Department of Veterans Affairs

Drawing Title: **BUILDING SECTIONS**

Approved: Project Director

Phase: **CONSTRUCTION DOCUMENTS**

FULLY SPRINKLERED

Project Title: **CONSTRUCT NEW WATER STORAGE FACILITY**

Project Number: **564-19-101**

Building Number: **39**

Location: **FAYETTEVILLE, AR**

Issue Date: 2022.07.15

Checked: BUSH

Drawn: DEB

Drawing Number: **AE301**

E:\Interphoto_ARCHITECTURE_BIM-ASSISTS_PROJECTS\JDA\dc21.002-564-19-101 Fayetteville Water Storage\BIM\564-19-101_Fayetteville Water Storage_Arch-22.rvt

7/14/2022 3:53:58 PM

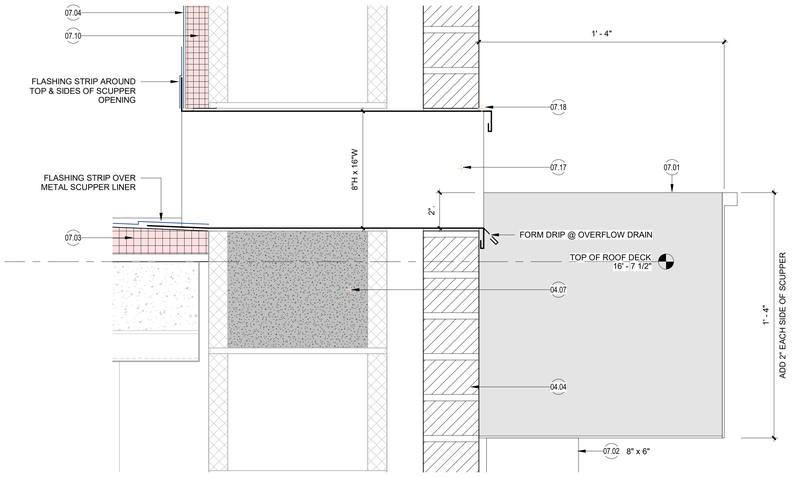

B4 **SCUPPER DETAIL**
3" = 1'-0"

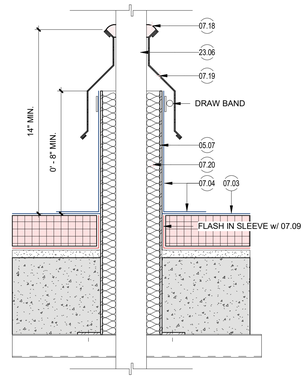

B8 **HOT STACK PENETRATION**
3" = 1'-0"

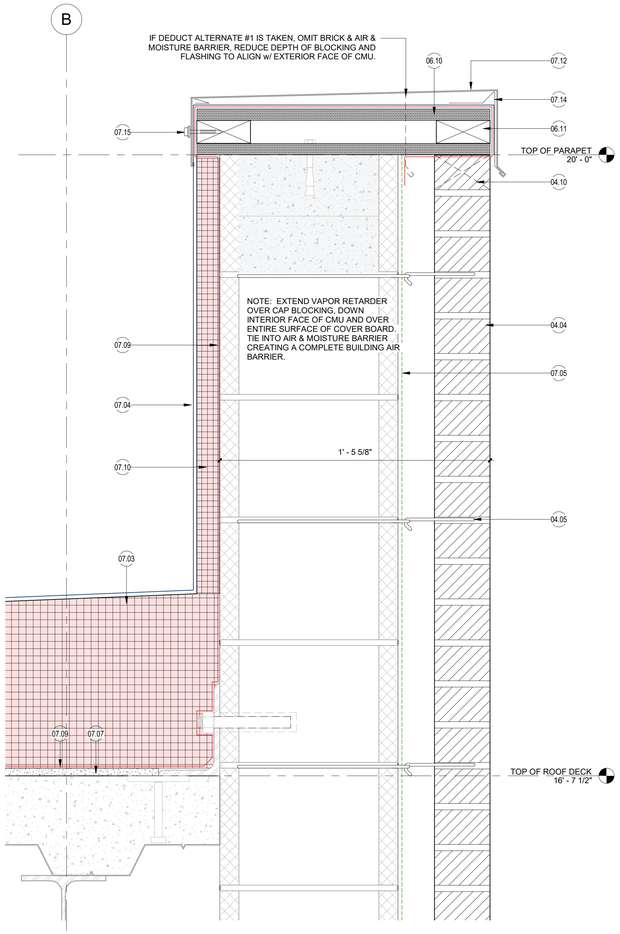

F4 **PARAPET DETAIL**
3" = 1'-0"

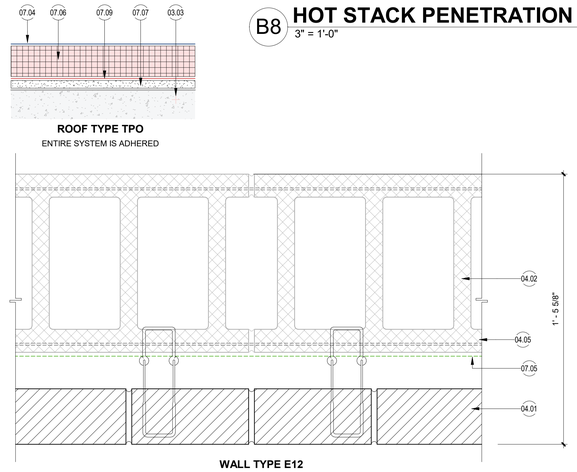

WALL TYPE E12

FACE BRICK IS PART OF DEDUCT ALTERNATE #1. IF DEDUCT IS TAKEN, OMIT FACE BRICK & AIR & MOISTURE BARRIER, SUBSTITUTE STRAIGHT LADDER REINFORCEMENT w/o PINTLE LOOPS, PAINT EXTERIOR EXPOSED FACES OF CMU, MODIFY CAP FLASHING & BLOCKING AS INDICATED ON PARAPET DETAIL.

D7 **WALL, ROOF TYPES**
3" = 1'-0"

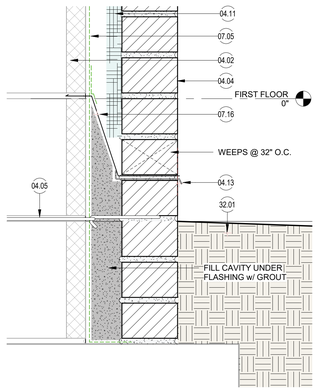

F7 **BASE OF WALL DETAIL**
3" = 1'-0"

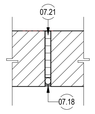

F2 **MASONRY CONTROL JOINT**
3" = 1'-0"

0 2" 4" 8"
SCALE: 3" = 1'-0"

GENERAL NOTES

1. REFER TO GENERAL NOTES ON SHEET AE101 WHICH APPLY TO ENTIRE PROJECT.

SHEET NOTES

03.03	STRUCTURAL CONCRETE ROOF DECK
04.01	FACE BRICK (PART OF DEDUCT ALTERNATE #1. REFER TO SHEET GI001 FOR SCHEDULE OF BID ITEMS)
04.02	STRUCTURAL MASONRY WALL PER STRUCTURAL DRAWINGS
04.04	WALL TYPE E12. REF: SHEET AE501
04.05	CMU LADDER REINFORCEMENT w/ PINTLE BRICK TIES. IF DEDUCT ALTERNATE IS TAKEN, REPLACE w/ LADDER REINFORCEMENT w/o PINTLE LOOPS
04.07	GROUT FILL CAVITY
04.10	PREFORMED WEEP BARRIER
04.11	PREFORMED CAVITY BARRIER
04.13	PREFORMED THROUGH WALL FLASHING DRIP PLATE
05.07	PIPE COLLAR ANCHORED TO DECK
06.10	FRT PLYWOOD
06.11	FRT WOOD BLOCKING
07.01	SHEET METAL ROOF COLLECTION BOX
07.02	SHEET METAL DOWNSPOUT & SUPPORTS
07.03	ROOF TYPE TPO. REF: SHEET AE501
07.04	TPO ROOFING MEMBRANE
07.05	FLUID-APPLIED AIR & MOISTURE BARRIER OVER ENTIRE EXTERIOR SURFACE OF CMU BEHIND BRICK. EXTEND 4" INCHES MINIMUM ONTO HORIZONTAL FOOTING AT BASE OF CMU.
07.06	TAPERED ROOF INSULATION - R10 MINIMUM VALUE AT ANY POINT
07.07	1/2" ROOF SUBSTRATE BOARD
07.09	VAPOR RETARDER OVER ENTIRE ROOF DECK SURFACE, UP CMU WALLS, OVER CAP BLOCKING AND TIE INTO AIR AND MOISTURE BARRIER. IF DEDUCT ALTERNATE REMOVING BRICK IS TAKEN, TERMINATE VAPOR RETARDER AT EXTERIOR FACE OF CMU BELOW BLOCKING.
07.10	1.5" RIGID INSULATION BOARD ADHERED TO CMU
07.12	SHEET METAL PARAPET CAP FLASHING
07.14	CAP FLASHING SPRING CLIPS
07.15	HIGH DOME FASTENER
07.16	SHEET METAL CAVITY FLASHING. SEAL WITH AIR & MOISTURE BARRIER @ TOP. EXTEND FACE TO WITHIN 1/8" OF EXTERIOR FACE OF BRICK.
07.17	SHEET METAL SCUPPER LINER
07.18	SEALANT (AND BACKER ROD) JOINT
07.19	SHEET METAL STACK HOOD COUNTER FLASHING
07.20	EXHAUST STACK COLLAR INSULATION LINER
07.21	NEOPRENE JOINT BACKER
23.06	GENERATOR EXHAUST FLUE
32.01	FINISH GRADE

Revisions: Date:

CONSULTANTS

FP&C CONSULTANTS

FIRE PROTECTION
FP&C CONSULTANTS KC, LLC
1330 BURLINGTON STREET, STE. 200
NORTH KANSAS CITY, MO 64116

GRW engineering | architecture | geospatial

SECURITY
GRW
801 CORPORATE DRIVE
LEXINGTON, KY 40503

Hodges Engineering — Strategies, Services & Solutions

CIVIL ENGINEER
HODGES ENGINEERING
231 SHORELINE DRIVE
MOUNTAIN HOME, AR 72653

Bernhard TME Engineering

STRUCTURAL ENGINEER
BERNHARD TME
BUILDING 2, 1 ALLIED DRIVE
SUITE 260
LITTLE ROCK, AR 72202

ARCHITECT/ENGINEER OF RECORD

A/E
JohnsonDanforth & Associates
2200 N. RODNEY PARHAM ROAD
SUITE 210
LITTLE ROCK, AR 72212

501-404-4811
jda@JohnsonDanforth.com

JDA PROJECT #: 2018.001

STAMP
STATE OF ALABAMA — DANIEL E. BUSH — NO. 6656 — REGISTERED ARCHITECT
Digitally signed by Daniel E. Bush
Date: 2022.07.14 10:06:30-04'00'

Office of Construction and Facilities Management

VA U.S. Department of Veterans Affairs

Drawing Title: **EXTERIOR DETAILS**

Approved: Project Director

Phase: **CONSTRUCTION DOCUMENTS**

FULLY SPRINKLERED

Project Title: **CONSTRUCT NEW WATER STORAGE FACILITY**

Project Number: **564-19-101**

Building Number: **39**

Location: **FAYETTEVILLE, AR**

Issue Date: 2022.07.15 | Checked: BUSH | Drawn: DEB

Drawing Number: **AE501**

E:\Ideaphed_ARCHITECTURE_BIM-ASSIST_PROJECTS\JDA\564-19-101 Fayetteville Water Storage\BIM\564-19-101_Fayetteville Water Storage_Arch.rvt22.rvt

7/14/2022 3:33:22 PM

VA FORM 08 - 6231

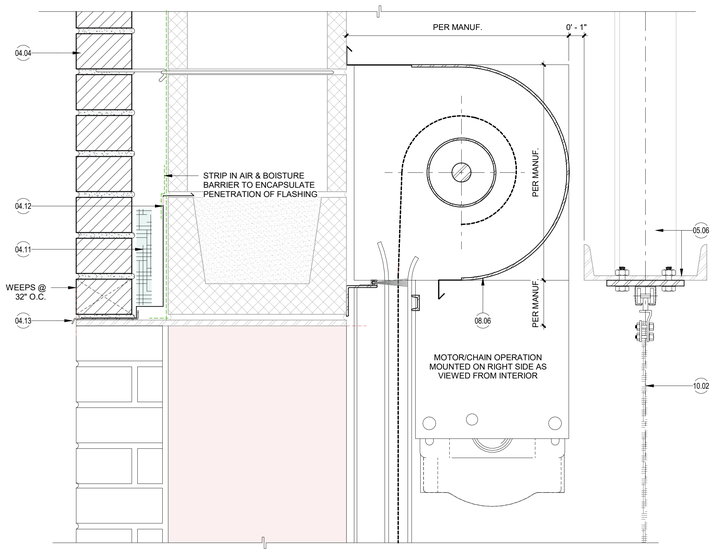

HEAD

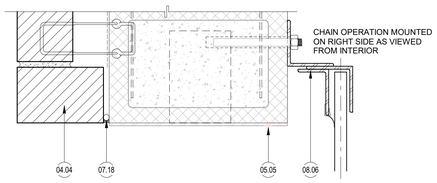

JAMB

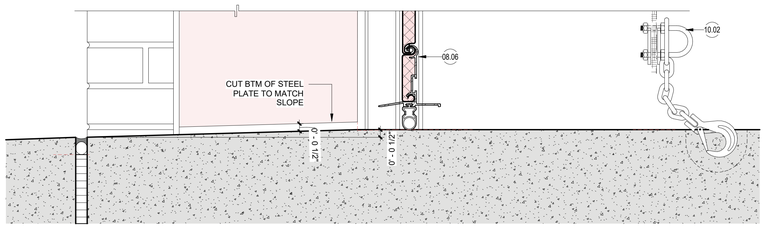

SILL

F2 OH DOOR DETAILS
3" = 1'-0"

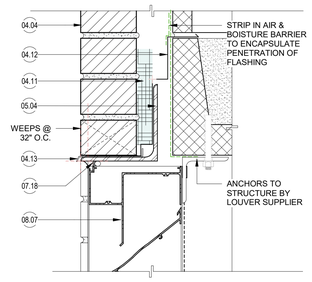

HEAD

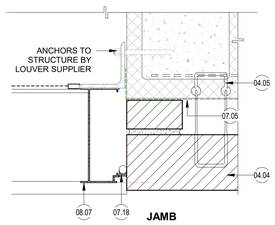

JAMB

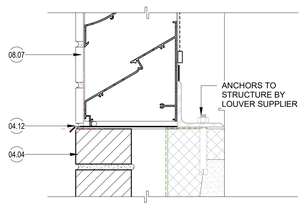

SILL

F5 LOUVER DETAILS
3" = 1'-0"

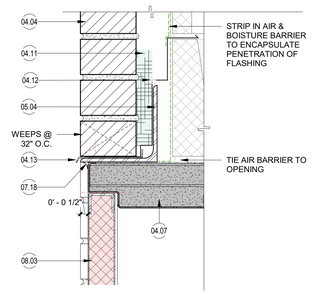

HEAD

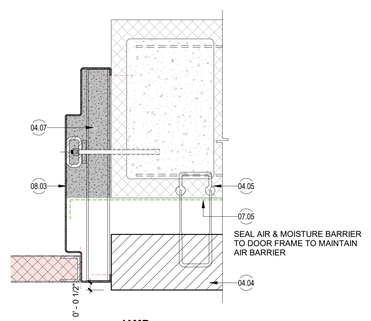

JAMB

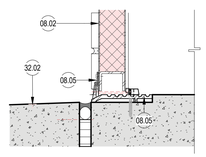

SILL

F6 BLAST RATED PASSAGE DOOR DETAILS
3" = 1'-0"

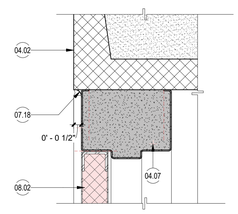

HEAD

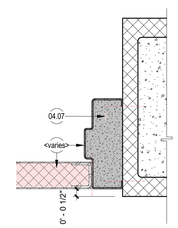

JAMB

F8 PASSAGE DOOR DETAILS
3" = 1'-0"

0 2" 4" 8"
SCALE: 3" = 1'-0"

GENERAL NOTES

1. REFER TO GENERAL NOTES ON SHEET AE101 WHICH APPLY TO ENTIRE PROJECT.

SHEET NOTES

04.02	STRUCTURAL MASONRY WALL PER STRUCTURAL DRAWINGS
04.04	WALL TYPE E12. REF: SHEET AE501
04.05	CMU LADDER REINFORCEMENT w/ PINTLE BRICK TIES. IF DEDUCT ALTERNATE IS TAKEN, REPLACE w/ LADDER REINFORCEMENT w/o PINTLE LOOPS
04.07	GROUT FILL CAVITY
04.11	PREFORMED CAVITY BARRIER
04.12	THROUGH-WALL FLASHING
04.13	PREFORMED THROUGH WALL FLASHING DRIP PLATE
05.04	STEEL LINTEL
05.05	STEEL JAMB LINER - REF. STRUCTURAL
05.06	STEEL SUPPORTS REF; STRUCTURAL
07.05	FLUID-APPLIED AIR & MOISTURE BARRIER OVER ENTIRE EXTERIOR SURFACE OF CMU BEHIND BRICK. EXTEND 4" INCHES MINIMUM ONTO HORIZONTAL FOOTING AT BASE OF CMU.
07.18	SEALANT (AND BACKER ROD) JOINT
08.02	SCHEDULED DOOR/WINDOW UNIT
08.03	INTEGRATED BLAST RATED HM DOOR & FRAME UNIT
08.05	SCHEDULED DOOR HARDWARE
08.06	OVERHEAD COILING DOOR UNIT
08.07	FIXED BLADE BLAST RATED LOUVER
10.02	SUSPENDED BLAST CURTAIN
32.02	ADJACENT WALK - REF. CIVIL.
<varies>	

E:\Vantage_ARCHITECTURE_BIM\ASSETS_PROJECTS\DAN\dc21.002-564-19-101 Fayetteville Water Storage\BIM\564-19-101_Fayetteville Water Storage_Arch-22.rvt

7/14/2022 3:33:27 PM

Revisions: Date:

VA FORM 08 - 6231

CONSULTANTS

FPC CONSULTANTS

FIRE PROTECTION
FP&C CONSULTANTS KC, LLC
1330 BURLINGTON STREET, STE. 200
NORTH KANSAS CITY, MO 64116

GRW engineering | architecture | geospatial

SECURITY
GRW
801 CORPORATE DRIVE
LEXINGTON, KY 40503

Hodges Engineering — Strategies, Services & Solutions

CIVIL ENGINEER
HODGES ENGINEERING
231 SHORELINE DRIVE
MOUNTAIN HOME, AR 72653

Bernhard TME Engineering

STRUCTURAL ENGINEER
BERNHARD TME
BUILDING 2, 1 ALLIED DRIVE
SUITE 260
LITTLE ROCK, AR 72202

ARCHITECT/ENGINEER OF RECORD

A/E
JohnsonDanforth & Associates
2200 N. RODNEY PARHAM ROAD
SUITE 210
LITTLE ROCK, AR 72212

501-404-4811
jda@JohnsonDanforth.com

JDA PROJECT #: 2018.001

STAMP

STATE OF ALABAMA — DANIEL E. BUSH — NO. 6656 — REGISTERED ARCHITECT

Digitally signed by Daniel E. Bush
Date: 2022.07.14 15:47:43-04'00'

Office of Construction and Facilities Management

VA U.S. Department of Veterans Affairs

Drawing Title: OPENING DETAILS

Approved: Project Director

Phase: CONSTRUCTION DOCUMENTS

FULLY SPRINKLERED

Project Title: CONSTRUCT NEW WATER STORAGE FACILITY

Location: FAYETTEVILLE, AR

Issue Date: 2022.07.15 | Checked: BUSH | Drawn: DEB

Project Number: 564-19-101

Building Number: 39

Drawing Number: AE502

DOOR SCHEDULE

MARK	PANELS						FRAME		FIRE RATING	HW SET	REMARKS
	PANEL 1		PANEL 2		PANEL HEIGHT	FINISH	TYPE	FINISH			
	TYPE	WIDTH	TYPE	WIDTH							
101A	40	3' - 0"			7' - 0"	HM PAINT	BLAST-HM	HM PAINT	-	E3A	BLAST RATED, ACCESS CONTROL
101B	60	8' - 0"			10' - 0"	OH PAINT	OHMANUF	HM PAINT	1 HOUR	E5	
101D	60	10' - 0"			10' - 0"	OH PAINT	OHMANUF	HM PAINT	-	E5	
101E	40	3' - 0"			7' - 0"	HM PAINT	BLAST-HM	HM PAINT	-	E3A	BLAST RATED, ACCESS CONTROL
102	2	3' - 0"	2	3' - 0"	7' - 0"	HM PAINT	HM	HM PAINT	-	SH-9	ACCESS CONTROL
103	2	2' - 8"			6' - 4"	HM PAINT	HM 4-SIDED	HM PAINT	-	HW-1C	4 SIDED FRAME

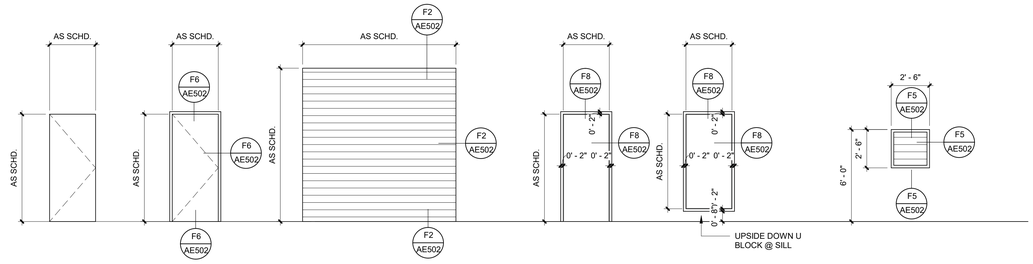

2
FLUSH

40 / BLAST-HM
BLAST RATED INTEGRATED INSULATING DOOR / FRAME / HW ASSEMBLY

60
OVERHEAD MOTOR OPERATED COILING DOOR

DOOR TYPES

HM
HOLLOW METAL

PROVIDE >2" HEAD @ MASONRY OPENINGS WHERE REQUIRED TO COURSE

HM 4-SIDED

FRAME TYPES

L1
BLAST RATED FIXED BLADE LOUVER W/ BLAST DAMPER

REF: MECHANICAL

LOUVER TYPES

ROOM FINISH SCHEDULE

ROOM NO.	ROOM NAME	BASE	FLOOR	WALLS	CEILING
101	EQUIPMENT ROOM	-	EPOXY	P	EXP - P
102	SECURITY CLOSET	-	EPOXY	P	EXP - P
104	GENERATOR ROOM	-	EPOXY	P	EXP - P
103	CHLORINATION	EPOXY	EPOXY	P	EXP - P

INTERIOR FINISH ABBREVIATION LEGEND:

HMPAINT: PAINTED HOLLOW METAL DOOR/FRAME
OHPAINT: PAINTED OVERHEAD COILING DOOR/FRAME
P: PAINT
EPOXY: HIGH BUILD EPOXY PAINT. TURN 8" UP WALL WHERE WHERE SHOWN FOR BASE.
EXP-P: EXPOSED STRUCTURE, PAINTED

EXPOSED STRUCTURE TO BE PAINTED TO MATCH SW7076 CYBERSPACE.
ALL WALLS, HM DOORS AND FRAMES TO BE PAINTED TO MATCH SW7042 SHOJI WHITE.
ALL FLOORS TO BE PAINTED TO MATCH SW 7021 SIMPLE WHITE.

EXTERIOR FINISHES:

PAINT EXPOSED CMU, HM DOORS AND FRAMES TO MATCH CAMPUS STANDARD BRICK. OBTAIN APPROVAL OF COLOR IN WRITING FROM COR BEFORE APPLICATION.

PAINT EXPOSED WATER TOWER COMPONENTS TO MATCH COR SAMPLE.

METAL LOUVERS TO BE FACTORY FINISHED 2-COAT KYNAR TO MATCH CAMPUS STANDARD BRICK.

SIGNAGE SCHEDULE

TYPE	TACTILE MESSAGE / TOP LINE OF MESSAGE	MESSAGE	MOUNTING TYPE
EXTERIOR	Building	39	CONCEALED ANCHORS
INTERIOR	102	Security	ADHESIVE TAPE
INTERIOR	103	Chlorination	ADHESIVE TAPE

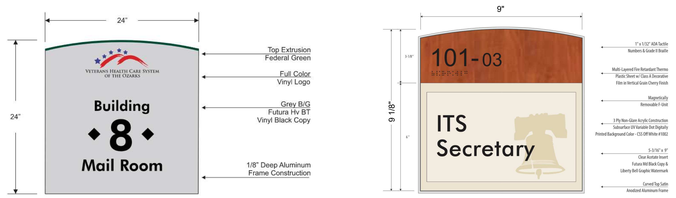

EXTERIOR

INTERIOR

2 **SIGN TYPES**
1/8" = 1'-0"

7/14/2022 3:33:32 PM

E:\Projects_ARCHITECTURE_BIM ASSIST_PROJECTS\JDA\jda21.002 564-19-101 Fayetteville Water Storage\BIM\564-19-101_Fayetteville Water Storage_Arch 22.rvt

Revisions: Date:

VA FORM 08 - 6231

CONSULTANTS

FIRE PROTECTION
FP&C CONSULTANTS KC, LLC
1330 BURLINGTON STREET, STE. 200
NORTH KANSAS CITY, MO 64116

SECURITY
GRW
801 CORPORATE DRIVE
LEXINGTON, KY 40503

CIVIL ENGINEER
HODGES ENGINEERING
231 SHORELINE DRIVE
MOUNTAIN HOME, AR 72653

STRUCTURAL ENGINEER
BERNHARD TME
BUILDING 2, 1 ALLIED DRIVE
SUITE 260
LITTLE ROCK, AR 72202

ARCHITECT/ENGINEER OF RECORD

A/E
JohnsonDanforth & Associates
2200 N. RODNEY PARHAM ROAD
SUITE 210
LITTLE ROCK, AR 72212

501-404-4811
jda@JohnsonDanforth.com

JDA PROJECT #: 2018.001

STAMP

STATE OF ALABAMA
DANIEL E. BUSH
NO. 6658
REGISTERED ARCHITECT

Digitally Signed by Daniel E. Bush
Date: 2022.07.14 15:51:12-04'00'

Office of Construction and Facilities Management

VA U.S. Department of Veterans Affairs

Drawing Title
OPENING, FINISH AND SIGNAGE SCHEDULES & TYPES

Approved: Project Director

Phase
CONSTRUCTION DOCUMENTS

FULLY SPRINKLERED

Project Title
CONSTRUCT NEW WATER STORAGE FACILITY

Location
FAYETTEVILLE, AR

Issue Date: 2022.07.15
Checked: BUSH
Drawn: DEB

Project Number: **564-19-101**
Building Number: **39**
Drawing Number: **AE601**

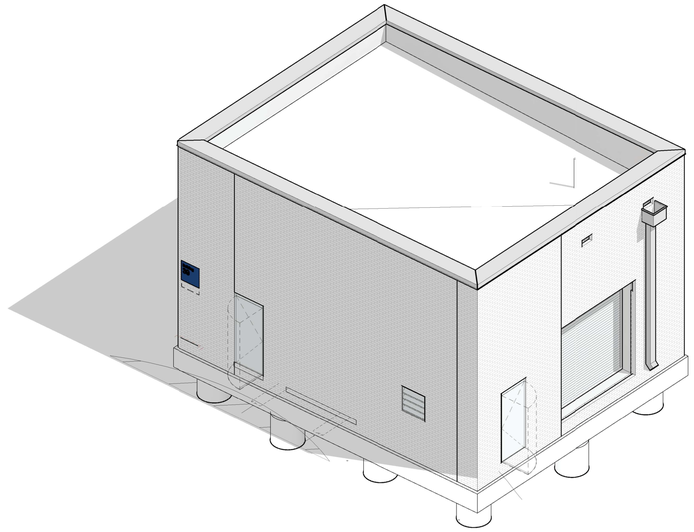

3D OVERHEAD VIEW FROM SOUTHEAST

2

NOTE: GRADE NOT SHOWN FOR CLARITY

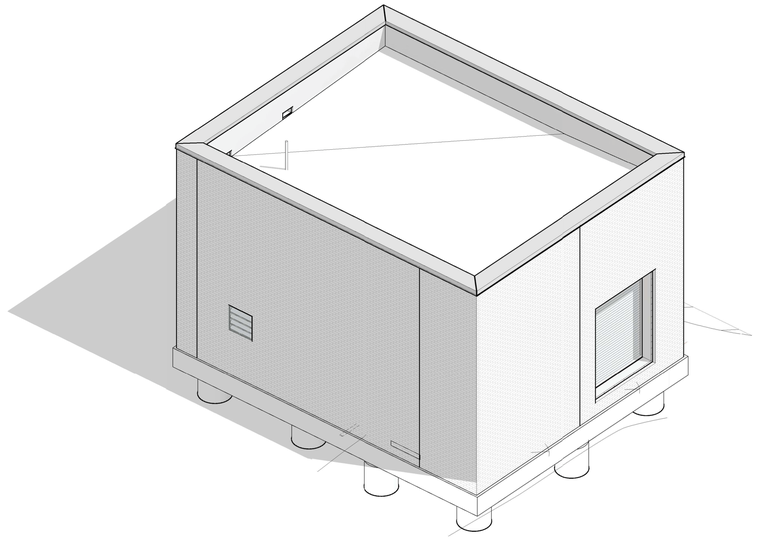

3D OVERHEAD VIEW FROM NORTHWEST

1

NOTE: GRADE NOT SHOWN FOR CLARITY

7/11/2022 5:36:39 PM

E:\Revit_ARCHITECTURE_BIM ASSIST_PROJECTS\JDA\564-21-002 564-19-101 Fayetteville Water Storage\BIM\564-19-101_Fayetteville Water Storage_Arch r22.rvt

Revisions: **Date:**

VA FORM 08 - 6231

CONSULTANTS

FIRE PROTECTION
FP&C CONSULTANTS KC, LLC
1330 BURLINGTON STREET, STE. 200
NORTH KANSAS CITY, MO 64116

SECURITY
GRW
801 CORPORATE DRIVE
LEXINGTON, KY 40503

CIVIL ENGINEER
HODGES ENGINEERING
231 SHORELINE DRIVE
MOUNTAIN HOME, AR 72653

STRUCTURAL ENGINEER
BERNHARD TME
BUILDING 2, 1 ALLIED DRIVE
SUITE 260
LITTLE ROCK, AR 72202

ARCHITECT/ENGINEER OF RECORD

A/E
JohnsonDanforth & Associates
2200 N. RODNEY PARHAM ROAD
SUITE 210
LITTLE ROCK, AR 72212

501-404-4811
jda@JohnsonDanforth.com

JDA PROJECT #: 2018.001

STAMP

STATE OF ALABAMA
DANIEL E. BUSH
NO. 6658
REGISTERED ARCHITECT

Digitally signed by Daniel E. Bush
Date: 2022.07.11 18:15:41-04'00'

Office of Construction and Facilities Management

VA U.S. Department of Veterans Affairs

Approved: Project Director

Drawing Title
PROJECT 3D VIEWS

Phase
CONSTRUCTION DOCUMENTS

FULLY SPRINKLERED

Project Title
CONSTRUCT NEW WATER STORAGE FACILITY

Location
FAYETTEVILLE, AR

Issue Date 2022.07.15
Checked BUSH
Drawn DEB

Project Number 564-19-101
Building Number 39
Drawing Number AE901

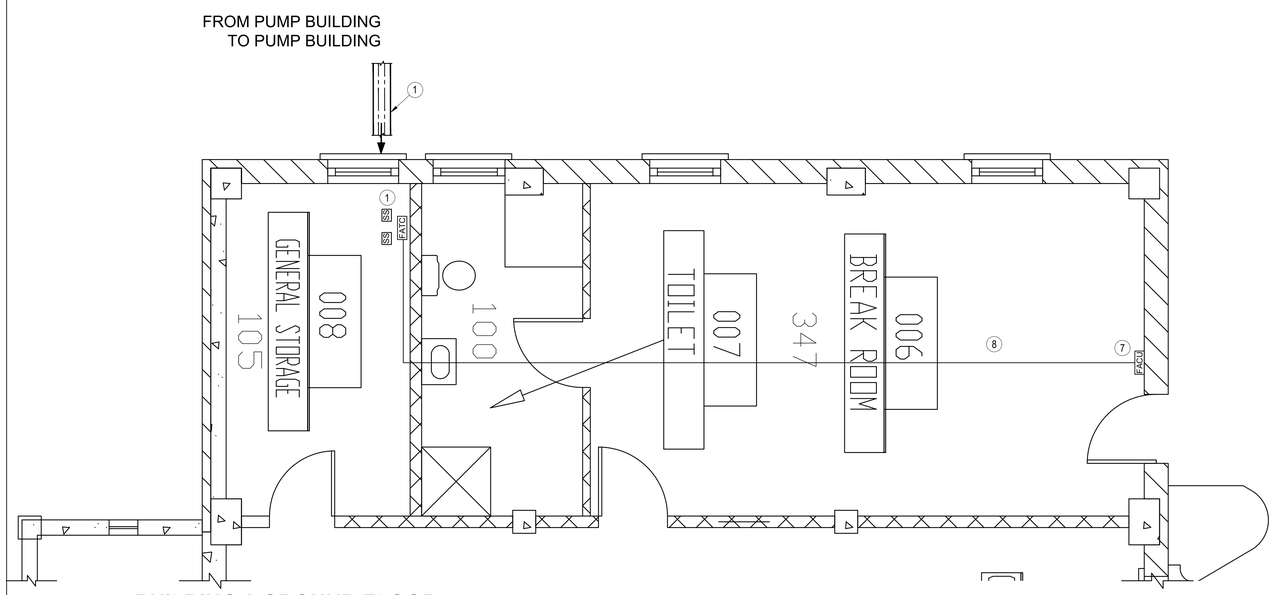

F2 **BUILDING 8 GROUND FLOOR**
3/8" = 1'-0"

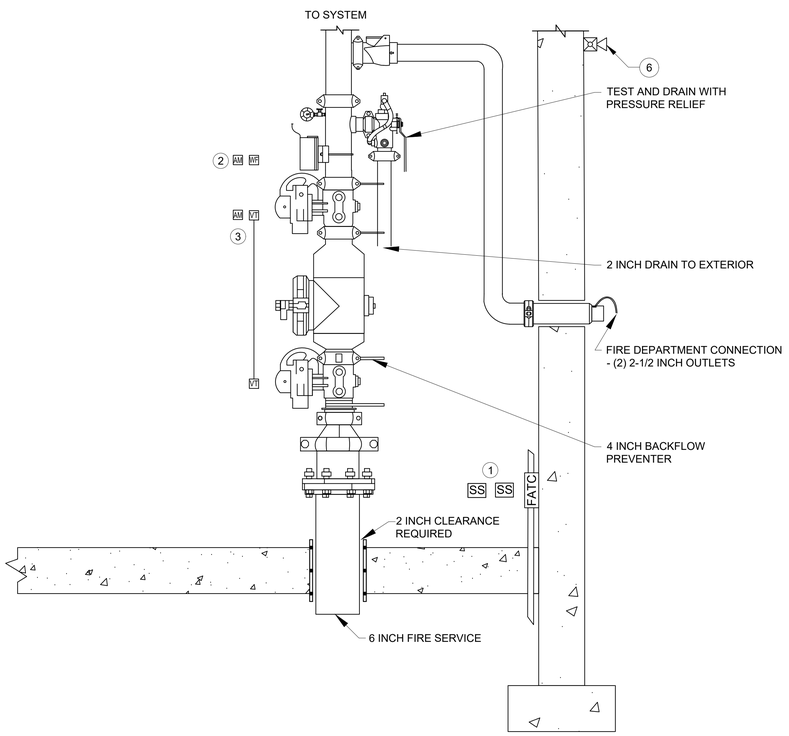

A FA101 **FIRE SERVICE DETAIL**
NOT TO SCALE

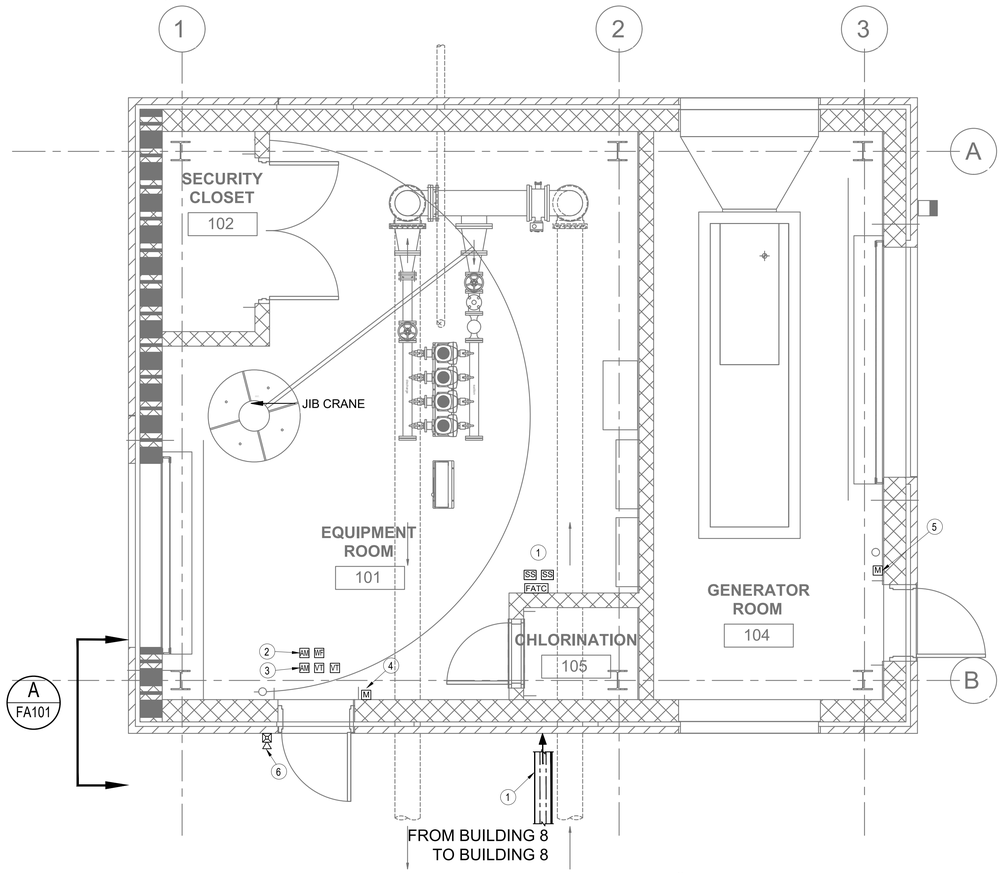

F1 **PUMP HOUSE FLOOR PLAN**
3/8" = 1'-0"

N

32" 0 16" 32"
SCALE: 3/8" = 1'-0"

GENERAL NOTES

1. PROVIDE AND INSTALL NEW FIRE ALARM INITIATING DEVICES AND NOTIFICATION APPLIANCES AS NOTED ON THIS CONTRACT DRAWING.
2. THIS DRAWING INDICATES THE GENERAL LOCATIONS OF NEW FIRE ALARM DEVICES AND APPLIANCES LOCATED THROUGHOUT THE AREAS OF WORK. THE CONTRACTOR SHALL BE RESPONSIBLE FOR DETERMINING EXACT LOCATIONS OF ALL FIRE ALARM SYSTEM COMPONENTS APPLICABLE TO THE SCOPE OF WORK.
3. THE PROJECT SCOPE OF WORK INCLUDES CONSTRUCTION OF THE NEW WATER PUMP BUILDING STRUCTURE SHOWN. THE PROJECT FIRE ALARM SCOPE OF WORK SHALL CONSIST OF PROVIDING AND INSTALLING NEW FIRE ALARM INITIATING DEVICES, SURGE PROTECTIVE SERVICES, NEW CIRCUITS AND CONDUIT, FIRE ALARM TERMINAL CABINETS AND NEW NOTIFICATION APPLIANCES INDICATED ON THIS DRAWING AND PROGRAMMING THE EXISTING FIRE ALARM CONTROL UNIT LOCATED IN BUILDING 8.
4. THE EXISTING FIRE ALARM CONTROL UNIT PROVIDING MONITORING AND CONTROL IN BUILDING 8 IS AN ADDRESSABLE NOTIFIER 320 UNIT.
5. PROVIDE AND INSTALL NEW ADDRESSABLE DEVICES IN THE WATER PUMP BUILDING. MODIFY THE EXISTING SIGNALING LINE CIRCUIT IN BUILDING 8 TO ROUTE FROM BUILDING 8 TO THE NEW WATER PUMP BUILDING AND CONNECT TO THE ADDRESSABLE DEVICES INDICATED. ALL CIRCUITS EXITING BOTH BUILDINGS SHALL BE PROTECTED BY UL 497B LISTED SURGE PROTECTIVE DEVICES.
6. EXISTING CIRCUITRY AND CONDUIT SYSTEMS SHALL BE MODIFIED FOR A COMPLETE OPERATING SYSTEM. ALL MODIFIED AND NEW FIELD CIRCUIT CONDUCTORS SHALL LAND AT THE TERMINALS OF DEVICES. FIELD SPLICING OF FIRE ALARM CIRCUITS IS PROHIBITED.
7. ALL FIRE ALARM CIRCUITS SHALL BE INSTALLED IN CONDUIT. ALL EXPOSED ABOVE GROUND CONDUIT SHALL BE PAINTED RED.
8. THE CONTRACTOR SHALL BE RESPONSIBLE FOR REMOVAL OF ALL ABANDONED FIRE ALARM CONDUIT AND WIRING.
9. CIRCUIT CLASS REQUIREMENTS:

   SIGNALING LINE CIRCUITS - THE EXISTING SIGNALING LINE CIRCUIT ROUTED FROM BUILDING 8 TO THE WATER PUMP BUILDING SHALL BE WIRED CLASS B WITH A REDUNDANT PATHWAY LOCATED IN THE SAME UNDERGROUND CONDUIT.

   NOTIFICATION APPLIANCE CIRCUITS - 120 VOLT APPLIANCE CIRCUITS DO NOT REQUIRE SUPERVISION.
10. ALL MODIFICATIONS TO THE FIRE ALARM SYSTEM SHALL BE IN ACCORDANCE WITH NFPA 72, NATIONAL FIRE ALARM CODE, 2022 EDITION AND SPECIFICATION 28 31 00. THE CONTRACTOR SHALL COORDINATE ALL WORK AND IMPAIRMENTS TO THE BUILDING 9 FIRE ALARM SYSTEM WITH THE VA FACILITY MANAGER.
11. PRELIMINARY TESTING: CONDUCT PRELIMINARY TESTS TO ENSURE THAT ALL DEVICES, APPLIANCES AND CIRCUITS ARE FUNCTIONING PROPERLY. AFTER PRELIMINARY TESTING IS COMPLETE, PROVIDE A LETTER CERTIFYING THAT THE INSTALLATION IS COMPLETE AND FULLY OPERABLE.
12. FINAL TESTING: NOTIFY THE CONTRACTING OFFICER IN WRITING WHEN THE SYSTEM IS READY FOR FINAL ACCEPTANCE TESTING. SUBMIT THE REQUEST FOR TESTING AT LEAST 15 CALENDAR DAYS PRIOR TO TEST DATE. THE FINAL TESTS SHALL BE WITNESSED BY A DESIGNATED REPRESENTATIVE OF THE VA.
13. RECORD DOCUMENTATION, INCLUDING AS-BUILT DRAWINGS AND A NFPA 72 RECORD OF COMPLETION REPORT, IS REQUIRED UPON COMPLETION OF THE PROJECT. REFER TO SPECIFICATION 28 31 00.

SHEET NOTES

1. PROVIDE AND INSTALL EXTENSION OF THE EXISTING BUILDING 8 CLASS B SIGNALING LINE CIRCUIT. ROUTE IN 2-INCH UNDERGROUND CONDUIT PROVIDED AND INSTALLED UNDER THE SCOPE OF THIS PROJECT. PROVIDE, INSTALL AND CONNECT SURGE PROTECTIVE DEVICES TO EACH SIGNALING LINE CIRCUIT PATHWAY. LOCATE AND MOUNT SURGE PROTECTIVE DEVICES IN FIRE ALARM TERMINAL CABINET.
2. ADDRESSABLE MONITOR MODULE FOR WATERFLOW SWITCH. ZONE MESSAGE TEXT-WATER PUMP BUILDING WATERFLOW. PROGRAM TO ANNUNCIATE AS AN ALARM ZONE.
3. ADDRESSABLE MONITOR MODULE FOR VALVE TAMPER SWITCHES. ZONE MESSAGE TEXT - WATER PUMP BUILDING BACKFLOW ISOLATION VALVE TAMPER. CONNECT INITIATING DEVICE CIRCUIT TO BOTH BACKFLOW PREVENTER ISOLATION VALVES PROGRAM TO ANNUNCIATE AS A SUPERVISORY ZONE.
4. ADDRESSABLE FIRE ALARM BOX. ZONE MESSAGE TEXT - WATER PUMP BUILDING SOUTH EXIT.PROGRAM TO ANNUNCIATE AS AN ALARM ZONE.
5. ADDRESSABLE FIRE ALARM BOX. ZONE MESSAGE TEXT - WATER PUMP BUILDING EAST EXIT. PROGRAM TO ANNUNCIATE AS AN ALARM ZONE.
6. PROVIDE AND INSTALL A WEATHERPROOF 120 VOLT HORN/STROBE APPLIANCE. CONNECT APPLIANCE TO 2ND SWITCH ON THE DOUBLE THROW WATERFLOW SWITCH INSTALLED ON THE WET PIPE SPRINKLER SYSTEM. CONNECT 120 VOLT POWER TO A DEDICATED CIRCUIT. COORDINATE WITH ELECTRICAL CONTRACTOR.
7. BUILDING 8 FIRE ALARM CONTROL UNIT.
8. MODIFIED FIRE ALARM SIGNALING LINE CIRCUIT PATHWAY IN CONDUIT.

LEGEND

X	KEYED NOTE DESIGNATION
AM	ADDRESSABLE MONITOR MODULE
M	MANUAL FIRE ALARM BOX
WF	WATERFLOW SWITCH
VT	VALVE TAMPER SWITCH
SS	SURGE PROTECTIVE DEVICE
FACU	FIRE ALARM CONTROL UNIT
FATC	FIRE ALARM TERMINAL CABINET
	120 VOLT HORN/STROBE APPLIANCE
	FIRE ALARM SIGNALING LINE CIRCUIT

PARTITION LEGEND

	NEW UNRATED PARTITION
	NEW / EXISTING 1 HOUR BARRIER

Revisions: Date:

CONSULTANTS

FIRE PROTECTION: FP&C CONSULTANTS KC, LLC — 1330 BURLINGTON STREET, STE. 200, NORTH KANSAS CITY, MO 64116

SECURITY: GRW — 801 CORPORATE DRIVE, LEXINGTON, KY 40503

CIVIL ENGINEER: HODGES ENGINEERING — 231 SHORELINE DRIVE, MOUNTAIN HOME, AR 72653

STRUCTURAL ENGINEER: BERNHARD TME — BUILDING 2, 1 ALLIED DRIVE, SUITE 260, LITTLE ROCK, AR 72202

ARCHITECT/ENGINEER OF RECORD

A/E
JohnsonDanforth & Associates
2200 N. RODNEY PARHAM ROAD
SUITE 210
LITTLE ROCK, AR 72212

501-404-4811
jda@JohnsonDanforth.com

JDA PROJECT #: 2018.001

STAMP

Office of Construction and Facilities Management

VA U.S. Department of Veterans Affairs

Drawing Title: PUMP HOUSE FIRE ALARM PLAN	Phase: CONSTRUCTION DOCUMENTS	Project Title: CONSTRUCT NEW WATER STORAGE FACILITY	Project Number: 564-19-101
Approved: Project Director	FULLY SPRINKLERED	Location: FAYETTEVILLE, AR	Building Number
		Issue Date: 2022.07.15 / Checked: JAS / Drawn: LBR	Drawing Number: FA101

VA FORM 08 - 6231

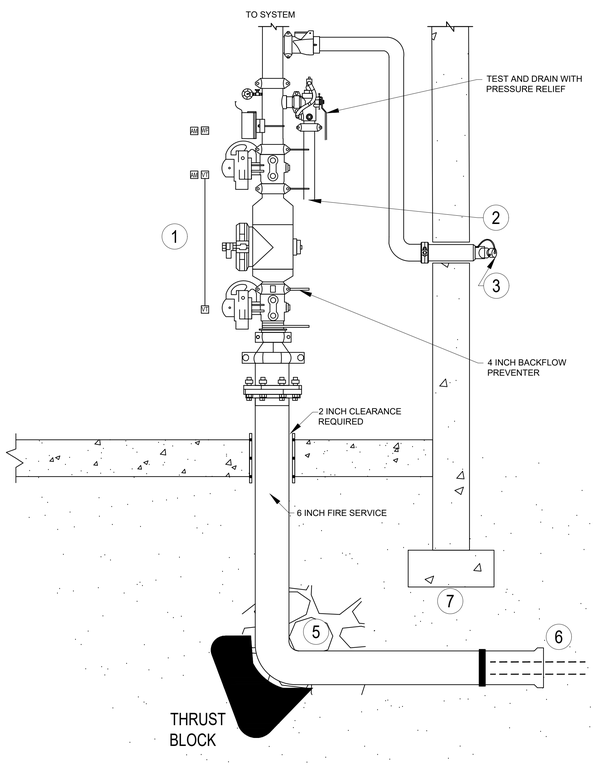

A / FX101 FIRE SERVICE RISER DETAIL
NOT TO SCALE

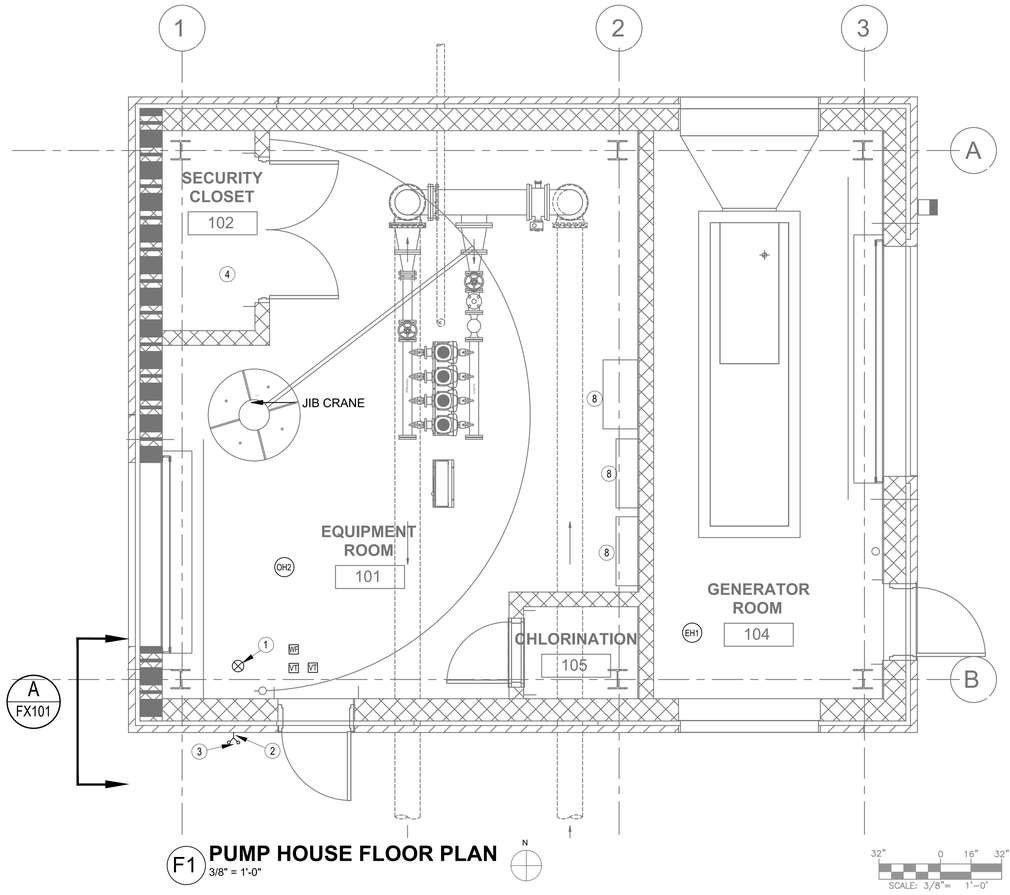

F1 PUMP HOUSE FLOOR PLAN
3/8" = 1'-0"

GENERAL NOTES

1. THE PROJECT SCOPE OF WORK INCLUDES CONSTRUCTION OF THE NEW BUILDING STRUCTURE SHOWN. THE PROJECT FIRE SUPPRESSION SCOPE OF WORK SHALL CONSIST OF PROVIDING WET PIPE SPRINKLER PROTECTION THROUGHOUT THE NEW BUILDING.
2. WORK SHALL BEGIN 5 FEET OUTSIDE OF THE BUILDING. PROVIDE AND INSTALL THE IN-BUILDING RISER; COORDINATE CONNECTION TO A NEW 6-INCH FIRE SERVICE MAIN TO BE INSTALLED UNDER THE SCOPE OF THIS PROJECT BY THE UNDERGROUND CONTRACTOR. THE APPROXIMATE LOCATION FOR THE IN-BUILDING RISER IS INDICATED. THE CONTRACTOR SHALL BE RESPONSIBLE FOR COORDINATING THE FINAL LOCATION OF THE IN-BUILDING RISER WITH THE PROJECT STRUCTURAL CONTRACTOR.
3. PROVIDE AND INSTALL ALL ABOVE GROUND PIPING AND APPERTANCES SHOWN, AND AS REQUIRED FOR A COMPLETE SYSTEM. THE LOCATION OF ABOVE GROUND PIPING SHALL BE COORDINATED FOR CLEARANCES WITH THE JIB CRANE OPERATING SPACE REQUIREMENTS.
4. PROVIDE CORROSIVE RESISTIVE INTERMEDIATE TEMPERATURE, QUICK RESPONSE SPRINKLERS IN EQUIPMENT ROOM 101. PROVIDE CORROSIVE RESISTIVE HIGH TEMPERATURE, QUICK RESPONSE SPRINKLERS IN GENERATOR ROOM 104.
5. THE INSTALLATION SHALL BE IN ACCORDANCE WITH NFPA 13, INSTALLATION OF SPRINKLER SYSTEMS, 2022 EDITION AND SPECIFICATION 21 13 13.
6. THIS STRUCTURE REQUIRES PROTECTION IN ACCORDANCE FOR A SEISMIC DESIGN CATEGORY C. SEISMIC BRACING AND RESTRAINT PER NFPA 13 IS REQUIRED. SPRINKLER PIPING PENETRATIONS THROUGH WALLS REQUIRE CLEARANCE OR FLEXIBLE PIPE COUPLINGS INSTALLED PER NFPA 13.
7. THE PREPARATION OF SPRINKLER SHOP DRAWINGS SHALL BE BY A NICET LEVEL III OR IV TECHNICIAN OR A REGISTERED FIRE PROTECTION ENGINEER. INSTALLATION SHALL BE PERFORMED BY A CERTIFIED SPRINKLER CONTRACTOR OR A SPECIALIST WHO IS EXPERIENCED IN THE DESIGN AND INSTALLATION OF AUTOMATIC SPRINKLER SYSTEMS (MINIMUM 3 YEARS OF EXPERIENCE).
8. STEEL PIPING WITH A WALL THICKNESS LESS THAN SCHEDULE 40 SHALL NOT BE THREADED. MINIMUM PIPE SCHEDULE SHALL BE SCHEDULE 10. PIPE 2 INCHES AND SMALLER SHAL BE SCHEDULE 40.
9. PLAIN END FITTINGS ARE NOT PERMITTED. MECHANICAL TEE (SADDLE-TYPE) FITTINGS ARE NOT PERMITTED.
10. PRELIMINARY TESTING: HYDROSTATICALLY TEST THE WET PIPE SPRINKLER SYSTEM, AS REQUIRED BY NFPA 13 AND SPECIFICATION 21 13 13, IN THE PRESENCE OF THE DESIGNATED GOVERNMENT REPRESENTATIVE.
11. FINAL INSPECTION AND TESTING: ADVISE THE CONTRACTING OFFICER WHEN HYDROSTATIC AND ALARM TESTS HAVE BEEN COMPLETED AND ALL NECESSARY CORRECTIONS MADE, SO AS TO PERMIT FINAL INSPECTION AND TESTING.
12. THE FINAL TEST SHALL BE WITNESSED BY THE DESIGNATED REPRESENTATIVE OF THE VA. FINAL TESTING SHALL INCLUDE, BUT IS NOT LIMITED TO, TESTING OF WATERFLOW AND TAMPER SWITCHES CONNECTED TO THE NEW SPRINKLER PIPING SYSTEM.
13. RECORD DOCUMENTATION, INCLUDING AS-BUILT DRAWINGS, IS REQUIRED UPON COMPLETION OF THE PROJECT. REFER TO SPECIFICATION 21 13 13.
14. WATER SUPPLY FOR HYDRAULIC CALCULATIONS:

STATIC PRESSURE	65 PSI
RESIDUAL PRESSURE	55 PSI
FLOW	1200 GPM
LOCATION	POINT OF CONNECTION TO EXISTING WATER MAIN

SHEET NOTES

1. PROVIDE AND INSTALL NEW 4 INCH VERTICAL BACKFLOW PREVENTER AND VALVE STATION PROVIDED WITH WATERFLOW SWITCH, INSPECTOR TEST AND DRAIN VALVE, 2-INCH MAIN DRAIN AND FIRE DEPARTMENT CONNECTION.
2. PIPE MAIN DRAIN DISCHARGE TO EXTERIOR OF BUILDING. CONTRACTOR SHALL PROVIDE A CONCRETE SPLASH BLOCK BELOW THE MAIN DRAIN OUTLET.
3. PROVIDE AND INSTALL A FIRE DEPARTMENT CONNECTION WITH (2) 2-1/2" CONNECTIONS. PROVIDE AND INSTALL FDC SIGNAGE.
4. PROVIDE AND INSTALL SIDEWALL SPRINKLER PROTECTION IN SECURITY CLOSET 102.
5. SINGLE PIECE STAINLESS STEEL UL / FM APPROVED IN-BUILDING RISER. CAST IRON RISER WITH FITTINGS IS AN ACCEPTABLE ALTERNATE.
6. COORDINATE CONNECTION TO FIRE SERVICE MAIN. TIE-ROD / PIPE CLAMP RESTRAINT WITH CORROSION PROTECTION.
7. CLEARANCE TO BUILDING FOUNDATION IN ACCORDANCE WITH NFPA 13. A MINIMUM ANNULAR CLEARANCE OF 2 INCHES AT THE PIPE PENETRATION THROUGH THE FLOOR SLAB IS REQUIRED FOR SEISMIC PROTECTION.
8. SPRINKLER PIPING IS PROHIBITED ABOVE THIS ELECTRICAL CABINET.

LEGEND

X	KEYED NOTE DESIGNATION
WF	WATERFLOW SWITCH
VT	VALVE TAMPER SWITCH
	SPRINKLER RISER
	FIRE ALARM TERMINAL CABINET
OH2	ORDINARY HAZARD GROUP 2
EH1	ORDINARY HAZARD GROUP 1

PARTITION LEGEND

	NEW UNRATED PARTITION
	NEW / EXISTING 1 HOUR BARRIER

Revisions: Date:

CONSULTANTS

FIRE PROTECTION: FP&C CONSULTANTS KC, LLC — 1330 BURLINGTON STREET, STE. 200, NORTH KANSAS CITY, MO 64116

SECURITY: GRW — 801 CORPORATE DRIVE, LEXINGTON, KY 40503

CIVIL ENGINEER: HODGES ENGINEERING — 231 SHORELINE DRIVE, MOUNTAIN HOME, AR 72653

STRUCTURAL ENGINEER: BERNHARD TME — BUILDING 2, 1 ALLIED DRIVE, SUITE 260, LITTLE ROCK, AR 72202

ARCHITECT/ENGINEER OF RECORD

A/E
JohnsonDanforth & Associates
2200 N. RODNEY PARHAM ROAD
SUITE 210
LITTLE ROCK, AR 72212
501-404-4811
jda@JohnsonDanforth.com
JDA PROJECT #: 2018.001

STAMP

Office of Construction and Facilities Management

VA U.S. Department of Veterans Affairs

Drawing Title: PUMP HOUSE FIRE SUPPRESSION PLAN

Approved: Project Director

Phase: CONSTRUCTION DOCUMENTS

FULLY SPRINKLERED

Project Title: CONSTRUCT NEW WATER STORAGE FACILITY

Location: FAYETTEVILLE, AR

Issue Date: 2022.07.15 | Checked: JAS | Drawn: LBR

Project Number: 564-19-101

Building Number:

Drawing Number: FX101

VA FORM 08 - 6231

SCALE: 1" = 10'

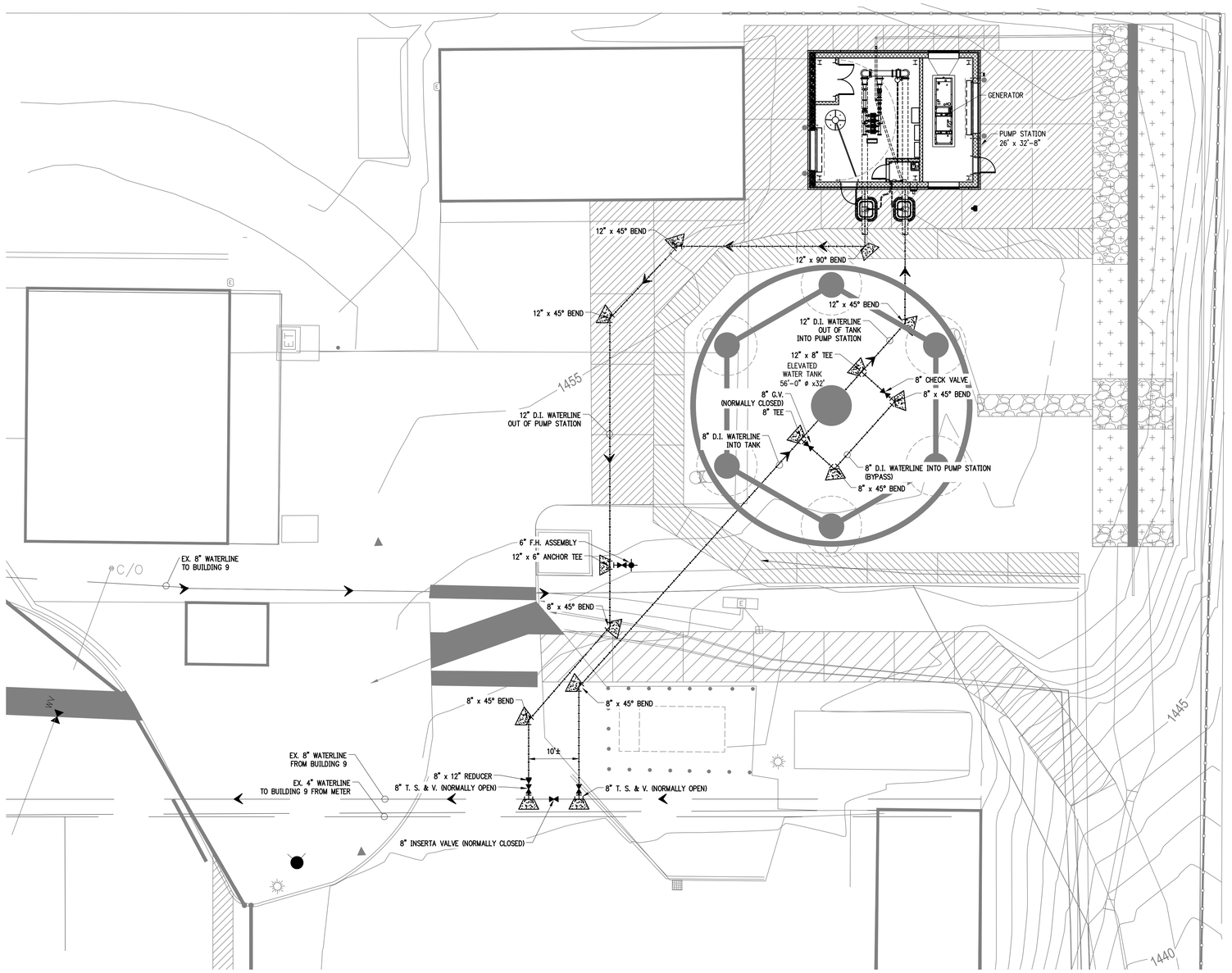

NOTE

PIPING SHOWN HEREON IS FOR REFERENCE ONLY; SEE SHEET CU103

CERTIFICATE OF AUTHORIZATION
CRAFTON, TULL & ASSOCIATES, INC.
No. 109
ARKANSAS ENGINEER

7/13/2022 1:04:32 PM

G:\21704800_VAHOSPITALINFRASTRUCTURE\CIVIL\DWG\21704800_CIVIL.DWG

Revisions: Date:

CONSULTANTS

FPC CONSULTANTS — FIRE PROTECTION
FP&C CONSULTANTS KC, LLC
1330 BURLINGTON STREET, STE. 200
NORTH KANSAS CITY, MO 64116

GRW engineering | architecture | geospatial — SECURITY
GRW
.RPORATE DRIVE
.EXINGTON, KY 40503

Hodges Engineering — CIVIL ENGINEER
HODGES ENGINEERING
231 SHORELINE DRIVE
MOUNTAIN HOME, AR 72653

Bernhard TME Engineering — STRUCTURAL ENGINEER
BERNHARD TME
BUILDING 2, 1 ALLIED DRIVE
SUITE 260
LITTLE ROCK, AR 72202

ARCHITECT/ENGINEER OF RECORD

A/E
JohnsonDanforth & Associates
2200 N. RODNEY PARHAM ROAD
SUITE 210
LITTLE ROCK, AR 72212

501-404-4811
jda@JohnsonDanforth.com

JDA PROJECT #: 2018.001

STAMP

STATE OF ARKANSAS
LICENSED PROFESSIONAL ENGINEER
No.15639
GRANT BRECKENRIDGE
7/19/22

Office of Construction and Facilities Management

VA U.S. Department of Veterans Affairs

Approved: Project Director

Drawing Title: PUMP STATION UTILITY PLAN	Phase: CONSTRUCTION DOCUMENTS	Project Title: CONSTRUCT NEW WATER STORAGE FACILITY	Project Number: 564-19-101
			Building Number: 39
	FULLY SPRINKLERED	Location: FAYETTEVILLE, AR	Drawing Number: PS101
		Issue Date: 2022.07.15 / Checked: MB / Drawn: BN	

VA FORM 08 - 6231

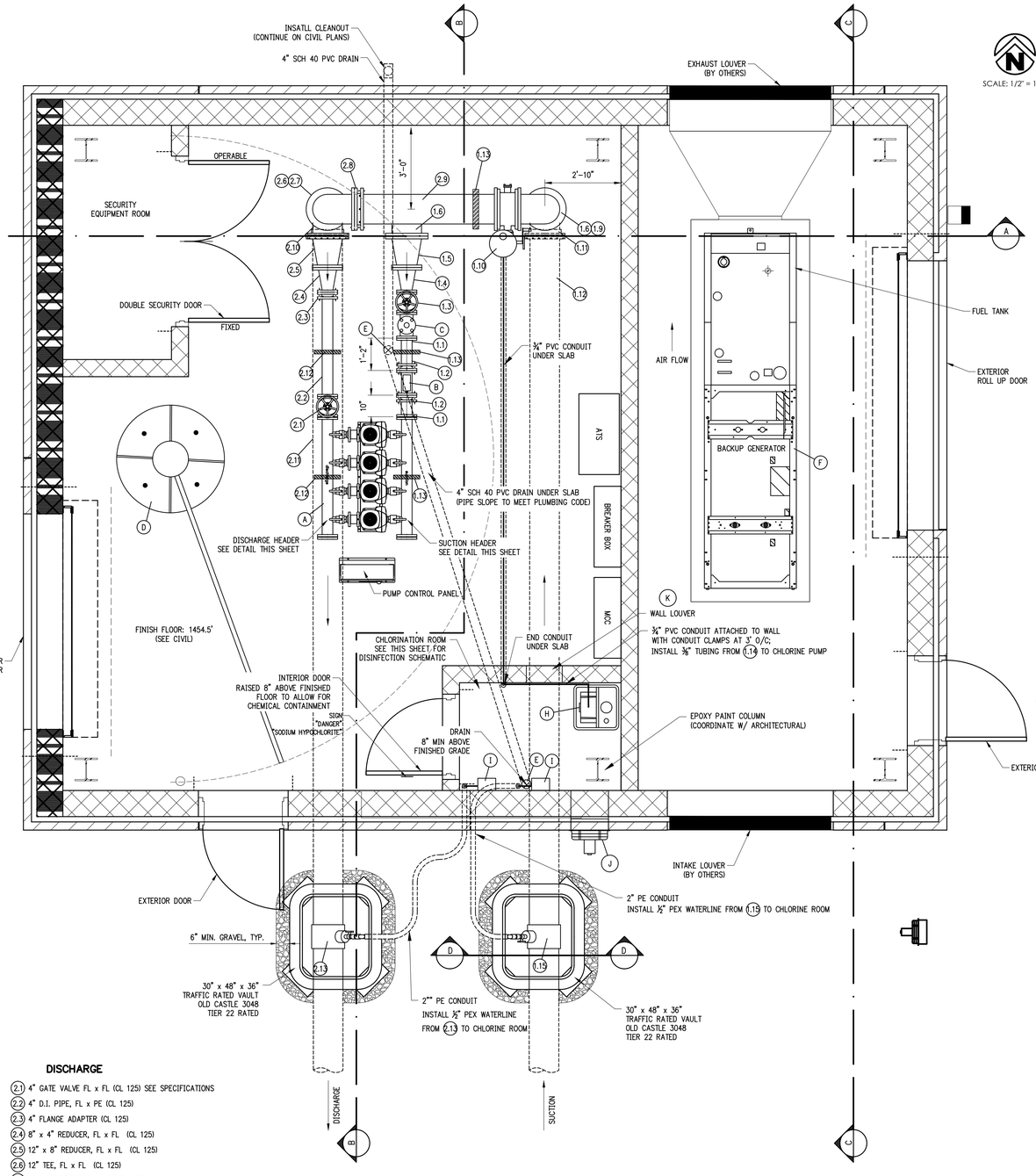

SCALE: 1/2" = 1'-0"

GENERAL NOTES

1. THE EXISTENCE AND LOCATION OF ANY UNDERGROUND UTILITY PIPES OR STRUCTURES SHOWN ON THESE DRAWINGS IS BASED ON A SEARCH OF THE AVAILABLE RECORDS. TO THE BEST OF OUR KNOWLEDGE THERE ARE NO EXISTING UTILITIES EXCEPT AS SHOWN ON THESE DRAWINGS. CRAFTON TULL ASSUMES NO RESPONSIBILITY REGARDING THE ACCURACY OF THE DEPICTED LOCATION(S) OF THE UNDERGROUND FACILITIES ON THESE DRAWINGS. CONTRACTOR IS RESPONSIBLE FOR THE LOCATION AND PROTECTION OF ANY OTHER FACILITIES NOT SHOWN ON THESE DRAWINGS. CONTRACTOR SHALL VERIFY LOCATION OF ALL FACILITIES BEFORE BEGINNING WORK.
2. IN ACCORDANCE WITH GENERALLY ACCEPTED CONSTRUCTION PRACTICES, THE CONTRACTOR WILL BE SOLELY AND COMPLETELY RESPONSIBLE FOR CONDITIONS OF THE JOB SITE INCLUDING SAFETY OF ALL PERSONS AND PROPERTY DURING PERFORMANCE OF THE WORK. THIS REQUIREMENT WILL APPLY CONTINUOUSLY AND NOT BE LIMITED TO NORMAL WORKING HOURS. THE DUTY OF THE ENGINEER TO CONDUCT CONSTRUCTION REVIEW OF THE CONTRACTOR'S PERFORMANCE IS NOT INTENDED TO INCLUDE REVIEW OF THE ADEQUACY OF THE CONTRACTOR'S SAFETY MEASURES IN OR NEAR THE CONSTRUCTION SITE.
3. CONTRACTOR SHALL NOT CAUSE ANY LONG-TERM INCONVENIENCE TO THE PUBLIC, ADJACENT PROPERTY OWNERS, PEDESTRIANS, ETC. DURING CONSTRUCTION OF THIS PROJECT. CONTRACTOR SHALL PROVIDE ACCESS TO ALL ADJACENT PROPERTIES AT ALL TIMES DURING CONSTRUCTION.
4. CONTRACTOR SHALL CONTACT THE COR FOR CLARIFICATION IF A DISCREPANCY OR INCONSISTENCY IS IDENTIFIED IN THE PLANS OR SPECIFICATIONS.
5. CONTRACTOR IS RESPONSIBLE FOR THE DESIGN AND IMPLEMENTATION OF ALL SHEETING, SHORING, AND SPECIAL EXCAVATION MEASURES REQUIRED ON THE PROJECT WHICH ARE NECESSARY TO CONFORM TO OSHA, FEDERAL, STATE AND LOCAL REGULATIONS.
6. ADMINISTRATION OF THESE DOCUMENTS AND/OR DEVIATIONS THEREOF. FURTHERMORE, CRAFTON, TULL & ASSOCIATES, INC. WILL NOT BE RESPONSIBLE FOR ANY EFFECTS THAT ANY CHANGES TO THESE DOCUMENTS MAY HAVE ON ANY RELATED TRADES, CONSTRUCTION SEQUENCES, OR OPERATION OF THE COMPLETED PROJECT EXCEPT AS SPECIFICALLY NOTED IN THE AGREEMENT BETWEEN CRAFTON, TULL & ASSOCIATES AND THE OWNER.
7. ENERGIZED ELECTRICAL LINE SAFETY, WARNINGS, AND ADVANCED NOTICES: ALL OWNERS, GENERAL CONTRACTORS, AND SUBCONTRACTORS ASSOCIATED WITH THIS PROJECT SHALL BE RESPONSIBLE FOR FAMILIARIZING THEMSELVES WITH, COMPLYING WITH, AND THE ENFORCEMENT OF ARKANSAS CODES AR ST § 11-5-307 AND § AR ST 11-5-308 AND ANY OTHER CURRENT STATE CODES PERTAINING TO ADVANCE NOTICE REQUIREMENTS AND FOR SAFETY OF ALL PERSONNEL, INCLUDING THE GENERAL PUBLIC, PERTAINING TO ANY WORK, MOVEMENT, AND ACTIVITY IN CLOSE PROXIMITY TO ANY ENERGIZED ELECTRICAL LINE.

NOTE:

INSTALL THE SAMPLE FLOW REGULATOR (CONSTANT HEAD DEVICE) 24 INCHES ABOVE THE INSTRUMENT

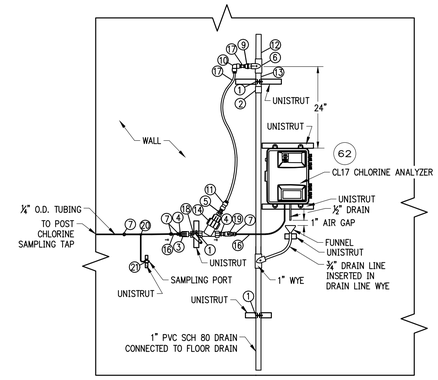

CL-17 CHLORINE ANALYZER W/ SAMPLING CONDITIONING KIT

SCALE: NTS

SAMPLE CONDITIONING PARTS LIST			
ITEM	DESCRIPTION	QTY	CATALOG NUMBER
1	CLAMP, CONDUIT HANGER, 1-INCH	8	47349-00
2	COUPLING, 1-INCH, SCH 40, PVC PIPE	2	54175-00
3	COUPLING, 1/2-INCH FPT X 1/2 FPT PVC	2	54176-00
4	FITTING, REDUCER BUSHING, PVC, HEX	4	23002-00
5	FITTING, STEM ADAPTER, 1/2-INCH O.D., 1/4 NPT	2	54180-00
6	FITTING, TEE, 1-INCH X 1-INCH	2	46622-00
7	FITTING, TUBE, CONNECTOR, MALE (1/4-INCH TUBING)	5	51246-00
8	3/8" x 1/4 UNION REDUCER	1	
9	FITTING, TUBE, 1/2-INCH O.D. Z 1/2-INCH MALE NPT	2	54178-00
10	FITTING, TUBE, 1/2-INCH O.D., UNION ELBOW	2	54179-00
11	FITTING, TUBE, 1/2-INCH O.D., UNION STRAIGHT	2	54181-00
12	PIPE, PRE-CUT DRAIN, 1-INCH DIAMETER, PVC	2	51239-00
13	PIPE, DRAIN, CLEAR	2	54171-00
14	STRAINER, Y-BODY	2	54183-00
	FILTER, 40-MESH SCREEN (PROVIDED WITH STRAINER AND IN MAINTANCE KIT, 55165-00	2	54184-00
15	TELFON, THREAD TAPE, 1/4-INCH WIDE	2	70608-24
16	TUBING, POLYETHYLENE, 0.250 O.D., 0.040 W, BLACK	30 FEET	30161-00
17	TUBING, POLYETHYLENE, 0.500 O.D., 0.062 W, BLACK	20 FEET	51159-00
18	VALVE, BALL, PVC, 1/2 NPT, PVC	2	54177-00
19	VALVE, BALL, PVC, 1/4 NPT, PVC	2	51395-00
20	FITTING, TEE, 1/4-INCH X 1/4-INCH	2	
21	VALVE, PETCOCK, 1/4-INCH	2	

GENERAL NOTES

1. ALL FITTINGS TO BE SAME SCHEDULE AS PIPE.
2. ALL FITTINGS TO BE SOCKET WELD UNLESS OTHERWISE NOTED.
3. SIGNS TO BE 7" x 10" HIGH PERFORMANCE POLYESTER AS MANUFACTURED BY BRADY WORLDWIDE INC OR EQUAL.
4. CONTRACTOR SHALL PROVIDE ALL PIPING AND FITTINGS NECESSARY TO COMPLETE THE INSTALLATION OF ALL CHEMICAL FEED EQUIPMENT WHETHER OR NOT SPECIFICALLY CALLED OUT
5. CONTRACTOR SHALL COLOR CODE & LABEL ALL CHEMICAL LINE/TUBING.
6. OWNER SHALL PROVIDE ALL STARTUP BULK CHEMICALS.

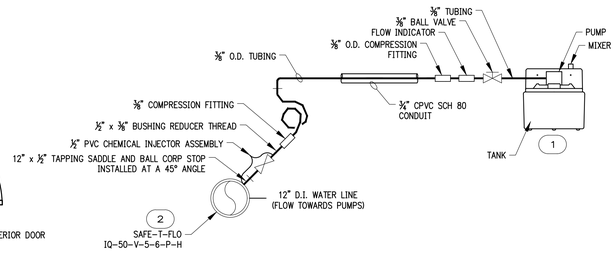

DISINFECTION SCHEMATIC

N.T.S.

DISINFECTION GENERAL NOTES

1. ALL FITTINGS TO BE SAME SCHEDULE AS PIPE.
2. WARNING SIGNS TO BE 7" x 10" HIGH PERFORMANCE POLYESTER AS MANUFACTURED BY BRADY WORLDWIDE INC OR EQUAL.
3. CONTRACTOR SHALL PROVIDE ALL PIPING AND FITTINGS NECESSARY TO COMPLETE THE INSTALLATION OF ALL CHEMICAL FEED EQUIPMENT WHETHER OR NOT SPECIFICALLY CALLED OUT.
4. CONTRACTOR SHALL COLOR CODE AND LABEL ALL CHEMICAL LINES/TUBING.
5. OWNER SHALL PROVIDE ALL START UP BULK CHEMICALS
6. CONTRACTOR TO PRE TEST ALL CHEMICAL SYSTEMS WITH WATER PRIOR TO INTRODUCTION OF CHEMICAL ELEMENTS.
7. TUBING AND CONDUIT TO BE MOUNTED ON WALLS WITH STAINLESS STEEL CUSHIONED HOSE CLAMPS AND TAPCON SCREWS.

EQUIPMENT TABLE

NO.	QTY	SIZE (IN.)	ITEM DESCRIPTION	PURPOSE	
1.	1	–	30 GAL VERTICAL STORAGE TANK W/ MIXER & PERISTALTIC METERING PUMP	PRIMARY BLEACH/DISINFECTION	SEE CONTRACT DOCUMENTS
2.	1	½"	SAF-T-FLO INJECTOR IQ-50-V-5-6-P-H	CHEMICAL INJECTION	SEE CONTRACT DOCUMENTS

PIPING LEGEND

SUCTION

(1.1) 4" D.I. PIPE, FL x PE (CL 125)
(1.2) 4" FLANGE ADAPTER (CL 125)
(1.3) 4" GATE VALVE FL x FL (CL 125) SEE SPECIFICATIONS
(1.4) 8" x 4" REDUCER, FL x FL (CL 125)
(1.5) 12" x 8" REDUCER, FL x FL (CL 125)
(1.6) 12" x 90° BEND, FL x FL (CL 125)
(1.7) 12" FLANGE ADAPTER (CL 125)
(1.8) 12" D.I. PIPE, FL x PE (CL 125)
(1.9) 12" TEE, FL x FL (CL 125)
(1.10) 12" BUTTERFLY VALVE WITH ELECTRIC ACTUATOR FL x FL (CL 125) (NORMALLY CLOSED) SEE SPECIFICATIONS
(1.11) 12" x 90° BEND, MJ x MJ
(1.12) 12" D.I. PIPE, PE x PE (CL 125)
(1.13) PIPE STAND (SEE DETAIL THIS SHEET) – 2 REQ'D
(1.14) 1/2" TAP W/ BALL CORP STOP
(1.15) 12" x 1" TAPPING SADDLE 1" PVC SCH 80 MALE ADAPTOR SPIG X MIPT
1" PVC SCH 80 UNION BALL VALVE – SOC X SOC
1" x ½" BUSHING REDUCER SPIG X FIPT
½" O.D. x ½" NPT COMPRESSION FITTING

DISCHARGE

(2.1) 4" GATE VALVE FL x FL (CL 125) SEE SPECIFICATIONS
(2.2) 4" D.I. PIPE, FL x PE (CL 125)
(2.3) 4" FLANGE ADAPTER (CL 125)
(2.4) 8" x 4" REDUCER, FL x FL (CL 125)
(2.5) 12" x 8" REDUCER, FL x FL (CL 125)
(2.6) 12" TEE, FL x FL (CL 125)
(2.7) 12" x 90° BEND, FL x FL (CL 125)
(2.8) 12" FLANGE ADAPTER (CL 125)
(2.9) 12" D.I. PIPE, FL x PE (CL 125)
(2.10) 12" x 90° BEND, MJ x MJ
(2.11) 12" D.I. PIPE, PE x PE (CL 125)
(2.12) PIPE STAND (SEE DETAIL THIS SHEET) – 2 REQ'D
(2.13) 12" x 1" TAPPING SADDLE 1" PVC SCH 80 MALE ADAPTOR SPIG X MIPT
1" PVC SCH 80 UNION BALL VALVE – SOC X SOC
1" x ½" BUSHING REDUCER SPIG X FIPT
½" O.D. x ½" NPT COMPRESSION FITTING

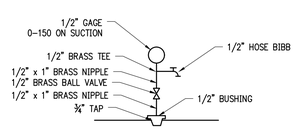

SUCTION HEADER

SCALE: NTS

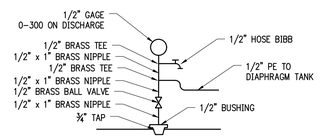

DISCHARGE HEADER

SCALE: NTS

EQUIPMENT SCHEDULE

(A.) PUMP PACKAGE:
GRUNDFOS : HYDRO MPC E 4CRE15-2
5 H.P. x 4 PUMPS, 460V 3ø, 4" HEADERS, WITH 20' CONTROL & POWER CABLE AND PRE-FAB PUMP BASE.

(B.) WATER METER:
4" BADGERMETER M-SERIES M2000 ELECTROMAGNETIC FLOW METER FLANGED (CL 125)

(C.) BASKET STRAINER:
WATTS SERIES 97FB-CIB
4" CAST IRON, SIMPLEX, BASKET STRAINER, FLANGED

(D.) FLOOR MOUNTED JIB CRANE:
CRANE: WALLACE PRODUCTS MODEL HS2-16-12B (2 TON)
HOIST: WALLACE PRODUCTS MODEL 5-414-15 (2 TON)
TROLLEY: WALLACE PRODUCTS MODEL 70-2818 (2 TON)

(E.) FLOOR DRAIN:
4" WADE MODEL 1100-A6-1-4NH = TOP EL. 1454.5'
WITH 'P' TRAP

(F.) BACKUP GENERATOR
KOHLER 50 REOZK, 50 kW DIESEL GENERATOR
FUEL TANK – 535 GALLON DIESEL TANK

(G.) DANFOSS FLOMATIC MINIAIR PRESSURE AIR RELEASE VALVE
PART NO. 6501, ½" INLET x ½" OUTLET

(H.) CHLORINE
PUMP:
BLUE-WHITE INDUSTRIES STAR III
WITH A-100N PERISTALTIC PUMP
FLOW INDICATOR:
BLUE-WHITE INDUSTRIES FLOW INDICATOR
MIXER:
NOVATECH J64027

(I.) CHLORINE ANALYZER
CHEMTRAK HA2 – FC1

(J.) EXHAUST:
12" EXHAUST FAN:
CANARM AX12-1VHE, 115V 1ø, 1/15 HP
LINE VOLTAGE THERMOSTAT:
COLUMBUS ELECTRIC (GRAINGER ITEM 2E158)

(K.) WALL LOUVER:
LLOYD INDUSTRIES INC.
BACK DRAFT DAMPER
INSTALLED 6'-0" ABOVE FINISH FLOOR AND ALL VOIDS IN BLOCK GROUTED

CERTIFICATE OF AUTHORIZATION
CRAFTON, TULL & ASSOCIATES, INC.
No. 109
ARKANSAS ENGINEER

Revisions: Date:

CONSULTANTS

FP&C CONSULTANTS

FIRE PROTECTION
FP&C CONSULTANTS KC, LLC
1330 BURLINGTON STREET, STE. 200
NORTH KANSAS CITY, MO 64116

GRW engineering | architecture | geospatial

SECURITY
GRW
.IRPORATE DRIVE
.EXINGTON, KY 40503

Hodges Engineering

CIVIL ENGINEER
HODGES ENGINEERING
231 SHORELINE DRIVE
MOUNTAIN HOME, AR 72653

Bernhard TME Engineering

STRUCTURAL ENGINEER
BERNHARD TME
BUILDING 2, 1 ALLIED DRIVE
SUITE 260
LITTLE ROCK, AR 72202

ARCHITECT/ENGINEER OF RECORD

A/E
JohnsonDanforth & Associates
2200 N. RODNEY PARHAM ROAD
SUITE 210
LITTLE ROCK, AR 72212

501-404-4811
jda@JohnsonDanforth.com

JDA PROJECT #: 2018.001

STAMP

STATE OF ARKANSAS
LICENSED PROFESSIONAL ENGINEER
No. 15639
GRANT BRECKENRIDGE
7/15/22

Office of Construction and Facilities Management

VA U.S. Department of Veterans Affairs

Drawing Title: **PUMP STATION LAYOUT**

Approved: Project Director

Phase: **CONSTRUCTION DOCUMENTS**

FULLY SPRINKLERED

Project Title: **CONSTRUCT NEW WATER STORAGE FACILITY**

Location: **FAYETTEVILLE, AR**

Issue Date: 2022.07.15 | Checked: MB | Drawn: BN

Project Number: **564-19-101**

Building Number: **39**

Drawing Number: **PL101**

G:\21704800_VAHCSPITALINFRASTRUCTURE\CIVIL\DWG\VA_PUMP_STATION.DWG

7/13/2022 1:04:48 PM

VA FORM 08 - 6231

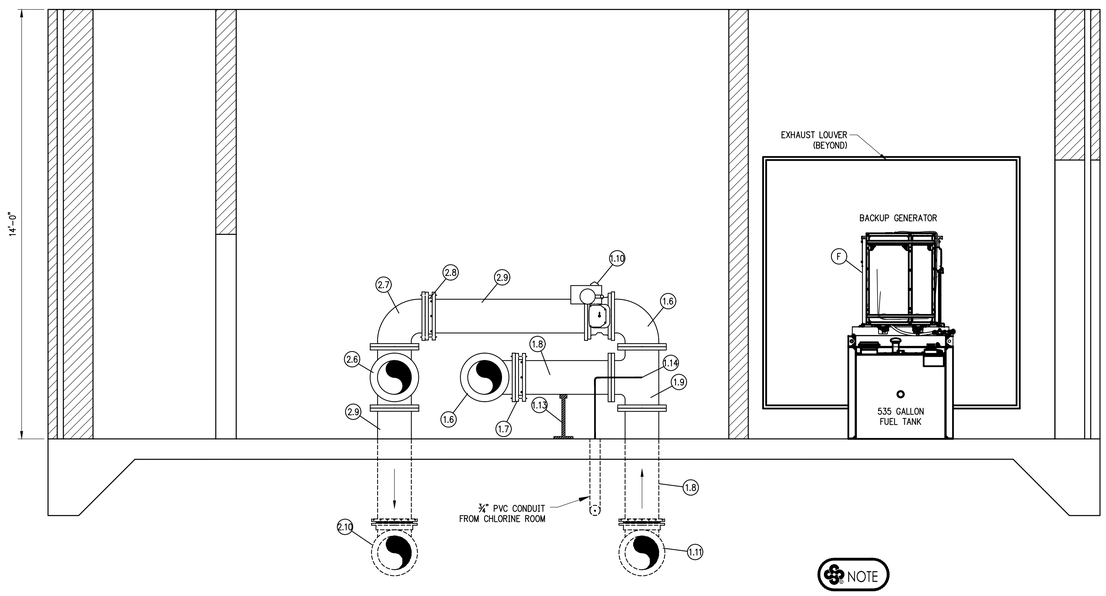

SECTION A-A
SCALE: 1/2" = 1'-0"

NOTE

1. REFER TO PIPING SCHEDULE & EQUIPMENT SCHEDULE ON SHEET PL101

NOTES

1. CONTRACTOR TO FIELD VERIFY DIMENSIONS BEFORE CONSTRUCTION OF PUMP STAND
2. ALL SEAMS TO BE WELDED CONTINUOUS GROUND SMOOTH

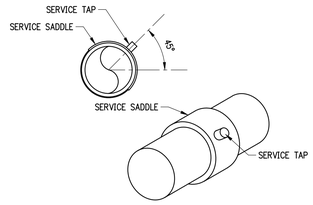

SAMPLE TAP ORIENTATION DETAIL
SCALE: NTS

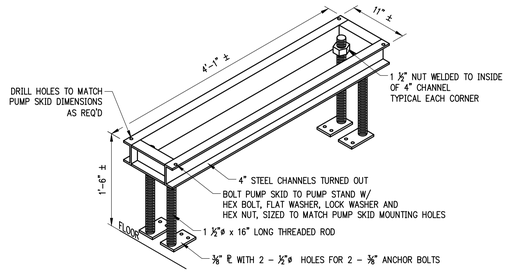

PUMP STAND DETAIL
SCALE: 1" = 1'-0"

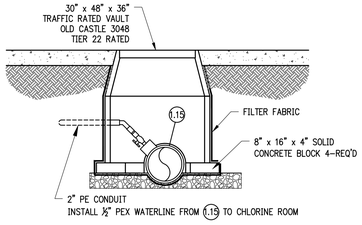

SECTION D-D
SCALE: 1/2" = 1'-0"

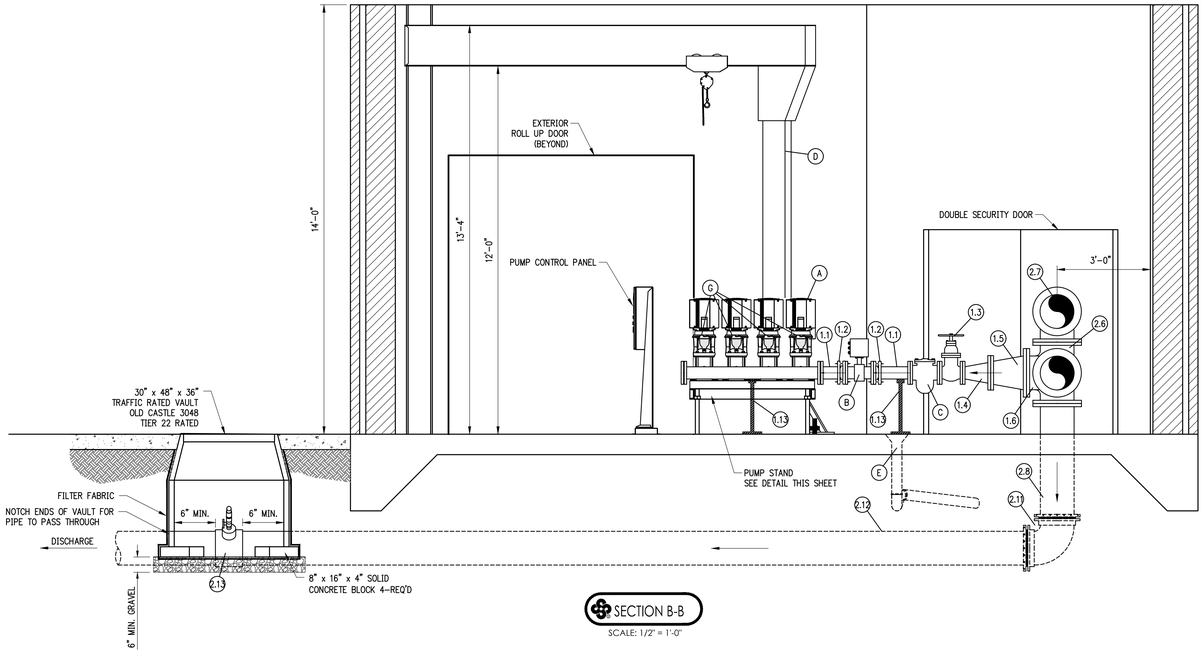

SECTION B-B
SCALE: 1/2" = 1'-0"

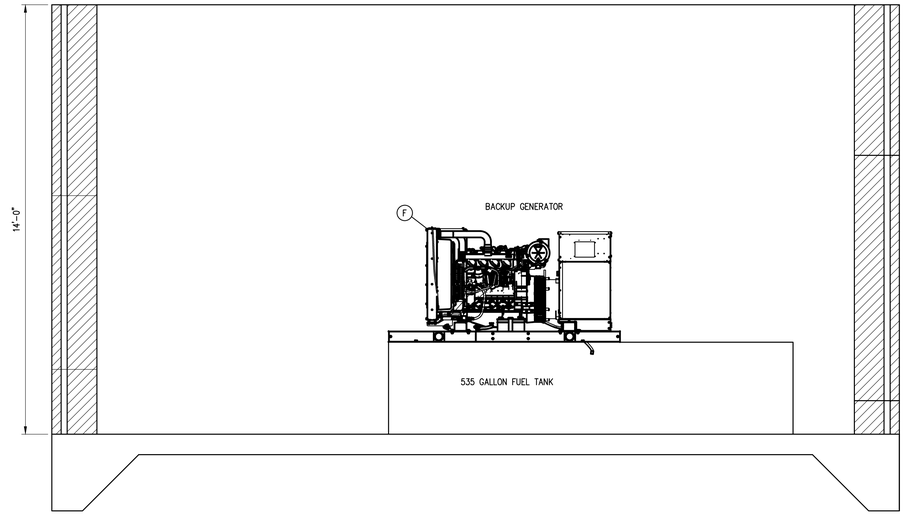

SECTION C-C
SCALE: 1/2" = 1'-0"

CERTIFICATE OF AUTHORIZATION
CRAFTON, TULL & ASSOCIATES, INC.
No. 109
ARKANSAS ENGINEER

7/13/2022 1:04:50 PM

G:\21704800_VAHOSPITALINFRASTRUCTURE\CIVIL\DWG\VIA_PUMP_STATION.DWG

Revisions: Date:

VA FORM 08 - 6231

CONSULTANTS

FP&C CONSULTANTS

FIRE PROTECTION
FP&C CONSULTANTS KC, LLC
1330 BURLINGTON STREET, STE. 200
NORTH KANSAS CITY, MO 64116

GRW engineering | architecture | geospatial

SECURITY
GRW
RPORATE DRIVE
EXINGTON, KY 40503

Hodges Engineering — Strategies, Services & Solutions

CIVIL ENGINEER
HODGES ENGINEERING
231 SHORELINE DRIVE
MOUNTAIN HOME, AR 72653

Bernhard TME Engineering

STRUCTURAL ENGINEER
BERNHARD TME
BUILDING 2, 1 ALLIED DRIVE
SUITE 260
LITTLE ROCK, AR 72202

ARCHITECT/ENGINEER OF RECORD

A/E
JohnsonDanforth & Associates
2200 N. RODNEY PARHAM ROAD
SUITE 210
LITTLE ROCK, AR 72212

501-404-4811
jda@JohnsonDanforth.com

JDA PROJECT #: 2018.001

STAMP

STATE OF ARKANSAS — LICENSED PROFESSIONAL ENGINEER — No.15639 — GRANT BRECKENRIDGE — 7/13/22

Office of Construction and Facilities Management

VA U.S. Department of Veterans Affairs

Drawing Title: PUMP STATION SECTION	Phase: CONSTRUCTION DOCUMENTS	Project Title: CONSTRUCT NEW WATER STORAGE FACILITY	Project Number: 564-19-101
			Building Number: 39
Approved: Project Director	FULLY SPRINKLERED	Location: FAYETTEVILLE, AR	Drawing Number: PL301
		Issue Date: 2022.07.15 — Checked: MB — Drawn: BN	

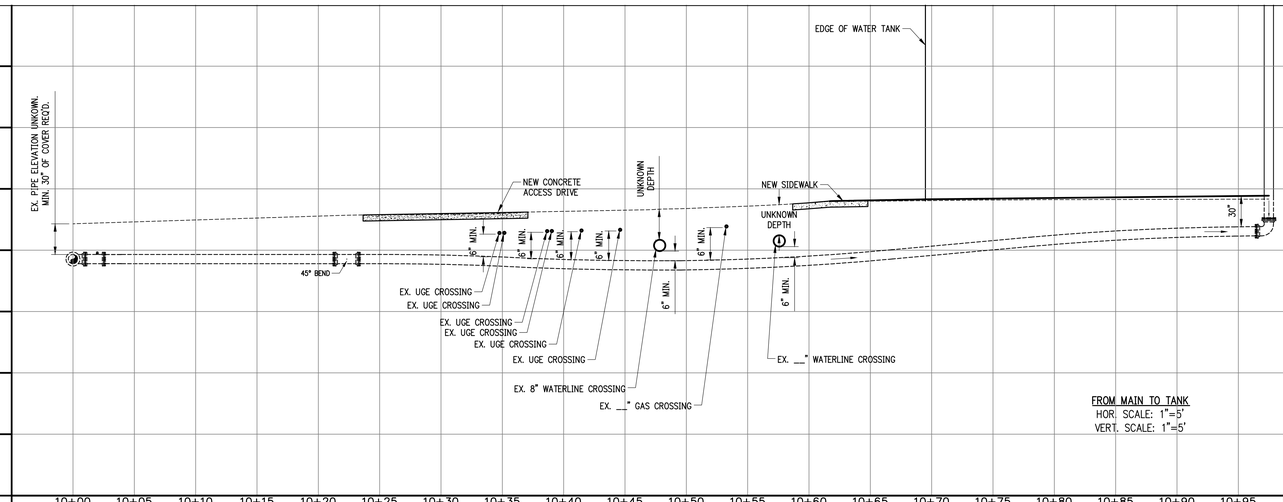

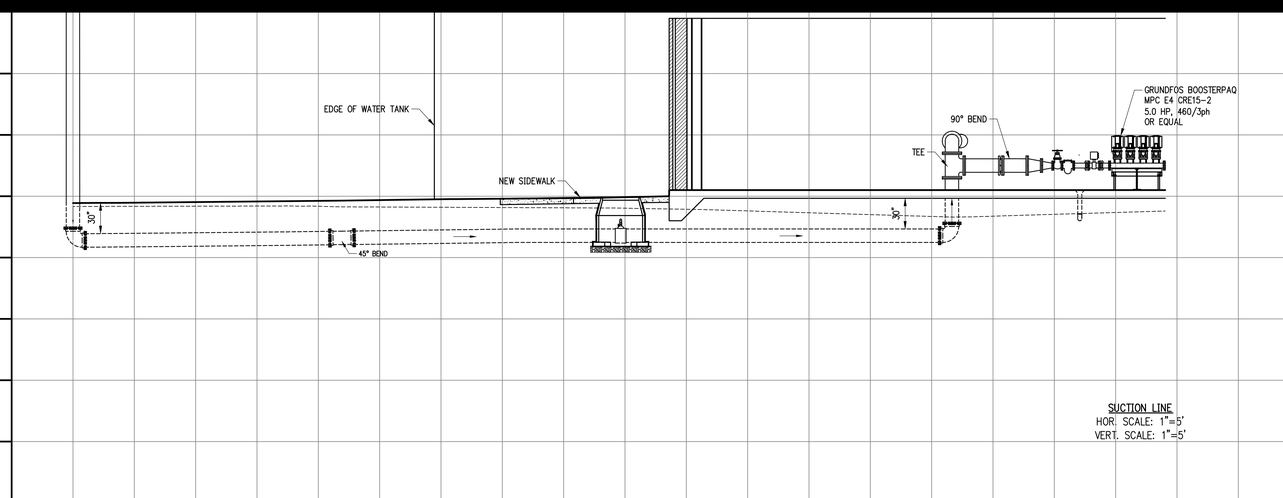

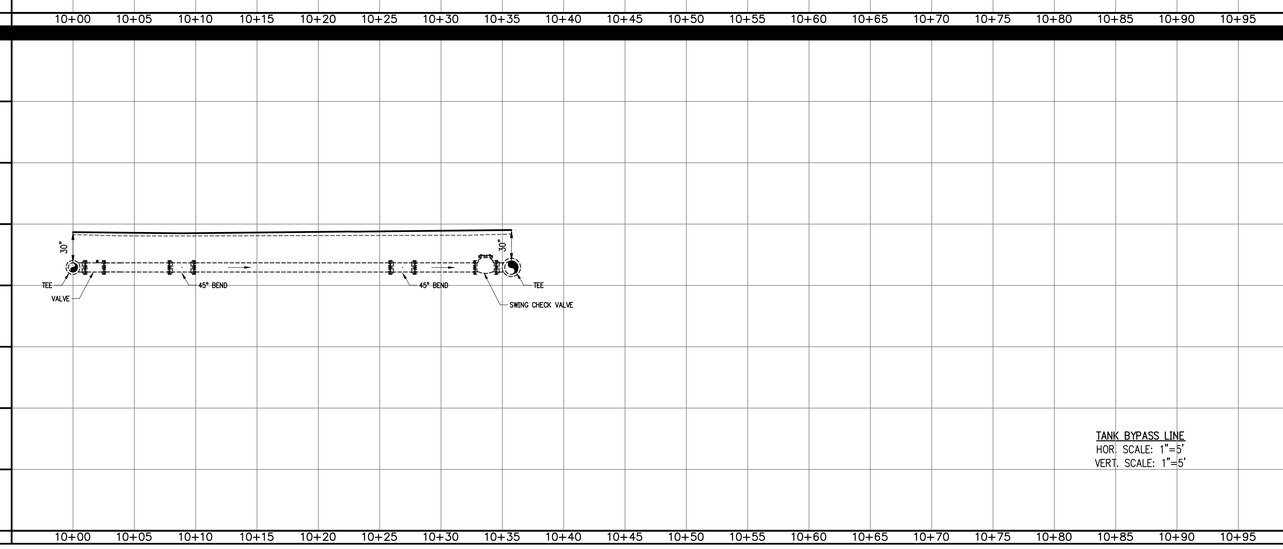

NOTE

PIPING SHOWN HEREON IS FOR REFERENCE ONLY; SEE SHEET CU103

CERTIFICATE OF AUTHORIZATION
CRAFTON, TULL & ASSOCIATES, INC.
No. 109
ARKANSAS ENGINEER

7/13/2022 1:08:15 PM

G:\21704800_VAHOSPITALINFRASTRUCTURE\CIVIL\DWG\VA_PUMP_STATION_SITE PIPING SECTIONS.DWG

Revisions: Date:

CONSULTANTS

FPC CONSULTANTS — FIRE PROTECTION
FP&C CONSULTANTS KC, LLC
1330 BURLINGTON STREET, STE. 200
NORTH KANSAS CITY, MO 64116

GRW — SECURITY
GRW
...RPORATE DRIVE
...EXINGTON, KY 40503

Hodges Engineering — CIVIL ENGINEER
HODGES ENGINEERING
231 SHORELINE DRIVE
MOUNTAIN HOME, AR 72653

Bernhard TME — STRUCTURAL ENGINEER
BERNHARD TME
BUILDING 2, 1 ALLIED DRIVE
SUITE 260
LITTLE ROCK, AR 72202

ARCHITECT/ENGINEER OF RECORD

A/E
JohnsonDanforth & Associates
2200 N. RODNEY PARHAM ROAD
SUITE 210
LITTLE ROCK, AR 72212

501-404-4811
jda@JohnsonDanforth.com

JDA PROJECT #: 2018.001

STAMP

STATE OF ARKANSAS LICENSED PROFESSIONAL ENGINEER No. 15639 GRANT BRECKENRIDGE
7/19/22

Office of Construction and Facilities Management

VA U.S. Department of Veterans Affairs

Approved: Project Director

Drawing Title	SITE PIPING SECTIONS
Phase	CONSTRUCTION DOCUMENTS
Project Title	CONSTRUCT NEW WATER STORAGE FACILITY
Project Number	564-19-101
Building Number	39
Location	FAYETTEVILLE, AR
Drawing Number	PL302
Issue Date	2022.07.15
Checked	MB
Drawn	BN

FULLY SPRINKLERED

VA FORM 08 - 6231

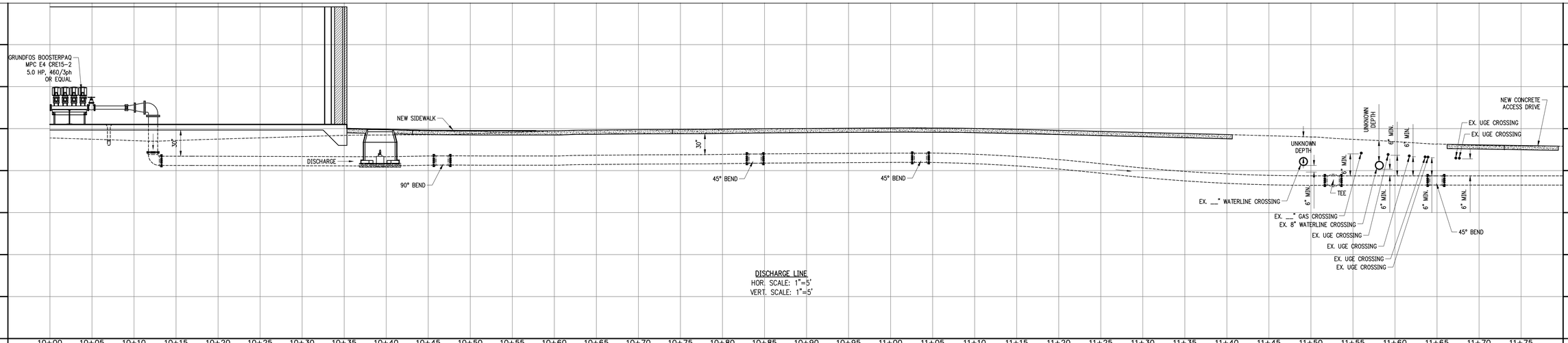

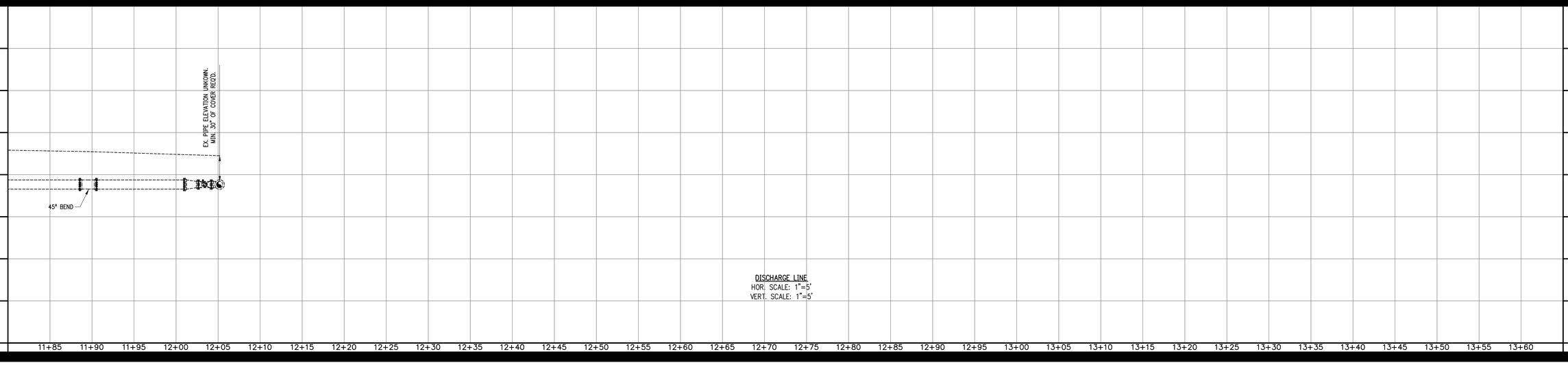

NOTE

PIPING SHOWN HEREON IS FOR REFERENCE ONLY; SEE SHEET CU103

CERTIFICATE OF AUTHORIZATION
CRAFTON, TULL & ASSOCIATES, INC.
No. 109
ARKANSAS ENGINEER

7/13/2022 1:08:19 PM

G:\21704800_VAHOSPITALINFRASTRUCTURE\CIVIL\DWG\VA_PUMP_STATION_SITE PIPING SECTIONS.DWG

Revisions: Date:

CONSULTANTS

FPC CONSULTANTS
FIRE PROTECTION
FP&C CONSULTANTS KC, LLC
1330 BURLINGTON STREET, STE. 200
NORTH KANSAS CITY, MO 64116

GRW engineering | architecture | geospatial
SECURITY
GRW
...RPORATE DRIVE
...EXINGTON, KY 40503

Hodges Engineering
CIVIL ENGINEER
HODGES ENGINEERING
231 SHORELINE DRIVE
MOUNTAIN HOME, AR 72653

Bernhard TME Engineering
STRUCTURAL ENGINEER
BERNHARD TME
BUILDING 2, 1 ALLIED DRIVE
SUITE 260
LITTLE ROCK, AR 72202

ARCHITECT/ENGINEER OF RECORD

A/E
JohnsonDanforth & Associates
2200 N. RODNEY PARHAM ROAD
SUITE 210
LITTLE ROCK, AR 72212

501-404-4811
jda@JohnsonDanforth.com

JDA PROJECT #: 2018.001

STAMP
STATE OF ARKANSAS
LICENSED PROFESSIONAL ENGINEER
No. 15639
GRANT BRECKENRIDGE
7/19/22

Office of Construction and Facilities Management

VA U.S. Department of Veterans Affairs

Approved: Project Director

Drawing Title
SITE PIPING SECTIONS

Phase
CONSTRUCTION DOCUMENTS

FULLY SPRINKLERED

Project Title
CONSTRUCT NEW WATER STORAGE FACILITY

Location
FAYETTEVILLE, AR

Issue Date 2022.07.15
Checked MB
Drawn BN

Project Number 564-19-101
Building Number 39
Drawing Number PL303

VA FORM 08 - 6231

HVAC LEGEND

ABBREVIATION OR SYMBOL	DESCRIPTION
AHU	AIR HANDLING UNIT
AFF	ABOVE FINISHED FLOOR
AP	ACCESS PANEL
BHP	BRAKE HORSEPOWER
BTUH	BRITISH THERMAL UNIT PER HOUR
CFM	CUBIC FEET PER MINUTE
CRAC	COMPUTER ROOM AIR CONDITIONING UNIT
D	DRAIN
DB	DRY BULB TEMPERATURE
DN	DOWN
EA	EXHAUST AIR
EAT	ENTERING AIR TEMPERATURE OF THE COIL
ESP	EXTERNAL STATIC PRESSURE
EWT	ENTERING WATER TEMPERATURE
FCU	FAN COIL UNIT
FLR	FLOOR
FO	FLAT OVAL
FPM	FEET PER MINUTE (VELOCITY)
GPM	GALLONS PER MINUTE
HP	HORSEPOWER
KW	KILOWATT
LAT	LEAVING AIR TEMPERATURE OF THE COIL
LWT	LEAVING WATER TEMPERATURE
MAU	MAKE-UP AIR UNIT
MAX	MAXIMUM
MIN	MINIMUM
MHP	MOTOR HORSEPOWER
NTS	NOT TO SCALE
OSA	OUTSIDE AIR
PSI	POUNDS PER SQUARE INCH
RA	RETURN AIR
RH	RELATIVE HUMIDITY
RPM	REVOLUTION PER MINUTE
RTU	ROOF TOP (AIR CONDITIONING) UNIT
SA	SUPPLY AIR
SP	STATIC PRESSURE
TYP	TYPICAL
VAV	VARIABLE AIR VOLUME
WB	WET BULB TEMPERATURE
XFR	TRANSFER AIR
'	FEET
"	INCHES
ø	ROUND DUCT
⌀	OVAL DUCT

ABBREVIATION OR SYMBOL	DESCRIPTION
	NEW EQUIPMENT
	EXISTING EQUIPMENT TO REMAIN
18/12	RECTANGULAR DUCT WITH DUCT SIZE TAG
20ø	ROUND DUCT WITH DUCT SIZE TAG
20/14⌀	OVAL DUCT WITH DUCT SIZE TAG
24/24 SA	SUPPLY DUCT UP
24/24 SA	SUPPLY DUCT DOWN
24/24 RA	RETURN DUCT UP
24/24 RA	RETURN DUCT DOWN
24/24 EA	EXHAUST DUCT UP
24/24 EA	EXHAUST DUCT DOWN
DETAIL/SECTION NUMBER; 2 / M1.1; SHEET NUMBER	DETAIL/SECTION DESIGNATION
	FLEXIBLE DUCT CONNECTION
F (1), M (3), S (2), C (4)	(1) FIRE DAMPER (2) SMOKE DAMPER (3) MOTORIZED DAMPER (4) CONTROL DAMPER
T VAV-2 S	THERMOSTAT OR SENSOR. (SUBSCRIPT DESIGNATES CONTROLLED EQUIPMENT)
(1), SD (2)	(1) BALANCING DAMPER (2) SMOKE DETECTOR
2	KEYED NOTE
250	BALANCING DAMPER, SET TO INDICATED CFM

* NOT ALL SYMBOLS MAY APPLY TO THIS PROJECT

GENERAL NOTES:

1. REFER TO SPECIFICATIONS AND PROJECT MANUAL FOR ADDITIONAL INFORMATION AND REQUIREMENTS.
2. REFER TO ALL PROJECT DRAWINGS FOR DETAILS OF CONSTRUCTION AND INSTALLATION REQUIREMENTS.
3. PRIOR TO BID CONTRACTOR SHALL BECOME THOROUGHLY FAMILIAR WITH THE REQUIREMENTS OF THESE NOTES AS WELL AS OTHER NOTES SHOWN ON THE CONTRACT DOCUMENTS.
4. THESE DRAWINGS REFLECT A SYSTEM DESIGNED AROUND SPECIFIC REFERENCE PRODUCTS (SEE SCHEDULES), THE SELECTION OF WHICH HAS INFLUENCED THE DESIGNS OF OTHER TRADES. IF SUBSTITUTE MANUFACTURERS, SIZES, OR MODEL NUMBERS ARE BID, OR SUBMITTED, IT IS THE RESPONSIBILITY OF THE CONTRACTOR TO COORDINATE ALL DIFFERENCES PRIOR TO BID. ALL COSTS OF ALL TRADES ASSOCIATED WITH THE SUBSTITUTION SHALL BE INCLUDED IN THE BID.
5. COORDINATION OF ALL MODIFICATIONS TO EACH DISCIPLINE WHICH RESULT FROM SUBSTITUTION OF EQUIPMENT OR MATERIALS SHALL BE THE RESPONSIBILITY OF THE CONTRACTOR. SUBSTITUTIONS WHICH ARE INSTALLED AND SUBSEQUENTLY ARE PROVEN UNSATISFACTORY BY OWNER AND/OR ENGINEER, WITHIN THE WARRANTY PERIOD, SHALL BE REMOVED COMPLETELY BY THE CONTRACTOR AND REPLACED WITH THE ORIGINAL DESIGN OR CORRECTED AS DIRECTED BY THE ENGINEER WITHOUT ADDITIONAL COST TO THE OWNER.
6. ALL DRAWINGS ARE DIAGRAMMATIC AND INDICATE THE GENERAL ARRANGEMENTS OR GEOMETRICAL RELATIONSHIPS OF EQUIPMENT AND SERVICES. THEY ARE NOT INTENDED TO SPECIFY OR SHOW EVERY OFFSET, SEQUENCE, DEVICE, OPTION, FITTING, OR COMPONENT.
7. INFORMATION AND COMPONENTS SHOWN ON RISER DIAGRAMS OR DETAILS, BUT NOT SHOWN ON PLANS, AND VICE VERSA, SHALL BE PROVIDED AS IF EXPRESSLY REQUIRED BY BOTH.
8. CONTRACTOR SHALL NOT SCALE DRAWINGS. DRAWINGS SPECIFIC TO THIS DISCIPLINE DO NOT LIMIT THE RESPONSIBILITY OF WORK REQUIRED BY THE CONTRACT DOCUMENTS.
9. UNLESS NOTED OTHERWISE, THE INDICATION AND/OR DESCRIPTION OF ANY ITEM, IN THE DRAWINGS OR SPECIFICATIONS CARRIES WITH IT THE INSTRUCTION TO FURNISH AND INSTALL THE ITEM.
10. EXACT LOCATIONS OF ALL EQUIPMENT, ROOF CURBS, DUCTS, DIFFUSERS, AND PIPING. SHALL BE COORDINATED WITH OTHER TRADES. CEILING MOUNTED SPRINKLER, LIGHTING, AND ELECTRICAL REQUIREMENTS TAKE PRECEDENCE OVER CEILING MOUNTED MECHANICAL REQUIREMENTS. SEE ARCHITECTURAL REFLECTED CEILING PLANS FOR CEILING GRID AND LIGHTING LAYOUT FOR COORDINATION OF FINAL DIFFUSER LOCATIONS.
11. SEE ARCHITECTURAL AND STRUCTURAL DRAWINGS FOR BUILDING DETAILS AND DIMENSIONS. COORDINATE PLACEMENT OF MECHANICAL SYSTEMS WITH ARCHITECTURAL AND STRUCTURAL TRADES.
12. CONTRACTOR SHALL BE RESPONSIBLE FOR COORDINATING ALL WORK WITH THAT OF OTHER TRADES. REFER TO ARCHITECTURAL, STRUCTURAL, ELECTRICAL, AND OTHER DRAWINGS FOR COMPLETE INFORMATION PRIOR TO BID.
13. ALL MECHANICAL CONSTRUCTION DETAILS SHALL BE AS SHOWN AND AS REQUIRED TO MAINTAIN "UL" ASSEMBLY RATINGS AS SHOWN ON ARCHITECTURAL SHEETS. SEAL AROUND ALL PENETRATIONS THOROUGH UL RATED ASSEMBLIES, FIRE AND SMOKE WALLS. COORDINATE WITH GENERAL CONTRACTOR.
14. NO OTHER TRADES, I.E., ELECTRICAL, CEILING OR PLUMBING SHALL BE SUSPENDED, HUNG, OR SUPPORTED FROM DUCTWORK OR PIPING.
15. THE EQUIPMENT LOCATIONS SHOWN ON THE DRAWINGS ARE APPROXIMATE. THE FINAL LOCATIONS SHALL BE ESTABLISHED IN THE FIELD TO FIT THE AVAILABLE SPACE.
16. VISIT THE SITE TO ESTABLISH THE EXISTING CONDITIONS PRIOR TO DUCT, PIPE OR EQUIPMENT FABRICATION. SYSTEMS SHALL BE ERECTED USING FIELD MEASUREMENTS FOR COORDINATION WITH THE EXISTING EQUIPMENT, STRUCTURE, FIRE PROTECTION AND ELECTRICAL IN THE SPACE.
17. MAINTAIN THE SECURITY OF THE BUILDING AT ALL TIMES.
18. CORE DRILL ALL NEW PIPING PENETRATIONS OF EXISTING CONCRETE WALLS AND FLOORS.
19. PROVIDE ACCESS DOORS IN WALLS, FLOOR, AND CEILING FOR ACCESS TO ALL FIRE DAMPERS, SMOKE DAMPERS, EQUIPMENT, COILS, VALVES, AND BALANCING DAMPERS. ACCESS DOORS ARE NOT REQUIRED WHERE DEVICES ARE DIRECTLY ACCESSIBLE THROUGH AIR DEVICES. MINIMUM SIZE SHALL BE 18" X 18" UNLESS NOTED OTHERWISE. PROVIDE DUCT ACCESS DOORS AT ALL FIRE, SMOKE, AND CONTROL DAMPERS.
20. INSTALL FIRE DAMPERS AND SMOKE DAMPERS IN ALL RATED WALLS AS REQUIRED BY ALL AUTHORITIES HAVING JURISDICTION, REGARDLESS OF INDICATION ON SHEETS. SEAL AROUND ALL PENETRATIONS OF RATED WALLS, CHASES, CEILINGS, AND FLOORS TO MAINTAIN THE FIRE/SMOKE RATING OF THE ASSEMBLY.
21. MAINTAIN A MINIMUM OF 10'-0" BETWEEN ALL FRESH AIR INTAKES AND PLUMBING VENTS, EXHAUST FAN DISCHARGE, AND FLUES. MAINTAIN MINIMUM CLEAR DISTANCE OF 5'0" BETWEEN PARAPET WALL AND ALL ROOF MOUNTED MECHANICAL EQUIPMENT.
22. CONTRACTOR SHALL FIELD VERIFY ALL PIPE ROUTING AND ADJUST ELEVATIONS AS REQUIRED TO AVOID CONFLICTS. FINAL PLACEMENT OF PIPING SHALL BE DETERMINED BY FIELD MEASUREMENT AND VERIFICATION. ELEVATIONS ARE REFERENCED TO PIPE CENTERLINE UNLESS OTHERWISE NOTED.
23. CONTRACTOR SHALL VERIFY CLOSELY, AT SITE, TRANSPORTATION OF NEW HVAC EQUIPMENT INTO MECHANICAL AREAS BEFORE BIDDING. PROVIDE COMPLETE DISASSEMBLY AND RE-ASSEMBLY OF NEW EQUIPMENT AS REQUIRED FOR A COMPLETE INSTALLATION.
24. DO NOT OPERATE AIR MOVING EQUIPMENT AS PART OF TEMPORARY HEATING OR COOLING SYSTEMS. DO NOT OPERATE DURING ANY WORK THAT PRODUCES DUST. PROVIDE TEMPORARY HEATING OR COOLING AS NEEDED FOR TEMPERATURE CONTROL. COORDINATE THIS REQUIREMENT WITH GENERAL CONTRACTOR.
25. PROTECT EQUIPMENT DURING CONSTRUCTION WITH A SET OF FILTERS. PROTECT ALL OPENINGS IN EQUIPMENT AND DUCTWORK WITH FILTER MEDIA. THOROUGHLY CLEAN INSIDE SURFACES OF AIR MOVING EQUIPMENT AT THE COMPLETION OF CONSTRUCTION. CLEANING OF DUCTWORK MAY BE REQUIRED IF OPENINGS ARE NOT PROPERLY PROTECTED DURING CONSTRUCTION. DEMONSTRATE TO ENGINEER CLEAN, DIRT AND DUST FREE, AIR UNITS AND DUCTWORK BEFORE STARTING TEST AND BALANCE WORK. INSTALL NEW SET OF FILTERS PRIOR TO TEST AND BALANCE. INSTALL NEW FILTERS AT THE COMPLETION OF CONSTRUCTION.
26. NOT ALL REQUIRED PIPING, VALVES, OR FITTINGS ARE SHOWN ON DRAWINGS FOR CLARITY. COORDINATE PLAN DETAILS WITH SPECIFICATIONS, SCHEMATICS, FLOW DIAGRAMS, AND OTHER DETAILS TO PROVIDE ALL PIPING SYSTEMS, COMPLETE.
27. COORDINATE WORK CLOSELY WITH CONTROL REQUIREMENTS. PROVIDE ALL NECESSARY DUCT TAPS, PIPE TAPS, WELLS, AND OTHER APPURTENANCES REQUIRED BY CONTROL SYSTEM. PROVIDE SPARE PIPE WELL ADJACENT TO EACH TEMPERATURE SENSOR IN PIPING.
28. SEE STRUCTURAL PLANS FOR EXACT DIMENSIONS AND DETAILS OF THE BUILDING.
29. COORDINATE FINAL PLACEMENT OF ALL THERMOSTATS WITH ARCHITECT AND ENGINEER. ANY THERMOSTAT THAT IS REQUIRED TO BE MOUNTED ON AN EXTERIOR WALL SHALL BE MOUNTED ON AN INSULATED PAD.
30. INSTALL SMOKE DETECTOR IN SUPPLY AND RETURN DUCT OF ALL AIR HANDLERS SUPPLYING GREATER THAN 2000 CFM.
31. PROVIDE CONCRETE PADS FOR ALL GROUND MOUNTED EQUIPMENT.
32. REPLACE ALL ARCHITECTURAL FEATURES REMOVED OR DAMAGED DURING THE COURSE OF THE WORK.
33. REFER TO ARCHITECTURAL PLANS FOR LOCATION OF FIRE AND SMOKE WALLS. PROVIDE FIRE, SMOKE, AND COMBINATION FIRE AND SMOKE DAMPERS IN ALL DUCT PENETRATIONS OF THESE WALLS ACCORDING TO THE FOLLOWING SCHEDULE: 1 HOUR FIRE WALL – PROVIDE FIRE DAMPER IN ALL DUCTS WITH FREE AREA GREATER THAN 100 SQUARE INCHES; 2 HOUR FIRE WALL – PROVIDE FIRE DAMPER; 2 HOUR SMOKE WALL – PROVIDE SMOKE DAMPER; 2 HOUR FIRE AND SMOKE WALL – PROVIDE COMBINATION FIRE AND SMOKE DAMPER
34. PROVIDE DUCT ACCESS DOORS AT ALL FIRE, SMOKE, AND COMBINATION FIRE AND SMOKE DAMPERS. PROVIDE DUCT ACCESS DOORS AT ALL CONTROL DAMPERS. PROVIDE DUCT ACCESS DOORS UPSTREAM OF ALL DUCT TURNING VANES, DUCT AIR MEASURING STATIONS AND DUCT MOUNTED COILS.
35. DUCTWORK AND PIPING SUPPORTED FROM ROOF STRUCTURE SHALL BE SUPPORTED USING SUPPORT DEVICES AND HANGERS ATTACHED TO THE TOP PORTION OF THE BOTTOM TRUSS MEMBERS. ADEQUATELY SIZED ANGLES, CHANNELS, OR UNISTRUT MEMBERS MAY BE USED TO SPAN BETWEEN TRUSS MEMBERS WITH SUPPORT DEVICES AND HANGERS BEING ATTACHED TO THE SPANNING MEMBERS. ALL SUPPORTING SYSTEMS SHALL BE COORDINATED WITH AND APPROVED BY STRUCTURAL ENGINEER.
36. EXCEPT WHERE MODIFIED BY SPECIFIC NOTATION TO THE CONTRARY, IT SHALL BE UNDERSTOOD THAT THE INDICATION AND/OR DESCRIPTION OF ANY ITEM, IN THE DRAWINGS OR SPECIFICATIONS OR BOTH, CARRIES WITH IT THE INSTRUCTION TO FURNISH AND INSTALL THE ITEM, REGARDLESS OF WHETHER OR NOT THIS INSTRUCTION IS EXPLICITLY STATED AS PART OF THE INDICATION OR DESCRIPTION.
37. ALL HVAC COMPONENTS WITH ELECTRICAL REQUIREMENTS SHALL BE INSTALLED WITH ELECTRICAL INFRASTRUCTURE NECESSARY TO PROVIDE A FULLY FUNCTIONING SYSTEM. IF NOT SPECIFICALLY SHOWN ON ELECTRICAL SCHEDULE, HVAC FIXTURES REQUIRING ELECTRICAL SERVICE SHALL BE FED FROM BREAKER OF ADEQUATE CAPACITY.

GENERAL NOTES

SHEET NOTES

PARTITION LEGEND

NEW UNRATED PARTITION

NEW / EXISTING 1 HOUR BARRIER

P:\PRODUCTION\PROJECTS\CRAFTON TULL (CTA)\CTA-014 WASHINGTON COUNTY VA BOOSTER STATION AND TANK\DWG\M01_NOTES AND LEGEND.DWG
7/13/2022 5:10 PM
4/11/2022 2:12:56 PM

Revisions: Date:

CONSULTANTS

FIRE PROTECTION: FP&C CONSULTANTS KC, LLC, 1330 BURLINGTON STREET, STE. 200, NORTH KANSAS CITY, MO 64116

SECURITY: GRW, 801 CORPORATE DRIVE, LEXINGTON, KY 40503

CIVIL ENGINEER: HODGES ENGINEERING, 231 SHORELINE DRIVE, MOUNTAIN HOME, AR 72653

STRUCTURAL ENGINEER: BERNHARD TME, BUILDING 2, 1 ALLIED DRIVE, SUITE 260, LITTLE ROCK, AR 72202

ARCHITECT/ENGINEER OF RECORD

A/E
JohnsonDanforth & Associates
2200 N. RODNEY PARHAM ROAD
SUITE 210
LITTLE ROCK, AR 72212
501-404-4811
jda@JohnsonDanforth.com
JDA PROJECT #: 2018.001

STAMP: STATE OF ARKANSAS REGISTERED PROFESSIONAL ENGINEER BENJAMIN C. RICHARDSON 12267

Office of Construction and Facilities Management
VA U.S. Department of Veterans Affairs

Drawing Title: MECHANICAL NOTES AND LEGEND	Phase: CONSTRUCTION DOCUMENTS	Project Title: CONSTRUCT NEW WATER STORAGE FACILITY	Project Number: 564-19-101
Approved: Project Director	FULLY SPRINKLERED	Location: FAYETTEVILLE, AR	Building Number
		Issue Date: 2022.05.12 / Checked: BB / Drawn: CD	Drawing Number: M101

VA FORM 08 - 6231

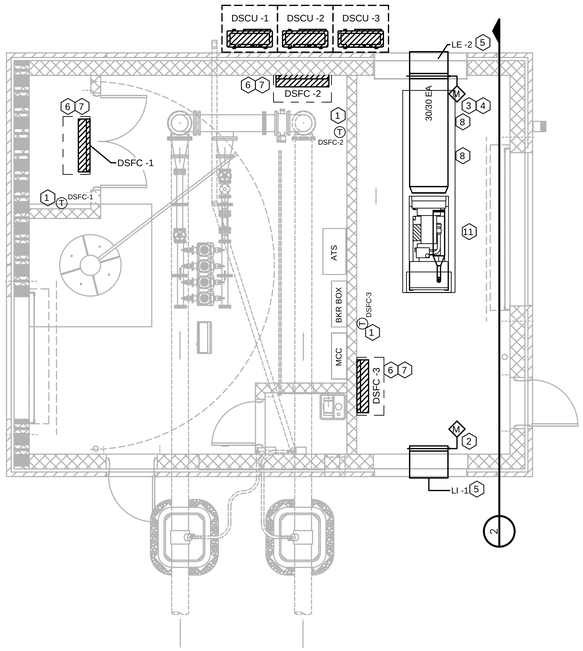

1 HVAC PLAN
SCALE: 1/4" = 1'-0"

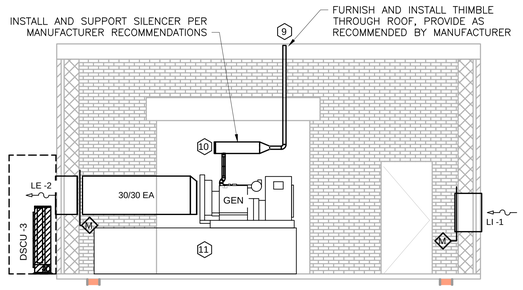

2 GENERATOR SECTION
SCALE: 1/4" = 1'-0"

KEYED NOTES:

1. PROVIDE DUCTLESS SPLIT MANUFACTURER'S HARDWIRED THERMOSTAT - MOUNT PER ADA REQUIREMENTS. INTEGRATE MINISPLIT CONTROLS WITH CAMPUS CONTROL SYSTEM.
2. PROVIDE INTAKE LOUVER ASSEMBLY, LI-1: EXTERNAL STATIONARY LOUVER, BLAST DAMPER AND INTERNAL MOTORIZED CONTROL DAMPER WITH ACTUATOR INTERLOCKED WITH GENERATOR ENGINE. WHEN GENERATOR IS CALLED TO ENERGIZE, LOUVER SHALL BE OPEN. ACTUATOR SHALL FAIL OPEN. COORDINATE POWER AND INTERLOCK REQUIREMENTS WITH ELECTRICAL CONTRACTOR.
3. PROVIDE EXHAUST DUCT FROM GENERATOR RADIATOR TO LOUVER ASSEMBLY, LE-2: EXTERNAL STATIONARY LOUVER, BLAST PROOF DAMPER AND INTERNAL MOTORIZED CONTROL DAMPER INTERLOCKED WITH GENERATOR. REFER TO ELECTRICAL FOR FULL CONTROL SEQUENCE. WHEN GENERATOR IS ENERGIZED, LOUVER SHALL BE OPEN. ACTUATOR SHALL FAIL OPEN.
4. PROVIDE 12"X12" DUCT ACCESS DOOR FOR ACCESS TO LOUVER ACTUATOR. TYPICAL OF ALL DUCTED LOUVER/DAMPERS.
5. MOUNT BOTTOM OF LOUVER AT SAME ELEVATION AS GENERATOR RADIATOR EXHAUST A MINIMUM OF 8" AFF. COORDINATE FINAL PLACEMENT WITH ARCHITECTURAL AND BLOCK COURSING.
6. DUCTLESS SPLIT SYSTEM WALL MOUNTED TERMINAL UNIT. ROUTE INSULATED REFRIGERANT PIPING SIZED PER MANUFACTURER'S RECOMMENDATIONS FROM UNIT TO EXTERIOR WALL AND DROP INSIDE BUILDING NEAR ASSOCIATED CONDENSER. PENETRATE THROUGH TO EXTERIOR 12" AFF.
7. ROUTE 3/4" SCH 40 PVC CONDENSATE FROM DUCTLESS SPLIT CASSETTE TO 1" CD (REFER TO DETAILS). ROUTE CD OVERHEAD TO EXTERIOR PORCH COLUMN AND DROP ALONG COLUMN. TERMINATE IN LANDSCAPED AREA 3" AFG.
8. FUEL TANK VENT CONNECTIONS THIS AREA. COORDINATE WITH GENERATOR AND TANK MANUFACTURER TO MEET REQUIREMENTS (CUSTOM AS REQUIRED). ROUTE STEEL EXHAUST PIPING SEPARATE AND FULL SIZED FROM FUEL TANK UP THROUGH ROOF TO GOOSENECK TERMINATION. COVER OPENING WITH INSECT SCREEN. OFFSET AS REQUIRED TO AVOID INTERFERENCE WITH ROOM OPERATIONS, STRUCTURAL, OR ARCHITECTRUAL COMPONENTS. TERMINATION SHALL COMPLY WITH LOCAL CODES AND PER GENERATOR MANUFACTURER'S RECOMMENDATIONS. TYPICAL FOR ALL FUEL TANK VENTS.
9. ROUTE GENERATOR ENGINE EXHAUST UP THROUGH ROOF. PROVIDE GENERATOR MANUFACTURER'S RECOMMENDED EXHAUST PENETRATION FITTING (THIMBLE) AT ROOF PENETRATION. REFER TO GENERATOR SPECIFICATIONS. ROUTE PER MANUFACTURER'S RECOMMENDATIONS AND CLEARANCES.
10. CRITICAL EXHAUST SILENCER PROVIDED WITH GENERATOR. INSTALLED BY MECHANICAL CONTRACTOR. REFER TO GENERATOR SPECIFICATIONS. MAINTAIN APPROX. 2' CLEARANCE TO COMBUSTIBLES.
11. MAINTAIN ACCESS AND CLEARNCE TO GENERATOR TANK FUEL FILL PORT AND INDICATOR.

HVAC -- DUCTLESS SPLIT CONDENSER SCHEDULE

DESIGNATION TYPE	DESIGNATION MARK	DESCRIPTION	MANUFACTURER	MODEL	ELECTRICAL DATA VOLTAGE	PHASE	MCA	MOCP	REMARKS
DSCU	1	SPLIT SYSTEM CONDENSING UNIT	SAMSUNG	AC030JXADCH/AA	208 V	1	20.3 A	30.0 A	
DSCU	2	SPLIT SYSTEM CONDENSING UNIT	SAMSUNG	AC036JXADCH/AA	208 V	1	23.2 A	35.0 A	
DSCU	3	SPLIT SYSTEM CONDENSING UNIT	SAMSUNG	AC036JXADCH/AA	208 V	1	23.2 A	35.0 A	

1 OUTDOOR UNIT SHALL BE PROVIDED WITH DISCONNECT SWITCH, SEE ELECTRICAL.
2 CONDENSER SHALL BE PROVIDED WITH LOW AMBIENT CONTROL.
3 CONDENSING UNIT AND INDOOR UNIT SHALL BE PROVIDED FROM SAME MANUFACTURER, AND BE FULLY COMPATIBLE WITH EACH OTHER.

HVAC -- DUCTLESS SPLIT FAN COIL SCHEDULE

DESIGNATION TYPE	DESIGNATION MARK	DESCRIPTION	MANUFACTURER	MODEL	COOLING DATA MAX SUPPLY AIR	TOTAL COOLING	ELECTRICAL DATA VOLTAGE	PHASE	REMARKS
DSFC	1	2.5 TON WALL COIL UNIT	SAMSUNG	AC030MNTDCH/AA	777 CFM	30,000 Btu/h	208 V	1	
DSFC	2	3 TON WALL COIL UNIT	SAMSUNG	AC036MNTDCH/AA	830 CFM	36,000 Btu/h	208 V	1	
DSFC	3	3 TON WALL COIL UNIT	SAMSUNG	AC036MNTDCH/AA	830 CFM	36,000 Btu/h	208 V	1	

1 PROVIDE WITH HARD-WIRED PROGRAMMABLE THERMOSTAT MOUNTED ON WALL. SEE CONTROL DETAILS AND SPECIFICATIONS FOR ADDITIONAL REQUIREMENTS.
2 INDOOR UNIT POWERED FROM OUTDOOR UNIT.
3 AHU CONDENSATE SHALL BE RUN FULL SIZE AND DISCHARGE TO EXTERIOR OF BUILDING, AS PER MANUFACTURER'S RECOMMENDATION.
4 UNIT SHALL OPERATE ON R-410A.

HVAC -- LOUVER SCHEDULE

DESIGNATION TYPE	DESIGNATION MARK	MANUFACTURER	MODEL: EXT STATIONARY / BLAST DAMPER / MOTORIZED CONTROL DAMPER	STYLE	AIRFLOW DATA FREE AREA	MAX INLET VELOCITY	FACE SIZE W	H	FINISH	REMARKS
LI	1	GREENHECK	ESD-635 / HBS-430 / SEVCD-23	LOUVER ASSEMBLY: STATIONARY EXTERIOR LOUVER, BLAST DAMPER, AND MOTORIZED CONTROL DAMPER W/ ACTUATOR	3.1 SF	900 FPM	30"	30"	COORDINATE W/ ARCHITECT	PROVIDE WITH 120V ACTUATOR EQUAL TO HONEYWELL MODEL MS4109F1010
LE	2	GREENHECK	ESD-635 / HBS-431 / SEFSD-211	LOUVER ASSEMBLY: STATIONARY EXTERIOR LOUVER, BLAST DAMPER, AND MOTORIZED CONTROL DAMPER W/ ACTUATOR	3.1 SF	900 FPM	30"	30"	COORDINATE W/ ARCHITECT	PROVIDE WITH 120V ACTUATOR EQUAL TO HONEYWELL MODEL MS4109F1010

1 CONTRACTOR SHALL COORDINATE COLOR AND FINISH WITH ARCHITECT. CONTRACTOR SHALL SUBMIT MANUFACTURER'S COLOR OPTIONS TO ARCHITECT BEFORE ORDERING ALL LOUVERS.
2 LOUVERS SHALL BE INSTALLED WITH BIRD SCREEN.
3 FINAL HEIGHT AND LOCATION OF LOUVER SHALL BE COORDINATED WITH GENERATOR RADIATOR EXHAUST LOCATION

GENERAL NOTES

SHEET NOTES

PARTITION LEGEND

NEW UNRATED PARTITION

NEW / EXISTING 1 HOUR BARRIER

Revisions: Date:

CONSULTANTS

FP&C CONSULTANTS
FIRE PROTECTION
FP&C CONSULTANTS KC, LLC
1330 BURLINGTON STREET, STE. 200
NORTH KANSAS CITY, MO 64116

GRW
SECURITY
GRW
801 CORPORATE DRIVE
LEXINGTON, KY 40503

Hodges Engineering
CIVIL ENGINEER
HODGES ENGINEERING
231 SHORELINE DRIVE
MOUNTAIN HOME, AR 72653

Bernhard TME Engineering
STRUCTURAL ENGINEER
BERNHARD TME
BUILDING 2, 1 ALLIED DRIVE
SUITE 260
LITTLE ROCK, AR 72202

ARCHITECT/ENGINEER OF RECORD
A/E
JohnsonDanforth & Associates
2200 N. RODNEY PARHAM ROAD
SUITE 210
LITTLE ROCK, AR 72212
501-404-4811
jda@JohnsonDanforth.com
JDA PROJECT #: 2018.001

STAMP
STATE OF ARKANSAS
REGISTERED PROFESSIONAL ENGINEER
MELANIE C. RICHARDSON

Office of Construction and Facilities Management
VA U.S. Department of Veterans Affairs

Drawing Title: MECHANICAL HVAR FLOOR PLAN
Approved: Project Director
Phase: CONSTRUCTION DOCUMENTS
FULLY SPRINKLERED
Project Title: CONSTRUCT NEW WATER STORAGE FACILITY
Project Number: 564-19-101
Building Number:
Location: FAYETTEVILLE, AR
Issue Date: 2022.05.12
Checked: BB
Drawn: CD
Drawing Number: M201

VA FORM 08 - 6231

P:\PRODUCTION\PROJECTS\CRAFTON TULL (CTA)\CTA-014 WASHINGTON COUNTY VA BOOSTER STATION AND TANK\DWG\M02_HVAC FLOOR PLAN.DWG
4/11/2022 2:12:56 PM
7/13/2022 5:22 PM

System Architecture

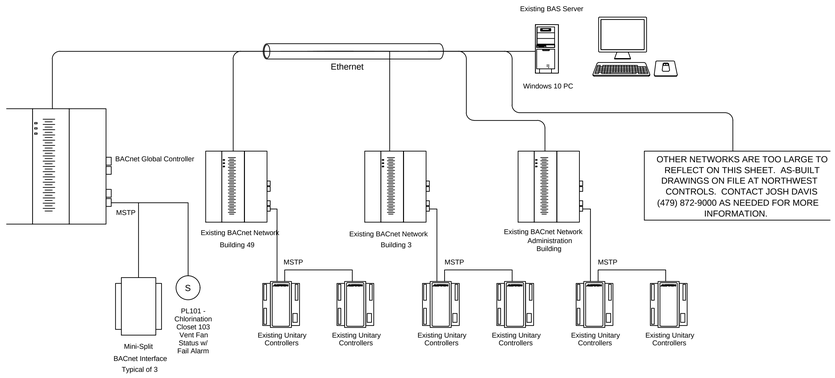

1 SYSTEM ARCHITECTURE
SCALE: NONE

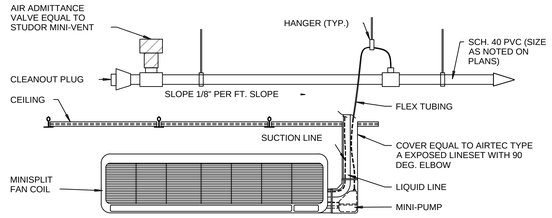

2 DUCTLESS WALL MINISPLIT
SCALE: NONE

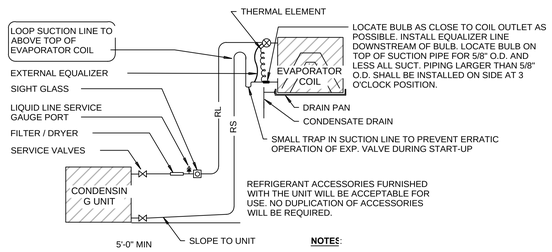

NOTES:

1. WRAP EXPANSION VALVE, BULB AND FITTINGS WITH ARMAFLEX INSULATION TAPE AND SECURE WITH BLACK CABLE TIES.
2. TRAP AND LOOP AT EVAPORATOR COIL IS NOT REQUIRED FOR UNITS WITH LIQUID LINE SOLENOID VALVES.
3. SUCTION LINES SHALL BE INSULATED. LIQUID LINES SHALL BE INSULATED ONLY ON DUCTLESS MINI-SPLITS.
4. INSTALL WATER-TIGHT ALUMINUM JACKETING ON ALL EXTERIOR REFRIGERANT PIPING.

3 REFRIGERANT PIPING
SCALE: NONE

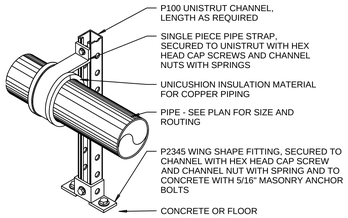

4 PIPE SUPPORT
SCALE: NONE

GENERAL NOTES

SHEET NOTES

PARTITION LEGEND

NEW UNRATED PARTITION

NEW / EXISTING 1 HOUR BARRIER

Revisions: **Date:**

CONSULTANTS

FIRE PROTECTION
FP&C CONSULTANTS KC, LLC
1330 BURLINGTON STREET, STE. 200
NORTH KANSAS CITY, MO 64116

SECURITY
GRW
801 CORPORATE DRIVE
LEXINGTON, KY 40503

CIVIL ENGINEER
HODGES ENGINEERING
231 SHORELINE DRIVE
MOUNTAIN HOME, AR 72653

STRUCTURAL ENGINEER
BERNHARD TME
BUILDING 2, 1 ALLIED DRIVE
SUITE 260
LITTLE ROCK, AR 72202

ARCHITECT/ENGINEER OF RECORD
A/E
JohnsonDanforth & Associates
2200 N. RODNEY PARHAM ROAD
SUITE 210
LITTLE ROCK, AR 72212
501-404-4811
jda@JohnsonDanforth.com
JDA PROJECT #: 2018.001

STAMP
STATE OF ARKANSAS REGISTERED PROFESSIONAL ENGINEER 17426 JAMES C. RICHARDSON 7/13/22

Office of Construction and Facilities Management
VA U.S. Department of Veterans Affairs

Drawing Title: MECHANICAL HVAR DETAILS	Phase: CONSTRUCTION DOCUMENTS	Project Title: CONSTRUCT NEW WATER STORAGE FACILITY	Project Number: 564-19-101
Approved: Project Director	FULLY SPRINKLERED	Location: FAYETTEVILLE, AR	Building Number
		Issue Date: 2022.05.12 / Checked: BB / Drawn: CD	Drawing Number: M301

VA FORM 08 - 6231

P:\PRODUCTION\PROJECTS\CRAFTON TULL (CTA)\CTA-014 WASHINGTON COUNTY VA BOOSTER STATION AND TANK\DWG\M03_HVAC DETAILS.DWG
7/13/2022 5:23 PM
4/11/2022 2:12:56 PM

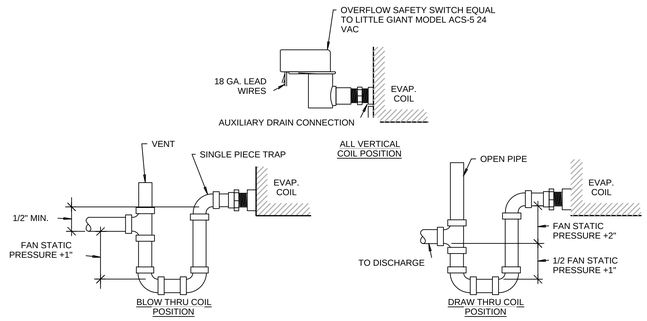

NOTES:

1. RUNNING TRAPS WILL NOT BE ACCEPTED.
2. INSTALL FACTORY FURNISHED TRAP WITH OUTSIDE AIR UNITS.
3. CONDENSATE DISCHARGE LOCATION SHALL MEET REQUIREMENTS OF ALL LOCAL CODES AND AUTHORITIES HAVING JURISDICTION.

1 CONDENSATE TRAP
SCALE: NONE

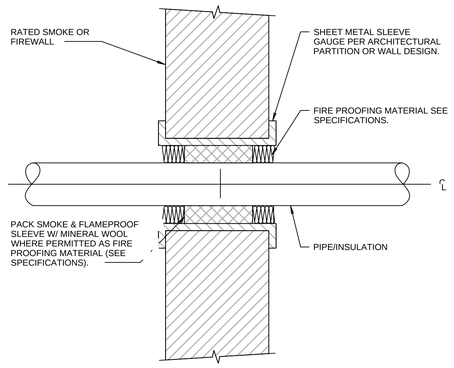

3 PIPE PENETRATION AT SMOKE AND FIREWALL
SCALE: NONE

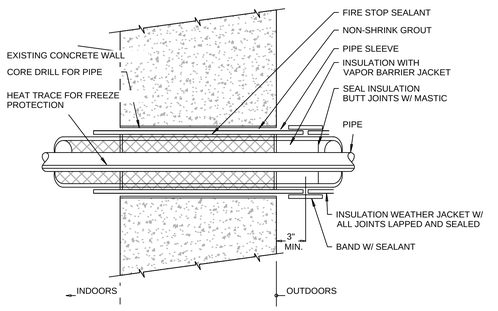

NOTE:

SIMILAR AT INTERIOR WALLS EXCEPT WITHOUT EXTERIOR INSULATION AND JACKETING.

2 PIPE PENETRATION – WALL
SCALE: NONE

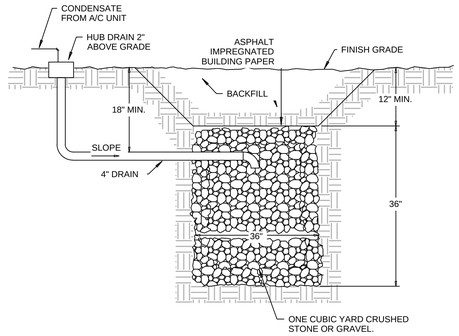

4 AREA CONDENSATE DRAIN
SCALE: NONE

GENERAL NOTES

SHEET NOTES

PARTITION LEGEND

NEW UNRATED PARTITION

NEW / EXISTING 1 HOUR BARRIER

Revisions: Date:

CONSULTANTS

FIRE PROTECTION: FP&C CONSULTANTS KC, LLC — 1330 BURLINGTON STREET, STE. 200, NORTH KANSAS CITY, MO 64116

SECURITY: GRW — 801 CORPORATE DRIVE, LEXINGTON, KY 40503

CIVIL ENGINEER: HODGES ENGINEERING — 231 SHORELINE DRIVE, MOUNTAIN HOME, AR 72653

STRUCTURAL ENGINEER: BERNHARD TME — BUILDING 2, 1 ALLIED DRIVE, SUITE 260, LITTLE ROCK, AR 72202

ARCHITECT/ENGINEER OF RECORD

A/E
JohnsonDanforth & Associates
2200 N. RODNEY PARHAM ROAD
SUITE 210
LITTLE ROCK, AR 72212

501-404-4811
jda@JohnsonDanforth.com

JDA PROJECT #: 2018.001

STAMP: STATE OF ARKANSAS REGISTERED PROFESSIONAL ENGINEER 14267 MELANIE C. RICHARDSON

Office of Construction and Facilities Management

VA U.S. Department of Veterans Affairs

Drawing Title: MECHANICAL HVAR DETAILS	Phase: CONSTRUCTION DOCUMENTS	Project Title: CONSTRUCT NEW WATER STORAGE FACILITY	Project Number: 564-19-101
Approved: Project Director	FULLY SPRINKLERED	Location: FAYETTEVILLE, AR	Building Number
		Issue Date: 2022.05.12 / Checked: BB / Drawn: CD	Drawing Number: M302

P:\PRODUCTION\PROJECTS\CRAFTON TULL (CTA)\CTA-014 WASHINGTON COUNTY VA BOOSTER STATION AND TANK\DWG\M04_HVAC DETAILS II.DWG
5/12/2022 10:27 AM
4/11/2022 2:12:56 PM

VA FORM 08 - 6231

POWER, LIGHTING & SYSTEM LEGEND

- UNDER CABINET LIGHT FIXTURE
- 1x4 FLUORESCENT LIGHT
- 2x4 FLUORESCENT LIGHT
- EL — FLUORESCENT LIGHT WITH EMERGENCY LIGHT (EL) BATTERY 1400 LUMENS MINIMUM FOR 2 LAMPS
- 2x2 FLUORESCENT LIGHT
- RECESSED LIGHT, UNLESS OTHERWISE SHOWN
- WALL MOUNTED LIGHT–MOUNTING HEIGHT AS INDICATED
- LED EXIT LIGHT, CEILING MOUNTED OR AS INDICATED, DARKENED AREA INDICATES FACE, ARROWS INDICATE DIRECTION OF EGRESS
- EMERGENCY EXIT LIGHT, WALL MOUNT 7'–6" A.F.F. OR AS NOTED
- 4 FT. STRIP FLUORESCENT LIGHT
- S — LIGHT SWITCH, MTD. 4'–0" A.F.F.
- S_2 — LIGHT SWITCH, 2 POLE, MTD 4'–0" A.F.F.
- S_3 — LIGHT SWITCH, 3–WAY, MTD. 4'–0" A.F.F.
- S_4 — LIGHT SWITCH, 4–WAY, MTD. 4'–0" A.F.F.
- S_P — LIGHT SWITCH WITH PILOT LIGHT, MTD. 4'–0" A.F.F.
- 20 AMP DUPLEX RECEPTACLE MTD. HORIZ. 6" ABOVE COUNTER TOP UNLESS OTHERWISE SHOWN
- 20 AMP DUPLEX RECEPTACLE MTD. 18" A.F.F., WITH #12 GROUND WIRE, GFCI INDICATES GROUND FAULT CIRCUIT INTERRUPTER, WP INDICATES WEATHERPROOF WHILE IN USE ENCLOSURE AND COVER
- SINGLE RECEPTACLE, RATINGS AS NOTED
- S_M — HP RATED TOGGLE SWITCH, 1 OR 2 POLES AS REQUIRED W/OVERLOADS
- OR — NON–FUSED DISCONNECT SWITCH, SIZE AS NOTED
- OR — COMBINATION DISCONNECT AND MOTOR STARTER, SIZE AS NOTED. FUSED TYPE SHOWN.
- F OR — FUSED DISCONNECT SWITCH, SIZE AS NOTED
- PUSHBUTTON STATION, NEMA 4X
- ELECTRICAL PANEL, SURFACE MOUNTED, 5'–6" TO TOP OF ENCLOSURE
- ELECTRICAL PANEL, RECESSED MOUNTED, 5'–6" TO TOP OT ENCLOSURE
- EQUIPMENT CABINET SIZE AS NOTED, RECESSED MOUNTED, 5'–6" TO TOP OF ENCLOSURE
- EQUIPMENT CABINET SIZE AS NOTED, SURFACE MOUNTED, 5'–6" TO TOP OF ENCLOSURE
- L–1 — HOME RUN TO PANEL, RECEPTACLES AND EQUIPMENT SHALL HAVE GREEN GROUND WIRE. NUMBER OF ARROWS INDICATES NUMBER OF PHASE CONDUCTORS, LETTER(S) INDICATE NAME OF PANEL, NUMBER(S) INDICATE CIRCUIT NUMBERS
- BRANCH CIRCUIT WITH PHASE, NEUTRAL, SWITCHED PHASE AND EQUIPMENT GROUNDING CONDUCTORS
- W — TELEPHONE OR DATA OUTLET, SINGLE GANG BOX MTD. 18" A.F.F. WITH 3/4"C STUB TO ABOVE LAY–IN CEILING. "W" INDICATES 4'–6" MTD. HEIGHT FOR WALL PHONE.
- 3/4" PLYWOOD TELEPHONE BACKBOARD, SIZE AS NOTED, MTD. 5'–6" TO TOP
- J — JUNCTION BOX 42 CUBIC INCH MINIMUM CAPACITY
- S — SMOKE DETECTOR, WALL MTD.
- S — SMOKE DETECTOR, CEILING MTD.
- F — FIRE ALARM PULL STATION MTD. 4'–0" A.F.F.
- F — FIRE ALARM PULL STATION MTD. 4'–0" A.F.F. AND HORN MTD. 7'–0" A.F.F.
- D — SMOKE DETECTOR, HVAC DUCT MTD.
- C — FIRE ALARM CHIME 7'–0" A.F.F.
- FS — SPRINKLER FLOW SWITCH
- FLOOR TELEPHONE OUTLET, CAST JUNCTION–BOX
- WALL TELEPHONE/DATA OUTLET
- S — DOOR SWITCH MOUNTED IN DOOR JAMB
- DOOR BUTTON WEATHER PROOF, 50" A.F.F.
- B — DOOR BUZZER MTD 7'–0" A.F.F.
- H OR MH — HANDHOLE OR MANHOLE, IDENTIFIER SHOWN, REFER TO HANDHOLE OR MANHOLE SCHEDULE FOR SIZE (H–1, MH–1)
- CIRCUIT BREAKER, TRIP RATING SHOWN, 3–POLE UNLESS NOTED
- * — FUSE, CURRENT LIMITING, RATING AS SHOWN
- * — TRANSFORMER, RATINGS AS SHOWN
- M, 10 HP — ELECTRIC MOTOR, HORSEPOWER SHOWN
- * — MOTOR STARTER, SIZE AS SHOWN OR REQUIRED. FVNR UNLESS NOTED
- VARIABLE FREQUENCY DRIVE
- 4–4" — DUCT BANK, IDENTIFIER SHOWN. REFER TO DUCT BANK SCHEDULE FOR SIZE AND CONFIGURATION.
- 3/4" x 10' COPPER CLAD GROUND ROD
- SA — SURGE ARRESTOR
- G, * kW — GENERATOR
- ATS/BP/IS 3P400 — ATS
- WEATHERHEAD
- CABLE CONNECTION

LINE TYPES

- FURNISH + INSTALL
- EXISTING

2(3#8 + 1#8 + 1#10EG) 3/4" GRS

- CONDUIT TYPE (SEE ABBREVIATIONS) REFER TO SPECIFICATIONS IF NOT SHOWN
- CONDUIT SIZE
- GROUNDING (GROUND) CONDUCTOR, NUMBER AND SIZE
- GROUNDED (NEUTRAL) CONDUCTOR, NUMBER AND SIZE
- PHASE (HOT) CONDUCTOR, NUMBER AND SIZE
- NUMBER OF SETS

GENERAL NOTE:

1. SOME SYMBOLS OR ABBREVIATIONS MAY APPEAR ON THIS SHEET AND NOT BE UTILIZED ON THE PROJECT.

ABBREVIATIONS

A	AMP
ACU	AIR CONDITIONING UNIT
AFF	ABOVE FINISHED FLOOR
AIC	AMPS INTERRUPTING CAPACITY
AM	AMP–METER
ANN	ANNUNCIATOR
AP	AERIAL PRIMARY
AS	AERIAL SECONDARY
AUX	AUXILIARY
BFI	BLOWN FUSE INDICATOR
BKR	BREAKER
C	CONDUIT
CGRS	PVC COATED GALVANIZED RIGID STEEL
CKT	CIRCUIT
COM	COMMON
CONT	CONTINUOUS
CP	CONTROL PANEL
CPT	CONTROL POWER TRANSFORMER
CR	CONTROL RELAY
CS	CORD SET
CU	COEFFICIENT OF UTILIZATION
DEB	DIRECT EARTH BURIED
EC	EMPTY OR EMBEDDED CONDUIT
EF	EXHAUST FAN
EG	EQUIPMENT GROUND
EL	ELEVATION
EMT	ELECTRICAL METALLIC TUBING
ETM	ELASPED TIME METER
FA	FIRE ALARM
FAP	FIRE ALARM PANEL
FC	FAN COIL
FLR	FLOOR
FOC	FIBER OPTIC CABLE
FS	FLOAT SWITCH
FT	FEET
FVNR	FULL VOLTAGE NON–REVERSING STARTER
FVR	FULL VOLTAGE REVERSING STARTER
GFCI	GROUND FAULT CIRCUIT INTERRUPTER
GND	GROUND
GRS	GALVANIZED RIGID STEEL
HOA	HAND–OFF–AUTO
HP	HORSEPOWER OR HEAT PUMP
HR	HOUR
JB	JUNCTION BOX
kVA	KILOVOLT–AMPERE
kVAR	KILOVOLT–AMPERE, REACTIVE
kW	KILOWATT
LA	LIGHTNING ARRESTOR
L.O.	LUGS ONLY
LV	LOW VOLTAGE
MCB	MAIN CIRCUIT BREAKER
MCC	MOTOR CONTROL CENTER
MCP	MOTOR CIRCUIT PROTECTOR
MFR	MANUFACTURER
MIN	MINIMUM
MS	MOTOR STARTER
MTD	MOUNTED
NFDS	NON–FUSED DISCONNECT SWITCH
NTS	NOT TO SCALE
OC	ON CENTER
OH	OVERHEAD
OL	OVERLOAD
PB	PUSH BUTTON
PEC	PHOTO ELECTRIC CELL
PF	POWER FACTOR
PL	PILOT LIGHT
PMR	PHASE MONITOR RELAY
PNL	PANEL
PTT	PUSH–TO–TEST
PVC	SCHEDULE 40 POLYVINYL CONDUIT
RECPT	RECEPTACLE
RM	ROOM
RVAT	REDUCED VOLTAGE AUTO–TRANSFORMER STARTER
S	SECOND
SA	SURGE ARRESTER
SDBC	SOFT DRAWN BARE COPPER
SE	SERVICE ENTRANCE
SHT	SHEET
SN	SOLID NEUTRAL
SS	STAINLESS STEEL
STA	STATION
SW	SWITCH
TC	TIME CLOCK
TEL	TELEPHONE
TD	TIME DELAY
TDD	TIME DELAY ON DE–ENERGIZATION
TDE	TIME DELAY ON ENERGIZATION
TYP	TYPICAL
TVSS	TRANSIENT VOLTAGE SURGE SUPPRESSOR
UG	UNDER GROUND
UH	UNIT HEATER
UP	UNDERGROUND PRIMARY
US	UNDERGROUND SECONDARY
VA	VOLT–AMP
VFD	VARIABLE FREQUENCY DRIVE
VM	VOLT–METER
W	WATT OR WIRE
WH	WEATHER HEAD
WM	WATT METER
WP	WEATHERPROOF
W/	WITH
XMFR	TRANSFORMER

CONTROL SCHEMATIC LEGEND

- WIRING WITHIN PANEL
- WIRING TO FIELD DEVICE
- PUSHBUTTON SWITCH, NORMALLY OPEN
- PUSHBUTTON SWITCH, NORMALLY CLOSED
- SELECTOR SWITCH, NUMBER OF POSITIONS AND CONTACTS AS SHOWN
- RELAY CONTACT, NORMALLY OPEN
- RELAY CONTACT, NORMALLY CLOSED
- TIME DELAY CONTACT, CLOSE ON ENERGIZATION
- TIME DELAY CONTACT, OPEN ON ENERGIZATION
- TIME DELAY CONTACT, OPEN ON DE–ENERGIZATION
- TIME DELAY CONTACT, CLOSE ON DE–ENERGIZATION
- LEVEL SWITCH
- PRESSURE SWITCH
- LIMIT SWITCH CONTACT, NORMALLY OPEN
- LIMIT SWITCH CONTACT, NORMALLY CLOSED
- LIMIT SWITCH CONTACT, HELD OPEN
- LIMIT SWITCH CONTACT, HELD CLOSED
- RELAY COIL, "TR" INDICATES "TIMING RELAY"
- PILOT LIGHT; "A" INDICATES "AMBER LENS" "G" INDICATES "GREEN LENS" "R" INDICATES "RED LENS"
- SOLENOID
- ETM — ELAPSED TIME METER
- TERMINAL BLOCK
- ELECTRICAL CONNECTION
- FUSE, AMPERE RATING AS SHOWN OR REQUIRED "BFI" INDICATES "BLOWN FUSE INDICATOR" TYPE
- GROUND CONNECTION TO ENCLOSURE GROUND BAR

GENERAL NOTES

SHEET NOTES

PARTITION LEGEND

- NEW UNRATED PARTITION
- NEW / EXISTING 1 HOUR BARRIER

CONSULTANTS

FPC & CONSULTANTS — FIRE PROTECTION
FP&C CONSULTANTS KC, LLC
1330 BURLINGTON STREET, STE. 200
NORTH KANSAS CITY, MO 64116

GRW — SECURITY
GRW
801 CORPORATE DRIVE
LEXINGTON, KY 40503

Hodges Engineering — CIVIL ENGINEER
HODGES ENGINEERING
231 SHORELINE DRIVE
MOUNTAIN HOME, AR 72653

Bernhard TME Engineering — STRUCTURAL ENGINEER
BERNHARD TME
BUILDING 2, 1 ALLIED DRIVE
SUITE 260
LITTLE ROCK, AR 72202

ARCHITECT/ENGINEER OF RECORD
A/E
JohnsonDanforth & Associates
2200 N. RODNEY PARHAM ROAD
SUITE 210
LITTLE ROCK, AR 72212
501-404-4811
jda@JohnsonDanforth.com
JDA PROJECT #: 2018.001

STAMP: STATE OF ARKANSAS REGISTERED PROFESSIONAL ENGINEER No. 10206 BRUCE W. BROWN

Office of Construction and Facilities Management

VA U.S. Department of Veterans Affairs

Drawing Title	ELECTRICAL LEGEND AND ABBREVIATIONS
Phase	CONSTRUCTION DOCUMENTS
Project Title	CONSTRUCT NEW WATER STORAGE FACILITY
Project Number	564-19-101
Building Number	
Approved: Project Director	
	FULLY SPRINKLERED
Location	FAYETTEVILLE, AR
Drawing Number	E101
Issue Date	2022.05.12
Checked	BB
Drawn	CD

Revisions: Date:

VA FORM 08 - 6231

P:\PRODUCTION\PROJECTS\CRAFTON TULL (CTA)\CTA-014 WASHINGTON COUNTY VA BOOSTER STATION AND TANK\DWG\E01_LEGEND.DWG 4/11/2022 2:12:56 PM 7/13/2022 4:51 PM

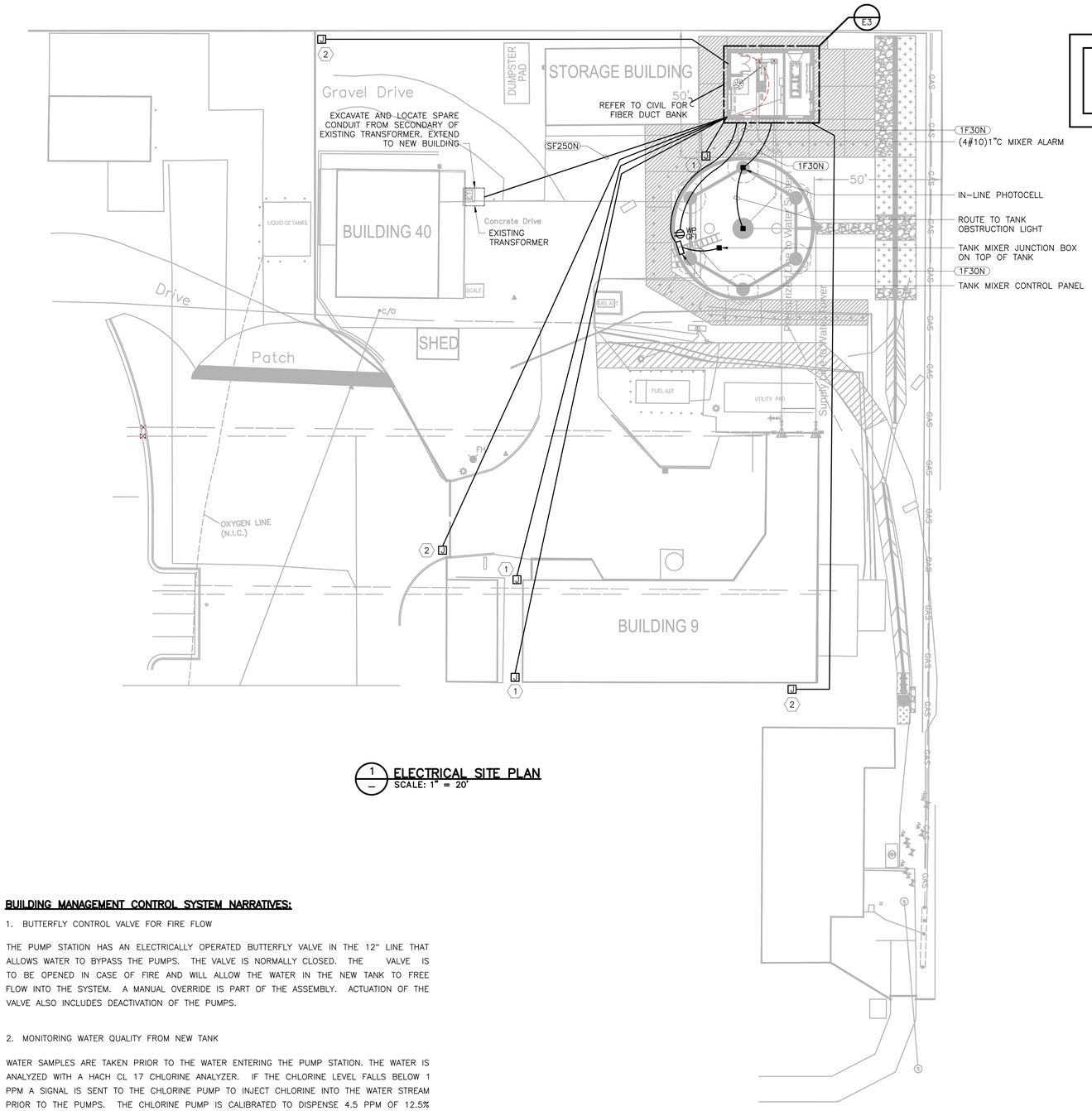

1 ELECTRICAL SITE PLAN
SCALE: 1" = 20'

ALL SITE CONDUIT SHALL BE CONCRETE ENCASED

KEYED NOTES:

1. PEDESTRIAN ACCESS GATE. ROUTE 2(1F20N) AND (1 EMPTY)2"C TO PUMPHOUSE. ROUTE POWER CONDUIT TO PANELBOARD, EMPTY CONDUIT TO SECURITY CLOSET.
2. VEHICLE ACCESS GATE. ROUTE 2(1F20N) AND (1 EMPTY)2"C TO PUMPHOUSE. ROUTE POWER CONDUIT TO PANELBOARD, EMPTY CONDUIT TO SECURITY CLOSET.

SIGNAL SCHEDULE

TYPE ID	DESCRIPTION	SIGNAL DESCRIPTION
AI	PRESSURE TRANSMITTER	TANK LEVEL
AI	CHLORINE ANALYZER	CHLORINE LEVEL
AI	CHLORINE ANALYZER	CHLORINE LEVEL
AI	PRESSURE TRANSMITTER	LINE PRESSURE
AI	MIXER CONTROL PANEL	MIXER ALARM
DI	AUTOMATIC TRANSFER SWITCH	GENERATOR POWER AVAILABLE
DI	AUTOMATIC TRANSFER SWITCH	UTILITY POWER AVAILABLE
DI	PUMP 1, MOTOR CONTROLLER	PUMP 1, FAILURE
DI	PUMP 1, MOTOR CONTROLLER	PUMP 1, RUNNING
DI	PUMP 2, MOTOR CONTROLLER	PUMP 2, FAILURE
DI	PUMP 2, MOTOR CONTROLLER	PUMP 2, RUNNING
DI	PUMP 3, MOTOR CONTROLLER	PUMP 3, FAILURE
DI	PUMP 3, MOTOR CONTROLLER	PUMP 3, RUNNING
DI	PUMP 4, MOTOR CONTROLLER	PUMP 4, FAILURE
DI	PUMP 4, MOTOR CONTROLLER	PUMP 4, RUNNING
DI	MIXER CONTROL PANEL	MIXER RUNNING
DI	DSCU-1	HVAC STATUS
DI	DSCU-2	HVAC STATUS
DI	DSCU-3	HVAC STATUS
DI	TEMPERATURE SWITCH	ROOM TEMPERATURE
DI	BYPASS VALVE	OPENED
DI	BYPASS VALVE	CLOSED
DO	BYPASS VALVE	OPEN
DO	BYPASS VALVE	CLOSE
DO	CHEM FEEDER	RUNNING
DI	CHEM FEEDER	STEPPED

BUILDING MANAGEMENT CONTROL SYSTEM NARRATIVES:

1. BUTTERFLY CONTROL VALVE FOR FIRE FLOW

THE PUMP STATION HAS AN ELECTRICALLY OPERATED BUTTERFLY VALVE IN THE 12" LINE THAT ALLOWS WATER TO BYPASS THE PUMPS. THE VALVE IS NORMALLY CLOSED. THE VALVE IS TO BE OPENED IN CASE OF FIRE AND WILL ALLOW THE WATER IN THE NEW TANK TO FREE FLOW INTO THE SYSTEM. A MANUAL OVERRIDE IS PART OF THE ASSEMBLY. ACTUATION OF THE VALVE ALSO INCLUDES DEACTIVATION OF THE PUMPS.

2. MONITORING WATER QUALITY FROM NEW TANK

WATER SAMPLES ARE TAKEN PRIOR TO THE WATER ENTERING THE PUMP STATION. THE WATER IS ANALYZED WITH A HACH CL 17 CHLORINE ANALYZER. IF THE CHLORINE LEVEL FALLS BELOW 1 PPM A SIGNAL IS SENT TO THE CHLORINE PUMP TO INJECT CHLORINE INTO THE WATER STREAM PRIOR TO THE PUMPS. THE CHLORINE PUMP IS CALIBRATED TO DISPENSE 4.5 PPM OF 12.5% SODIUM HYPOCHLORITE. THIS WILL RAISE THE CHLORINE LEVEL 1 (ONE) PPM. WITH THE ADDITION OF THE PROGRAMMABLE LOGIC CONTROLLER (PLC) THE FEED RATES ARE ADJUSTABLE. A SECOND WATER SAMPLING POINT IS LOCATED ON THE DISCHARGE SIDE OF THE PUMP STATION. THIS SAMPLE POINT WILL MEASURE CHLORINE LEVELS AND SEND THE RESULTS TO THE PLC. THE PLC WILL ANALYZE THE DATA AND ADJUST THE CHLORINE PUMP OUTPUT TO MAINTAIN THE CHLORINE RESIDUAL NOT TO EXCEED 2 PPM.

GENERAL NOTES

SHEET NOTES

PARTITION LEGEND

NEW UNRATED PARTITION

NEW / EXISTING 1 HOUR BARRIER

Revisions: Date:

CONSULTANTS

FIRE PROTECTION: FP&C CONSULTANTS KC, LLC, 1330 BURLINGTON STREET, STE. 200, NORTH KANSAS CITY, MO 64116

SECURITY: GRW, 801 CORPORATE DRIVE, LEXINGTON, KY 40503

CIVIL ENGINEER: HODGES ENGINEERING, 231 SHORELINE DRIVE, MOUNTAIN HOME, AR 72653

STRUCTURAL ENGINEER: BERNHARD TME, BUILDING 2, 1 ALLIED DRIVE, SUITE 260, LITTLE ROCK, AR 72202

ARCHITECT/ENGINEER OF RECORD

A/E
JohnsonDanforth & Associates
2200 N. RODNEY PARHAM ROAD
SUITE 210
LITTLE ROCK, AR 72212

501-404-4811
jda@JohnsonDanforth.com

JDA PROJECT #: 2018.001

STAMP: STATE OF ARKANSAS REGISTERED PROFESSIONAL ENGINEER No. 10206 BRUCE W. BROWN

Office of Construction and Facilities Management

VA U.S. Department of Veterans Affairs

Drawing Title: ELECTRICAL PUMP STATION SITE PLAN

Approved: Project Director

Phase: CONSTRUCTION DOCUMENTS

FULLY SPRINKLERED

Project Title: CONSTRUCT NEW WATER STORAGE FACILITY

Location: FAYETTEVILLE, AR

Issue Date: 2022.05.12

Checked: BB

Drawn: CD

Project Number: 564-19-101

Building Number:

Drawing Number: E102

P:\PRODUCTION\PROJECTS\CRAFTON TULL (CTA)\CTA-014 WASHINGTON COUNTY VA BOOSTER STATION AND TANK\DWG\E02_PS SITE PLAN.DWG
7/13/2022 4:52 PM
4/11/2022 2:12:56 PM

VA FORM 08 - 6231

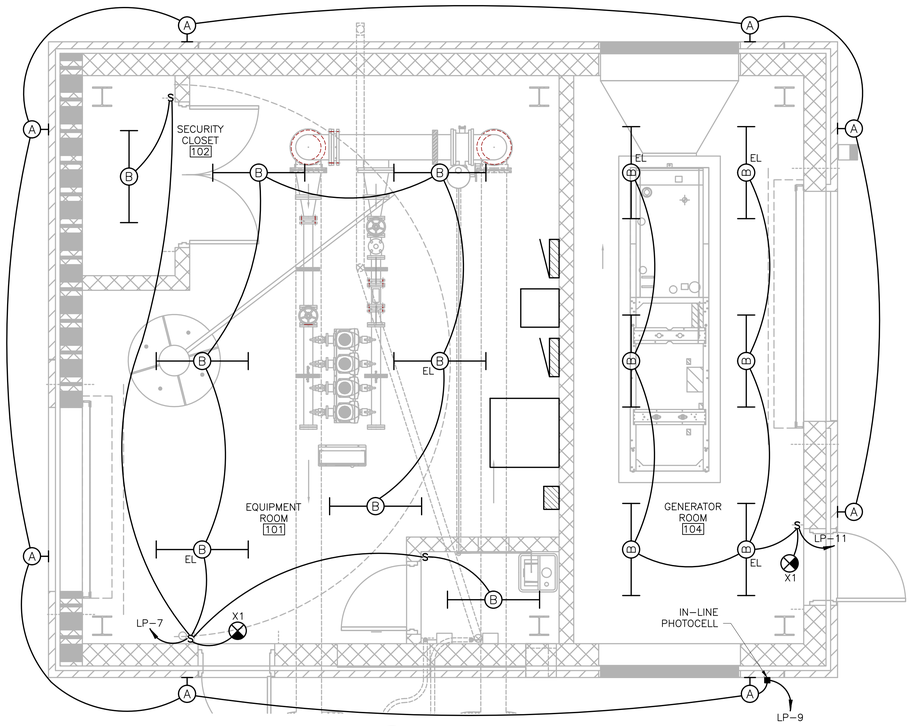

1 PUMP STATION LIGHTING PLAN
SCALE: 3/8" = 1'-0"

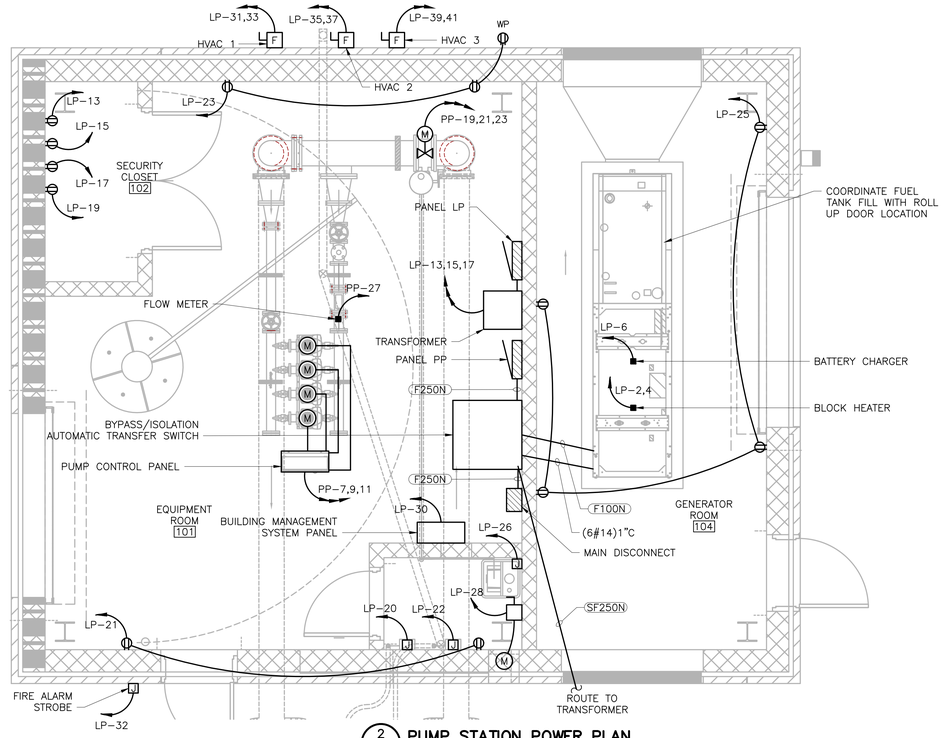

2 PUMP STATION POWER PLAN
SCALE: 3/8" = 1'-0"

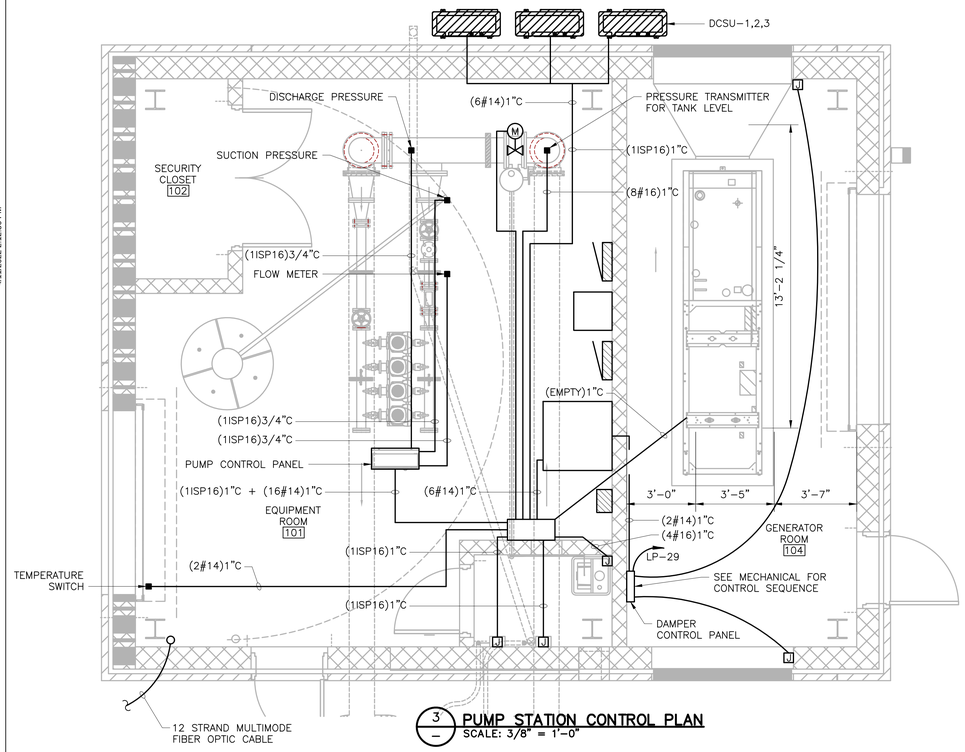

3 PUMP STATION CONTROL PLAN
SCALE: 3/8" = 1'-0"

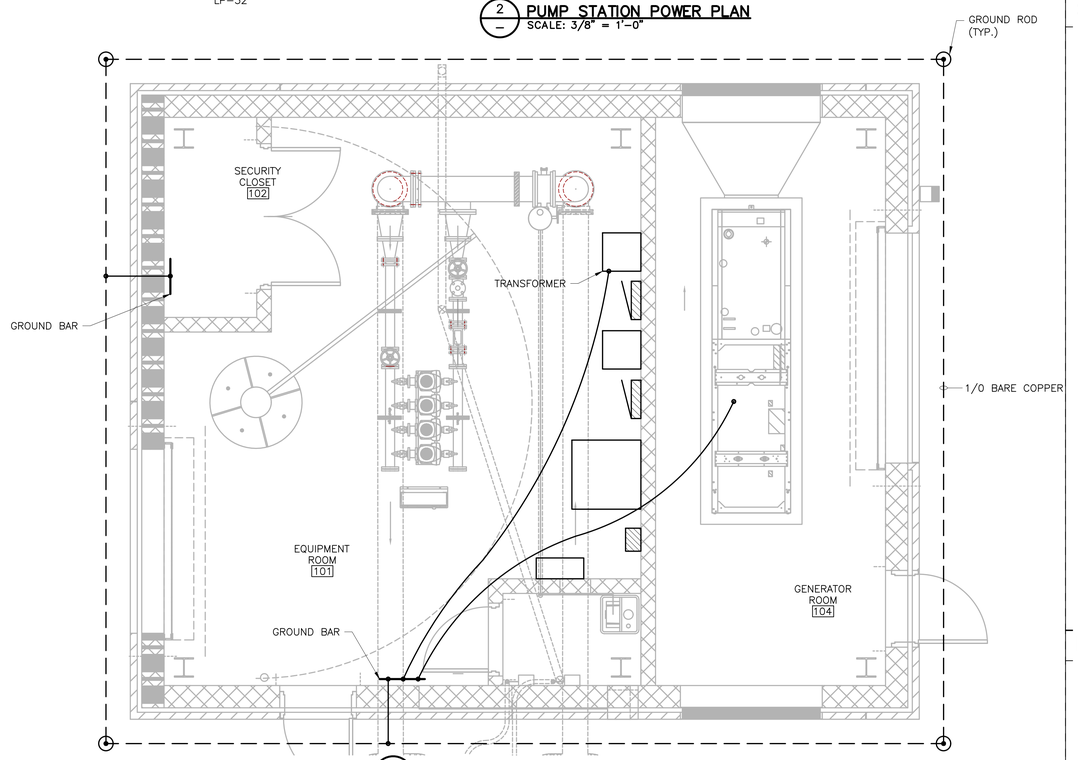

3 PUMP STATION GROUNDING PLAN
SCALE: 3/8" = 1'-0"

GENERAL NOTES

SHEET NOTES

PARTITION LEGEND

NEW UNRATED PARTITION

NEW / EXISTING 1 HOUR BARRIER

Revisions: Date:

CONSULTANTS

FPC CONSULTANTS
FIRE PROTECTION
FP&C CONSULTANTS KC, LLC
1330 BURLINGTON STREET, STE. 200
NORTH KANSAS CITY, MO 64116

GRW
SECURITY
GRW
801 CORPORATE DRIVE
LEXINGTON, KY 40503

Hodges Engineering
CIVIL ENGINEER
HODGES ENGINEERING
231 SHORELINE DRIVE
MOUNTAIN HOME, AR 72653

Bernhard TME Engineering
STRUCTURAL ENGINEER
BERNHARD TME
BUILDING 2, 1 ALLIED DRIVE
SUITE 260
LITTLE ROCK, AR 72202

ARCHITECT/ENGINEER OF RECORD
A/E
JohnsonDanforth & Associates
2200 N. RODNEY PARHAM ROAD
SUITE 210
LITTLE ROCK, AR 72212
501-404-4811
jda@JohnsonDanforth.com
JDA PROJECT #: 2018.001

STAMP
STATE OF ARKANSAS
REGISTERED PROFESSIONAL ENGINEER
No. 10206
BRUCE W. BROWN
4-15-2022

Office of Construction and Facilities Management
VA U.S. Department of Veterans Affairs

Drawing Title: ELECTRICAL PUMP STATION PLAN	Phase: CONSTRUCTION DOCUMENTS	Project Title: CONSTRUCT NEW WATER STORAGE FACILITY	Project Number: 564-19-101
Approved: Project Director	FULLY SPRINKLERED	Location: FAYETTEVILLE, AR	Building Number:
		Issue Date: 2022.05.12 / Checked: BB / Drawn: CD	Drawing Number: E103

VA FORM 08 - 6231

P:\PRODUCTION\PROJECTS\CRAFTON TULL (CTA)\CTA-014 WASHINGTON COUNTY VA BOOSTER STATION AND TANK\DWG\E03_PS PLAN.DWG
4/11/2022 2:12:56 PM
7/13/2022 4:55 PM

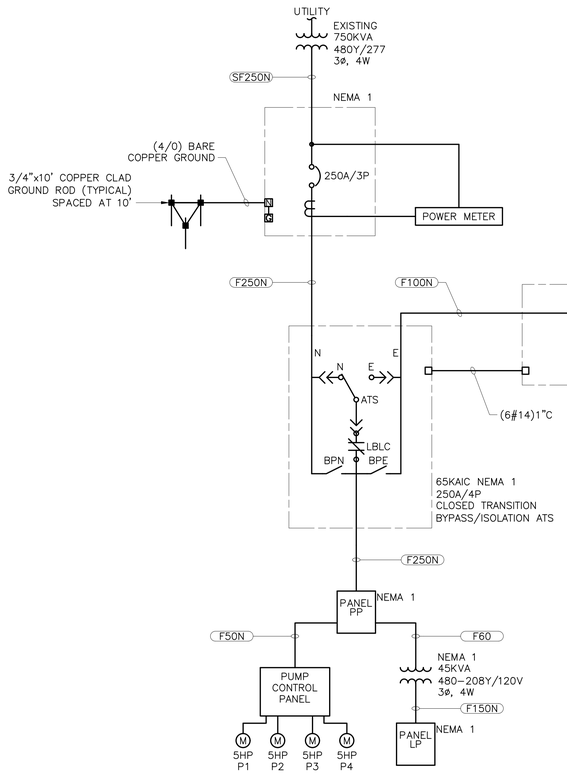

1 / E4 **ONE-LINE DIAGRAM**
SCALE: NONE

GENERATOR LOADING SCHEDULE:

(3) 5HP VFD'S

(1) 25KVA MISC. LOAD

DESIGN BASIS – KOHLER

TRANSFER SEQUENCE:

OPEN LOSS OF POWER ATS SHALL TRANSFER 100% OFF ALL LOADS AND SYSTEMS TO GENERATOR POWER

PANELBOARD SCHEDULE

PANEL	PP	VOLTS	480Y/277 3PH, 4W		MAIN	250A MCB		INTERRUPT RATING	65,000		
DESCRIPTION	**BKR**	**NO.**	**A**	**B**	**C**	**A**	**B**	**C**	**NO.**	**BKR**	**DESCRIPTION**
SURGE PROTECTIVE DEVICE	60A/3P	1	0.000			0.000			2		
SURGE PROTECTIVE DEVICE	–	3		0.000			0.000		4		
SURGE PROTECTIVE DEVICE	–	5			0.000			0.000	6		
PUMP CONTROL PANEL	50A/3P	7	8.400			0.000			8		
PUMP CONTROL PANEL	–	9		8.400			0.000		10		
PUMP CONTROL PANEL	–	11			8.400			0.000	12		
TRANSFORMER "LP"	60A/3P	13	10.000			0.000			14		
TRANSFORMER "LP"	–	15		10.000			0.000		16		
TRANSFORMER "LP"	–	17			10.000			0.000	18		
BYPASS VALVE	20A/3P	19	0.300			0.000			20		
BYPASS VALVE	–	21		0.300			0.000		22		
BYPASS VALVE	–	23			0.300			0.000	24		
		25	0.000			0.000			26		
		27		0.000			0.000		28		
		29			0.000			0.000	30		
		31	0.000			0.000			32		
		33		0.000			0.000		34		
		35			0.000			0.000	36		
		37	0.000			0.000			38		
		39		0.000			0.000		40		
		41			0.000			0.000	42		
			18.7000	18.7000	18.7000	0.0000	0.0000	0.0000			
			18.7000	18.7000	18.7000	TOTAL CONNECTED KVA					
			56.1000								
			87.6562			DESIGN KVA					
			105.437175			DESIGN AMPS	@	480			

PANELBOARD SCHEDULE

PANEL	LP	VOLTS	208Y/120 3PH, 4W		MAIN	150A MCB		INTERRUPT RATING	10,000		
DESCRIPTION	**BKR**	**NO.**	**A**	**B**	**C**	**A**	**B**	**C**	**NO.**	**BKR**	**DESCRIPTION**
SURGE PROTECTIVE DEVICE	60A/3P	1	0.000			1.500			2	20A/2P	GENERATOR BLOCK HEATER
SURGE PROTECTIVE DEVICE	–	3		0.000			1.500		4	–	GENERATOR BLOCK HEATER
SURGE PROTECTIVE DEVICE	–	5			0.000			0.500	6	20A/1P	BATTERY CHARGER
INTERIOR LIGHTING	20A/1P	7	0.500			0.500			8	20A/1P	PEDESTRIAN GATE
EXTERIOR LIGHTING	20A/1P	9		0.500			0.500		10	20A/1P	PEDESTRIAN GATE
GEN ROOM LIGHTING	20A/1P	11			0.250			1.000	12	20A/2P	VEHICLE GATE
SERVER RECEPT	20A/1P	13	1.000			1.000			14	20A/2P	VEHICLE GATE
SERVER RECEPT	20A/1P	15		1.000			1.000		16	20A/2P	VEHICLE GATE
SERVER RECEPT	20A/1P	17			1.000			1.000	18	20A/2P	VEHICLE GATE
SERVER RECEPT	20A/1P	19	1.000			0.500			20	20A/1P	CL ANALYZER
* PUMP ROOM RECEPT	20A/1P	21		1.000			0.500		22	20A/1P	CL ANALYZER
* PUMP ROOM RECEPT	20A/1P	23			1.000			1.500	24	20A/1P	TANK MIXER
* PUMP ROOM RECEPT	20A/1P	25	1.000			0.500			26	20A/1P	CHLORINE FEEDER
FLOW METER	20A/1P	27		0.500			1.000		28	20A/1P	EX FAN
DAMPER CONTROL PANEL	20A/1P	29			0.500			0.000	30	20A/1P	FACP STROBE
HVAC 1	30A/2P	31	1.500			0.050			32	20A/1P	POE INJECTOR
HVAC 1	–	33		1.500			0.050		34	20A/1P	POE INJECTOR
HVAC 2	35A/2P	35			1.500			0.050	36	20A/1P	POE INJECTOR
HVAC 2	–	37	1.500			0.050			38	20A/1P	POE INJECTOR
HVAC 3	35A/2P	39		1.500			0.050		40	20A/1P	POE INJECTOR
HVAC 3	–	41			1.500			0.050	42	20A/1P	POE INJECTOR
* GFCI BREAKER			6.5000	6.0000	5.7500	4.1000	4.6000	4.1000	** PROVIDE 56 CIRCUIT PANEL		
			10.6000	10.6000	9.8500	TOTAL CONNECTED KVA					
			31.0500								
			48.5156			DESIGN KVA					
			58.356939			DESIGN AMPS	@	480			

FEEDER SCHEDULE

FEEDER DESIGNATION	AMPERE RATING	CONDUCTOR SIZE (AWG OF KCMIL) PH	CONDUCTOR SIZE (AWG OF KCMIL) GND	CONDUIT NO. RUNS	CONDUIT SIZE
F20	20	12	12	1	1"
F30	30	10	10	1	1"
F40	40	8	10	1	1-1/4"
F50	50	6	10	1	1-1/4"
F60	60	6	10	1	1-1/4"
F70	70	4	8	1	1-1/2"
F80	80	4	8	1	1-1/2"
F90	90	2	8	1	2"
F100	100	2	8	1	2"
F110	110	2	6	1	2"
F125	125	1/0	6	1	2-1/2"
F150	150	1/0	6	1	2-1/2"
F175	175	2/0	6	1	2-1/2"
F200	200	3/0	6	1	3"
F225	225	4/0	4	1	3"
F250	250	250	4	1	4"
F300	300	350	4	1	4"
F350	350	500	2	1	4"
F400	400	500	1/0	1	4"
F450	450	4/0	2	2	3"
F500	500	250	2	2	4"
F600	600	350	1/0	2	4"
F700	700	500	1/0	2	4"
F800	800	500	1/0	2	4"
F1000	1000	500	2/0	3	4"
F1200	1200	350	3/0	4	4"
F1600	1600	500	4/0	5	4"
F2000	2000	500	250	6	4"
F2500	2500	500	350	7	4"
F3000	3000	500	500	8	4"
F4000	4000	500	500	11	4"

FEEDER SCHEDULE NOTES:

1. "H" SUFFIX INDICATES THAT FEEDER IS TO BE USED ON A 480 VOLT CIRCUIT.
2. "L" SUFFIX INDICATES THAT FEEDER IS TO BE USED ON 208/240 VOLT CIRCUIT.
3. "N" SUFFIX INDICATES THAT FEEDER CONTAINS A FULL SIZE NEUTRAL CONDUCTOR. OTHERWISE PROVIDE ONLY PHASE AND GROUND CONDUCTORS.
4. "1" PREFIX INDICATES A SINGLE PHASE FEEDER (LINE-TO-LINE). OTHERWISE ASSUME 3-PHASE FEEDER.
5. "S" PREFIX INDICATES A SERVICE FEEDER CONSISTING OF PHASE CONDUCTORS PLUS A FULL SIZE GROUNDED SERVICE CONDUCTOR (NEUTRAL).
6. "CO" MEANS PROVIDE CONDUIT ONLY FOR THAT FEEDER SIZE.

LIGHT FIXTURE SCHEDULE

ID	TYPE	MANUFACTURER	MODEL	LAMP TYPE	VOLTAGE	WATTS	NOTE	MOUNTING HEIGHT
A	EXTERIOR WALL PACK, LED	HUBBELL	PGM3-180L-4K-U-DB-X	LED	120-277	72	–	12'
B	INTERIOR 4' NON-METALLIC STRIP, LED	AZZ/RIG-A-LITE	CHL-11L-C4U	LED	120-277	40	9884LU, EL INDICATES BATT/EMERGENCY EGRESS	CHAIN HUNG AT 12'
C	CROUSE HINDS	ISOLITE	DCL-RU-BA-BA-MTEBP	LED	120	2W		
X1	EXIT SIGN	43961-116-GR	L-810 (L) DOUBLE OBSTRUCTION LIGHT	(2) 30W LED	120V	30W	1" CONDUIT HUB. LED WITH INTERNAL HEATER	ABOVE DOOR

GENERAL NOTES

SHEET NOTES

PARTITION LEGEND

NEW UNRATED PARTITION

NEW / EXISTING 1 HOUR BARRIER

Revisions: Date:

CONSULTANTS

FP&C CONSULTANTS
FIRE PROTECTION
FP&C CONSULTANTS KC, LLC
1330 BURLINGTON STREET, STE. 200
NORTH KANSAS CITY, MO 64116

GRW
SECURITY
GRW
801 CORPORATE DRIVE
LEXINGTON, KY 40503

Hodges Engineering
CIVIL ENGINEER
HODGES ENGINEERING
231 SHORELINE DRIVE
MOUNTAIN HOME, AR 72653

Bernhard TME Engineering
STRUCTURAL ENGINEER
BERNHARD TME
BUILDING 2, 1 ALLIED DRIVE
SUITE 260
LITTLE ROCK, AR 72202

ARCHITECT/ENGINEER OF RECORD
A/E
JohnsonDanforth & Associates
2200 N. RODNEY PARHAM ROAD
SUITE 210
LITTLE ROCK, AR 72212
501-404-4811
jda@JohnsonDanforth.com
JDA PROJECT #: 2018.001

STAMP
STATE OF ARKANSAS
REGISTERED PROFESSIONAL ENGINEER
No. 10206
BRUCE W. BROWN

Office of Construction and Facilities Management
VA U.S. Department of Veterans Affairs

Drawing Title: ELECTRICAL ONE-LINE AND SCHEDULES
Approved: Project Director
Phase: CONSTRUCTION DOCUMENTS
FULLY SPRINKLERED
Project Title: CONSTRUCT NEW WATER STORAGE FACILITY
Project Number: 564-19-101
Building Number:
Location: FAYETTEVILLE, AR
Drawing Number: E104
Issue Date: 2022.05.12
Checked: BB
Drawn: CD

VA FORM 08 - 6231

P:\PRODUCTION\PROJECTS\CRAFTON TULL (CTA)\CTA-014 WASHINGTON COUNTY VA BOOSTER STATION AND TANK\DWG\E04_ONE-LINE AND SCHEDULES.DWG
7/13/2022 5:02 PM
4/11/2022 2:12:56 PM

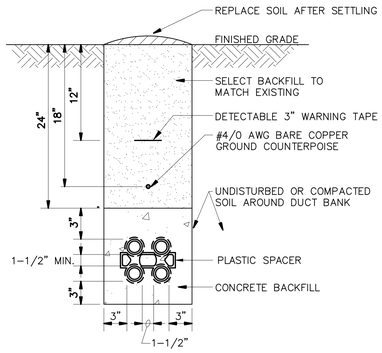

TRENCH DETAIL
SCALE: NONE

ELECTRICAL DUCT NOTES:

1. CONTRACTOR SHALL STAKE THE DUCT INSTALLATION IN PLAN AND ELEVATION FOR NEW ELECTRICAL DUCTS TO AVOID EXISTING UTILITIES.
2. CONTRACTOR SHALL ADJUST THE DEPTH OF THE ELECTRICAL DUCTS AS REQUIRED TO MAINTAIN THE MINIMUM COVER REQUIREMENT INDICATED AND AVOID EXISTING UTILITIES.
3. SIMILAR CONSTRUCTION FOR OTHER DUCT SIZES. SEE DUCT BANK SCHEDULE FOR QUANTITY AND SIZES.
4. INSTALL DUCT CONDUIT SUPPORTS AT 5'-0" O.C. MAXIMUM SPACING (TYPICAL ALL DUCTS).
5. OFFSETS AND BENDS OVER 10 DEGREES AND ELBOWS IN PVC CONDUIT RUNS SHALL BE PVC COATED GALVANIZED RIGID STEEL CONDUIT.
6. NO PVC SHALL EMERGE FROM THE GROUND OR CONCRETE SLAB OR ENCASEMENT, PVC SHALL CONVERT TO PVC COATED GALVANIZED RIGID STEEL CONDUIT PRIOR TO ITS EMERGENCE.
7. INSTALL GROUND RODS AT ENDS OF ELECTRICAL DUCT OR CONNECT TO GROUND RING.
8. INSTALL CONDUCTORS AND CABLES AS NOTED ON DRAWING. INSTALL PULLWIRE IN ALL SPARE DUCTS.
9. MINIMUM COVER REQUIREMENT FOR DUCT BANKS UNDER ROADS, DRIVEWAYS AND PARKING LOTS SHALL BE 24".
10. MINIMUM COVER REQUIREMENTS FOR ELECTRICAL SECONDARY SERVICE DUCT BANKS SHALL BE 30".
11. MINIMUM COVER REQUIREMENTS FOR ELECTRICAL PRIMARY SERVICE DUCT BANKS SHALL BE 36".
12. CONCRETE SHALL BE 2000P.S.I. @ 28 DAYS, OR AS SPECIFIED.
13. PROVIDE #4 REINFORCING RODS ON TOP AND BOTTOM OF DUCTS WHEN CROSSING OR PLACED IN ROADWAYS.

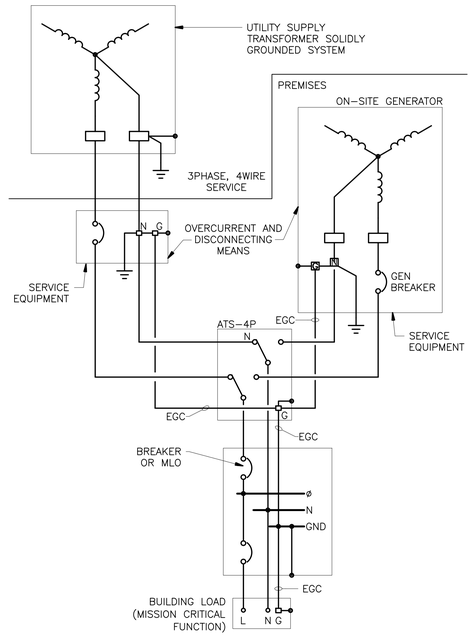

GROUNDING DIAGRAM 4 POLE
SCALE: NONE

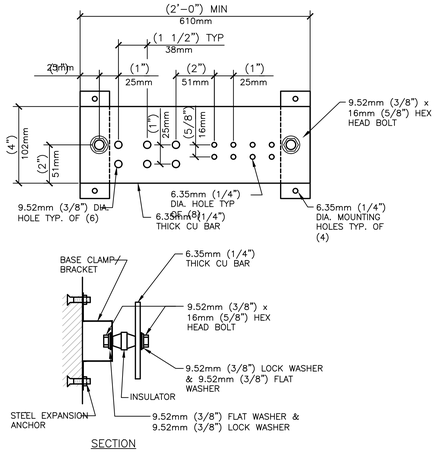

GENERAL NOTES:
1. ALL HARDWARE SHALL BE STAINLESS STEEL.
2. PROVIDE 1 MOUNTING POINT PER 305mm (12") OF BAR LENGTH.
3. HOLES MAY BE ADDED IF REQUIRED.

GROUNDING BAR DETAIL
SCALE: NONE

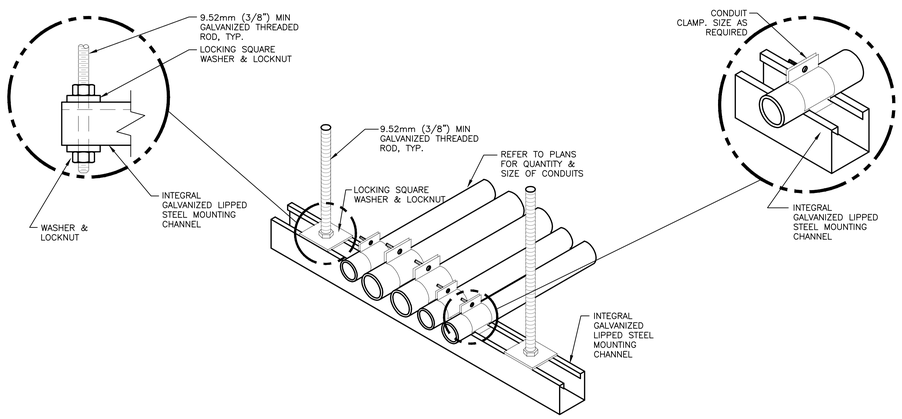

GENERAL NOTES:
1. INTEGRAL GALVANIZED LIPPED STEEL MOUNTING CHANNEL LONGER THAN 915mm (36") SHALL BE INSTALLED WITH A CENTER SUPPORT ROD. SUPPORT RODS SHALL NOT BE GREATER THAN 457mm (18") APART.
2. FASTEN THREADED ROD TO STRUCTURE BY APPROVED METHOD PER SPECIFICATION 26 05 33, RACEWAY AND BOXES FOR ELECTRICAL SYSTEMS. FIELD VERIFY EXACT CONDITIONS.
3. FOR TRAPEZE INSTALLATIONS IN SEISMIC AREAS REFER TO SPECIFICATION SECTION 13 05 41, SEISMIC RESTRAINT REQUIREMENTS FOR NON-STRUCTURAL COMPONENTS.

CONDUIT TRAPESE MOUNTING DETAIL
SCALE: NONE

GENERAL NOTES

SHEET NOTES

PARTITION LEGEND

NEW UNRATED PARTITION

NEW / EXISTING 1 HOUR BARRIER

Revisions: Date:

CONSULTANTS

FIRE PROTECTION: FP&C CONSULTANTS KC, LLC, 1330 BURLINGTON STREET, STE. 200, NORTH KANSAS CITY, MO 64116

SECURITY: GRW, 801 CORPORATE DRIVE, LEXINGTON, KY 40503

CIVIL ENGINEER: HODGES ENGINEERING, 231 SHORELINE DRIVE, MOUNTAIN HOME, AR 72653

STRUCTURAL ENGINEER: BERNHARD TME, BUILDING 2, 1 ALLIED DRIVE, SUITE 260, LITTLE ROCK, AR 72202

ARCHITECT/ENGINEER OF RECORD
A/E
JohnsonDanforth & Associates
2200 N. RODNEY PARHAM ROAD
SUITE 210
LITTLE ROCK, AR 72212
501-404-4811
jda@JohnsonDanforth.com
JDA PROJECT #: 2018.001

STAMP
STATE OF ARKANSAS REGISTERED PROFESSIONAL ENGINEER No. 10206 BRUCE W. BROWN

Office of Construction and Facilities Management
VA U.S. Department of Veterans Affairs

Drawing Title: ELECTRICAL DETAILS
Approved: Project Director
Phase: CONSTRUCTION DOCUMENTS
FULLY SPRINKLERED
Project Title: CONSTRUCT NEW WATER STORAGE FACILITY
Project Number: 564-19-101
Building Number:
Location: FAYETTEVILLE, AR
Drawing Number: E105
Issue Date: 2022.05.12
Checked: BB
Drawn: CD

P:\PRODUCTION\PROJECTS\CRAFTON TULL (CTA)\CTA-014 WASHINGTON COUNTY VA BOOSTER STATION AND TANK\DWG\E05_DETAILS.DWG
7/13/2022 5:03 PM
4/11/2022 2:12:56 PM

VA FORM 08 - 6231

ELECTRONIC SAFETY AND SECURITY SYMBOLS

M T
BIOMETRICS ACCESS CONTROL DEVICE; LETTER INDICATES AS FOLLOWS:
M=MOUNT
C-CEILING D-DESK F-FLUSH H-HIDDEN M-MULLION
P-PEDESTAL R-RACK S-SURFACE W-WALL
T=TECHNOLOGY/TYPE
F-FINGER PRINT H-HAND GEOMETRY I-EYE IRIS
R-EYE RETINA V-VOICE

M T
CARD ACCESS READER; LETTER INDICATES AS FOLLOWS:
M=MOUNT
C-CEILING D-DESK F-FLUSH H-HIDDEN M-MULLION
P-PEDESTAL R-RACK S-SURFACE W-WALL
T=TECHNOLOGY/TYPE
B-BARCODE F-ELEVATOR FLOOR CALL H-ELEVATOR HALL CALL
M-MAG STRIP P-PROXIMITY S-SMART CARD

M
CARD READER WITH KEYPAD; LETTER INDICATES AS FOLLOWS:
M=MOUNT
C-CEILING D-DESK F-FLUSH H-HIDDEN M-MULLION
P-PEDESTAL R-RACK S-SURFACE W-WALL

CENTRAL PROCESSING UNIT

M T
CONTROL PANEL; LETTER INDICATES AS FOLLOWS:
M=MOUNT
C-CEILING D-DESK F-FLUSH H-HIDDEN M-MULLION
P-PEDESTAL R-RACK S-SURFACE W-WALL
T=TECHNOLOGY/TYPE
B-BURGLAR D-DOOR F-FIRE P-PERIMETER

M T
ELECTRONIC LOCK; LETTER INDICATES AS FOLLOWS:
M=MOUNT
C-CEILING D-DESK F-FLUSH H-HIDDEN M-MULLION
P-PEDESTAL R-RACK S-SURFACE W-WALL
T=TECHNOLOGY/TYPE
D-DEADBOLT H-HYBRID L-LATCH SET M-MAGNETIC S-STRIKE

T
EXIT DEVICE; LETTER INDICATES AS FOLLOWS:
T=TECHNOLOGY/TYPE
D-DELAYED EGRESS E-ELECTRIFIED M-MECHANICAL X-HIGH SECURITY

M T
FIBER OPTIC MODULE; LETTER INDICATES AS FOLLOWS:
M=MOUNT
C-CEILING D-DESK F-FLUSH H-HIDDEN M-MULLION
P-PEDESTAL R-RACK S-SURFACE W-WALL
T=TECHNOLOGY/TYPE
R-RECEIVER T-TRANSCEIVER TX-TRANSMITTER

M T
FIELD PANEL; LETTER INDICATES AS FOLLOWS:
M=MOUNT
C-CEILING D-DESK F-FLUSH H-HIDDEN M-MULLION
P-PEDESTAL R-RACK S-SURFACE W-WALL
T=TECHNOLOGY/TYPE
A-ALARM C-CARD READER

M T
INTERCOM; LETTER INDICATES AS FOLLOWS:
M=MOUNT
C-CEILING D-DESK F-FLUSH H-HIDDEN M-MULLION
P-PEDESTAL R-RACK S-SURFACE W-WALL
T=TECHNOLOGY/TYPE
M-MASTER S-SUBSTATION

KEYBOARD

M
KEYPAD DEVICE; LETTER INDICATES AS FOLLOWS:
M=MOUNT
C-CEILING D-DESK F-FLUSH H-HIDDEN M-MULLION
P-PEDESTAL R-RACK S-SURFACE W-WALL

M T
MONITOR; LETTER INDICATES AS FOLLOWS:
M=MOUNT
C-CEILING D-DESK F-FLUSH H-HIDDEN M-MULLION
P-PEDESTAL R-RACK S-SURFACE W-WALL
T=TECHNOLOGY/TYPE
D-DATA G-GRAPHIC M-MULTISCREEN V-VIDEO

M T
MOTION DETECTOR; LETTER INDICATES AS FOLLOWS:
M=MOUNT
C-CEILING D-DESK F-FLUSH H-HIDDEN M-MULLION
P-PEDESTAL R-RACK S-SURFACE W-WALL
T=TECHNOLOGY/TYPE
D-DUAL TECHNOLOGY IR-INFRARED M-MICROWAVE U-ULTRASONIC
X-REQUEST-FOR-EXIT

M T
PUSH BUTTON; LETTER INDICATES AS FOLLOWS:
M=MOUNT
C-CEILING D-DESK F-FLUSH H-HIDDEN M-MULLION
P-PEDESTAL R-RACK S-SURFACE W-WALL
T=TECHNOLOGY/TYPE
B-BELL PUSH D-DURESS P-PANIC R-DOOR RELEASE
X-REQUEST-FOR-EXIT

M T
RECORDER; LETTER INDICATES AS FOLLOWS:
M=MOUNT
C-CEILING D-DESK F-FLUSH H-HIDDEN M-MULLION
P-PEDESTAL R-RACK S-SURFACE W-WALL
T=TECHNOLOGY/TYPE
A-AUDIO D-DIGITAL V-VIDEO

AP
SECURITY ACCESS, ANNUNCIATOR PANEL

SECURITY ACCESS, BUZZER. MTD 1'-6" [457mm] AFF UNLESS OTHERWISE NOTED

SECURITY ACCESS, CONTROL UNIT WITH CLOSED CIRCUIT TELEVISION CAMERA

X
SECURITY ACCESS, GENERIC "X" INDICATES THE TYPE, PROVIDE SCHEDULE OR LEGEND

SECURITY ACCESS, HORN OR SIREN

DPA
SECURITY ACCESS, DOOR PROP/EXIT ALARM

SECURITY ACCESS, OUTDOOR MICROWAVE TRANSMISSION UNIT

SECURITY ACCESS, PANIC ALARM

M PTZ
SECURITY ACCESS, VIDEO CAMERA WITH LENS
M = MOTION DETECTOR
PZ = MOTION DETECTOR WITH PAN AND ZOOM
PTZ= MOTION DETECTOR WITH PAN, TILT, AND ZOOM

360°
SECURITY ACCESS, MULTI-SENSOR/PANORAMIC VIEW, ANGLE OF VIEW

40°
SECURITY ACCESS, VIDEO CAMERA WITH LENS, ANGLE OF VIEW

SECURITY ACCESS, VOLUMETRIC SENSOR

VIDEO CONTROL KEYBOARD

VIDEO MOTION DETECTOR

SECURITY ACCESS, SENSOR, BURIED VEHICULAR

SECURITY ACCESS, SWITCH, BALANCED MAGNETIC CONTROL

SECURITY ACCESS, TELEPHONE HANDSET

SECURITY ACCESS, INTERFACE RELAY SWITCH

ELECTRONIC SAFETY AND SECURITY ABBREVIATIONS

1PH	SINGLE-PHASE
1P	SINGLE POLE
2/C	TWO-CONDUCTOR
3/C	THREE-CONDUCTOR
3PH	THREE-PHASE
4/C	FOUR-CONDUCTOR
4W	FOUR-WIRE
A/E	ARCHITECT/ENGINEER
AAP	ALARM ANNUNCIATOR PANEL
AC	ALTERNATING CURRENT OR ARMORED CABLE
ADA	AMERICANS WITH DISABILITIES ACT
ADDL	ADDITIONAL
ADJ	ADJACENT, ADJOINING
ADO	AUTOMATIC DOOR OPENER
AFF	ABOVE FINISHED FLOOR
AFG	ABOVE FINISHED GRADE
AHJ	AUTHORITY HAVING JURISDICTION
ALT	ALTERNATE
ATS	AUTOMATIC TRANSFER SWITCH
AUTO	AUTOMATIC
AV	AUDIO VISUAL
BAT	BATTERY
BFF	BELOW FINISH FLOOR
BLDG	BUILDING
BMS	BALANCED MAGNETIC SWITCH
BPIP	BOILER PLANT INSTRUMENTATION PANEL
C	CONDUIT
CATV	COMMUNITY ANTENNA TELEVISION
CCR	CONTROL CONTACTOR
CD	CONSTRUCTION DOCUMENTS
CF	CONTRACTOR FURNISHED
CF/CI	CONTRACTOR FURNISHED/CONTRACTOR INSTALLED
CF/OI	CONTRACTOR FURNISHED/OWNER INSTALLED
CFE	CONTRACTOR FURNISHED EQUIPMENT
CLG	CEILING
CMU	CONCRETE MASONRY UNIT
COAX	COAX CABLE
COMM	COMMUNICATION
CONT	CONTINUE
CONTR	CONTRACTOR
CTV	CABLE TELEVISION
CU	COPPER
CU FT	CUBIC FEET
DB	DECIBEL OR DIRECT BURIAL
DC	DIRECT CURRENT
DEG C	DEGREES CELSIUS
DEG F	DEGREES FAHRENHEIT
DEMO	DEMOLITION
DIAG	DIAGRAM
DRSW	DOOR SWITCH
EC	EMPTY CONDUIT
EG	EQUIPMENT GROUND
EL	ELEVATION
ELEC	ELECTRIC OR ELECTRICAL
ELEV	ELEVATOR
EMER	EMERGENCY
EMI	ELECTROMAGNETIC INTERFERENCE
EMT	ELECTRICAL METALLIC TUBING
EPO	EMERGENCY POWER OFF
ESMT	EASEMENT
EXIST	EXISTING
FACP	FIRE ALARM CONTROL PANEL
FLEX	FLEXIBLE METALLIC CONDUIT
FT	FEET OR FOOT
GND	GROUND
GEN	GENERATOR
GTB	GROUND TERMINAL BOX
HOA	HAND-OFF-AUTOMATIC
HZ	HERTZ
IDS	INTRUSION DETECTION SYSTEM
IMC	INTERMEDIATE METAL CONDUIT
IR	INFRARED
J-BOX	JUNCTION BOX
LF	LINEAR FEET (FOOT)
LTNG	LIGHTNING
LV	LOW VOLTAGE
MATV	MASTER ANTENNA TELEVISION SYSTEM
MAX	MAXIMUM
MECH	MECHANICAL
MH	MANHOLE
MIN	MINIMUM
MT	MOUNT
MTD	MOUNTED
MTG	MOUNTING
NA	NOT APPLICABLE
NEC	NATIONAL ELECTRICAL CODE
N	NEUTRAL
NIC	NOT IN CONTRACT
NTS	NOT TO SCALE
OC	ON CENTER
OD	OUTSIDE DIAMETER
P	POLE
PA	PUBLIC ADDRESS
PACS	PHSYICAL ACCESS CONTROL SYSTEM
PB	PANELBOARD, PULL BOX, OR PUSHBUTTON
PED	PEDESTAL
PEND	PENDANT
PF	POWER FACTOR
PH	PHASE
PVC	POLYVINYL CHLORIDE (PLASTIC)
PWR	POWER
RCP	REFLECTED CEILING PLAN
RECPT	RECEPTACLE
REX	REQUEST-FOR-EXIT
RGS	RIGID GALVANIZED STEEL
RM	ROOM
REQD	REQUIRED
SF	SQUARE FOOT (FEET)
SI	INTERNATIONAL SYSTEM OF UNITS
SSTV	SECURITY SURVEILLANCE TELEVISION
SW	SWITCH
TEL	TELEPHONE
TP	TWISTED PAIR
TPS	TWISTED PAIR SHIELDED
TTB	TELEPHONE TERMINAL BOARD
TV	TELEVISION
TYP	TYPICAL
UGND	UNDERGROUND
UL	UNDERWRITERS LABORATORY
UON	UNLESS OTHERWISE NOTED
UPS	UNINTERRUPTIBLE POWER SUPPLY
V	VOLT
VASS	VIDEO ASSESSMENT AND SURVEILLANCE SYSTEM
WP	WEATHERPROOF

ELECTRONIC SAFETY AND SECURITY GENERAL NOTES:

A. REFER TO E-001 FOR ELECTRICAL LEGEND, GENERAL NOTES, AND ABBREVIATIONS.

B. THE MINIMUM STANDARD FOR ALL WORK SHALL BE THE APPLICABLE CODES REFERENCED ON LIFE SAFETY PLAN, SHEET AE002. WHENEVER THE ENGINEERS DESIGN REQUIRES A HIGHER STANDARD, THE HIGHER STANDARD DESIGN SHOWN SHALL BE FOLLOWED.

C. THE CONTRACTOR SHALL PROVIDE ALL MATERIALS, LABOR, EQUIPMENT, AND TOOLS TO EXECUTE WORK DETAILED BY THE DRAWINGS AND PROJECT SPECIFICATIONS, AND SHALL PROVIDE A COMPLETELY OPERATIONAL CAMERA SURVEILLANCE/ELECTRICAL SYSTEM UPON COMPLETION OF THE PROJECT.

D. THE CONTRACTOR IS RESPONSIBLE FOR COORDINATION OF THE ELECTRICAL WORK WITH THAT OF OTHER TRADES. THE ELECTRICIAN IS RESPONSIBLE FOR MAKING ALL ELECTRICAL CONNECTIONS TO THE EQUIPMENT REQUIRING ELECTRICAL POWER, REGARDLESS OF WHO FURNISHED OR INSTALLED IT.

E. THE CONTRACTOR IS RESPONSIBLE FOR DAILY CLEANUP OF ALL WORK AREAS DURING TERM PROJECT; AND FOR RETURNING TO ORIGINAL CONDITION UPON COMPLETION OF ALL WORK INDICATED.

F. ALL ELECTRICAL WORK SHALL BE WARRANTED FOR ONE YEAR FROM THE DATE OF INSPECTION PUNCHLIST COMPLETION.

G. ALL MATERIALS USED SHALL BE NEW AND UL LISTED WHERE A LISTING EXISTS FOR THE PRODUCT.

H. ALL WIRING SHALL BE COPPER. ALUMINUM WIRING SHALL NOT BE ALLOWED. MINIMUM WIRE SIZE SHALL BE #12 AWG, CONDUCTORS SHALL BE THWN IN SMALLER SIZES OR MAY BE THW IN LARGER SIZES IF ECONOMICAL, AND SHALL BE RATED 600 VOLTS. RUNS OF 120 VOLTS OVER 50 FEET SHALL UTILIZE #10 AWG TO PREVENT EXCESSIVE VOLTAGE DROP. CONDUCTORS SHALL BE COLOR CODED AS REQUIRED BY THE NEC.

I. WIRING DEVICES SHALL BE SPEC GRADE, RATED 20 AMPERES. DEVICE PLATES SHALL BE SMOOTH FINISH IVORY NYLON.

J. CONDUIT CONCEALED IN WALLS OR CEILINGS SHALL BE EMT WITH TAMPER PROOF SCREWS, AND EXPOSED CONDUITS SHALL BE EMT WITH TAMPER PROOF SCREWS. ALL CONDUITS SHALL HAVE AN EXTRA CONDUCTOR PULLED FOR GROUNDING. ALL CONDUIT SHALL BE CONCEALED, UNLESS SPECIFICALLY NOTED OTHERWISE. ALL CONDUIT FITTINGS SHALL BE COMPRESSION TYPE. THE LAST PIECE OF CONDUIT INSTALLED TO EQUIPMENT SHALL BE FLEXIBLE METAL CONDUIT. MINIMUM CONDUIT SIZE SHALL BE 3/4 INCH. CONDUITS SHALL BE INSTALLED AT RIGHT ANGLES TO CEILINGS, WALLS, AND STRUCTURAL MEMBERS. CONDUIT SHALL BE SUPPORTED BY PIPE STRAPS, WALL BRACKETS, OR HANGERS. SPACER BACK CLAMPS SHALL BE UTILIZED IN MOIST OR WET AREAS.

K. HUBS SHALL BE USED ON BOXES WHERE CONDUIT ENTERS THE TOP AND IS EXPOSED TO WEATHER. SEALING LOCKNUTS MAY BE USED FOR SIDE ENTRY CONDUITS IN THIS APPLICATION.

L. CONDUITS SHALL BE SEALED WHERE THEY ENTER THE BUILDING TO PREVENT GROUNDWATER ENTRY.

M. BOXES SHALL BE INSTALLED SUCH THAT THEY ARE SUPPORTED BY THE STRUCTURE. BOXES MAY NOT BE SUPPORTED BY CONDUIT.

N. IN THE ABSENCE OF DETAILS HEREIN ON USE OR INSTALLATION OF A PARTICULAR MATERIAL OR DEVICE, CODES AND MANUFACTURERS RECOMMENDATIONS SHALL BE USED AS GUIDANCE.

O. IT IS HIGHLY RECOMMENDED THAT THE CONTRACTOR VISIT THE SITE PRIOR TO BIDDING, TO BECOME FAMILIAR WITH EXISTING CONDITIONS TO BE ENCOUNTERED DURING CONSTRUCTION.

P. NOT ALL SYMBOLS INDICATED IN THE LEGEND, OR LISTED ABBREVIATIONS, APPEAR ON THE DRAWINGS. COORDINATE WORK ACCORDINGLY. COMPLY WITH SPECIFICATIONS AND GENERAL NOTES AS APPLICABLE.

Q. ALL WORK SHALL COMPLY WITH LATEST EDITION OF NFPA70, NFPA72, NFPA99, NFPA101, NEC & ALL FEDERAL, STATE & LOCAL REGULATIONS.

R. ALL PENETRATIONS THROUGH FLOORS, RATED WALLS AND PARTITIONS SHALL BE SEALED WITH UL APPROVED FIRESTOPPING/SEALANT MATERIAL TO MAINTAIN THE EXISTING FIRE RATING FOR THE ASSEMBLY.

S. AN EQUIPMENT GROUNDING CONDUCTOR SHALL BE INSTALLED WITH ALL FEEDER AND BRANCH CIRCUITS. SIZE IN ACCORDANCE WITH NFPA 70 ARTICLE 250.

T. COORDINATE INSTALLATION AND FINAL LOCATION OF DATA OUTLETS WITH THE VA.

U. IDENTIFICATION:
RECEPTACLES CONNECTED TO THE ESSENTIAL ELECTRICAL SYSTEM SHALL BE RED WITH A WHITE LABEL CONTAINING THE WORD "EMERGENCY" IN BLACK ON THE TOP OF THE PLATE AND A WHITE LABEL WITH THE CIRCUIT NUMBER IN BLACK ON THE BOTTOM. "NORMAL" RECEPTACLES SHALL HAVE A WHITE LABEL WITH THE CIRCUIT NUMBER IN BLACK AT THE BOTTOM OF THE PLATE.

V. PROVIDE WIRE MARKERS TO IDENTIFY CABLES FOR ALL SYSTEMS AT THE ORIGIN, PULL BOXES, AND TERMINATION POINTS. LABELS SHALL BE SELF ADHESIVE OR HEAT SHRINK TYPE AND BE PERMANENTLY AFFIXED TO THE WIRE BEING LABELED.

W. NO LIVE WORK WILL BE ALLOWED. EVERY CIRCUIT SHALL BE LOCKED-OUT AND TAGGED-OUT BEFORE COMMENCING WORK.

X. NO "J" HOOKS. (OR ANY OTHER TYPE OF WIRE "HANGING" SYSTEM IS PERMITTED WITHIN THE SCOPE OF THIS WORK FOR THE ENTIRE LENGTH OF WIRING RUNS INDICATED).

Y. NEW CONDUIT RUNS SHOWN BY PLANS ARE DIAGRAMMATIC IN NATURE. CONTRACTOR SHALL INSTALL NEW CONDUITS IN CONCEALED LOCATIONS UNLESS SPECIFICALLY NOTED OTHERWISE.

Z. MOST CONDUITS TO BE INSTALLED ABOVE EXISTING SUSPENDED ACOUSTICAL TILE (SAT) CEILINGS IN A MANNER THAT MINIMIZES DAMAGE TO EXISTING SAT CEILINGS. REFER TO ELECTRICAL GENERAL NOTES SHEET E-001.

AA. TOTAL CONDUIT LENGTHS MAY NOT EXCEED 295'-0" FROM CAMERA LOCATION TO I.T. ROOM CONNECTION POINT.

AB. NEW CONDUITS SHALL BE SECURED TO EXISTING WALL CONSTRUCTION, EXISTING STRUCTURAL SYSTEM OR EXISTING PLASTER FINISHES CONCEALED FROM VIEW (ABOVE SAT).

AC. CONTRACTOR SHALL TAKE MEASURES NECESSARY TO AVOID CONFLICTS WITH EXISTING MECHANICAL, ELECTRICAL AND PLUMBING (MEP) INFRASTRUCTURE AT NO ADDITIONAL COST TO VAMC.

AD. VA INFORMATION TECHNOLOGY/SYSTEMS PERSONNEL WILL USE THE CONTRACTOR'S COMPLETED, LABELED AND INDEX LISTED CABLING TO PHYSICALLY MAKE THE FINAL CONNECTION TO VAMC OWNED SWITCHES INSIDE OF IT ROOMS.

AE. INTRUSION DETECTION SYSTEM (IDS), DURESS/PANIC SYSTEM, PHYSICAL ACCESS CONTROL SYSTEM (PACS), AND SECURITY SURVEILLNACE TELEVISION (SSTV) DESIGN TO FOLLOW VA PSRDM - CHAPTER 10, VA TDM 2016, AND NEC.

7/12/2022 6:52:53 PM
G:\5020-JohnsonDanforth\02-VHSO New Water Storage Facility\Working Drawings\Revit\Elec564-19-101_Fayetteville Water Storage_TY-CENTRAL-R22.rvt

Revisions: Date:

CONSULTANTS

FPC & CONSULTANTS
FIRE PROTECTION
FP&C CONSULTANTS KC, LLC
1330 Burlington Street, Ste. 200
North Kansas City, MO 64116

GRW engineering | architecture | geospatial
SECURITY
GRW
801 CORPORATE DRIVE
LEXINGTON, KY 40503

Insight ENGINEERING
MEP ENGINEER
INSIGHT ENGINEERING, PLLC
201 S. CHESTER, SUITE B
LITTLE ROCK, AR 72201

Bernhard TME Engineering
STRUCTURAL ENGINEER
BERNHARD TME
BUILDING 2, 1 ALLIED DRIVE
SUITE 260
LITTLE ROCK, AR 72202

ARCHITECT/ENGINEER OF RECORD
A/E
JohnsonDanforth & Associates
2200 N. RODNEY PARHAM ROAD
SUITE 210
LITTLE ROCK, AR 72212
501-404-4811
jda@JohnsonDanforth.com
JDA PROJECT #: 2018.001

STAMP
COMMUNICATIONS SECURITY DESIGNER
BICSI
PATRICK BAISDEN
BICSI ID# 363075
EXPIRES 12-31-22
2022-07-15
* RODD *

Office of Construction and Facilities Management
VA U.S. Department of Veterans Affairs

Drawing Title: SECURITY ELECTRONICS SYMBOLS AND GENERAL NOTES	Phase: CONSTRUCTION DOCUMENTS	Project Title: CONSTRUCT NEW WATER STORAGE FACILITY	Project Number: 564-19-101
			Building Number:
Approved: Project Director	FULLY SPRINKLERED	Location: FAYETTEVILLE, AR	Drawing Number: TY001
		Issue Date: 2022.07.15 / Checked: PJB / Drawn: PJB	

VA FORM 08 - 6231

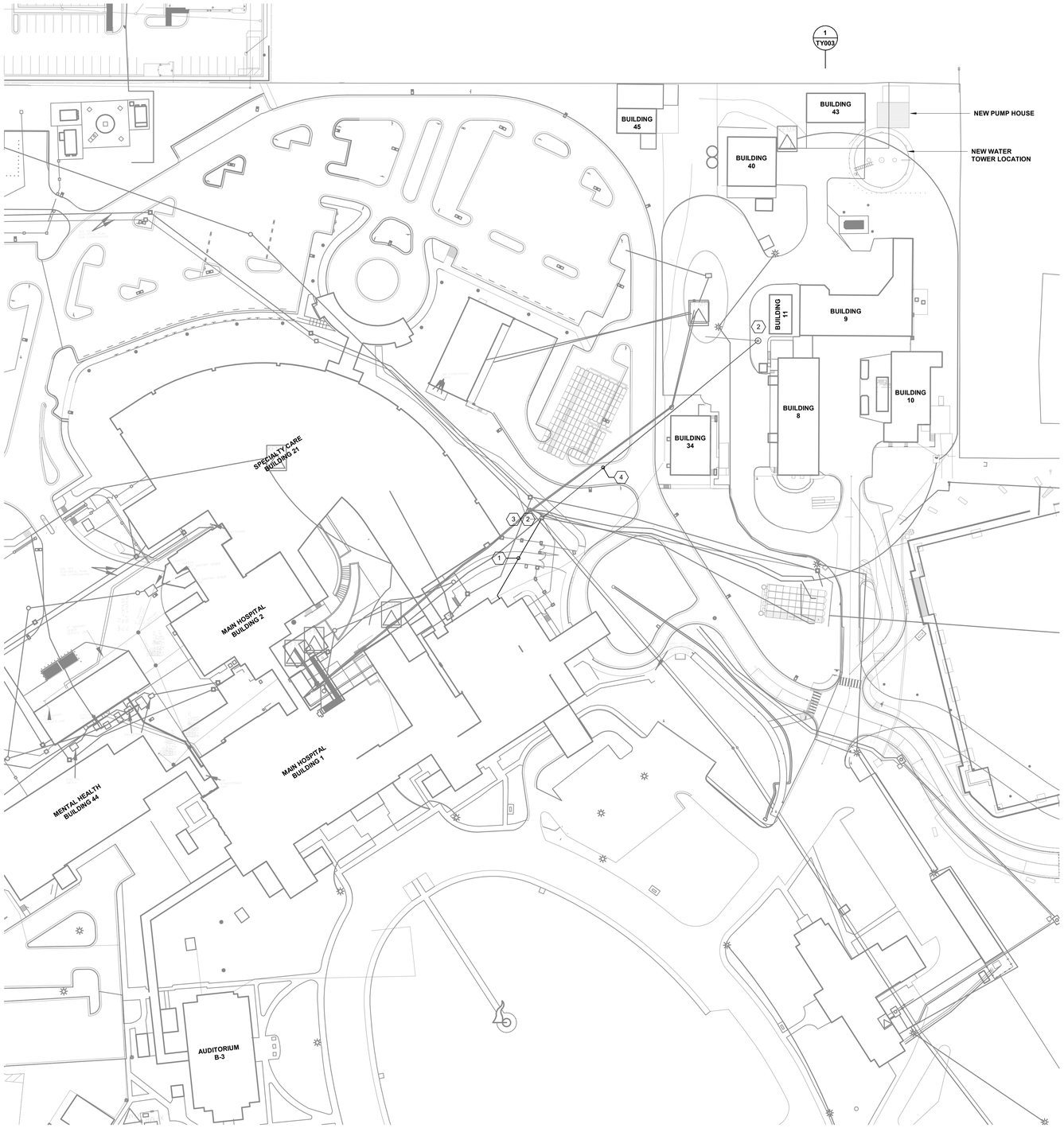

1 SECURITY ELECTRONICS - SITE PLAN

SCALE: 1" = 50'

GENERAL NOTES:

1. LOCATE ALL EXISTING UNDERGROUND UTILITIES FOR ALL UNDERGROUND WORK PRIOR TO EXCAVATION OR TRENCHING. HAND DIG WITHIN 10' OF UTILITY OF CROSSING WITH NEW WORK.
2. MINIMUM BURY FOR ALL SITE CONDUITS SHALL BE 24", UNLESS OTHERWISE NOTED. CONTRACTOR IS RESPONSIBLE FOR ALL SITE TRENCHING AND BACKFILL.
3. REFER TO CIVIL DRAWINGS FOR ADDITIONAL INFORMATION.
4. REFER TO SHEET TY503 FOR DUCT BANK DETAILS.
5. REFER TO SHEET TY602 FOR SSTV RISER DIAGRAM.

SHEET KEYNOTES:

1. 4"C WITH 6-STRAND SINGLEMODE (OS2) OPTICAL FIBER (ASSOCIATED WITH SSTV) FROM SPECIAL SYSTEMS DATA ROOM 147 (BUILDING 1) TO EXISTING MANHOLE. REFER TO SHEET TY201 FOR CONTINUATION. INSTALL OPTICAL FIBER INSIDE A 1" INNERDUCT.
2. EXISTING MANHOLE. CONTRACTOR SHALL PROVIDE A NEW COMPATIBLE LOCKABLE COVER.
3. CORE DRILL EXISTING MANHOLE AS REQUIRED FOR NEW CONDUIT INSTALLATION. PROVIDE A WATER TIGHT SEAL FOR THE CONDUIT PENETRATION. REFER TO DETAIL 5 ON SHEET TY503.
4. INSTALL 6-STRAND SINGLEMODE (OS2) OPTICAL FIBER (ASSOCIATED WITH SSTV) WITHIN AN EXISTING CONDUIT BETWEEN THE TWO (2) EXISTING MANHOLES. REFER TO CONTINUATION ON SHEET TY003. INSTALL THE OPTICAL FIBER INSIDE A 1" INNERDUCT.

G:\5020-JohnsonDanforth\03-VHSO New Water Storage Facility\Working Drawings\Rev\Elec\564-19-101_Fayetteville Water Storage_TY-CENTRAL-R22.rvt

7/12/2022 6:52:55 PM

Revisions: Date:

CONSULTANTS

FP&C CONSULTANTS
FIRE PROTECTION
FP&C CONSULTANTS KC, LLC
1330 Burlington Street, Ste. 200
North Kansas City, MO 64116

GRW engineering | architecture | geospatial
SECURITY
GRW
801 CORPORATE DRIVE
LEXINGTON, KY 40503

Insight ENGINEERING
MEP ENGINEER
INSIGHT ENGINEERING, PLLC
201 S. CHESTER, SUITE B
LITTLE ROCK, AR 72201

Bernhard TME Engineering
STRUCTURAL ENGINEER
BERNHARD TME
BUILDING 2, 1 ALLIED DRIVE
SUITE 260
LITTLE ROCK, AR 72202

ARCHITECT/ENGINEER OF RECORD

A/E
JohnsonDanforth & Associates
2200 N. RODNEY PARHAM ROAD
SUITE 210
LITTLE ROCK, AR 72212
501-404-4811
jda@JohnsonDanforth.com
JDA PROJECT #: 2018.001

STAMP
COMMUNICATIONS SECURITY, EVALUATION & DESIGNER
Bicsi
PATRICK BAISDEN
BICSI ID# 363075
EXPIRES 12-31-22
2022-07-15
RCDD

Office of Construction and Facilities Management

VA U.S. Department of Veterans Affairs

Drawing Title: SECURITY ELECTRONICS SITE PLAN	Phase: CONSTRUCTION DOCUMENTS	Project Title: CONSTRUCT NEW WATER STORAGE FACILITY	Project Number: 564-19-101
Approved: Project Director	FULLY SPRINKLERED	Location: FAYETTEVILLE, AR	Building Number
		Issue Date: 2022.07.15 / Checked: PJB / Drawn: PJB	Drawing Number: TY002

VA FORM 08 - 6231

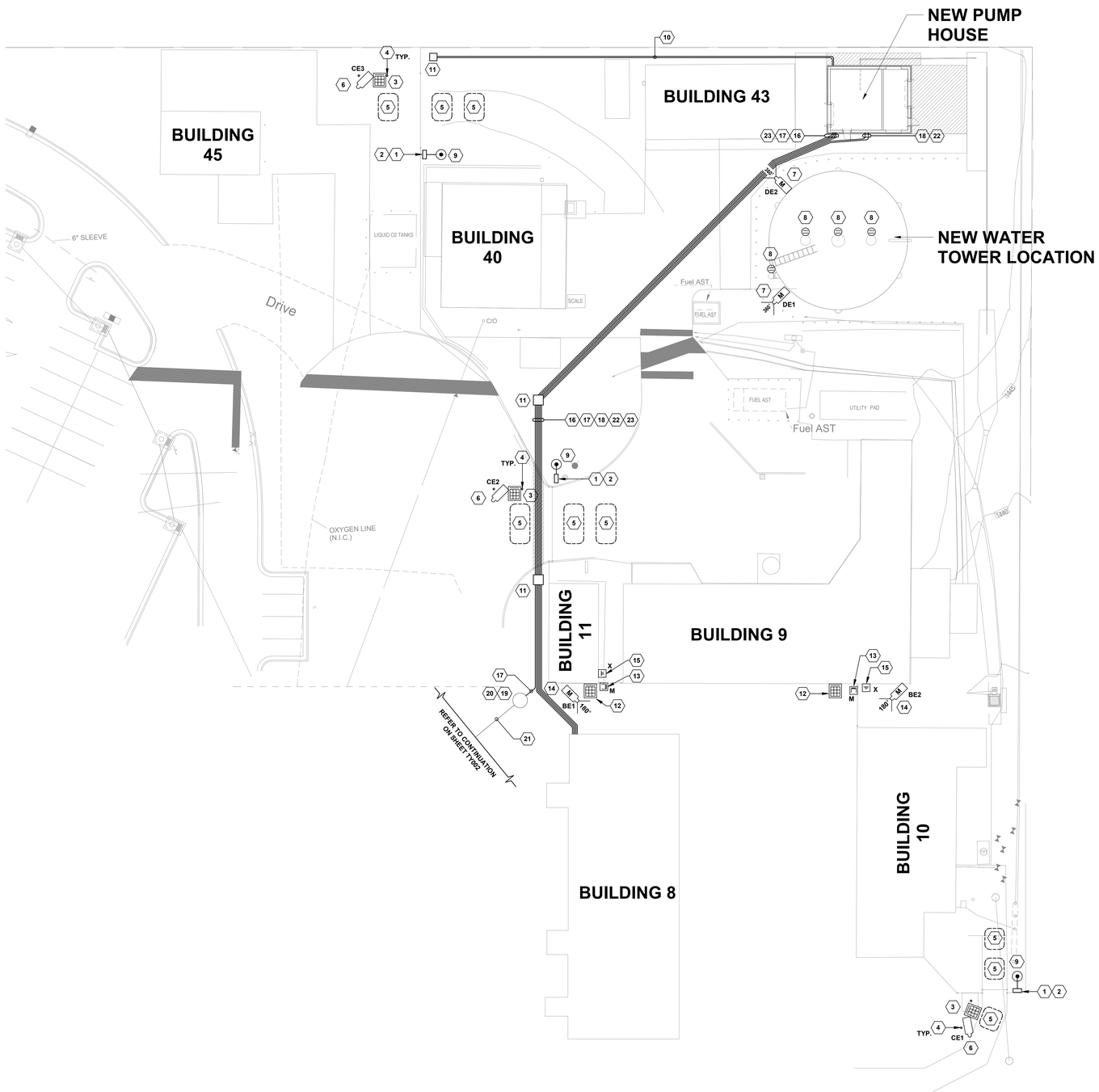

PLAN NORTH

1 SECURITY ELECTRONICS - ENLARGED SITE PLAN

1" = 20'-0"

GENERAL NOTES:

1. LOCATE ALL EXISTING UNDERGROUND UTILITIES FOR ALL UNDERGROUND WORK PRIOR TO EXCAVATION OR TRENCHING. HAND DIG WITHIN 10' OF UTILITY CROSSING WITH NEW WORK.
2. MINIMUM BURY FOR ALL SITE CONDUITS SHALL BE 24", UNLESS OTHEWISE NOTED. CONTRACTOR IS RESPONSIBLE FOR ALL SITE TRENCHING AND BACKFILL.
3. REFER TO CIVIL DRAWINGS FOR ADDITIONAL INFORMATION.
4. REFER TO SHEET TY501 FOR PACS DETAILS.
5. REFER TO SHEET TY502 FOR SSTV DETAILS.
6. REFER TO SHEET TY503 FOR DUCT BANK DETAILS.
7. REFER TO SHEET TY601 FOR PACS RISER DIAGRAM.
8. REFER TO SHEET TY602 FOR SSTV RISER DIAGRAM.
9. REFER TO SHEET TY603 FOR IDS RISER DIAGRAM.

SHEET KEYNOTES:

1. SLIDE GATE OPERATOR.
2. CONTRACTOR SHALL PROVIDE ALL CONDUIT/CABLING REQUIRED FOR SAFETY PHOTO EYE SENSORS, VEHICULAR LOOPS, ETC. COORDINATE WITH SLIDE GATE MANUFACTURER.
3. CARD READER PEDESTAL. REFER TO PEDESTAL DETAILS ON SHEET TY504.
4. PROVIDE PROTECTIVE BOLLARD. SIMILAR TO DETAIL F1 ON SHEET CU105.
5. INSTALL OBSTRUCTION LOOP (OR RESET LOOP). CONTRACTOR TO PROVIDE 1"C TO SLIDE GATE OPERATOR.
6. PEDESTAL MOUNTED CAMERA WITH NEMA 4X SURVEILLANCE CABINET. REFER TO CAMERA PEDESTAL DETAIL ON SHEET TY502.
7. PROVIDE 360-DEGREE PENDANT MOUNT EXTERIOR CAMERA WITH TELESCOPIC PARAPET MOUNT AND POLE. SEE DETAIL ON SHEET TY502.
8. PROVIDE CONTACT SENSORS FOR EACH HATCH/MANHOLE FOR THE WATER STORAGE TANK. PROVIDE CONDUIT/WIRING TO IDS CONTROL PANEL.
9. 3/4" X 10' GROUND ROD WITH #6 AWG COPPER GROUND CONDUCTOR. PROVIDE 1" PVC SLEEVE. TERMINATE ON GROUND LUG WITHIN OPERATOR.
10. TWO (2) 4"C WITH PULL STRING FROM SECURITY CLOSET 102 (PUMP HOUSE BUILDING) TO COMMUNICATIONS HANDHOLE.
11. PROVIDE COMMUNICATIONS HANDHOLE WITH LOCKABLE COVER. SIZE HANDHOLE ACCORDING TO NEC 314.28 AND 314.30.
12. CARD READER W/ KEYPAD. CONTRACTOR TO MOUNT ON BUILDING OR PROVIDE PEDESTAL SIMILAR TO DETAILS ON SHEET TY504.
13. PEDESTRIAN GATE WITH MAGNETIC LOCK. PROVIDE CONDUIT/WIRING BACK TO POWER SUPPLY AND PACS DOOR CONTROLLER. REFER TO DETAIL 4 ON SHEET TY501.
14. EXTERIOR WALL-MOUNTED CAMERA WITH NEMA 4X SURVEILLANCE CABINET. MOUNT AT 10'-0" AFG. REFER TO DETAIL 4 ON SHEET TY502.
15. REX PUSHBUTTON. CONTRACTOR TO MOUNT ON BUILDING OR PROVIDE PEDESTAL SIMILAR TO DETAILS ON SHEET TY504.
16. 4"C WITH 6-STRAND SINGLEMODE (OS2) OPTICAL FIBER (ASSOCIATED WITH PACS) FROM EQUIPMENT ROOM 008 (BUILDING 8) TO SECURITY CLOSET 102 (PUMP HOUSE BUILDING). INSTALL THE OPTICAL FIBER INSIDE A 1" INNERDUCT.
17. 4"C WITH 6-STRAND SINGLEMODE (OS2) OPTICAL FIBER (ASSOCIATED WITH SSTV) FROM EXISTING MANHOLE TO SECURITY CLOSET 102 (PUMP HOUSE BUILDING). INSTALL THE OPTICAL FIBER INSIDE A 1" INNERDUCT.
18. 2"C WITH FIRE ALARM CABLING FROM BREAK ROOM 006 (BUILDING 8) TO EQUIPMENT ROOM 101 (PUMP HOUSE BUILDING). REFER TO FIRE ALARM DRAWINGS FOR ADDITIONAL INFORMATION.
19. EXISTING MANHOLE. CONTRACTOR SHALL PROVIDE A NEW COMPATIBLE LOCKABLE COVER.
20. CORE DRILL EXISTING MANHOLE AS REQUIRED FOR NEW CONDUIT INSTALLATION. PROVIDE A WATER TIGHT SEAL FOR THE CONDUIT PENETRATON. REFER TO DETAIL 5 ON SHEET TY503.
21. INSTALL 6-STRAND SINGLEMODE (OS2) OPTICAL FIBER (ASSOCIATED WITH SSTV) WITHIN AN EXISTING CONDUIT BETWEEN EXISTING MANHOLES. REFER TO CONTINUATION ON SHEET TY002. INSTALL THE OPTICAL FIBER INSIDE A 1" INNERDUCT.
22. 4"C WITH BUIDLING AUTOMATION SYSTEM (BAS) CABLING FROM BREAK ROOM 006 (BUILDING 8) TO EQUIPMENT ROOM 101 (PUMP HOUSE BUILDING). REFER TO ELECTRICAL DRAWINGS FOR ADDITIONAL INFORMATION.
23. TWO (2) SPARE 4"C WITH PULL STRING FROM EQUIPMENT ROOM 008 (BUILDING 8) TO SECURITY CLOSET 102 (PUMP HOUSE BUILDING).

Revisions: Date:

CONSULTANTS

FIRE PROTECTION
FP&C CONSULTANTS KC, LLC
1330 Burlington Street, Ste. 200
North Kansas City, MO 64116

SECURITY
GRW
801 CORPORATE DRIVE
LEXINGTON, KY 40503

MEP ENGINEER
INSIGHT ENGINEERING, PLLC
201 S. CHESTER, SUITE B
LITTLE ROCK, AR 72201

STRUCTURAL ENGINEER
BERNHARD TME
BUILDING 2, 1 ALLIED DRIVE
SUITE 260
LITTLE ROCK, AR 72202

ARCHITECT/ENGINEER OF RECORD
A/E
JohnsonDanforth & Associates
2200 N. RODNEY PARHAM ROAD
SUITE 210
LITTLE ROCK, AR 72212
501-404-4811
jda@JohnsonDanforth.com
JDA PROJECT #: 2018.001

STAMP
PATRICK BAISDEN
BICSI ID# 363075
EXPIRES 12-31-23
2022-07-15

Office of Construction and Facilities Management
VA U.S. Department of Veterans Affairs

Drawing Title: SECURITY ELECTRONICS ENLARGED SITE PLAN
Phase: CONSTRUCTION DOCUMENTS
Project Title: CONSTRUCT NEW WATER STORAGE FACILITY
Project Number: 564-19-101
Building Number:
Approved: Project Director
FULLY SPRINKLERED
Location: FAYETTEVILLE, AR
Issue Date: 2022.07.15
Checked: PJB
Drawn: PJB
Drawing Number: TY003

G:\5020-JohnsonDanforth\02-VHSO New Water Storage Facility\Working Drawings\Revit\Elec\564-19-101_Fayetteville Water Storage_TY-CENTRAL-R22.rvt
7/12/2022 6:32:57 PM

VA FORM 08 - 6231

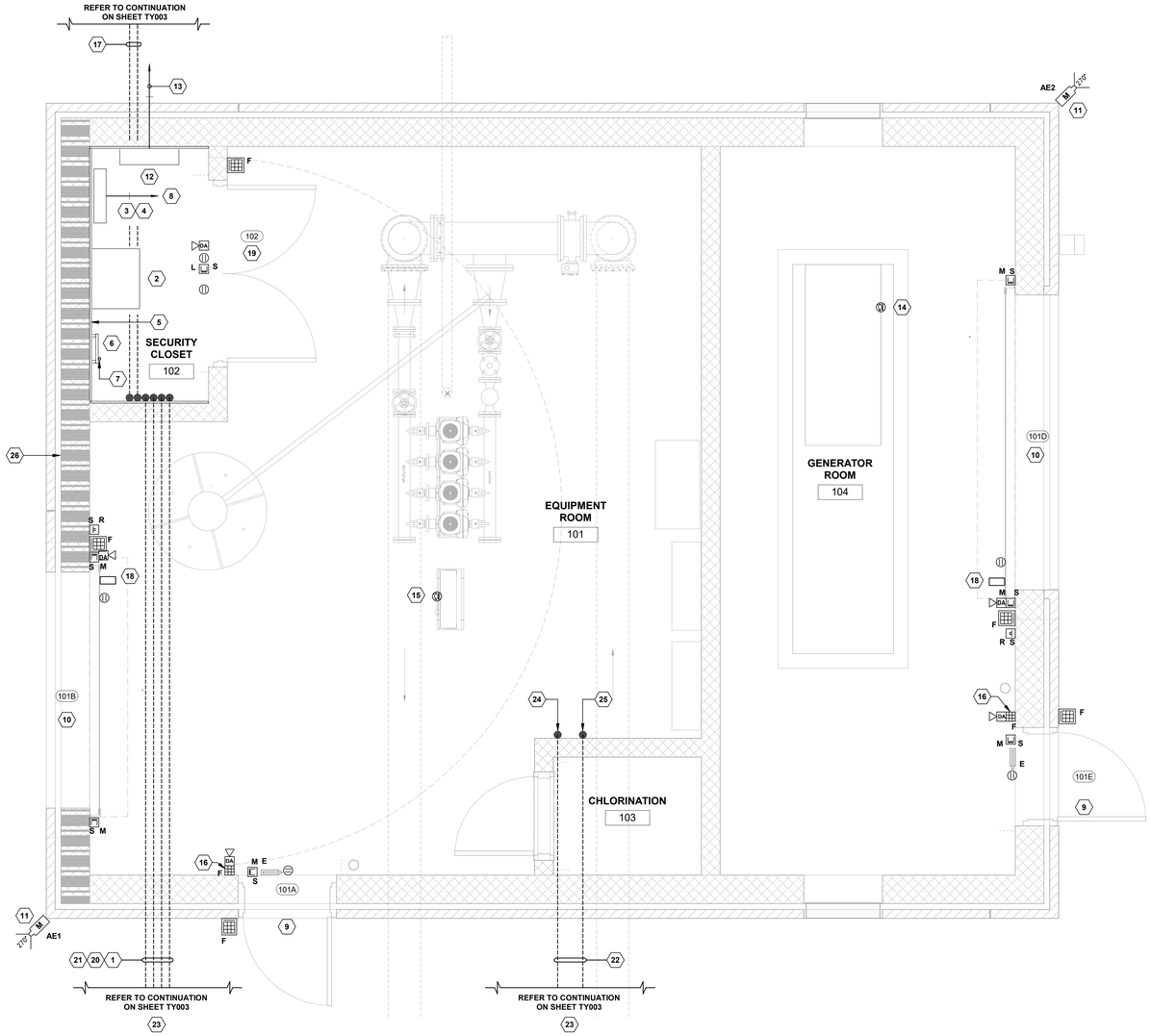

1 SECURITY ELECTRONICS - PUMP HOUSE FLOOR PLAN

1/2" = 1'-0"

PLAN NORTH

GENERAL NOTES:

1. ALL SECURITY ELECTRONICS CABLING SHALL BE INSTALLED IN CONDUIT.
2. REFER TO SHEET TY501 FOR PACS DETAILS.
3. REFER TO SHEET TY502 FOR SSTV DETAILS.
4. REFER TO SHEET TY601 FOR PACS RISER DIAGRAM.
5. REFER TO SHEET TY602 FOR SSTV RISER DIAGRAM.
6. REFER TO SHEET TY603 FOR IDS RISER DIGRAM.
7. REFER TO SHEET TY603 FOR THE SECURITY LAN FUNCTIONAL SCHEMATIC.
8. COORDINATE WITH DOOR HARDWARE INSTALLER FOR ALL REQUIRED ACCESS CONTROL CONNECTIONS AND ROUGH-IN REQUIREMENTS.

SHEET KEYNOTES:

1. 4"C WITH 6-STRAND SINGLEMODE (OS2) OPTICAL FIBER (ASSOCIATED WITH PACS) FROM EQUIPMENT ROOM 008 IN BUILDING 8 TO SECURITY CLOSET 102. INSTALL THE OPTICAL FIBER INSIDE A 1" INNDERDUCT.
2. SECURITY ELECTRONICS EQUIPMENT RACK. REFER TO SECURITY LAN FUNCTIONAL SCHEMATIC ON SHEET TY603 FOR ADDITIONAL INFORMATION.
3. PHYSICAL ACCESS CONTROL SYSTEM (PACS) DOOR CONTROLLER. REFER TO PACS RISER DIAGRAM ON SHEET TY601 AND SPECIFICATION SECTION 281300.
4. POWER SUPPLIES FOR THE PACS DOOR CONTROLLER AND ASSOCIATED MAGNETIC LOCKS.
5. 3/4" PLYWOOD TREATED WITH FLAME RETARDANT / NONCONDUCTIVE PAINT (DO NOT COVER FIRE STAMP). INSTALL PLYWOOD FROM 6" TO 8'-6" AFF. PROVIDE ON ALL WALLS.
6. TELECOMMUNICATIONS GROUNDING BUSBAR (TGB). IN ADDITION, PROVIDE #1/0 AWG FROM THE TGB TO EQUIPMENT RACK AND PROVIDE #6 AWG BONDING JUMPER FROM THE EQUPMENT RACK TO EACH METALLIC ENCLOSURE, RACEWAY, ETC. REFER TO TELECOMMUNICATION GROUNDING DETAIL ON SHEET TY504.
7. PROVIDE #1/0 AWG BONDING CONDUCTOR FOR TELECOMMUNICATIONS (BCT) IN 1" CONDUIT FROM TGB TO THE GROUNDING ELECTRODE CONDUCTOR (GEC). REFER TO ELECTRICAL DRAWING FOR GEC INFORMATION.
8. PROVIDE CAT 6A UTP, 1"C FROM PACS DOOR CONTROLLER TO DEDICATED PACS PATCH PANEL IN THE SECURITY ELECTRONICS EQUIPMENT RACK.
9. SINGLE DOOR WITH MAGNETIC LOCK. PROVIDE CONDUIT/WIRING BACK TO POWER SUPPLY AND PACS DOOR CONTROLLER. REFER TO DETAIL 1 ON SHEET TY501.
10. OVERHEAD DOOR WITH MAGNETIC LOCK. PROVIDE CONDUIT/WIRING BACK TO THE POWER SUPPLY AND PACS DOOR CONTROLLER. REFER TO DETAIL 3 ON SHEET TY501.
11. EXTERIOR/CORNER MOUNTED 270-DEG PANORAMIC CAMERA. MOUNT ON WALL AS HIGH AS POSSIBLE. REFER TO DETAIL 1 ON SHEET TY502.
12. INTRUSION DETECTON SYSTEM (IDS) CONTROL PANEL. REFER TO IDS RISER DIAGRAM ON SHEET TY603 AND SPECIFICATION SECTION 281600.
13. PROVIDE CAT6A UTP, 1"C FROM INTRUISON DETECTION CONTROL PANEL TO PATCH PANEL IN THE SECURITY ELECTRONICS EQUIPMENT RACK.
14. PROVIDE CONNECTION (GENERATOR FAULT COMMON ALARM) FROM GENERATOR CONTROLLER TO IDS CONTROL PANEL.
15. PROVIDE CONNECTION (PUMP FAULT COMMON ALARM) FROM PUMP CONTROL PANEL TO IDS CONTROL PANEL.
16. IDS - KEY PAD. MOUNT AT 46" AFF TO CENTERLINE.
17. TWO (2) 4"C WITH PULL STRING FROM SECURITY CLOSET 102 (PUMP HOUSE BUILDING) TO COMMUNICATIONS HANDHOLE (SHEET TY003).
18. OVERHEAD DOOR CONTROLLER. COORDINATE LOCATION WITH OVERHEAD DOOR PROVIDER.
19. DOUBLE DOOR WITH ELECTRIFIED LOCKSET. PROVIDE CONDUIT/WIRING BACK TO POWER SUPPLY AND PACS DOOR CONTROLLER. REFER TO DETAIL 2 ON SHEET TY501.
20. 4"C WITH 6-STRAND SINGLEMODE (OS2) OPTICAL FIBER (ASSOCIATED WITH SSTV) FROM DATA ROOM 147 IN BUILDING 1 TO SECURITY CLOSET 102. INSTALL THE OPTICAL FIBER INSIDE A 1" INNERDUCT.
21. TWO (2) SPARE 4"C WITH PULL STRING FROM EQUIPMENT ROOM 008 IN BUILDING 8 TO SECURITY CLOSET 102.
22. 2"C WITH FIRE ALARM CABLING FROM BREAK ROOM 006 IN BUILDING 8 TO LOCATION SHOWN. REFER TO FIRE ALARM DRAWINGS FOR ADDITIONAL INFORMATION.
23. COORDINATE ROUTING OF CONDUIT WITH INCOMING 6" FIRE SERVICE MAIN.
24. STUB UP LOCATION FOR FIRE ALARM CONDUIT.
25. STUB UP LOCATION FOR BAS CONDUIT.
26. WEST WALL HAS A 1-HOUR FIRE BARRIER.

G:\6020-JohnsonDanforth\02-VHSO New Water Storage Facility\Working Drawings\Revit\Elec\564-19-101_Fayetteville Water Storage_TY-CENTRAL-R22.rvt

7/14/2022 8:48:53 AM

Revisions: Date:

CONSULTANTS

FP&C CONSULTANTS
FIRE PROTECTION
FP&C CONSULTANTS KC, LLC
1330 Burlington Street, Ste. 200
North Kansas City, MO 64116

GRW engineering | architecture | geospatial
SECURITY
GRW
801 CORPORATE DRIVE
LEXINGTON, KY 40503

Insight ENGINEERING
MEP ENGINEER
INSIGHT ENGINEERING, PLLC
201 S. CHESTER, SUITE B
LITTLE ROCK, AR 72201

Bernhard TME Engineering
STRUCTURAL ENGINEER
BERNHARD TME
BUILDING 2, 1 ALLIED DRIVE
SUITE 260
LITTLE ROCK, AR 72202

ARCHITECT/ENGINEER OF RECORD

A/E
JohnsonDanforth & Associates
2200 N. RODNEY PARHAM ROAD
SUITE 210
LITTLE ROCK, AR 72212
501-404-4811
jda@JohnsonDanforth.com
JDA PROJECT #: 2018.001_

STAMP
CERTIFIED CONSTRUCTION DOCUMENTS DESIGNER
BICSI
PATRICK BAUSDEN
BICSI ID# 363075
EXPIRES 12-31-22
2022-07-15
* RODD *

Office of Construction and Facilities Management

VA U.S. Department of Veterans Affairs

Drawing Title: SECURITY ELECTRONICS PUMP HOUSE FLOOR PLAN	Phase: CONSTRUCTION DOCUMENTS	Project Title: CONSTRUCT NEW WATER STORAGE FACILITY	Project Number: 564-19-101
Approved: Project Director	FULLY SPRINKLERED	Location: FAYETTEVILLE, AR	Building Number:
		Issue Date: 2022.07.15 / Checked: PJB / Drawn: PJB	Drawing Number: TY101

VA FORM 08 - 6231

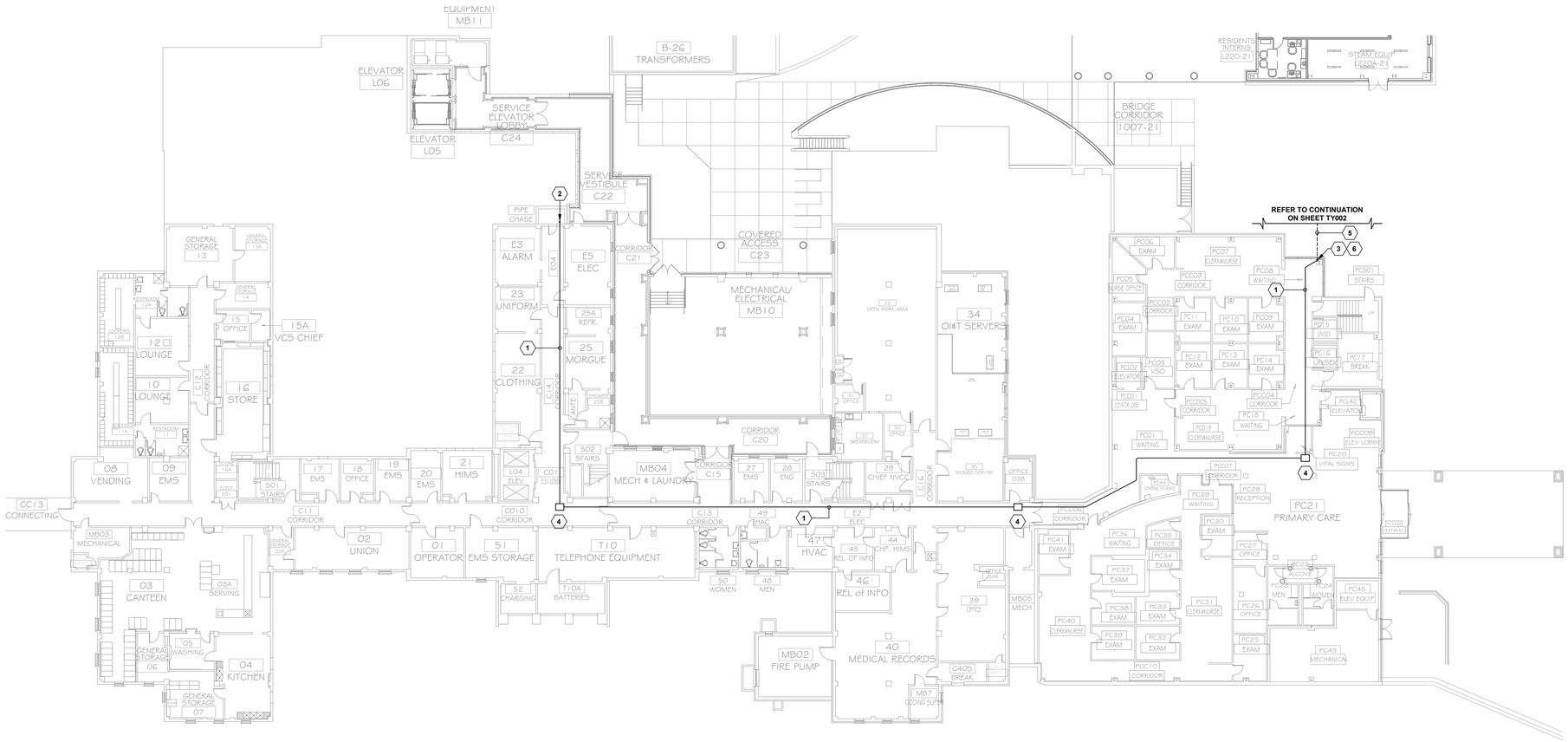

1 SECURITY ELECTRONICS BUILDING 1 GROUND FLOOR PLAN

1/16" = 1'-0"

GENERAL NOTES:

1. ALL WORK WITHIN THIS BUILDING SHALL BE PERFORMED AFTER HOURS. COORDINATE WITH THE VA.
2. CONTRACTOR SHALL PROPERLY SEAL ALL CONDUIT PENETRATIONS THROUGH FIRE RATED WALLS. REFER TO DETAIL ON SHEET TY503.
3. ALL SECURITY ELECTRONICS CABLING SHALL BE INSTALLED IN CONDUIT WITH CONDUIT ROUTED ABOVE CEILING.
4. ALL CEILING TILES REMOVED SHALL BE REINSTALLED AND ALL DEBRIS SHALL BE REMOVED PRIOR TO NORMAL WORKING HOURS. ANY DAMAGED TILES SHALL BE REPLACED WITH NEW.
5. REFER TO SHEET TY603 FOR THE SECURITY LAN FUNCTIONAL SCHEMATIC.

SHEET KEYNOTES:

1. 4"C WITH 6-STRAND SINGLEMODE (OS2) OPTICAL FIBER (ASSOCIATED WITH SSTV) FROM SPECIAL SYSTEMS DATA ROOM 147 (SHEET TY202) TO PUMP HOUSE BUILDING (SHEET TY101). INSTALL THE OPTICAL FIBER INSIDE A 1" INNERDUCT.
2. 4" SSTV CONDUIT FROM FLOOR ABOVE, ROUTE ABOVE LAY-IN CEILING. REFER TO CONTINUATION ON SHEET TY202.
3. TRANSITION FROM UNDERGROUND CONDUIT TO CONDUIT ROUTED ABOVE LAY-IN CEILING. CONTRACTOR SHALL CUT/CORE SLAB AND EXTERIOR WALL FOR ROUTING OF CONDUIT INTO BUILDING. CONTRACTOR SHALL EXTEND EXISTING COLUMN WRAP AS REQUIRED TO INSTALL CONDUIT. REPAIR COLUMN WRAP AND PAINT AS REQUIRED TO MATCH EXISTING.
4. PROVIDE PULL BOX INSTALLED ABOVE LAY-IN CEILING. SIZE PULL BOX ACCORDING TO NEC 314.28.
5. 4"C WITH 6-STRAND SINGLEMODE (OS2) OPTICAL FIBER (ASSOCIATED WITH SSTV) FROM BUILDING 1 TO EXISTING MANHOLE (SHEET TY002). INSTALL THE OPTICAL FIBER INSIDE A 1" INNERDUCT.
6. PROVIDE A WATER TIGHT SEAL FOR THE CONDUIT PENETRATION. REFER TO DETAIL 5 ON SHEET TY503.

7/12/2022 6:53:00 PM

G:\5020-JohnsonDanforth\02-VHSO New Water Storage Facility\Working Drawings\Revit\Elec\564-19-101_Fayetteville Water Storage_TY-CENTRAL-R22.rvt

Revisions: **Date:**

VA FORM 08 - 6231

CONSULTANTS

FIRE PROTECTION
FP&C CONSULTANTS KC, LLC
1330 Burlington Street, Ste. 200
North Kansas City, MO 64116

SECURITY
GRW
801 CORPORATE DRIVE
LEXINGTON, KY 40503

MEP ENGINEER
INSIGHT ENGINEERING, PLLC
201 S. CHESTER, SUITE B
LITTLE ROCK, AR 72201

STRUCTURAL ENGINEER
BERNHARD TME
BUILDING 2, 1 ALLIED DRIVE
SUITE 260
LITTLE ROCK, AR 72202

ARCHITECT/ENGINEER OF RECORD

A/E
JohnsonDanforth & Associates
2200 N. RODNEY PARHAM ROAD
SUITE 210
LITTLE ROCK, AR 72212
501-404-4811
jda@JohnsonDanforth.com
JDA PROJECT #: 2018.001

STAMP
COMMUNICATIONS SYSTEMS INSTALLATION DESIGNER
BICSI
PATRICK BAISDEN
BICSI ID# 363075
EXPIRES 12-31-23
2022-07-15
RCDD

Office of Construction and Facilities Management
VA U.S. Department of Veterans Affairs

Drawing Title: SECURITY ELECTRONICS BUILDING 1 GROUND FLOOR PLAN	Phase: CONSTRUCTION DOCUMENTS	Project Title: CONSTRUCT NEW WATER STORAGE FACILITY	Project Number: 564-19-101
			Building Number:
Approved: Project Director	FULLY SPRINKLERED	Location: FAYETTEVILLE, AR	Drawing Number: TY201
		Issue Date: 2022.07.15 / Checked: PJB / Drawn: PJB	

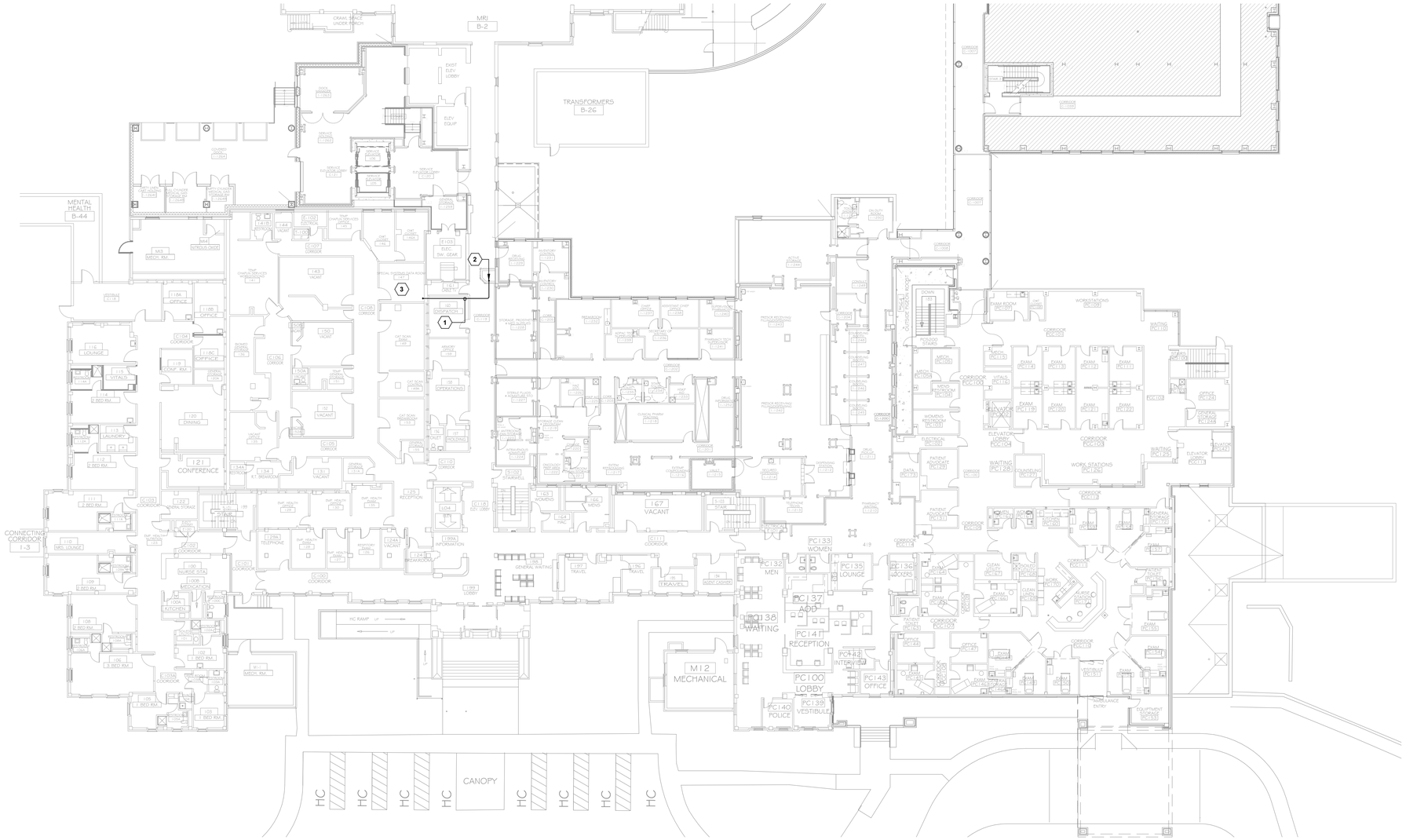

PLAN NORTH

GENERAL NOTES:

1. ALL WORK WITHIN THIS BUILDING SHALL BE PERFORMED AFTER HOURS. COORDINATE WITH THE VA.
2. CONTRACTOR SHALL PROPERLY SEAL ALL CONDUIT PENETRATIONS THROUGH FIRE RATED WALLS. REFER TO DETAIL ON SHEET TY503.
3. ALL SECURITY ELECTRONICS CABLING SHALL BE INSTALLED IN CONDUIT WITH CONDUIT ROUTED ABOVE CEILING.
4. ALL CEILING TILES REMOVED SHALL BE REINSTALLED AND ALL DEBRIS SHALL BE REMOVED PRIOR TO NORMAL WORKING HOURS. ANY DAMAGED TILES SHALL BE REPLACED WITH NEW.
5. REFER TO SHEET TY603 FOR THE SECURITY LAN FUNCTIONAL SCHEMATIC.

SHEET KEYNOTES:

1. 4"C WITH 6-STRAND SINGLEMODE (OS2) OPTICAL FIBER (ASSOCIATED WITH SSTV) FROM SPECIAL SYSTEMS DATA ROOM 147 TO PUMP HOUSE BUILDING (SHEET TY101). INSTALL THE OPTICAL FIBER INSIDE A 1" INNERDUCT.
2. 4" SSTV CONDUIT FROM FLOOR BELOW. EXTEND TO ABOVE LAY-IN CEILING AND ROUTE TO SPECIAL SYSTEMS DATA ROOM 147. REFER TO CONTINUATION ON SHEET TY201.
3. TERMINATE THE SSTV OPTICAL FIBER AT A PATCH PANEL INSTALLED IN SPACE OF THE EXISTING EQUIPMENT RACK. EXTEND PATCH CABLES AS REQUIRED TO TERMINATE FIBER TO THE EXISTING ETHERNET SWITCH. COORDINATE LOCATION OF EXISTING ETHERNET SWITCH WITHIN THE ROOM WITH THE VA.

1 SECURITY ELECTRONICS BUILDING 1 FIRST FLOOR PLAN

1/16" = 1'-0"

7/12/2022 6:53:01 PM

G:\5020-JohnsonDanforth\02-VHSO New Water Storage Facility\Working Drawings\Revit\Elec\564-19-101_Fayetteville Water Storage_TY-CENTRAL-R22.rvt

Revisions: Date:

VA FORM 08 - 6231

CONSULTANTS

FIRE PROTECTION
FP&C CONSULTANTS KC, LLC
1330 Burlington Street, Ste. 200
North Kansas City, MO 64116

SECURITY
GRW
801 CORPORATE DRIVE
LEXINGTON, KY 40503

MEP ENGINEER
INSIGHT ENGINEERING, PLLC
201 S. CHESTER, SUITE B
LITTLE ROCK, AR 72201

STRUCTURAL ENGINEER
BERNHARD TME
BUILDING 2, 1 ALLIED DRIVE
SUITE 260
LITTLE ROCK, AR 72202

ARCHITECT/ENGINEER OF RECORD

A/E
JohnsonDanforth & Associates
2200 N. RODNEY PARHAM ROAD
SUITE 210
LITTLE ROCK, AR 72212

501-404-4811
jda@JohnsonDanforth.com

JDA PROJECT #: 2018.001

STAMP

COMMUNICATIONS & INFORMATION TECHNOLOGY DESIGNER
REGISTERED
BICSI
PATRICK BAISDEN
BICSI ID# 363075
EXPIRES 12-31-23
2022-07-15
* RODD *

Office of Construction and Facilities Management

VA U.S. Department of Veterans Affairs

Drawing Title: SECURITY ELECTRONICS BUILDING 1 FIRST FLOOR PLAN	Phase: CONSTRUCTION DOCUMENTS	Project Title: CONSTRUCT NEW WATER STORAGE FACILITY	Project Number: 564-19-101
			Building Number:
Approved: Project Director	FULLY SPRINKLERED	Location: FAYETTEVILLE, AR	Drawing Number: TY202
		Issue Date: 2022.07.15 / Checked: PJB / Drawn: PJB	

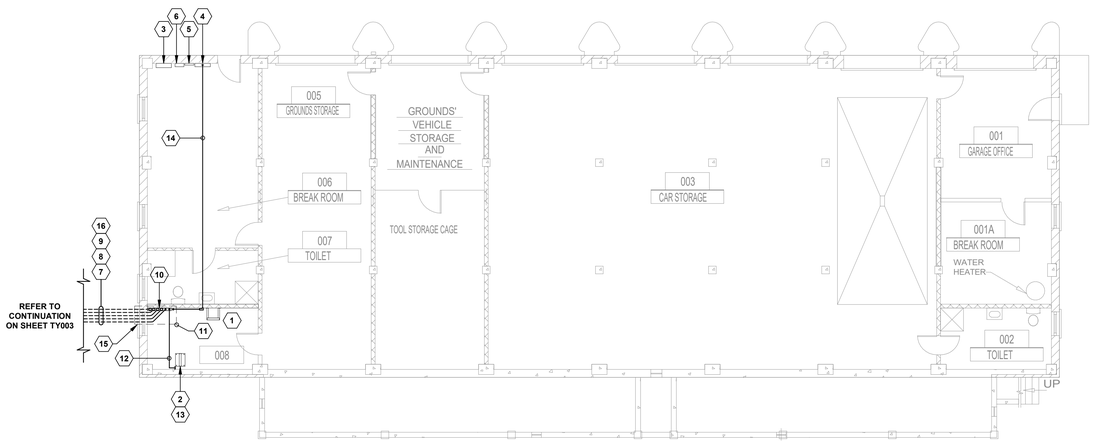

1 SECURITY ELECTRONICS BUILDING 8 FIRST FLOOR

1/8" = 1'-0"

GENERAL NOTES:

1. ALL WORK WITHIN THIS BUILDING SHALL BE PERFORMED AFTER HOURS. COORDINATE WITH THE VA.
2. CONTRACTOR SHALL PROPERLY SEAL ALL CONDUIT PENETRATIONS THROUGH FIRE RATED WALL. REFER TO DETAIL ON SHEET TY503.
3. ALL SECURITY ELECTRONICS CABLING SHALL BE INSTALLED IN CONDUIT WITH CONDUIT ROUTED ABOVE CEILING.
4. ALL CEILING TILES REMOVED SHALL BE REINSTALLED AND ALL DEBRIS SHALL BE REMOVED PRIOR TO NORMAL WORKING HOURS. ANY DAMAGED TILES SHALL BE REPLACED WITH NEW.
5. REFER TO SHEET TY603 FOR THE SECURITY LAN FUNCTIONAL SCHEMATIC.

SHEET KEYNOTES:

1. EXISTING WALL-MOUNTED SSTV EQUIPMENT CABINET.
2. EXISTING PACS EQUIPMENT RACK.
3. EXISTING PACS DOOR CONTROLLER AND POWER SUPPLY.
4. EXISTING FACP (NOTIFIER NFS-320).
5. EXISTING FACP POWER SUPPLY.
6. EXISTING FIRE ALARM OPTICAL FIBER PATCH PANEL.
7. 4"C WITH 6-STRAND SINGLEMODE (OS2) OPTICAL FIBER (ASSOCIATED WITH PACS) FROM THE PUMP HOUSE BUILDING (SHEET TY101). INSTALL THE OPTICAL FIBER INSIDE A 1" INNDERDUCT.
8. TWO (2) SPARE 4"C WITH PULL STRING FROM THE PUMP HOUSE BUILDING (SHEET TY101).
9. 2"C WITH FIRE ALARM CABLING FROM THE PUMP HOUSE BUILDING (SHEET TY101). REFER TO FIRE ALARM DRAWINGS FOR ADDITIONAL INFORMATION.
10. PROVIDE PULL BOX/WIREWAY FOR CABLE INSTALLATION - SIZE PER NEC.
11. CUT/CORE SLAB AND EXTERIOR WALL FOR ROUTING OF CONDUITS INTO BUILDING. PATCH SLAB BACK AS REQUIRED TO MATCH EXISTING.
12. EXTEND 2"C WITH 6-STRAND SINGLEMODE (OS2) OPTICAL FIBER (ASSOCIATED WITH PACS) TO THE EXISTING PACS EQUIPMENT RACK. INSTALL THE OPTICAL FIBER INSIDE A 1" INNERDUCT.
13. TERMINATE THE OPTICAL FIBER AT A PATCH PANEL INSTALLED IN SPACE OF THE EXISTING EQUIPMENT RACK. EXTEND PATCH CABLES AS REQUIRED TO TERMINATE 2-STRANDS OF FIBER TO THE EXISTING ETHERNET SWITCH.
14. EXTEND 2"C WITH FIRE ALARM CABLING FROM THE WIREWAY TO THE EXISTING FACP . ROUTE CONDUIT ABOVE LAY-IN CEILING OF BREAK ROOM 006 AND TOILET 007. REFER TO FIRE ALARM DRAWINGS FOR CABLE AND SURGE PROTECTION REQUIREMENTS.
15. PROVIDE A WATER TIGHT SEAL FOR THE CONDUIT PENETRATIONS. REFER TO DETAIL 5 ON SHEET TY503.
16. 4"C WITH BUILDING AUTOMATION SYSTEM (BAS) CABLING FROM THE PUMP HOUSE BUILDING (SHEET TY101). REFER TO ELECTRICAL DRAWINGS FOR ADDITIONAL INFORMATION.

7/12/2022 6:53:02 PM

G:\6020-JohnsonDanforth\02-VHSO New Water Storage Facility\Working Drawings\Revit\Elec\564-19-101_Fayetteville Water Storage_TY-CENTRAL-R22.rvt

Revisions: Date:

CONSULTANTS

FP&C CONSULTANTS
FIRE PROTECTION
FP&C CONSULTANTS KC, LLC
1330 Burlington Street, Ste. 200
North Kansas City, MO 64116

GRW engineering | architecture | geospatial
SECURITY
GRW
801 CORPORATE DRIVE
LEXINGTON, KY 40503

Insight ENGINEERING
MEP ENGINEER
INSIGHT ENGINEERING, PLLC
201 S. CHESTER, SUITE B
LITTLE ROCK, AR 72201

Bernhard TME Engineering
STRUCTURAL ENGINEER
BERNHARD TME
BUILDING 2, 1 ALLIED DRIVE
SUITE 260
LITTLE ROCK, AR 72202

ARCHITECT/ENGINEER OF RECORD

A/E
JohnsonDanforth & Associates
2200 N. RODNEY PARHAM ROAD
SUITE 210
LITTLE ROCK, AR 72212
501-404-4811
jda@JohnsonDanforth.com
JDA PROJECT #: 2018.001

STAMP
Communications Technology Bicsi
Patrick Baisden
BICSI ID# 363075
Expires 12-31-22
2022-07-15
RCDD

Office of Construction and Facilities Management
VA U.S. Department of Veterans Affairs

Drawing Title: **SECURITY ELECTRONICS BUILDING 8 GROUND FLOOR PLAN**
Approved: Project Director

Phase: **CONSTRUCTION DOCUMENTS**
FULLY SPRINKLERED

Project Title: **CONSTRUCT NEW WATER STORAGE FACILITY**
Location: **FAYETTEVILLE, AR**
Issue Date: 2022.07.15
Checked: PJB
Drawn: PJB

Project Number: **564-19-101**
Building Number:
Drawing Number: **TY301**

VA FORM 08 - 6231

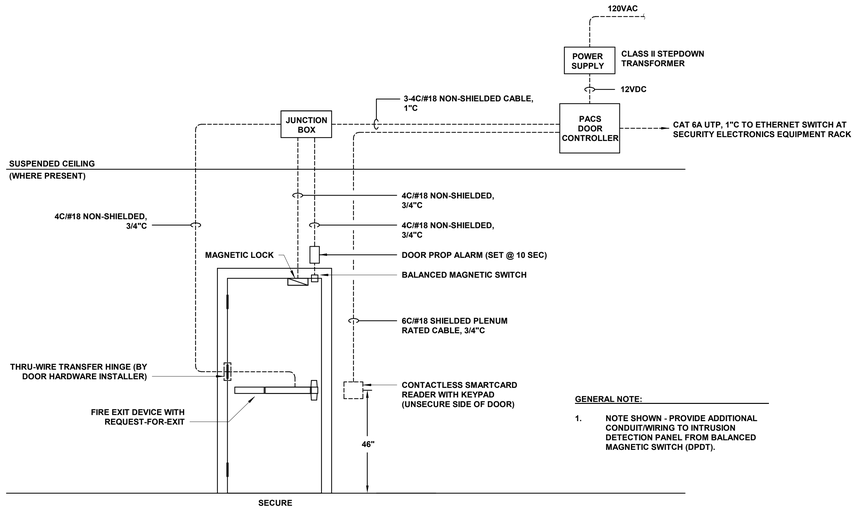

1 TYPICAL SINGLE DOOR WITH MAGNETIC LOCK DETAIL
NOT TO SCALE

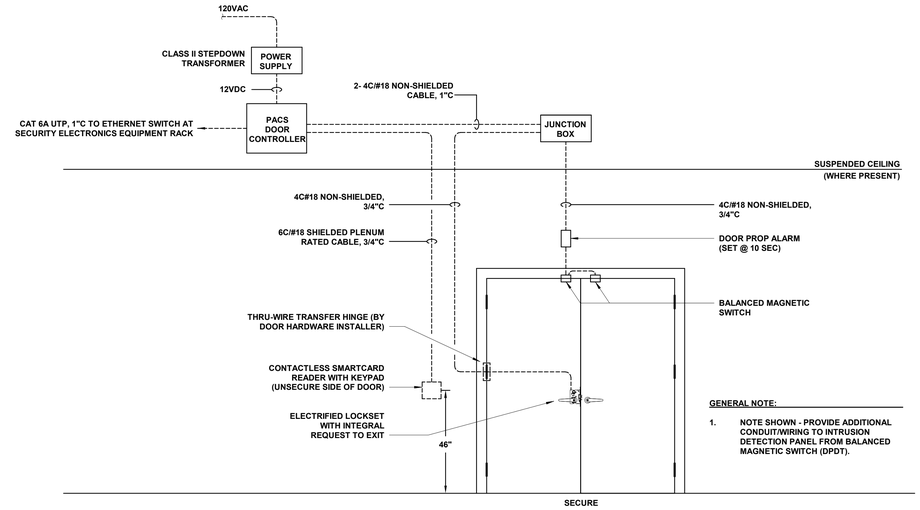

2 TYPICAL DOUBLE DOOR WITH ELECTRIFIED LOCKSET
NOT TO SCALE

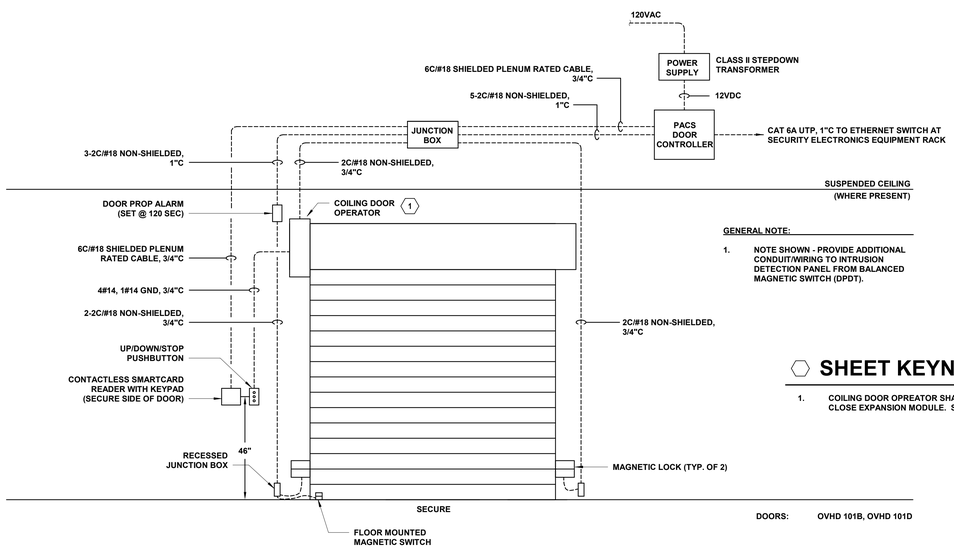

SHEET KEYNOTES:

1. COILING DOOR OPREATOR SHALL BE PROVIDED WITH A TIMER CLOSE EXPANSION MODULE. SET TIME DELAY @ 120-SECONDS.

3 TYPICAL OVERHEAD DOOR WITH MAGNETIC LOCK DETAIL
NOT TO SCALE

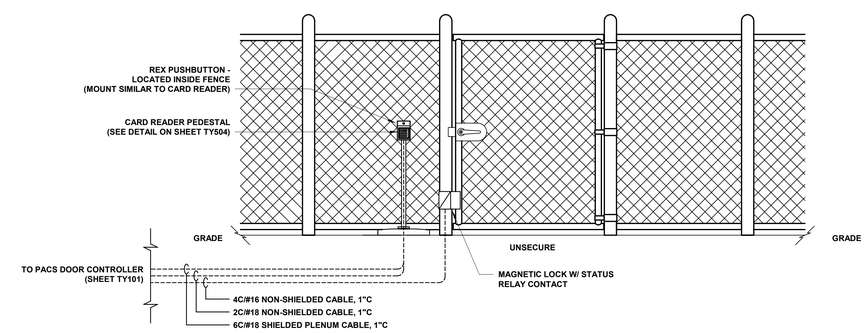

4 TYPICAL PEDESTRIAN GATE WITH MAGNETIC LOCK
NOT TO SCALE

G:\5020-JohnsonDanforth\02-VHSO New Water Storage Facility\Working Drawings\Revit\Elec\564-19-101_Fayetteville Water Storage_TY-CENTRAL-R22.rvt

7/12/2022 6:53:02 PM

Revisions: Date:

CONSULTANTS

FP&C CONSULTANTS
FIRE PROTECTION
FP&C CONSULTANTS KC, LLC
1330 Burlington Street, Ste. 200
North Kansas City, MO 64116

GRW engineering | architecture | geospatial
SECURITY
GRW
801 CORPORATE DRIVE
LEXINGTON, KY 40503

Insight ENGINEERING
MEP ENGINEER
INSIGHT ENGINEERING, PLLC
201 S. CHESTER, SUITE B
LITTLE ROCK, AR 72201

Bernhard TME Engineering
STRUCTURAL ENGINEER
BERNHARD TME
BUILDING 2, 1 ALLIED DRIVE
SUITE 260
LITTLE ROCK, AR 72202

ARCHITECT/ENGINEER OF RECORD

A/E
JohnsonDanforth & Associates
2200 N. RODNEY PARHAM ROAD
SUITE 210
LITTLE ROCK, AR 72212
501-404-4811
jda@JohnsonDanforth.com
JDA PROJECT #: 2018.001

STAMP
BICSI
PATRICK BAISDEN
BICSI ID# 363075
EXPIRES 12-31-23
2022-07-15
* RCDD *

Office of Construction and Facilities Management
VA U.S. Department of Veterans Affairs

Drawing Title: SECURITY ELECTRONICS PACS DETAILS	Phase: CONSTRUCTION DOCUMENTS	Project Title: CONSTRUCT NEW WATER STORAGE FACILITY	Project Number: 564-19-101
			Building Number:
Approved: Project Director	FULLY SPRINKLERED	Location: FAYETTEVILLE, AR	Drawing Number: TY501
		Issue Date: 2022.07.15 / Checked: PJB / Drawn: PJB	

VA FORM 08 - 6231

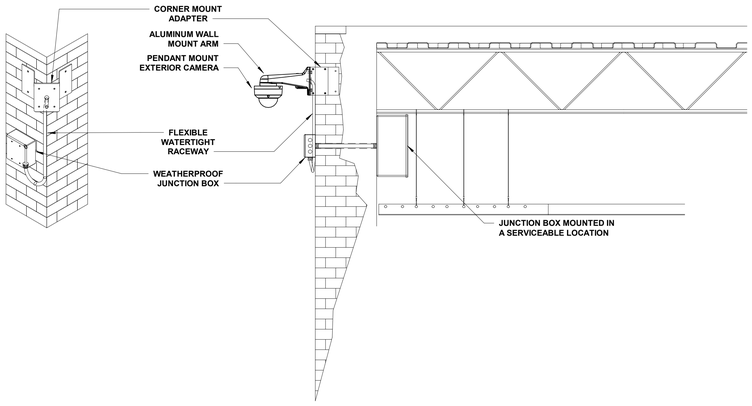

1 CORNER MOUNT CAMERA
NOT TO SCALE

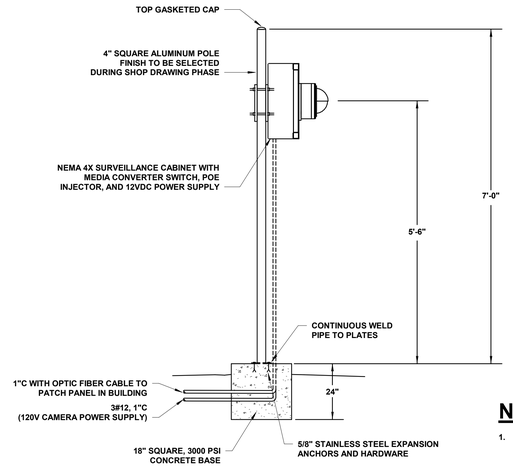

NOTES:

1. CONCRETE BASE SHALL EXTEND 6" ABOVE FINISHED GRADE.

2 SECURITY GATE ENTRANCE CAMERA MOUNTING DETAIL
NOT TO SCALE

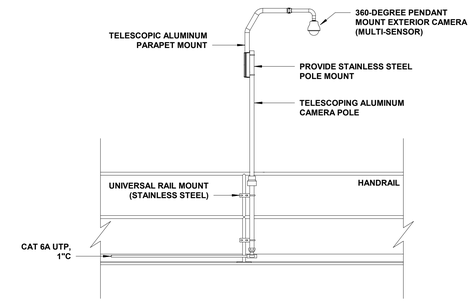

3 CAMERA POLE DETAIL
NOT TO SCALE

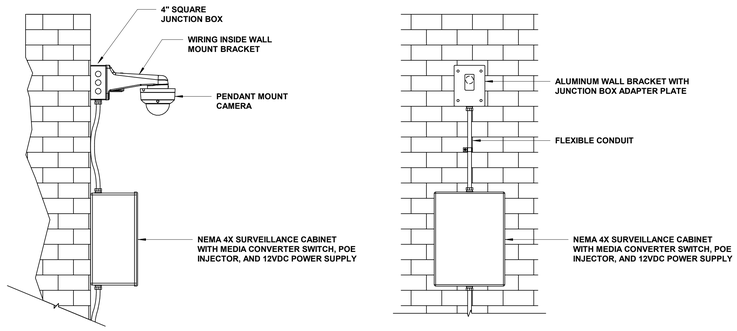

4 WALL MOUNT CAMERA
NOT TO SCALE

7/14/2022 8:58:15 AM

G:\5020-JohnsonDanforth\02-VHSO New Water Storage Facility\Working Drawings\Revit\Elec\564-19-101_Fayetteville Water Storage_TY-CENTRAL-R22.rvt

Revisions: Date:

CONSULTANTS

FIRE PROTECTION
FP&C CONSULTANTS KC, LLC
1330 Burlington Street, Ste. 200
North Kansas City, MO 64116

SECURITY
GRW
801 CORPORATE DRIVE
LEXINGTON, KY 40503

MEP ENGINEER
INSIGHT ENGINEERING, PLLC
201 S. CHESTER, SUITE B
LITTLE ROCK, AR 72201

STRUCTURAL ENGINEER
BERNHARD TME
BUILDING 2, 1 ALLIED DRIVE
SUITE 260
LITTLE ROCK, AR 72202

ARCHITECT/ENGINEER OF RECORD
A/E
JohnsonDanforth & Associates
2200 N. RODNEY PARHAM ROAD
SUITE 210
LITTLE ROCK, AR 72212
501-404-4811
jda@JohnsonDanforth.com
JDA PROJECT #: 2018.001

STAMP
REGISTERED COMMUNICATIONS DISTRIBUTION DESIGNER
BICSI
PATRICK BAISDEN
BICSI ID# 363075
EXPIRES 12-31-22
2022-07-15
* RCDD *

Office of Construction and Facilities Management
VA U.S. Department of Veterans Affairs

Drawing Title: SECURITY ELECTRONICS SSTV DETAILS
Phase: CONSTRUCTION DOCUMENTS
Project Title: CONSTRUCT NEW WATER STORAGE FACILITY
Project Number: 564-19-101
Building Number:
Approved: Project Director
FULLY SPRINKLERED
Location: FAYETTEVILLE, AR
Issue Date: 2022.07.15
Checked: PJB
Drawn: PJB
Drawing Number: TY502

VA FORM 08 - 6231

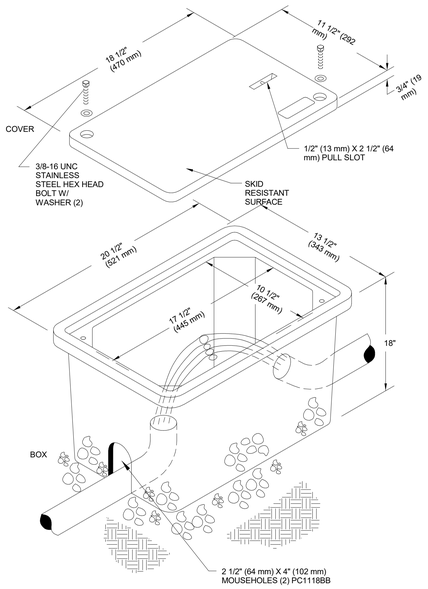

GENERAL NOTES:

1. DIMENSIONS ARE FOR REFERENCE ONLY. PULL BOXES SHALL BE SIZED PER NEC.

1 COMMUNICATION PULLBOX DETAIL
NOT TO SCALE

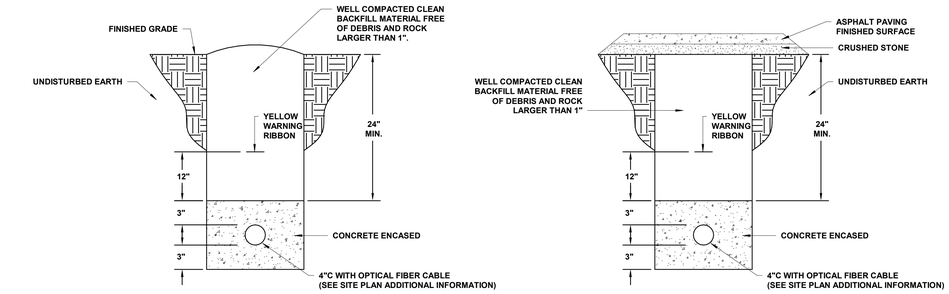

2 SINGLE CONDUIT DUCT BANK SECTION
NOT TO SCALE

GENERAL NOTES:

1. CONCRETE SHALL BE 3000 PSI @ 28 DAYS OR AS SPECIFIED.
2. CONDUITS SHALL BE PVC SCHEDULE 80.
3. PROVIDE #4 REINFORCING RODS ON TOP AND BOTTOM OF DUCTS WHEN CROSSING OR PLACED IN ROADWAYS.
4. PROVIDE ONE (1) SPACER PER 10 FEET IN LENGTH OF DUCT, MINIMUM. COORDINATE WITH MANUFACTURER'S RECOMMENDATIONS.
5. CONDUIT SPACERS SHALL BE INSTALLED TO PROVIDE 3 INCHES OF CLEARANCE BETWEEN ALL DUCTS. PROVIDE ALL TIE WIRE, HOLD DOWNS, TIE WRAPS AND OTHER MISCELLANEOUS MATERIALS FOR DUCT BANK CONSTRUCTION PER MANUFACTURER'S RECOMMENDATIONS.
6. LAST ELBOW OF CONDUIT RUNS BEFORE BEING EXPOSED IN BUILDINGS SHALL BE GALVANIZED RIGID STEEL. PROVIDE AN ASPHALTUM COATING ON STEEL CONDUIT AND FITTINGS BELOW GRADE.
7. ALL EMPTY CONDUITS SHALL INCLUDE PULL ROPE.

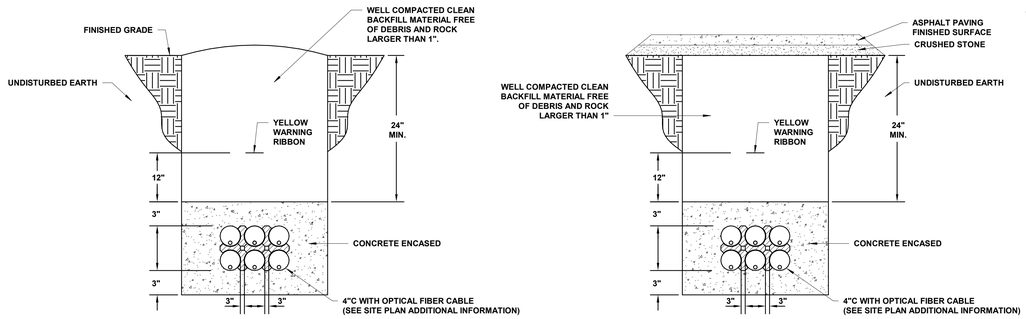

3 MULTIPLE CONDUIT DUCT BANK SECTION
NOT TO SCALE

SYSTEM NO. C-AJ-1009
F RATING - 1 HR
T RATING - 0 HR

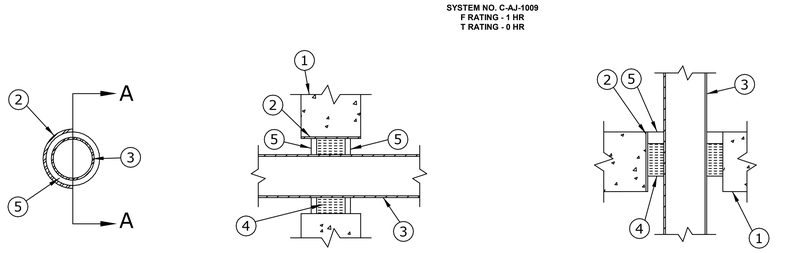

SECTION A-A (WALL ASSEMBLY)

SECTION A-A (FLOOR ASSEMBLY)

SYSTEM NOTES:

1. FLOOR OR WALL ASSEMBLY — MINIMUM 5 INCH (127 MM) THICK REINFORCED NORMAL WEIGHT (100-150 PCF OR 1600-2400 KG/M3) CONCRETE. WALL MAY ALSO BE CONSTRUCTED OF ANY UL CLASSIFIED CONCRETE BLOCKS*. MAXIMUM DIAMETER OF OPENING IS 6 INCHES (152 MM).

   SEE CONCRETE BLOCKS (CAZT) CATEGORY IN THE FIRE RESISTANCE DIRECTORY FOR NAMES OF MANUFACTURERS.
2. METALLIC SLEEVE — (OPTIONAL) - NOMINAL 6 INCHES (152 MM) DIAMETER (OR SMALLER) ELECTRICAL METALLIC TUBING, STEEL CONDUIT, OR CAST IRON PIPE CAST OR GROUTED INTO FLOOR OR WALL ASSEMBLY, FLUSH WITH FLOOR OR WALL SURFACES.
3. THROUGH PENETRANTS — ONE METALLIC PIPE OR CONDUIT TO BE CENTERED WITHIN THE FIRESTOP SYSTEM. A NOMIMAL ANNULAR SPACE OF 3/4 INCH (19 MM) IS REQUIRED WITHIN THE FIRESTOP SYSTEM. PIPE OR CONDUIT TO BE RIGIDLY SUPPORTED ON BOTH SIDES OF FLOOR OR WALL ASSEMBLY. THE FOLLOWING TYPES AND SIZES OF METALLIC PIPES OR CONDUITS MAY BE USED:
   - A. STEEL PIPE — NOMINAL 4 INCH (102 MM) DIAMETER (OR SMALLER) SCHEDULE 5 (OR HEAVIER) STEEL PIPE.
   - B. CONDUIT — NOMINAL 4 INCH (102 MM) DIAMETER (OR SMALLER) STEEL ELECTRICAL METALLIC TUBING OR STEEL CONDUIT.
4. PACKING MATERIAL — MININUM 3 INCH (76 MM) THICKNESS OF MINIMUM 4 PCF (64 KG/M3) MINERAL WOOL BATT INSULATION FIRMLY PACKED INTO OPENING AS A PERMANENT FORM. PACKING MATERIAL TO BE RECESSED FROM TOP SURFACE OF FLOOR AS REQUIRED TO ACCOMMODATE THE REQUIRED THICKNESS OF FILL MATERIAL. PACKING MATERIAL TO BE CENTERED IN WALLS MID DEPTH AND RECESSED TO ALLOW FOR INSTALLATION OF FILL MATERIAL.
5. FILL, VOID OR CAVITY MATERIAL* — SEALANT — MINIMUM 1/2 INCH (13 MM) THICKNESS OF FILL MATERIAL APPLIED WITHIN THE ANNULUS, FLUSH WITH TOP SURFACE OF FLOOR. IN WALLS, FILL MATERIAL TO BE APPLIED ON EACH SIDE OF PACKING MATERIAL.

   3M COMPANY — TYPES FB-1000 NS, FB-1003SL (FLOORS ONLY), FB-2000 OR FB-2000+ (FLOORS ONLY).
   *BEARING THE UL CLASSIFICATION MARK

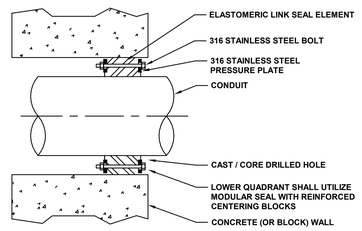

5 CONDUIT PENETRATION DETAIL
NOT TO SCALE

4 CONDUIT PENETRATIONS THROUGH FIRE FLOOR / WALL - 1HR (CONCRETE)
NOT TO SCALE

7/12/2022 6:53:03 PM

G:\5020-JohnsonDanforth\02-VHSO New Water Storage Facility\Working Drawings\Revit\Elec\564-19-101_Fayetteville Water Storage_TY-CENTRAL-R22.rvt

Revisions: Date:

CONSULTANTS

FIRE PROTECTION
FP&C CONSULTANTS KC, LLC
1330 Burlington Street, Ste. 200
North Kansas City, MO 64116

SECURITY
GRW
801 CORPORATE DRIVE
LEXINGTON, KY 40503

MEP ENGINEER
INSIGHT ENGINEERING, PLLC
201 S. CHESTER, SUITE B
LITTLE ROCK, AR 72201

STRUCTURAL ENGINEER
BERNHARD TME
BUILDING 2, 1 ALLIED DRIVE
SUITE 260
LITTLE ROCK, AR 72202

ARCHITECT/ENGINEER OF RECORD
A/E
JohnsonDanforth & Associates
2200 N. RODNEY PARHAM ROAD
SUITE 210
LITTLE ROCK, AR 72212
501-404-4811
jda@JohnsonDanforth.com
JDA PROJECT #: 2018.001

STAMP
BICSI
PATRICK BAISDEN
BICSI ID# 363075
EXPIRES 12-31-23
2021-07-15

Office of Construction and Facilities Management
VA U.S. Department of Veterans Affairs

VA FORM 08 - 6231

Drawing Title: SECURITY ELECTRONICS MISCELLANEOUS DETAILS I	Phase: CONSTRUCTION DOCUMENTS	Project Title: CONSTRUCT NEW WATER STORAGE FACILITY			Project Number: 564-19-101
					Building Number:
Approved: Project Director	FULLY SPRINKLERED	Location: FAYETTEVILLE, AR			Drawing Number: TY503
		Issue Date: 2022.07.15	Checked: PJB	Drawn: PJB	

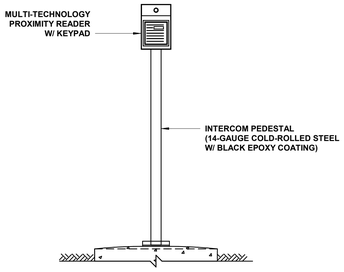

1 PEDESTAL ASSEMBLY
NOT TO SCALE

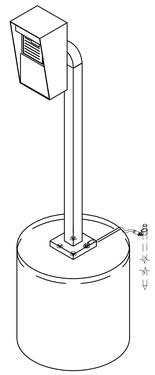

2 PEDESTAL - ISOMETRIC
NOT TO SCALE

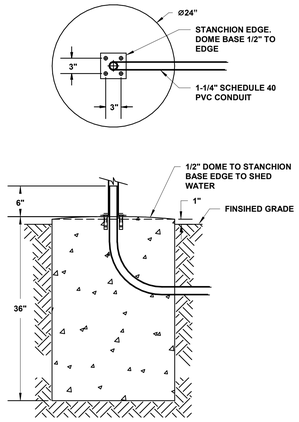

3 PEDESTAL BASE
NOT TO SCALE

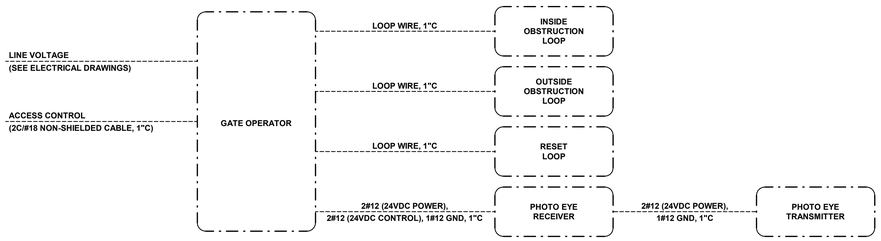

GENERAL NOTES:

1. GATE AND GATE OPERATOR FURNSIHED AND INSTALLED BY DIVISION 32.
2. CONTRACTOR TO VERIFY WIRING REQUIREMENTS WITH ARCHITECT/ENGINEER APPROVED SHOP DRAWINGS.

4 GATE CONTROLLER DIAGRAM
NOT TO SCALE

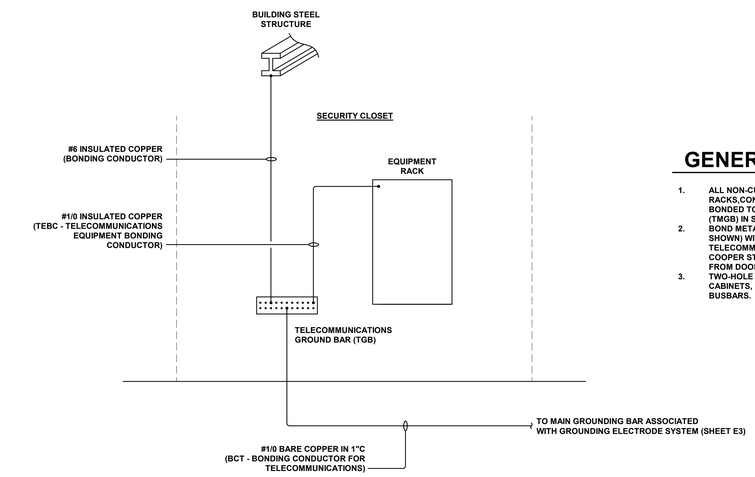

GENERAL NOTES:

1. ALL NON-CURRENT CARRYING METAL OBJECTS (EQUIPMENT RACKS,CONDUIT, LIGHTS, HVAC EQUIPMENT, ETC.) SHALL BE BONDED TO THE TELECOMMUNICATIONS MAIN GROUND BAR (TMGB) IN SECURITY CLOSET.
2. BOND METAL DOOR FRAMES,LIGHTS, HVAC EQUIPMENT (NOT SHOWN) WITH #6 INSULATED COPPER CONDUCTOR TO TELECOMMUNICATIONS GROUND BAR (TGB). PROVIDE FLEXIBLE COOPER STRAP OR #6 INSULATED GROUND CONDUCTOR JUMPER FROM DOOR FRAME TO METAL DOORS.
3. TWO-HOLE LUGS SHALL BE USED TO BOND TO BUSBARS, RACKS, CABINETS, ETC. COMPRESSION STYLE SHALL BE USED FOR ALL BUSBARS.

5 TELECOMMUNICATION GROUNDING DETAIL
NOT TO SCALE

7/12/2022 6:53:04 PM

G:\5020-JohnsonDanforth\02-VHSO New Water Storage Facility\Working Drawings\Revit\Elec\564-19-101_Fayetteville Water Storage_TY-CENTRAL-R22.rvt

Revisions: Date:

CONSULTANTS

FP&C CONSULTANTS
FIRE PROTECTION
FP&C CONSULTANTS KC, LLC
1330 Burlington Street, Ste. 200
North Kansas City, MO 64116

GRW engineering | architecture | geospatial
SECURITY
GRW
801 CORPORATE DRIVE
LEXINGTON, KY 40503

Insight ENGINEERING
MEP ENGINEER
INSIGHT ENGINEERING, PLLC
201 S. CHESTER, SUITE B
LITTLE ROCK, AR 72201

Bernhard TME Engineering
STRUCTURAL ENGINEER
BERNHARD TME
BUILDING 2, 1 ALLIED DRIVE
SUITE 260
LITTLE ROCK, AR 72202

ARCHITECT/ENGINEER OF RECORD

A/E
JohnsonDanforth & Associates
2200 N. RODNEY PARHAM ROAD
SUITE 210
LITTLE ROCK, AR 72212
501-404-4811
jda@JohnsonDanforth.com
JDA PROJECT #: 2018.001

STAMP
REGISTERED COMMUNICATIONS DISTRIBUTION DESIGNER
BICSI
PATRICK BAISDEN
BICSI ID# 363075
EXPIRES 12-31-23
2022-07-15
* RCDD *

Office of Construction and Facilities Management
VA U.S. Department of Veterans Affairs

Drawing Title: SECURITY ELECTRONICS MISCELLANEOUS DETAILS II	Phase: CONSTRUCTION DOCUMENTS	Project Title: CONSTRUCT NEW WATER STORAGE FACILITY	Project Number: 564-19-101
			Building Number:
Approved: Project Director	FULLY SPRINKLERED	Location: FAYETTEVILLE, AR	Drawing Number: TY504
		Issue Date: 2022.07.15 / Checked: PJB / Drawn: PJB	

VA FORM 08 - 6231

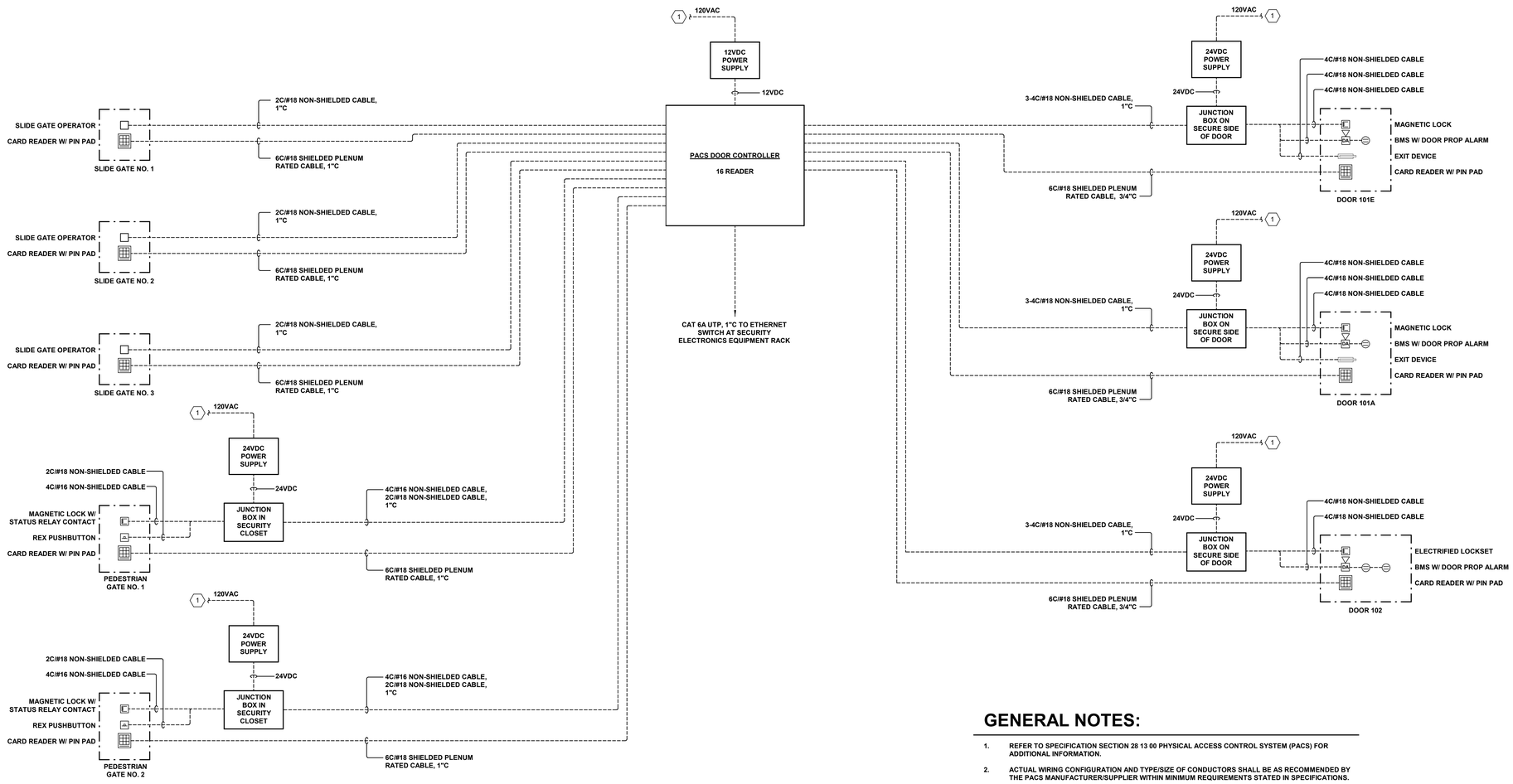

GENERAL NOTES:

1. REFER TO SPECIFICATION SECTION 28 13 00 PHYSICAL ACCESS CONTROL SYSTEM (PACS) FOR ADDITIONAL INFORMATION.
2. ACTUAL WIRING CONFIGURATION AND TYPE/SIZE OF CONDUCTORS SHALL BE AS RECOMMENDED BY THE PACS MANUFACTURER/SUPPLIER WITHIN MINIMUM REQUIREMENTS STATED IN SPECIFICATIONS.
3. PACS COMPONENTS SHOWN CONSTITUTE THE TYPE, PRODUCT QUALITY, MATERIAL AND DESIRED OPERATING FEATURES REQUIRED. THE ACCESS CONTROL SYSTEM MANUFACTURER/SUPPLIER IS RESPONSIBLE FOR PROVIDING A COMPLETE AND OPERATIONAL SYSTEM.
4. REFER TO ARCHITECTURAL DRAWINGS AND SPECIFICATIONS FOR ADDITIONAL INFORMATION RELATING TO ELECTRIFIED DOOR HARDWARE. EXIT DEVICES, ELECTRIC LOCKS, LATCHBOLT/DOOR STATUS SWITCHES, POWER SUPPLIES, ETC. ARE FURNISHED AND INSTALLED BY THE DOOR HARDWARE CONTRACTOR. WIRING FROM ELECTRIFIED DOOR HARDWARE WILL BE INSTALLED COMPLETE TO JUNCTION BOX LOCATED ABOVE CEILING. ALL OTHER REQUIRED CONNECTIONS BY PACS CONTRACTOR.
5. CATEGORY 6A, UNSHIELDED TWISTED PAIR (UTP) WITH OVERALL PURPLE JACKET. TERMINATE ALL ENDS WITH A RJ45 MODULAR PLUG USING THE TIA/EIA 568B COLOR CODING STANDARD.

SHEET KEYNOTES:

1. REFER TO ELECTRICAL DRAWINGS FOR CIRCUIT INFORMATION.

1 PACS RISER DIAGRAM

NOT TO SCALE

G:\5020-JohnsonDanforth\02-VHSO New Water Storage Facility\Working Drawings\Revit\Elec\564-19-101_Fayetteville Water Storage_TY-CENTRAL-R22.rvt

7/12/2022 6:53:05 PM

Revisions: Date:

VA FORM 08 - 6231

CONSULTANTS

FP&C CONSULTANTS
FIRE PROTECTION
FP&C CONSULTANTS KC, LLC
1330 Burlington Street, Ste. 200
North Kansas City, MO 64116

GRW engineering | architecture | geospatial
SECURITY
GRW
801 CORPORATE DRIVE
LEXINGTON, KY 40503

Insight ENGINEERING
MEP ENGINEER
INSIGHT ENGINEERING, PLLC
201 S. CHESTER, SUITE B
LITTLE ROCK, AR 72201

Bernhard TME Engineering
STRUCTURAL ENGINEER
BERNHARD TME
BUILDING 2, 1 ALLIED DRIVE
SUITE 260
LITTLE ROCK, AR 72202

ARCHITECT/ENGINEER OF RECORD

A/E
JohnsonDanforth & Associates
2200 N. RODNEY PARHAM ROAD
SUITE 210
LITTLE ROCK, AR 72212
501-404-4811
jda@JohnsonDanforth.com
JDA PROJECT #: 2018.001

STAMP
PATRICK BAISDEN
BICSI ID# 363075
EXPIRES 12-31-23
2022-07-15
* RCDD *

Office of Construction and Facilities Management

VA U.S. Department of Veterans Affairs

Drawing Title: SECURITY ELECTRONICS PACS RISER DIAGRAM	Phase: CONSTRUCTION DOCUMENTS	Project Title: CONSTRUCT NEW WATER STORAGE FACILITY	Project Number: 564-19-101
			Building Number:
Approved: Project Director	FULLY SPRINKLERED	Location: FAYETTEVILLE, AR	Drawing Number: TY601
		Issue Date: 2022.07.15 / Checked: PJB / Drawn: PJB	

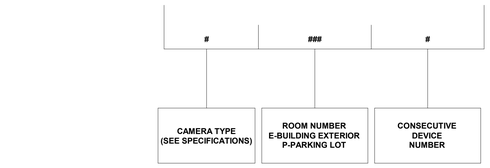

SECURITY SURVEILLANCE TELEVISION ADDRESS DESIGNATIONS

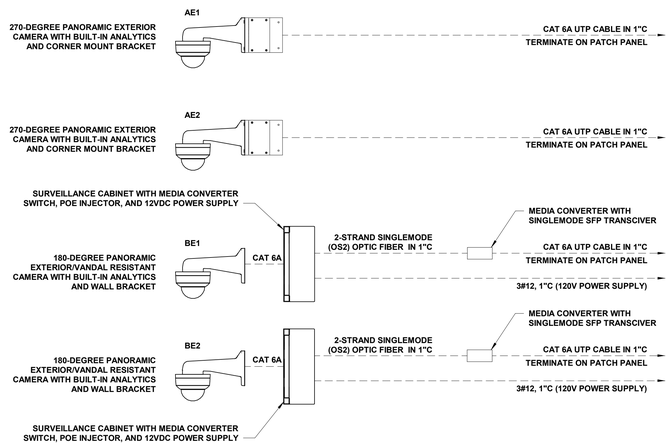

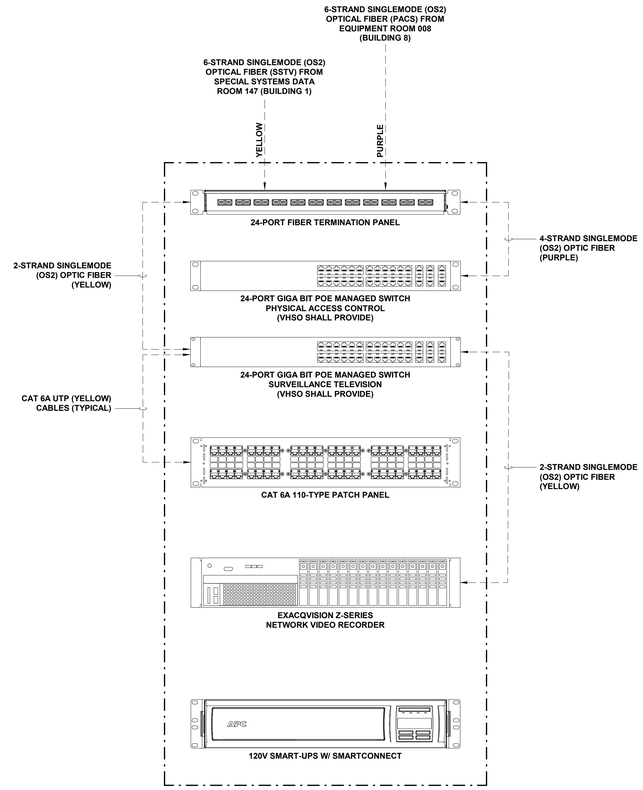

GENERAL NOTES:

1. REFER TO SPECIFICATION SECTION 28 23 00 VIDEO SURVEILLANCE SYSTEM (VASS)/SECURITY SURVEILLANCE TELEVISION (SSTV) FOR ADDITIONAL INFORMATION.
2. ACTUAL WIRING CONFIGURATION AND TYPE/SIZE OF CONDUCTORS SHALL BE AS RECOMMENDED BY THE VASS/SSTV MANUFACTURER/SUPPLIER WITHIN MINIMUM REQUIREMENTS STATED IN SPECIFICATIONS
3. VASS/SSTV COMPONENTS SHOWN CONSTITUTE THE TYPE, PRODUCT QUALITY, MATERIAL AND DESIRED OPERATING FEATURES REQUIRED. THE VASS/SSTV MANUFACTURER/SUPPLIER IS RESPONSIBLE FOR PROVIDING A COMPLETE AND OPERATIONAL SYSTEM.
4. PROVIDE SURGE SUPPRESSION FOR ALL EXTERIOR CIRCUITS.
5. CATEGORY 6A, UNSHIELDED TWISTED PAIR (UTP) WITH OVERALL YELLOW JACKET. TERMINATE ALL ENDS WITH A RJ45 MODULAR PLUG USING THE TIA/EIA 568B COLOR CODING STANDARD.

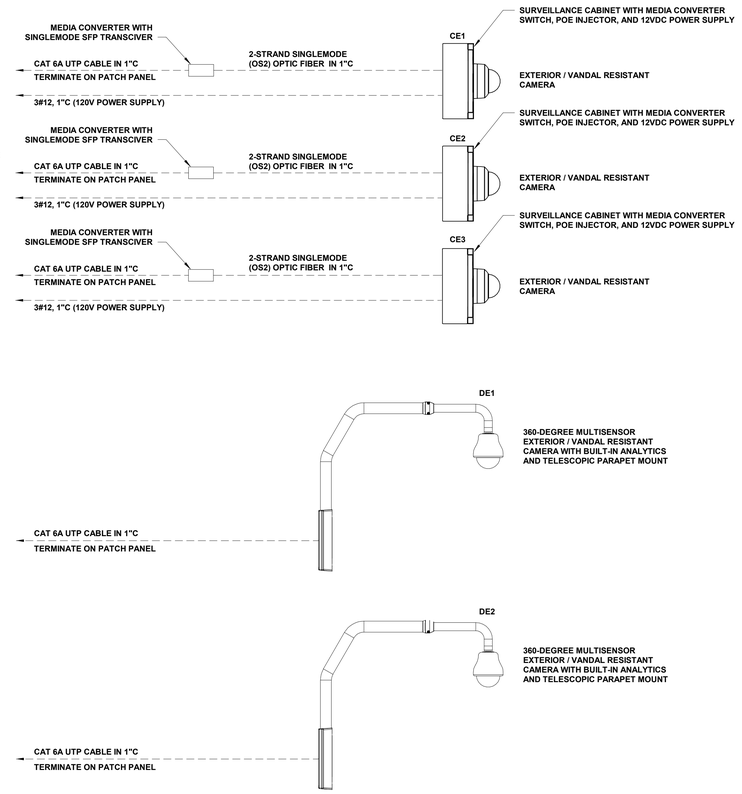

1 SSTV RISER DIAGRAM

NOT TO SCALE

G:\5020-JohnsonDanforth\02-VHSO New Water Storage Facility\Working Drawings\Revit\Elec\564-19-101_Fayetteville Water Storage_TY-CENTRAL-R22.rvt

7/14/2022 8:51:50 AM

Revisions: Date:

CONSULTANTS

FIRE PROTECTION
FP&C CONSULTANTS KC, LLC
1330 Burlington Street, Ste. 200
North Kansas City, MO 64116

SECURITY
GRW
801 CORPORATE DRIVE
LEXINGTON, KY 40503

MEP ENGINEER
INSIGHT ENGINEERING, PLLC
201 S. CHESTER, SUITE B
LITTLE ROCK, AR 72201

STRUCTURAL ENGINEER
BERNHARD TME
BUILDING 2, 1 ALLIED DRIVE
SUITE 260
LITTLE ROCK, AR 72202

ARCHITECT/ENGINEER OF RECORD

A/E
JohnsonDanforth & Associates
2200 N. RODNEY PARHAM ROAD
SUITE 210
LITTLE ROCK, AR 72212
501-404-4811
jda@JohnsonDanforth.com
JDA PROJECT #: 2018.001

STAMP
PATRICK BAISDEN
BICSI ID# 363075
EXPIRES 12-31-22
2022-07-15

Office of Construction and Facilities Management

VA U.S. Department of Veterans Affairs

Drawing Title: SECURITY ELECTRONICS SSTV RISER DIAGRAM	Phase: CONSTRUCTION DOCUMENTS	Project Title: CONSTRUCT NEW WATER STORAGE FACILITY	Project Number: 564-19-101
Approved: Project Director	FULLY SPRINKLERED	Location: FAYETTEVILLE, AR	Building Number
		Issue Date: 2022.07.15 / Checked: PJB / Drawn: PJB	Drawing Number: TY602

VA FORM 08 - 6231

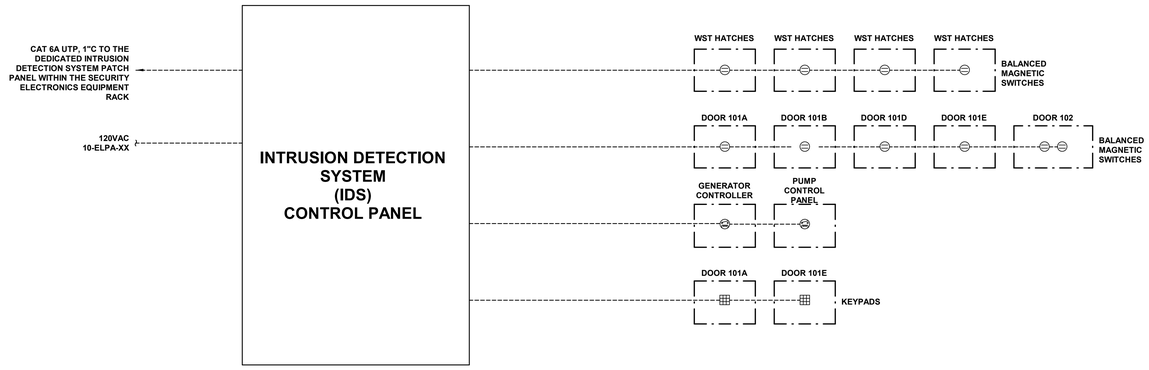

GENERAL NOTES:

1. REFER TO SPECIFICATION SECTION 28 16 00 INTRUSION DETECTION SYSTEM (IDS) FOR ADDITIONAL INFORMATION.
2. ACTUAL WIRING CONFIGURATION AND TYPE/SIZE OF CONDUCTORS SHALL BE AS RECOMMENDED BY THE IDS MANUFACTURER/SUPPLIER WITHIN MINIMUM REQUIREMENTS STATED IN SPECIFICATIONS
3. IDS COMPONENTS SHOWN CONSTITUTE THE TYPE, PRODUCT QUALITY, MATERIAL AND DESIRED OPERATING FEATURES REQUIRED. THE IDS MANUFACTURER/SUPPLIER IS RESPONSIBLE FOR PROVIDING A COMPLETE AND OPERATIONAL SYSTEM.
4. CATEGORY 6A, UNSHIELDED TWISTED PAIR (UTP) WITH OVERALL WHITE JACKET. TERMINATE ALL ENDS WITH A RJ45 MODULAR PLUG USING THE TIA/EIA 568B COLOR CODING STANDARD.

1 IDS RISER DIAGRAM
NOT TO SCALE

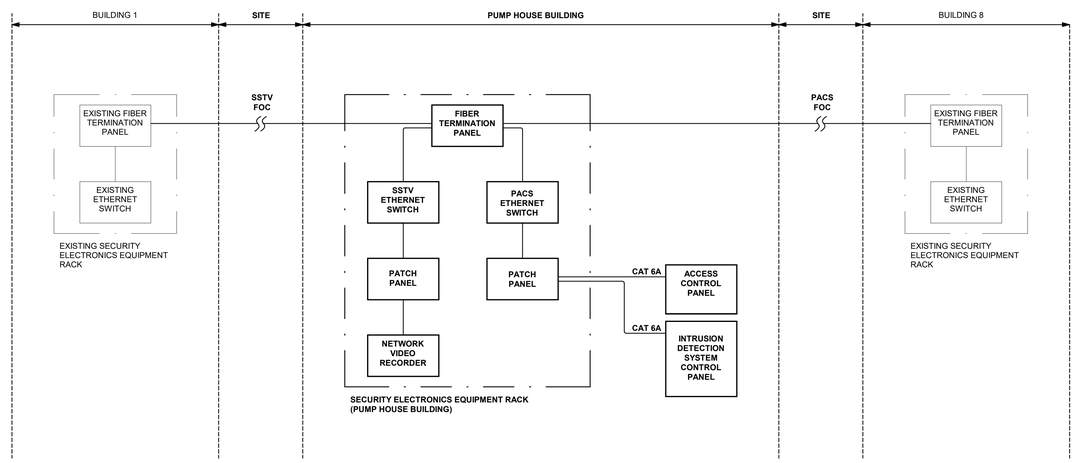

GENERAL NOTES:

1. REFER TO RISER DIAGRAMS ON SHEET TY601 THROUGH TY603 FOR ADDITIONAL REQUIREMENTS.
2. SSTV OPTICAL FIBER SHALL BE 6-STRAND SINGLEMODE (OS2) WITH YELLOW JACKET.
3. PACS OPTICAL FIBER SHALL BE 6-STRAND SINGLEMODE (OS2) WITH PURPLE JACKET.

2 SECURITY LAN FUNCTIONAL SCHEMATIC
NOT TO SCALE

G:\6020-JohnsonDanforth\02-VHSO New Water Storage Facility\Working Drawings\Revit\Elec\564-19-101_Fayetteville Water Storage_TY-CENTRAL-R22.rvt

7/12/2022 6:53:06 PM

Revisions: Date:

CONSULTANTS

FP&C CONSULTANTS
FIRE PROTECTION
FP&C CONSULTANTS KC, LLC
1330 Burlington Street, Ste. 200
North Kansas City, MO 64116

GRW engineering | architecture | geospatial
SECURITY
GRW
801 CORPORATE DRIVE
LEXINGTON, KY 40503

Insight ENGINEERING
MEP ENGINEER
INSIGHT ENGINEERING, PLLC
201 S. CHESTER, SUITE B
LITTLE ROCK, AR 72201

Bernhard TME Engineering
STRUCTURAL ENGINEER
BERNHARD TME
BUILDING 2, 1 ALLIED DRIVE
SUITE 260
LITTLE ROCK, AR 72202

ARCHITECT/ENGINEER OF RECORD
A/E
JohnsonDanforth & Associates
2200 N. RODNEY PARHAM ROAD
SUITE 210
LITTLE ROCK, AR 72212
501-404-4811
jda@JohnsonDanforth.com
JDA PROJECT #: 2018.001_

STAMP
BICSI
PATRICK BAUSDEN
BICSI ID# 363075
EXPIRES 12-31-22
2022-07-15

Office of Construction and Facilities Management
VA U.S. Department of Veterans Affairs

Drawing Title: SECURITY ELECTRONICS IDS RISER DIAGRAM	Phase: CONSTRUCTION DOCUMENTS	Project Title: CONSTRUCT NEW WATER STORAGE FACILITY	Project Number: 564-19-101
			Building Number:
Approved: Project Director	FULLY SPRINKLERED	Location: FAYETTEVILLE, AR	Drawing Number: TY603
		Issue Date: 2022.07.15 / Checked: PJB / Drawn: PJB	

VA FORM 08 - 6231