BERNALILLO COUNTY, NEW MEXICO

US Army Corps
of Engineers
Albuquerque District

KIRTLAND AIR FORCE BASE

COMBAT RESCUE HELICOPTER SIMULATOR

ATTACHMENT -

SOLICITATION NO. : W912PP23R0009

DATED : JUNE 2022

PROJECT NO. : MHMV163104

READY TO ADVERTISE

United States Army
Corps of Engineers
...Serving the Army
...Serving the Nation

Albuquerque District

SECTION 2 OF 2

JACOBS

JACOBS ENGINEERING GROUP, INC
777 MAIN STREET
FORT WORTH, TEXAS

COMBAT RESCUE HELICOPTER SIMULATOR

INDEX OF DRAWINGS

	GENERAL	
1	G-001	COVER SHEET
2	G-002	INDEX OF DRAWINGS
3	G-003	VICINITY MAP AND HAUL ROUTE
4	G-004	BID OPTIONS GENERAL ABBREVIATIONS AND LEGEND
	SURVEY	
5	V-100	EXISTING CONDITIONS PLAN
	GEOTECHNICAL	
6	B-601	SOIL BORING LOGS DETAIL
	CIVIL	
7	C-001	GENERAL NOTES AND LEGEND
8	C-002	EROSION AND SEDIMENT CONTROL NOTES
9	C-100	EROSION AND SEDIMENT CONTROL PLAN
10	C-501	EROSION AND SEDIMENT CONTROL DETAILS
11	C-502	EROSION AND SEDIMENT CONTROL DETAILS
12	CD100	DEMOLITION PLAN
13	CS100	OVERALL SITE PLAN
14	CS101	ENLARGED SITE PLAN CRHSF BUILDING
15	CS102	ENLARGED SITE PLAN POV PARKING AREA
16	CS501	SITE DETAILS
17	CS502	SITE DETAILS
18	CS503	SITE DETAILS
19	CG101	CRHSF BUILDING GRADING AND DRAINAGE PLAN
20	CG102	POV PARKING AREA GRADING AND DRAINAGE PLAN
21	CG501	GRADING AND DRAINAGE DETAILS
22	CU101	UTILITY PLAN CRHSF BUILDING
23	CU201	UTILITY PROFILES
24	CU501	UTILITY DETAILS
25	CU502	UTILITY DETAILS
	LANDSCAPE	
26	L-101	ENLARGED LANDSCAPE PLAN - CRHSF BUILDING
27	L-102	ENLARGED LANDSCAPE PLAN - POV PARKING AREA
28	L-501	PLANTING DETAILS
	BUILDING 951B	
	GENERAL	
29	GI010	CODE ANALYSIS
30	GI011	LIFE SAFETY PLAN - LEVEL 1
	STRUCTURAL	
31	S-001	GENERAL NOTES AND SYMBOLS
32	S-002	STRUCTURAL NOTES
33	S-003	STRUCTURAL NOTES
34	S-004	STRUCTURAL NOTES
35	S-005	COMPONENTS & CLADDING WIND DIAGRAM
36	SB110	OVERALL FOUNDATION PLAN - LEVEL 1
37	SB111	FOUNDATION PLAN - LEVEL 1 - AREA A
38	SB112	FOUNDATION PLAN - LEVEL 1 - AREA B
39	SB113	FOUNDATION PLAN - LEVEL 1 - AREA C
40	SF120	PLATFORM FRAMING PLAN - AREA B
41	SF140	OVERALL ROOF FRAMING PLAN
42	SF141	ROOF FRAMING PLAN - AREA A
43	SF142	ROOF FRAMING PLAN - AREA B
44	SF143	ROOF FRAMING PLAN - AREA C
45	SF144	HIGH ROOF FRAMING PLAN - AREA B
46	S-301	BUILDING SECTION
47	S-501	TYPICAL CONCRETE DETAILS
48	S-502	TYPICAL CONCRETE DETAILS
49	S-503	TYPICAL CONCRETE DETAILS
50	S-504	TYPICAL CONCRETE DETAILS
51	S-505	TYPICAL CONCRETE DETAILS
52	S-510	TYPICAL MASONRY DETAILS
53	S-511	TYPICAL MASONRY DETAILS
54	S-512	TYPICAL MASONRY DETAILS
55	S-530	TYPICAL STEEL DETAILS
56	S-531	TYPICAL STEEL DETAILS
57	S-532	TYPICAL STEEL DETAILS
58	S-535	STEEL SECTIONS AND DETAILS
59	S-536	SECTIONS AND DETAILS
	ARCHITECTURAL	
60	A-001	GENERAL NOTES AND SYMBOLS
61	AD100	BUILDING 954 DEMOLITION FLOOR PLAN
62	AE110	FLOOR PLAN - LEVEL 1 - OVERALL
63	AE111	FLOOR PLAN - LEVEL 1 - AREA A
64	AE112	FLOOR PLAN - LEVEL 1 - AREA B
65	AE113	FLOOR PLAN - LEVEL 1 - AREA C
66	AE140	OVERALL ROOF PLAN
67	AE141	ROOF PLAN - AREA A
68	AE142	ROOF PLAN - AREA B
69	AE143	ROOF PLAN - AREA C
70	AC110	REFLECTED CEILING PLAN - LEVEL 1 - OVERALL
71	AC111	REFLECTED CEILING PLAN - LEVEL 1 - AREA A
72	AC112	REFLECTED CEILING PLAN - LEVEL 1 - AREA B
73	AC113	REFLECTED CEILING PLAN - LEVEL 1 - AREA C

	BUILDING 951B	
	ARCHITECTURAL	
74	A-201	EXTERIOR ELEVATIONS
75	A-202	EXTERIOR ELEVATIONS
76	A-301	BUILDING SECTIONS
77	A-302	BUILDING SECTIONS
78	A-310	WALL SECTIONS
79	A-311	WALL SECTIONS
80	A-312	WALL SECTIONS
81	A-313	WALL SECTIONS
82	A-401	ENLARGED RESTROOM PLANS
83	A-402	RESTROOM ACCESSORIES
84	A-410	MECHANICAL YARD
85	A-440	PLATFORM
86	A-501	PLAN DETAILS
87	A-502	PLAN DETAILS
88	A-503	PLAN DETAILS
89	A-510	CEILING DETAILS
90	A-520	ROOF DETAILS
91	A-540	SECTION DETAILS
92	A-601	PARTITION TYPES
93	A-602	PENETRATION DETAILS
94	A-610	DOOR & FRAME SCHEDULE
95	A-612	INTERIOR DOOR DETAILS
96	A-615	EXTERIOR DOOR DETAILS
97	A-620	WINDOW AND LOUVER TYPES AND DETAILS
98	A-650	BID OPTION #6
	INTERIORS	
99	I-001	GENERAL NOTES AND SYMBOLS
100	IN110	OVERALL FINISH PLAN - LEVEL 1
101	IN111	PARTIAL FINISH AND SIGNAGE PLAN - AREA A
102	IN112	PARTIAL FINISH AND SIGNAGE PLAN - LEVEL 1 - AREA B
103	IN113	PARTIAL FINISH AND SIGNAGE PLAN - AREA C
104	IF110	OVERALL FURNITURE, FIXTURES, & EQUIPMENT PLAN
105	IF111	PARTIAL FURNITURE, FIXTURES, & EQUIPMENT PLAN - AREA A
106	IF112	PARTIAL FURNITURE, FIXTURES, & EQUIPMENT PLAN – LEVEL 1- AREA B
107	IF113	PARTIAL FURNITURE, FIXTURES, & EQUIPMENT PLAN – LEVEL 1- AREA B BID O
108	IF114	PARTIAL FURNITURE, FIXTURES, & EQUIPMENT PLAN - AREA C
109	I-401	INTERIOR ELEVATIONS AND ENLARGED PLANS
110	I-402	INTERIOR ELEVATIONS AND ENLARGED PLANS
111	I-403	ENLARGED PLANS
112	I-501	MILLWORK ELEVATIONS, SECTIONS AND DETAILS
113	I-502	MILLWORK ELEVATIONS, SECTIONS AND DETAILS
114	I-610	FINISH MATERIAL LEGEND/ ROOM FINISH SCHEDULE
115	I-611	SIGNAGE SCHEDULE
	FIRE PROTECTION	
116	F-001	FIRE PROTECTION GENERAL NOTES, LEGENDS AND SYMBOLS
117	F-100	FIRE PROTECTION CODE COMPLIANCE SITE PLAN
118	F-110	FIRE SPRINKLER PLAN - LEVEL 1 - OVERALL
119	F-301	FIRE PROTECTION SECTION
120	F-501	FIRE SPRINKLER DETAILS
	FIRE ALARM	
121	FA110	OVERALL ABOVE FLOOR FIRE ALARM PLAN
122	FA111	OVERALL UNDERFLOOR FIRE ALARM PLAN
123	FA112	PLATFORM FIRE ALARM PLAN
124	FA501	FIRE ALARM DETAILS
125	FA502	FIRE ALARM DETAILS
126	FX501	CLEAN AGENT DETAILS
	PLUMBING	
127	P-001	GENERAL NOTES AND SYMBOLS
128	P-100	UNDERFLOOR PLAN - OVERALL
129	P-101	PARTIAL UNDERFLOOR PLAN - AREA A
130	P-102	PARTIAL UNDERFLOOR PLAN - AREA B
131	P-103	PARTIAL UNDERFLOOR PLAN - AREA C
132	P-110	FLOOR PLAN - LEVEL 1 - OVERALL
133	P-111	FLOOR PLAN - LEVEL 1 - AREA A
134	P-112	FLOOR PLAN - LEVEL 1 - AREA B
135	P-113	FLOOR PLAN - LEVEL 1 - AREA C
136	P-140	ROOF PLAN - OVERALL
137	P-401	ENLARGED PLUMBING PLANS
138	P-501	PLUMBING DETAILS
139	P-502	PLUMBING DETAILS
140	P-503	PLUMBING DETAILS
141	P-601	PLUMBING SCHEDULES
142	P-701	RISER DIAGRAMS
143	P-801	PLUMBING SCHEMATICS
	MECHANICAL	
144	M-001	GENERAL NOTES AND SYMBOLS
145	MH110	HVAC FLOOR PLAN - LEVEL 1 - OVERALL
146	MH111	HVAC PLAN - LEVEL 1 - AREA A
147	MH112	HVAC PLAN - LEVEL 1 - AREA B

SECTION 1

	BUILDING 951B	
	MECHANICAL	
148	MH113	HVAC PLAN - LEVEL 1 - AREA C
149	MH120	HVAC & PIPING PLAN - MEZZANINE
150	MP110	HVAC PIPING PLAN - LEVEL 1 - OVERALL
151	MP111	HVAC PIPING PLAN - LEVEL 1 - AREA A
152	MP112	HVAC PIPING PLAN - LEVEL 1 - AREA B
153	MP113	HVAC PIPING PLAN - LEVEL 1 - AREA C
154	M-301	MECHANICAL SECTIONS
155	M-401	ENLARGED MECHANICAL PLANS
156	M-501	MECHANICAL DETAILS
157	M-502	MECHANICAL DETAILS
158	M-503	MECHANICAL DETAILS
159	M-504	MECHANICAL DETAILS
160	M-505	MECHANICAL DETAILS
161	M-506	MECHANICAL DETAILS
162	M-601	MECHANICAL SCHEDULES
163	M-602	MECHANICAL SCHEDULES
164	M-701	CHW FLOW DIAGRAM
165	M-702	HW FLOW DIAGRAM
166	M-703	AIRFLOW DIAGRAM
167	M-801	CONTROLS
168	M-802	CONTROLS
169	M-803	CONTROLS
170	M-804	CONTROLS
171	M-805	CONTROLS
172	M-806	CONTROLS
173	M-807	CONTROLS
174	M-808	CONTROLS
175	M-809	CONTROLS
	ELECTRICAL	
176	E-001	GENERAL NOTES AND SYMBOLS
177	ED101	SITE PLAN - DEMOLITION
178	ES101	SITE PLAN - OVERALL
179	EL111	LIGHTING PLAN - LEVEL 1 - AREA A
180	EL112	LIGHTING PLAN - LEVEL 1 - AREA B
181	EL113	LIGHTING PLAN - LEVEL 1 - AREA C
182	EL120	LIGHTING PLAN - MEZZANINE
183	EP110	POWER PLAN - LEVEL 1 - OVERALL
184	EP111	POWER PLAN - LEVEL 1 - AREA A
185	EP112	POWER PLAN - LEVEL 1 - AREA B
186	EP113	POWER PLAN - LEVEL 1 - AREA C
187	EP120	POWER PLAN - MEZZANINE
188	EP140	LIGHTNING PROTECTION PLAN
189	EG100	GROUNDING PLAN - OVERALL
190	E-401	ENLARGED POWER PLANS
191	E-501	DETAILS
192	E-502	DETAILS
193	E-503	DETAILS
194	E-601	SCHEDULES
195	E-602	SCHEDULES
196	E-603	SCHEDULES
197	E-604	SCHEDULES
198	E-605	SCHEDULES
199	E-701	ONE-LINE DIAGRAM
	TELECOMMUNICATIONS	
200	T-001	GENERAL NOTES AND SYMBOLS
201	T-101	TEMP TRAILER SITE PLAN
202	T-110	OVERALL FLOOR PLAN - LEVEL 1
203	T-111	TELECOM FLOOR PLAN - LEVEL 1 - AREA A
204	T-112	TELECOM FLOOR PLAN - LEVEL 1 - AREA B
205	T-113	TELECOM FLOOR PLAN - LEVEL 1 - AREA C
206	T-401	ENLARGED PLANS
207	T-402	ENLARGED PLANS
208	T-403	ENLARGED PLANS
209	T-404	BID OPTION 1 - TELECOM - ENLARGED PLAN
210	T-501	DETAILS
211	T-502	DETAILS
212	T-503	DETAILS
213	T-504	DETAILS
214	T-505	DETAILS
215	T-601	ONE-LINE DIAGRAMS
216	T-602	ONE-LINE DIAGRAMS
217	TY110	SECURITY PLAN - LEVEL 1 - OVERALL
218	TY111	PARTIAL FLOOR PLAN - LEVEL 1 - AREA A
219	TY112	PARTIAL FLOOR PLAN - LEVEL 1 - AREA B
220	TY113	PARTIAL FLOOR PLAN - LEVEL 1 - AREA C
221	TY402	BID OPTION 1 - SECURITY ENLARGED PLAN
222	TY501	DETAILS
223	TY502	DETAILS
224	TY601	ONE-LINE DIAGRAMS

	BUILDING 923	
	GENERAL	
225	GI010	CODE ANALYSIS
226	GI011	LIFE SAFETY PLAN - LEVEL 1
	ARCHITECTURAL	
227	A-001	GENERAL NOTES AND SYMBOLS
228	AD110	DEMOLITION FLOOR PLAN
229	AD111	CEILING DEMOLITION PLAN
230	AE110	FLOOR PLAN - LEVEL 1
231	AC110	REFLECTED CEILING PLAN
232	A-401	RESTROOM ACCESSORIES AND ENLARGED RESTROOM PLANS
233	A-501	PLAN AND SECTION DETAILS
234	A-504	PENETRATION DETAILS
235	A-510	CEILING DETAILS
236	A-511	ENLARGED REFLECTED CEILING PLANS
237	A-601	PARTITION TYPES
238	A-610	DOOR & FRAME SCHEDULE
239	A-614	INTERIORS DOOR DETAILS
	INTERIORS	
240	I-001	GENERAL NOTES AND SYMBOLS
241	IN110	OVERALL FINISH PLAN - LEVEL 1
242	IF110	FURNITURE, FIXTURES, & EQUIPMENT PLAN - LEVEL 1
243	I-410	INTERIOR ELEVATIONS AND ENLARGED PLANS
244	I-510	MILLWORK AND DETAILS
245	I-610	FINISH MATERIAL LEGEND/ ROOM FINISH SCHEDULE
246	I-611	SIGNAGE SCHEDULE/SIGNAGE DETAILS
	FIRE ALARM	
247	F-001	GENERAL NOTES AND SYMBOLS
248	F-002	FIRE PROTECTION CODE COMPLIANCE SITE PLAN
249	FA110	OVERALL FIRE ALARM PLAN - LEVEL 1
250	FA501	FIRE ALARM DETAILS
	PLUMBING	
251	P-001	GENERAL NOTES AND SYMBOLS
252	PD110	OVERALL DEMOLITION PLAN - BASE BID
253	PD111	OVERALL DEMOLITION PLAN - BID OPTIONS
254	P-110	FLOOR PLAN - LEVEL 1
255	P-401	ENLARGED PLANS
256	P-601	PLUMBING SCHEDULES
257	P-701	PLUMBING DIAGRAMS AND DETAILS
	MECHANICAL	
258	M-001	GENERAL NOTES AND SYMBOLS
259	MD110	OVERALL DEMOLITION PLAN
260	MH110	OVERALL FLOOR PLAN - LEVEL 1
261	M-501	MECHANICAL DETAILS
262	M-801	MECHANICAL CONTROLS
	ELECTRICAL	
263	E-001	GENERAL NOTES AND SYMBOLS
264	ED110	LIGHTING DEMOLITION PLAN
265	ED111	POWER DEMOLITION PLAN
266	EL110	LIGHTING PLAN
267	EP110	POWER PLAN
268	E-401	ENLARGED POWER PLAN
269	E-501	DETAILS
270	E-601	LUMINAIRE SCHEDULE
271	E-602	PANEL SCHEDULES
272	E-603	SCHEDULES
273	E-701	ONE-LINE DIAGRAM
	TELECOMMUNICATIONS	
274	T-001	GENERAL NOTES AND SYMBOLS
275	TD110	TELECOM DEMOLITION PLAN - BASE BID
276	TD111	TELECOM DEMOLITION PLAN - BID OPTION 1
277	TD112	TELECOM DEMOLITION PLAN - BID OPTION 7
278	T-110	TELECOM PLAN - BASE BID
279	T-111	TELECOM PLAN - BID OPTION 1
280	T-112	TELECOM PLAN - BID OPTION 2
281	T-113	TELECOM PLAN - BID OPTION 3
282	T-115	TELECOM PLAN - BID OPTION 8
283	T-401	ENLARGED TELECOM PLAN
284	T-501	DETAILS
285	T-502	DETAILS
286	T-503	DETAILS
287	T-701	ONE-LINE DIAGRAM

SECTION 2

REGISTERED ARCHITECT RICHARD G. PERRY, JR. 76592 STATE OF TEXAS
6.24.2021

US Army Corps of Engineers®

MARK	DESCRIPTION	DATE

DESIGNED BY: V GARSKE
DRAWN BY: V GARSKE
CHECKED BY: J McKINNEY
SUBMITTED BY: E OLMESS
SIZE: ANSI D
ISSUE DATE: JUNE 2022
CONTRACT NO.: W912PP-22-R-0021
FILENAME: KA69-G-002.dwg

U.S. ARMY CORPS OF ENGINEERS
ALBUQUERQUE DISTRICT
ALBUQUERQUE, NEW MEXICO

JACOBS
JACOBS ENGINEERING GROUP INC.
777 Main Street
Fort Worth, TX 76102

COMBAT RESCUE HELICOPTER SIMULATOR FACILITY
KIRTLAND AIR FORCE BASE (AFB)
BERNALILLO COUNTY, NEW MEXICO

GENERAL
INDEX OF DRAWINGS

SHEET ID
G-002

READY TO ADVERTISE

DRAWING ABBREVIATIONS

A	----------
ACC	AIR COOLED CHILLER
AD	AIR DEVICE
AFF	ABOVE FINISHED FLOOR
AFG	ABOVE FINISHED GRADE
AHU	AIR HANDLING UNIT
AL	ACOUSTICAL LINING
AS	AIR SEPARATOR
B	----------
BOD	BOTTOM OF DUCT
BOP	BOTTOM OF PIPE
C	----------
C	CONDENSATE
CFM	CUBIC FEET PER MINUTE
CH	CHILLER
CHR	CHILLED WATER RETURN
CHS	CHILLED WATER SUPPLY
CR	CONDENSATE RETURN (STEAM)
CSAC	CREW STATION AIR CONDITIONING
CU	CONDENSING UNIT
CWR	CONDENSER WATER RETURN
CWS	CONDENSER WATER SUPPLY
D	----------
DB	DRY BULB
DOAU	DEDICATED OUTDOOR AIR UNIT
DX	DIRECT EXPANSION
E	----------
EA	EXHAUST AIR
ECU	EVAPORATIVE COOLING UNIT
EF	EXHAUST FAN
ERP	ENERGY RECOVER PUMP
ERR	ENERGY RECOVERY WATER RETURN
ERS	ENERGY RECOVERY WATER SUPPLY
ERU	ENERGY RECOVERY UNIT
ET	EXPANSION TANK
F	----------
FC	FLEXIBLE CONNECTION
FCU	FAN COIL UNIT
FD	FIRE DAMPER
FMS	FLOW MEASURING STATION
FO	FAIL OPEN
FPM	FEET PER MINUTE
G	----------
GR	GLYCOL RETURN
GS	GLYCOL SUPPLY
H	----------
HC	HEATING COIL
HP	HEAT PUMP
HPS	HIGH PRESSURE STEAM
HVU	HEAT AND VENT UNIT
HWR	HOT WATER RETURN
HWS	HOT WATER SUPPLY
I	----------
IHP	INVERTER HEAT PUMP
L	----------
LPS	LOW PRESSURE STEAM
LVR	LOUVER
M	----------
MAU	MAKE-UP AIR UNIT
MD	MOTORIZED DAMPER
MPS	MEDIUM PRESSURE STEAM
N	----------
NTS	NOT TO SCALE
O	----------
OA	OUTDOOR AIR
P	----------
PROVIDE	FURNISH AND INSTALL
PICV	PRESSURE INDEPENDENT CONTROL VALVE
R	----------
RA	RETURN AIR
RH	RADIANT HEATER
RM	RADIANT MANIFOLD
S	----------
S	STEAM (AND CONDENSATE)
SA	SUPPLY AIR
SAD	SUPPLY ATTENUATOR DEVICE
SM	SNOW MELT MANIFOLD
T	----------
TU	TERMINAL UNIT
V	----------
VAV	VARIABLE AIR VOLUME
VD	VOLUME DAMPER
VP	VACUUM PUMP FOR RADIANT HEATER
W	----------
WB	WET BULB
Z	----------
ZSB	ZONE SELECTOR BOX

PIPING LABELS

CHS	CHILLED WATER SUPPLY
CHR	CHILLED WATER RETURN
CWS	CONDENSER WATER SUPPLY
CWR	CONDENSER WATER RETURN
HWS	HEATING WATER SUPPLY
HWR	HEATING WATER RETURN
CD	CONDENSATE DRAIN
D	DRAIN
GS	GLYCOL SUPPLY
GR	GLYCOL RETURN
MU	MAKE-UP WATER
RS/L	REFRIGERANT SUCTION & LIQUID
RFR	RADIANT FLOOR HEATING WATER RETURN
RFS	RADIANT FLOOR HEATING WATER SUPPLY
SMR	SNOW MELT HEATING WATER RETURN
SMS	SNOW MELT HEATING WATER SUPPLY
xx AAA xx	PIPE TO BE REMOVED, "AAA" DENOTES TYPE
AAA	EXISTING PIPE, "AAA" DENOTES TYPE
AAA	UNDERGROUND PIPE, "AAA" DENOTES TYPE

LEGEND

DUCTWORK SYMBOLS

- XX/XX — MECHANICAL DUCT
- MANUAL VOLUME DAMPER (SEE BELOW FOR OTHER TYPES)
- DAMPER TYPE:
  - FD - FIRE DAMPER
  - SD - SMOKE DAMPER
  - FSD - COMBINATION FIRE/SMOKE DAMPER
  - BD - GRAVITY BACKDRAFT DAMPER
  - CD - CONTROL DAMPER
  - *NO MARK INDICATES MANUAL VOLUME DAMPER
- VERTICAL DAMPER IN DUCT (OR OPENING) AT FIRE-RATED PARTITION
- HORIZONTAL FIRE DAMPER AT FLOOR PENETRATION
- CONNECT NEW DUCT TO EXISTING
- VANED ELBOW (PROVIDE VANES IN ALL SQUARE OR RECTANGULAR ELBOWS, UNLESS NOTED OTHERWISE)
- FAN POWERED TERMINAL UNIT
- TYPICAL SUPPLY AIR TEE WITH SPLITTER DAMPER
- STANDARD ROUND BRANCH DUCT (SPIN-IN)
- STANDARD ROUND BRANCH DUCT (CONICAL)
- STANDARD RECTANGULAR BRANCH DUCT (45° TAKE-OFF)
- STANDARD CONCENTRIC DUCT TRANSITION
- STANDARD ECCENTRIC DUCT TRANSITION
- RECTANGULAR-TO-ROUND DUCT TRANSITION
- SECTION THROUGH ROUND DUCT, SUPPLY OR EXHAUST AS NOTED
- SECTION THROUGH RECTANGULAR SUPPLY DUCT
- SECTION THROUGH RECTANGULAR RETURN DUCT
- SECTION THROUGH RECTAN-GULAR EXHAUST DUCT
- A.D. — ACCESS DOOR IN CEILING
- A.D. — DUCT ACCESS DOOR
- CEILING SUPPLY AIR DIFFUSER, ARROWS INDICATE PATTERN. NO PATTERN SHOWN EQUALS 4-WAY
- CEILING RETURN AIR GRILLE OR RETURN REGISTER
- CEILING EXHAUST AIR GRILLE OR EXHAUST REGISTER
- SIDEWALL SUPPLY OR RETURN REGISTER OR GRILLE
- SUPPLY OR OUTSIDE AIR DUCT UP
- SUPPLY OR OUTSIDE AIR DUCT DOWN
- RETURN AIR DUCT UP
- RETURN AIR DUCT DOWN
- RELIEF OR EXHAUST AIR DUCT UP
- RELIEF OR EXHAUST AIR DUCT DOWN
- IN-LINE 90 DEGREE DROP (RISE) IN DUCT
- UP — INCLINE RISE IN DUCT
- DOWN — INCLINE DROP IN DUCT
- VAV TERMINAL UNIT
- FLEXIBLE DUCT, SIZE AS SHOWN

PIPING SYMBOLS

- PITCH DOWN IN DIRECTION OF ARROW
- DIRECTION OF FLOW
- PIPE ANCHOR
- PIPE GUIDE
- CONCENTRIC REDUCER
- ECCENTRIC REDUCER
- STRAINER WITH BLOWDOWN VALVE
- BRANCH - SIDE CONNECTION
- BRANCH - TOP CONNECTION
- BRANCH - BOTTOM CONNECTION
- RISE OR DROP IN PIPE
- RISER DOWN (ELBOW)
- RISER UP (ELBOW)
- CAPPED PIPE
- BLIND FLANGE
- UNION (SCREWED)
- PUMP
- FLANGED CONNECTION
- TEMPERATURE & PRESSURE PORT
- FLEX PIPE
- FLEX CONNECTION
- BELLOWS CONNECTION (DOUBLE SPHERE NEOPRENE TYPE)
- THERMOMETER
- PRESSURE GAGE WITH COCK
- PS — PRESSURE SWITCH
- FS — FLOW SWITCH
- MANUAL AIR VENT
- AUTOMATIC AIR VENT

EQUIPMENT SYMBOLS

- NEW EQUIPMENT
- EQUIPMENT CLEARANCE

MISCELLANEOUS

- (001) — KEYNOTE
- POINT OF CONNECTION - NEW TO EXISTING
- FTR - A - B
  - A = SCHEDULE TYPE
  - B = FEET OF ACTIVE LENGTH

CONTROLS SYMBOLS

- T — ROOM THERMOSTAT
- H — ROOM HUMIDISTAT
- T — TEMPERATURE SENSOR/TRANSMITTER
- H — HUMIDITY SENSOR/TRANSMITTER
- S — DUCT SMOKE DETECTOR
- R — RELAY
- ST — SLAB SENSOR
- VIBRATION SWITCH
- HT — DUCT HUMIDITY SENSOR/TRANSMITTER
- PT — PRESSURE TRANSMITTER
- MOTOR STARTER (LOCAL OR MCC)
- SP — STATIC PRESSURE SENSOR/TRANSMITTER
- DT — DIFFERENTIAL PRESSURE SENSOR/TRANSMITTER
- DP — DIFFERENTIAL PRESSURE SWITCH (DIGITAL)
- T — DUCT AVERAGING TEMPERATURE ELEMENT
- F — FLOW SENSOR
- FR — FREEZESTAT
- FS — FLOW SWITCH
- M — ELECTRIC MOTOR
- RS — REFRIGERANT SENSOR
- LIQUID FLOW METER
- RECEIVER PRESSURE GAUGE (PANEL MTD.)
- CT — CURRENT SENSING RELAY
- DA — ELECTRIC DAMPER ACTUATOR
- CD — CARBON DIOXIDE (C02) SENSOR
- CM — CARBON MONOXIDE (C0) SENSOR
- F — FIRESTAT
- HS — MANUALLY ACTIVATED SWITCH (PULL STAT., PUSH STAT., ETC)
- AQ — AQUASTAT

CONTROL VALVE SYMBOLS:

- M — ELECTRIC ACTUATOR
- S — SOLENOID ACTUATOR

CONTROL DEFINITIONS:

NORMAL POSITION: INDICATES DEVICE POSITION WHEN THE SYSTEM IS DISABLED OR NOT ENERGIZED

FAIL POSITION: INDICATES DEVICE POSITION WHEN THE CONTROL SIGNAL IS LOST OR UPON A LOSS OF POWER.

NO - NORMALLY OPEN
NC - NORMALLY CLOSED
FO - FAIL OPEN
FC - FAIL CLOSED

NORMAL OPEN	NORMAL CLOSED	
		GATE VALVE
		VALVE W/ REDUCERS (GATE VALVE SHOWN)
		GLOBE VALVE
		BUTTERFLY VALVE
		NEEDLE VALVE/ INSTRUMENT VALVE
		3-WAY VALVE
		BALL VALVE
		PLUG VALVE
		ANGLE VALVE

EQUIPMENT TAG SYMBOLS

AIR DEVICE TAG

AD - X | 380 — TAG; MAXIMUM AIRFLOW (CFM)

24/12 — INDICATES A 24"x12" RECTANGULAR DUCT (NET FREE AREA)

20"ø — INDICATES A 20" ROUND DUCT (NET FREE AREA)

VALVE SYMBOLS

- GATE VALVE
- GLOBE VALVE
- CHECK VALVE (NON SLAM)
- PLUG VALVE
- PRESSURE REDUCING VALVE (PRV)
- BUTTERFLY VALVE
- BALL VALVE
- NEEDLE VALVE
- VENTURI FLOW METER
- VALVE IN DROP
- VALVE IN CENTER DROP
- VALVE IN RISE
- S — SOLENOID VALVE
- GATE VALVE W/ 3/4" HOSE THREAD ADAPTER
- TWO-WAY CONTROL VALVE
- THREE-WAY CONTROL VALVE
- SAFETY VALVE OR PRESSURE RELIEF VALVE
- MANUAL BALANCING VALVE
- AUTOMATIC BALANCING VALVE
- TEMPERATURE WELL
- FLANGED VALVE (GATE VALVE SHOWN)
- P — PRESSURE INDEP. CONTROL VALVE (PICV)

HVAC DESIGN CRITERIA

DESIGN CONDITIONS

WEATHER STATION - ALBUQUERQUE, NM
STATION #: WMO 723650
ELEVATION: 5404 FEET; LATITUDE: 35.04°N; LONGITUDE: 106.62°W
ASHRAE CLIMATE ZONE 7

WINTER: 21.9°F (IN ACCORDANCE WITH SW DIVISION AEIM)

SUMMER: SUMMER: 93.3°F DB / 59.7°F WB (IN ACCORDANCE WITH SW DIVISION AEIM); SUMMER EVAPORATION: 65.3°F WB / 80.6°F DB (1.0% OCCURENCE)

INDOOR DESIGN CONDITIONS

WINTER: 68°F ± 2°F (OFFICE/ADMIN AREAS)
68°F ± 2°F (COMMUNICATION ROOMS)
68°F ± 5°F & 20-80% RH (SIMULATOR BAYS)
55°F ± 2°F (UNOCCUPIED SPACES)

SUMMER: 78°F ± 2°F & 55°F DP (OFFICE/ADMIN AREAS)
68°F ± 5°F & 20-80% RH (SIMULATOR BAYS)
72°F ± 2°F (COMMUNICATION ROOMS)
85°F ± 2°F (UNOCCUPIED SPACES)

ENERGY CODE COMPLIANCE
THE MECHANICAL AND PLUMBING EQUIPMENT IN THESE DRAWINGS ARE IN COMPLIANCE WITH ASHRAE 189.1-2014 AND UFC 1-200-02. THE HVAC LOADS WERE PERFORMED IN ACCORDANCE WITH ASHRAE FUNDAMENTALS. ENERGY CALCULATIONS WERE PERFORMED IN ACCORDANCE WITH ASHRAE 90.1-2013.

GENERAL NOTES

A. REFER TO SPECIFICATIONS FOR MATERIALS AND METHODS FOR CONSTRUCTION.
B. COORDINATE LOCATION OF ALL PENETRATIONS WITH THE BUILDING STRUCTURE.
C. COORDINATE ALL SLAB PENETRATIONS AND SLEEVES PRIOR TO EACH CONCRETE POUR.
D. PERFORM WORK IN ACCORDANCE WITH THE LATEST EDITIONS, REVISIONS, AMENDMENTS OR SUPPLEMENTS OF APPLICABLE STATUTES, ORDINANCES, CODES, OR REGULATIONS OF FEDERAL AUTHORITIES HAVING JURISDICTION.
E. WHERE APPROVAL CODES HAVE BEEN ESTABLISHED BY OSHA, UNDERWRITERS LABORATORY, AMERICAN CODES, ANSI, ASME, ABAAG, ASHRAE, ASTM, ARI, NEC, NFPA SMACNA, OR REGULATORY BODY, FOLLOW THESE STANDARDS WHETHER OR NOT INDICATED ON THE DRAWINGS.
F. COORDINATE WORK WITH ARCHITECTURAL FEATURES AND COORDINATE WORK SUCH THAT INTERFERENCES BETWEEN PIPING, DUCTWORK, EQUIPMENT, PLUMBING WORK, ELECTRICAL WORK, AND BUILDING STRUCTURE WILL BE AVOIDED.
G. PROVIDE THE ENTIRE SYSTEM AND ITS COMPONENT ITEMS OF EQUIPMENT IN OPERATING CONDITION WITHOUT OBJECTIONABLE VIBRATION OR NOISE IN ACCORDANCE WITH ARI 3-450-01 AND ASHRAE APPLICATIONS HANDBOOK.
H. PROVIDE ALL WIRING AND ELECTRICAL CONTROLS IN ACCORDANCE WITH NFPA 70 (NEC).
J. DO NOT SCALE THESE DRAWINGS FOR CONSTRUCTION PURPOSES.
K. ALL DUCTWORK SIZES ARE FREE AIR DIMENSIONS.
L. PAINT ANY ABOVE CEILING ITEMS, WHICH CAN BE SEEN THROUGH AIR SLOTS OR GRILLES, FLAT BLACK.
M. PROVIDE PLENUM RATED CABLE, DEVICES, PIPING, ETC. IN PLENUM SPACE.
N. PROVIDE TEMPORARY 30% EFFICIENT, 2" THICK FILTERS OVER RETURN AIR OPENINGS OF ANY AHU'S WHICH ARE PLACED IN SERVICE PRIOR TO COMPLETION OF CONSTRUCTION. REMOVE FILTERS FOR TEST & BALANCE.
P. DUCT AND PIPE HANGERS IN UNCONDITIONED SPACE OR EXTERIOR TO BUILDING SHALL BE GALVANIZED STEEL.
Q. PROVIDE ACCESS PANELS FOR ALL DAMPER ACTUATORS AND MOTORS LOCATED INSIDE DUCT OR FAN HOUSING.
R. REFER TO STRUCTURAL DRAWINGS FOR FRAMING REQUIRED AROUND PIPES AND DUCTS PENETRATING ROOFS, WALLS, AND FLOORS.
S. COORDINATE LOCATION OF THERMOSTATS, CO2 SENSORS, AND HUMIDITY SENSORS WITH F.F.E. PLANS.
T. REFER TO STRUCTURAL PLANS FOR ADDITIONAL INFORMATION ON SEISMIC REQUIREMENTS.

DESIGN NARRATIVE

BUILDING 951B PACKAGE:

THIS CONSTRUCTION PACKAGE IS FOR THE EXPANSION OF EXISTING BUILDING 951A TO THE NORTH. BUILDINGS WILL BE ADJOINED BY A COMMON CORRIDOR. MECHANICAL SYSTEMS SERVING BUILDING 951B ARE INDEPENDENT OF BUILDING 951A.

BUILDING 951B UTILIZES AIR COOLED CHILLERS AND GAS FIRED BOILERS FOR HEATING AND COOLING. CHILLED WATER AND HYDRONIC HOT WATER ARE PUMPED TO AIR HANDLING UNITS (AHU) AND COMPUTER ROOM AIR CONDITIONING UNITS (CRAC). HOT WATER IS PUMPED TO AIR TERMINAL UNITS WITH REHEAT COILS (TU).

THE SIMULATOR MANUFACTURER IS TO PROVIDE THE HEATING & COOLING SYSTEMS FOR THE SIMULATORS IN THE SIMULATOR BAY AREAS. MECHANICAL CONTRACTOR IS TO CONNECT CONDENSING UNITS SERVING THE SIMULATORS TO THE HYDRONIC HEATING & COOLING SYSTEMS SERVING THE REST OF THE BUILDING.

THE TELECOMMUNICATIONS ROOM IS COOLED BY A DX SPLIT SYSTEM.

INLINE FANS ARE USED TO EXHAUST AIR FROM RESTROOMS, JANITOR CLOSETS, AND THE UNDERFLOOR OF THE IMAGE GENERATING ROOMS.

STATE OF TEXAS
BRANDEN M. SCHNEIDER
129852
LICENSED PROFESSIONAL ENGINEER
6.24.2021

US Army Corps of Engineers ®

MARK	DESCRIPTION	DATE

DESIGNED BY: B. SCHNEIDER
DRAWN BY: A. CLEAR
CHECKED BY: A. FORAN
SUBMITTED BY: E. FLORES
ANSI D

ISSUE DATE: JUNE 2022
CONTRACT NO.: W912PP-22-R-0021
FILENAME: K4089-951-M-001

US ARMY CORPS OF ENGINEERS
ALBUQUERQUE
ALBUQUERQUE, NEW MEXICO

JACOBS®
JACOBS ENGINEERING GROUP INC.
777 Main Street
Fort Worth, TX 76102

COMBAT RESCUE HELICOPTER SIMULATOR FACILITY
KIRTLAND AIR FORCE BASE (AFB),
BERNALILLO COUNTY, NEW MEXICO

CRH SIMULATOR FACILITY ADAL
GENERAL NOTES AND SYMBOLS

SHEET ID
951B
M-001

READY TO ADVERTISE

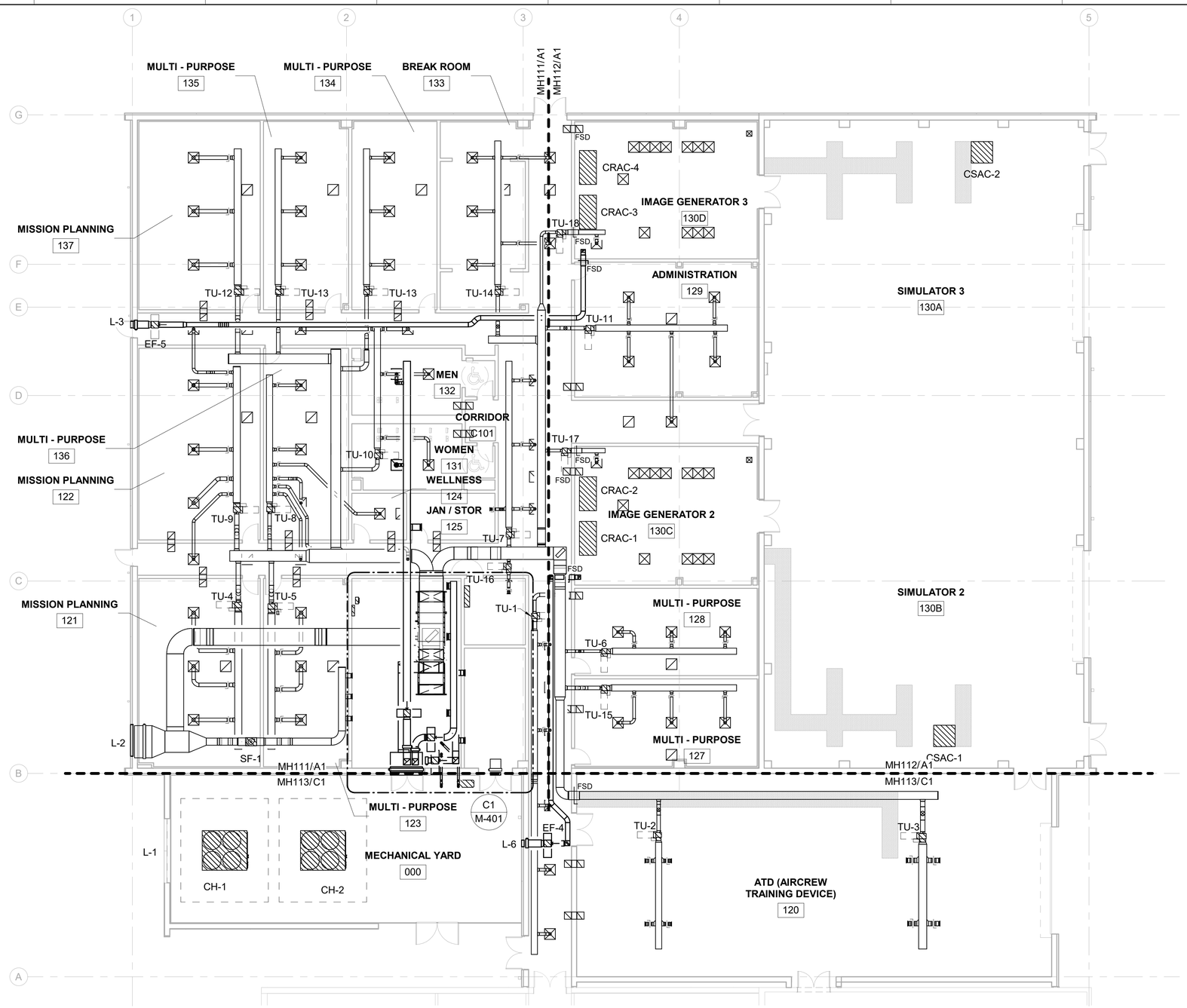

A1 HVAC FLOOR PLAN - LEVEL 1 - OVERALL

3/32" = 1'-0"

GENERAL NOTES

A	MAINTAIN MANUFACTURER'S RECOMMENDED CLEARANCES ON ALL EQUIPMENT.
B	PROVIDE CLEARANCES FOR ALL ELECTRICAL AND CONTROL PANELS PER NEC.
C	REFER TO PIPING PLANS FOR THERMOSTAT ASSIGNMENTS.
D	COORDINATE THERMOSTATS WITH FURNISHINGS. LOCATE THERMOSTATS 6" ON CENTER FROM LIGHT SWITCH. MOUNT TOP OF THERMOSTAT AS SHOWN AT ADA APPROVED MOUNTING HEIGHT.
E	PROVIDE U.L. RATED THROUGH PENETRATION FIRE STOP SYSTEMS AT ALL PENETRATIONS THROUGH RATED WALLS.
F	PROVIDE BALANCING DAMPER AT EACH TAKEOFF.
G	ALL MITERED ELBOWS HAVE TURNING VANES.
H	EQUIPMENT, DUCTWORK, AND PIPING SHALL BE BASED, SUPPORTED AND RESTRAINED TO MEET SEISMIC REQUIREMENTS.
I	REFER TO ARCH DRAWINGS FOR LOUVER SIZES
J	PROVIDE LOW LEAKAGE MOTORIZED ISOLATION DAMPERS AT WALL LOUVERS FOR EMERGENCY AIR DISTRIBUTION SHUTOFF.
K	PRIMARY DUCT INLET SIZE WILL MATCH BRANCH DUCT SIZE UNLESS OTHERWISE INDICATED.

KEY PLAN

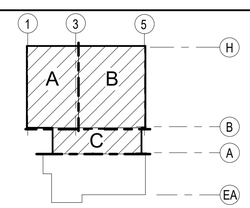

GRAPHIC SCALE

8 0 8 16 24

Scale: 3/32 INCH = 1 FOOT

PROJECT NORTH

PLAN NORTH

STATE OF TEXAS
BRANDEN M. SCHNEIDER
129852
LICENSED
PROFESSIONAL ENGINEER
6.24.2021

US Army Corps of Engineers ®

MARK	DESCRIPTION	DATE

ISSUE DATE: JUNE 2022
CONTRACT NO.: W912PP-22-R-0021

DESIGNED BY: B. SCHNEIDER
DRAWN BY: A. CLEAR
CHECKED BY: A. FORAN
SUBMITTED BY: E. OLINESS
SIZE: ANSI D
FILENAME: KA69951-MH110

US ARMY CORPS OF ENGINEERS
ALBUQUERQUE
ALBUQUERQUE, NEW MEXICO

JACOBS
JACOBS ENGINEERING GROUP INC.
777 Main Street
Fort Worth, TX 76102

COMBAT RESCUE HELICOPTER SIMULATOR FACILITY
KIRTLAND AIR FORCE BASE (AFB),
BERNALILLO COUNTY, NEW MEXICO

CRH SIMULATOR FACILITY ADAL
HVAC FLOOR PLAN - LEVEL 1 - OVERALL

SHEET ID
951B
MH110

READY TO ADVERTISE

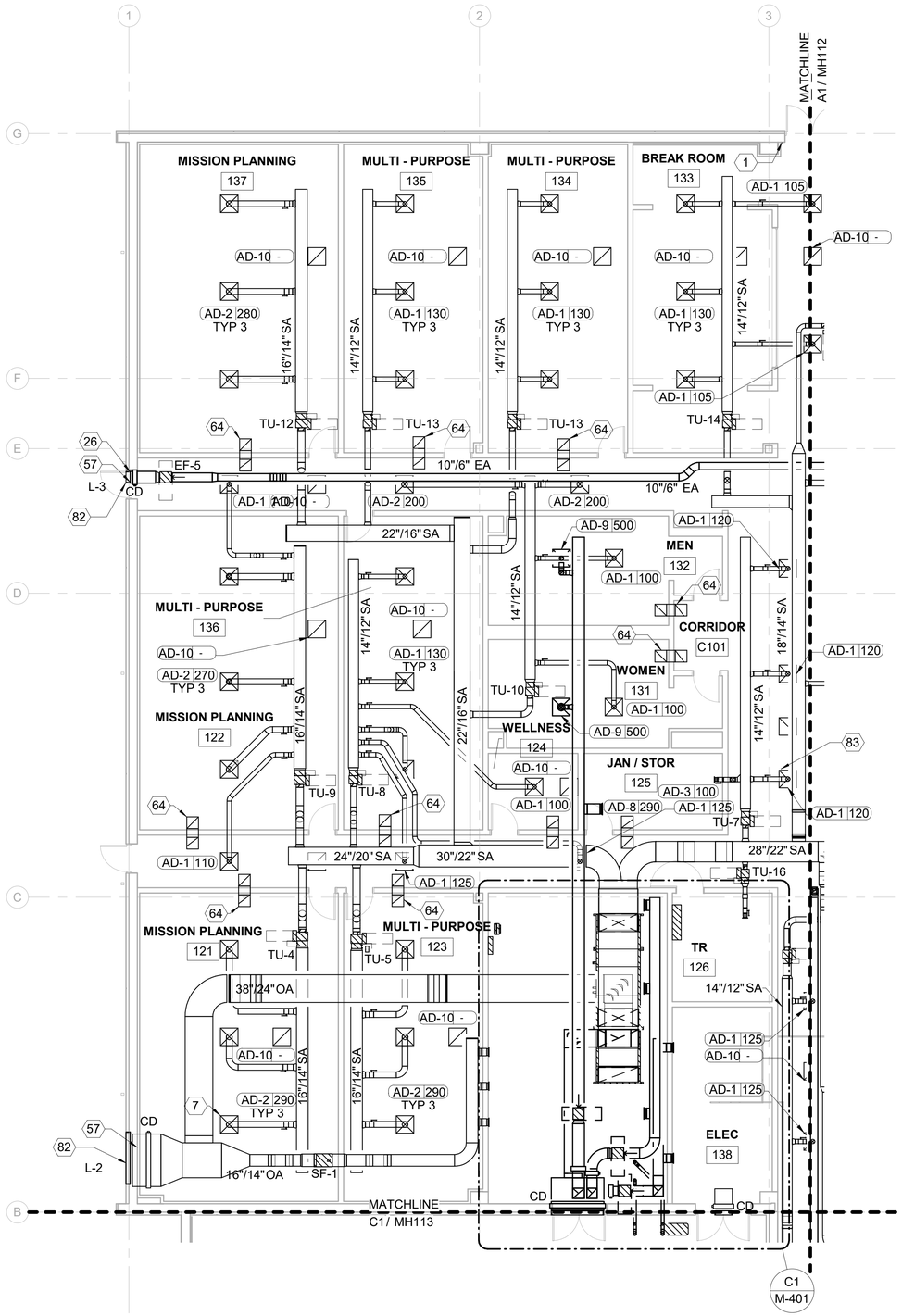

A1 HVAC PLAN - LEVEL 1 - AREA A

1/8" = 1'-0"

GENERAL NOTES

A	MAINTAIN MANUFACTURER'S RECOMMENDED CLEARANCES ON ALL EQUIPMENT.
B	PROVIDE CLEARANCES FOR ALL ELECTRICAL AND CONTROL PANELS PER NEC.
C	REFER TO PIPING PLANS FOR THERMOSTAT ASSIGNMENTS.
D	COORDINATE THERMOSTATS WITH FURNISHINGS. LOCATE THERMOSTATS 6" ON CENTER FROM LIGHT SWITCH. MOUNT TOP OF THERMOSTAT AS SHOWN AT ADA APPROVED MOUNTING HEIGHT.
E	PROVIDE U.L. RATED THROUGH PENETRATION FIRE STOP SYSTEMS AT ALL PENETRATIONS THROUGH RATED WALLS.
F	PROVIDE BALANCING DAMPER AT EACH TAKEOFF.
G	ALL MITERED ELBOWS HAVE TURNING VANES.
H	EQUIPMENT, DUCTWORK, AND PIPING SHALL BE BASED, SUPPORTED AND RESTRAINED TO MEET SEISMIC REQUIREMENTS.
I	REFER TO ARCH DRAWINGS FOR LOUVER SIZES
J	PROVIDE LOW LEAKAGE MOTORIZED ISOLATION DAMPERS AT WALL LOUVERS FOR EMERGENCY AIR DISTRIBUTION SHUTOFF.
K	PRIMARY DUCT INLET SIZE WILL MATCH BRANCH DUCT SIZE UNLESS OTHERWISE INDICATED.

KEYNOTES

1	PROVIDE HVAC SYSTEM REMOTE EMERGENCY SHUTDOWN SWITCH. ACTIVATION OF THE SWITCH WILL SHUT DOWN ALL EQUIPMENT THAT INTRODUCES OUTSIDE AIR INTO THE SPACE (AIR HANDLING UNIT, INTAKE LOUVERS, RESTROOM/GENERAL EXHAUST FANS). PROVIDE PUSH BUTTON TYPE SWITCH MOUNTED AT 48" AFF. THE SWITCH WILL BE CLEARLY LABELED "HVAC EMERGENCY SHUTDOWN SWITCH" AND WILL BE PROVIDED WITH A CLEAR LIFTING COVER."
7	PROVIDE INSULATED AIR INTAKE PLENUM ON BACK OF LOUVER. REFER TO ARCHITECTURE FOR LOUVER SCHEDULE, ELEVATION, AND DETAILS.
26	PROVIDE LOW-LEAK BACKDRAFT DAMPER.
57	DUCT CONNECTS TO LOUVER. REFER TO ARCHITECTURAL FOR LOUVER SCHEDULE, ELEVATION, AND DETAILS.
64	PROVIDE TRANSFER BOOT DUCT WITH 16/16 FREE AREA. REF: DETAIL E7 ON SHEET M-501.
82	RE: A-620 FOR LOUVER SCHEDULE
83	PROVIDE REMOTE CABLE OPERATED BALANCING DAMPER REGULATOR FOR AIR DEVICES LOCATED IN HARD CEILING. COORDINATE CUP AND LID LOCATION WITH ARCHITECTURAL CEILING PLAN. TYP.

KEY PLAN

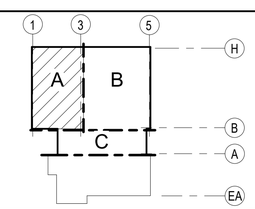

GRAPHIC SCALE

8 0 8 16

Scale: 1/8 INCH = 1 FOOT

PROJECT NORTH

PLAN NORTH

STATE OF TEXAS
BRANDEN M. SCHNEIDER
129852
LICENSED
PROFESSIONAL ENGINEER
6.24.2021

US Army Corps of Engineers ®

MARK	DESCRIPTION	DATE

ISSUE DATE: JUNE 2022
CONTRACT NO.: W912PP-22-R-0021

DESIGNED BY: B. SCHNEIDER
DRAWN BY: A. CLEAR
CHECKED BY: A. FORAN
SUBMITTED BY: E. OLNESS
SIZE: ANSI D
FILENAME: K489-951-MH111

US ARMY CORPS OF ENGINEERS
ALBUQUERQUE
ALBUQUERQUE, NEW MEXICO

JACOBS
JACOBS ENGINEERING GROUP INC.
777 Main Street
Fort Worth, TX 76102

COMBAT RESCUE HELICOPTER SIMULATOR FACILITY
KIRTLAND AIR FORCE BASE (AFB),
BERNALILLO COUNTY, NEW MEXICO

CRH SIMULATOR FACILITY ADAL
HVAC PLAN - LEVEL 1 - AREA A

SHEET ID
951B
MH111

READY TO ADVERTISE

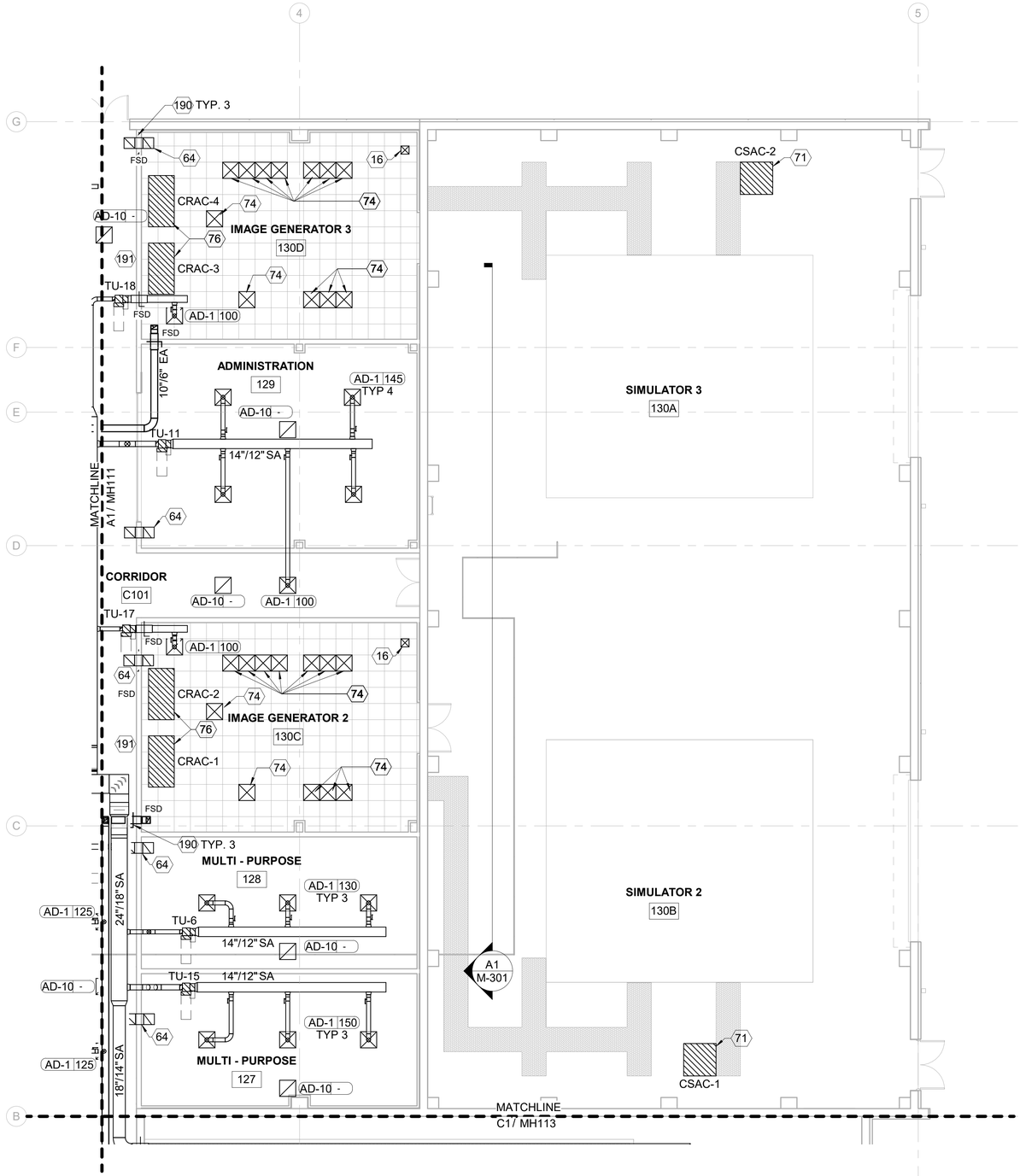

A1 HVAC PLAN - LEVEL 1 - AREA B

1/8" = 1'-0"

GENERAL NOTES

A	MAINTAIN MANUFACTURER'S RECOMMENDED CLEARANCES ON ALL EQUIPMENT.
B	PROVIDE CLEARANCES FOR ALL ELECTRICAL AND CONTROL PANELS PER NEC.
C	REFER TO PIPING PLANS FOR THERMOSTAT ASSIGNMENTS.
D	COORDINATE THERMOSTATS WITH FURNISHINGS. LOCATE THERMOSTATS 6" ON CENTER FROM LIGHT SWITCH. MOUNT TOP OF THERMOSTAT AS SHOWN AT ADA APPROVED MOUNTING HEIGHT.
E	PROVIDE U.L. RATED THROUGH PENETRATION FIRE STOP SYSTEMS AT ALL PENETRATIONS THROUGH RATED WALLS.
F	PROVIDE BALANCING DAMPER AT EACH TAKEOFF.
G	ALL MITERED ELBOWS HAVE TURNING VANES.
H	EQUIPMENT, DUCTWORK, AND PIPING SHALL BE BASED, SUPPORTED AND RESTRAINED TO MEET SEISMIC REQUIREMENTS.
I	REFER TO ARCH DRAWINGS FOR LOUVER SIZES
J	PROVIDE LOW LEAKAGE MOTORIZED ISOLATION DAMPERS AT WALL LOUVERS FOR EMERGENCY AIR DISTRIBUTION SHUTOFF.
K	PRIMARY DUCT INLET SIZE WILL MATCH BRANCH DUCT SIZE UNLESS OTHERWISE INDICATED.

KEYNOTES

16	MAKE-UP AIR DUCT ROUTED FROM BELOW FLOOR TO PLENUM SPACE. MAKE-UP AIR TO BE TRANSFERRED INTO PLENUM VIA TRANSFER BOOT.
64	PROVIDE TRANSFER BOOT DUCT WITH 16/16 FREE AREA. REF: DETAIL E7 ON SHEET M-501.
71	CSAC UNIT IS PROVIDED AND INSTALLED BY SIMULATOR MANUFACTURER.
74	PROVIDE PERFORATED DIFFUSER FLOOR TILES. PROVIDED MINIMUM 25% FREE AREA AND PROVIDE BALANCING DAMPERS. BOD: TATE DPERF 1250 OR APPROVED EQUIVALENT. LOCATION OF TILES TO BE COORDINATED WITH FINAL EQUIPMENT LOCATION.
76	RE: M-501 FOR DETAIL
190	120 V CIRCUIT SHALL BE PROVIDED TO FIRE SMOKE DAMPERS.
191	IMAGE GENERATOR ROOM EXHAUST FAN MANUAL ACTIVATION SWITCH TO BE PROVIDED. SWITCH TO BE LABELED "FIRE SUPPRESSION EXHAUST SYTEM - FIRE DEPARTMENT ONLY".

KEY PLAN

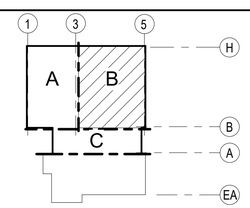

GRAPHIC SCALE

8 0 8 16

Scale: 1/8 INCH = 1 FOOT

PROJECT NORTH

PLAN NORTH

STATE OF TEXAS
BRANDEN M. SCHNEIDER
129852
LICENSED
PROFESSIONAL ENGINEER
6.24.2021

US Army Corps of Engineers ®

MARK	DESCRIPTION	DATE

ISSUE DATE: JUNE 2022
CONTRACT NO.: W912PP-22-R-0021

DESIGNED BY: B. SCHNEIDER
DRAWN BY: A. CLEAR
CHECKED BY: A. FORAN
SUBMITTED BY: E. OLNESS
SIZE: ANSI D
FILENAME: KG89-951-MH112

US ARMY CORPS OF ENGINEERS
ALBUQUERQUE
ALBUQUERQUE, NEW MEXICO

JACOBS
JACOBS ENGINEERING GROUP INC.
777 Main Street
Fort Worth, TX 76102

COMBAT RESCUE HELICOPTER SIMULATOR FACILITY
KIRTLAND AIR FORCE BASE (AFB),
BERNALILLO COUNTY, NEW MEXICO

CRH SIMULATOR FACILITY ADAL
HVAC PLAN - LEVEL 1 - AREA B

SHEET ID
951B
MH112

READY TO ADVERTISE

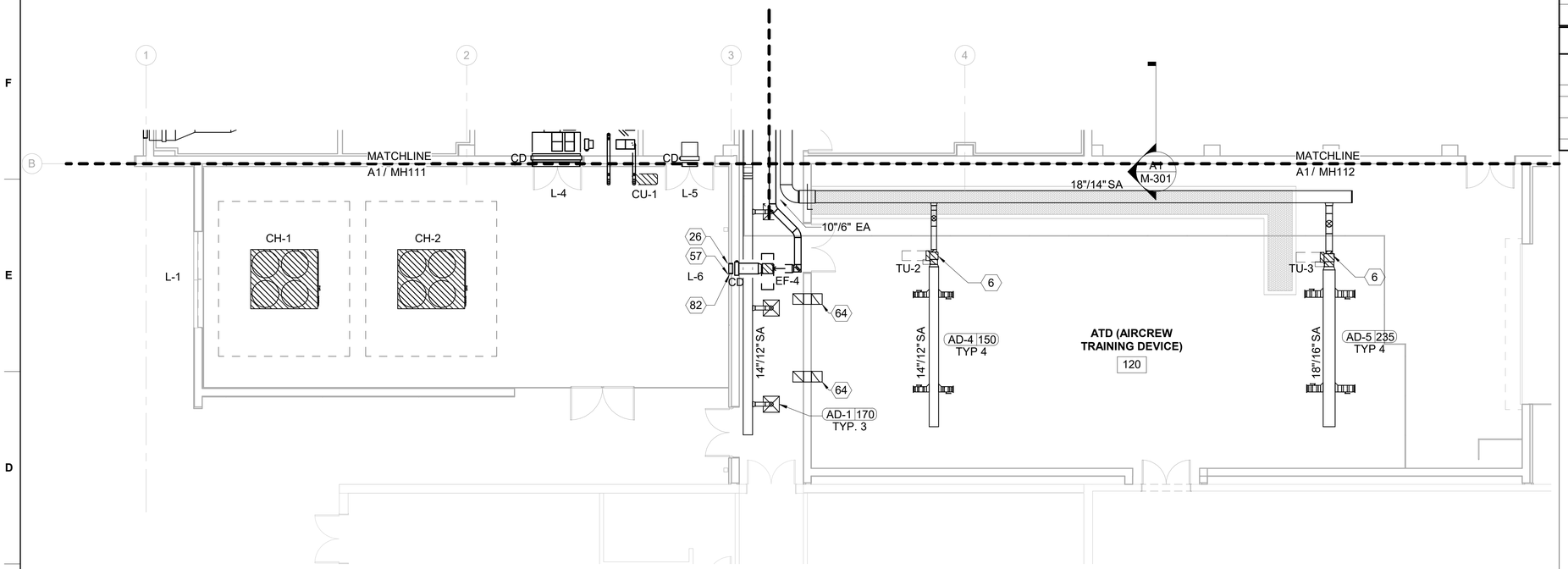

C1 HVAC PLAN - LEVEL 1 - AREA C

1/8" = 1'-0"

GENERAL NOTES

A	MAINTAIN MANUFACTURER'S RECOMMENDED CLEARANCES ON ALL EQUIPMENT.
B	PROVIDE CLEARANCES FOR ALL ELECTRICAL AND CONTROL PANELS PER NEC.
C	REFER TO PIPING PLANS FOR THERMOSTAT ASSIGNMENTS.
D	COORDINATE THERMOSTATS WITH FURNISHINGS. LOCATE THERMOSTATS 6" ON CENTER FROM LIGHT SWITCH. MOUNT TOP OF THERMOSTAT AS SHOWN AT ADA APPROVED MOUNTING HEIGHT.
E	PROVIDE U.L. RATED THROUGH PENETRATION FIRE STOP SYSTEMS AT ALL PENETRATIONS THROUGH RATED WALLS.
F	PROVIDE BALANCING DAMPER AT EACH TAKEOFF.
G	ALL MITERED ELBOWS HAVE TURNING VANES.
H	EQUIPMENT, DUCTWORK, AND PIPING SHALL BE BASED, SUPPORTED AND RESTRAINED TO MEET SEISMIC REQUIREMENTS.
I	REFER TO ARCH DRAWINGS FOR LOUVER SIZES
J	PROVIDE LOW LEAKAGE MOTORIZED ISOLATION DAMPERS AT WALL LOUVERS FOR EMERGENCY AIR DISTRIBUTION SHUTOFF.
K	PRIMARY DUCT INLET SIZE WILL MATCH BRANCH DUCT SIZE UNLESS OTHERWISE INDICATED.

KEYNOTES

6	TU'S TO BE MOUNTED AS CLOSE TO THE CEILING AS POSSIBLE AND COORDINATED WITH OTHER TRADES TO ASSURE ACCESS TO CONTROLS. TYPICAL.
26	PROVIDE LOW-LEAK BACKDRAFT DAMPER.
57	DUCT CONNECTS TO LOUVER. REFER TO ARCHITECTURAL FOR LOUVER SCHEDULE, ELEVATION, AND DETAILS.
64	PROVIDE TRANSFER BOOT DUCT WITH 16/16 FREE AREA. REF: DETAIL E7 ON SHEET M-501.
82	RE: A-620 FOR LOUVER SCHEDULE

KEY PLAN

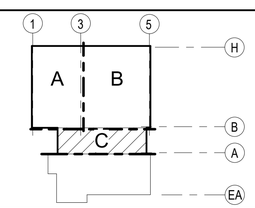

GRAPHIC SCALE

8 0 8 16

Scale: 1/8 INCH = 1 FOOT

PROJECT NORTH

PLAN NORTH

STATE OF TEXAS
BRANDEN M. SCHNEIDER
129852
LICENSED
PROFESSIONAL ENGINEER
6.24.2021

US Army Corps of Engineers ®

MARK	DESCRIPTION	DATE

DESIGNED BY: B. SCHNEIDER
DRAWN BY: A. CLEAR
CHECKED BY: A. FORAN
SUBMITTED BY: E. OLMESS
SIZE: ANSI D
ISSUE DATE: JUNE 2022
CONTRACT NO.: W912PP-22-R-0021
FILENAME: KA86951-MH113

US ARMY CORPS OF ENGINEERS
ALBUQUERQUE
ALBUQUERQUE, NEW MEXICO

JACOBS
JACOBS ENGINEERING GROUP INC.
777 Main Street
Fort Worth, TX 76102

COMBAT RESCUE HELICOPTER SIMULATOR FACILITY
KIRTLAND AIR FORCE BASE (AFB)
BERNALILLO COUNTY, NEW MEXICO

CRH SIMULATOR FACILITY ADAL
HVAC PLAN - LEVEL 1 - AREA C

SHEET ID
951B
MH113

READY TO ADVERTISE

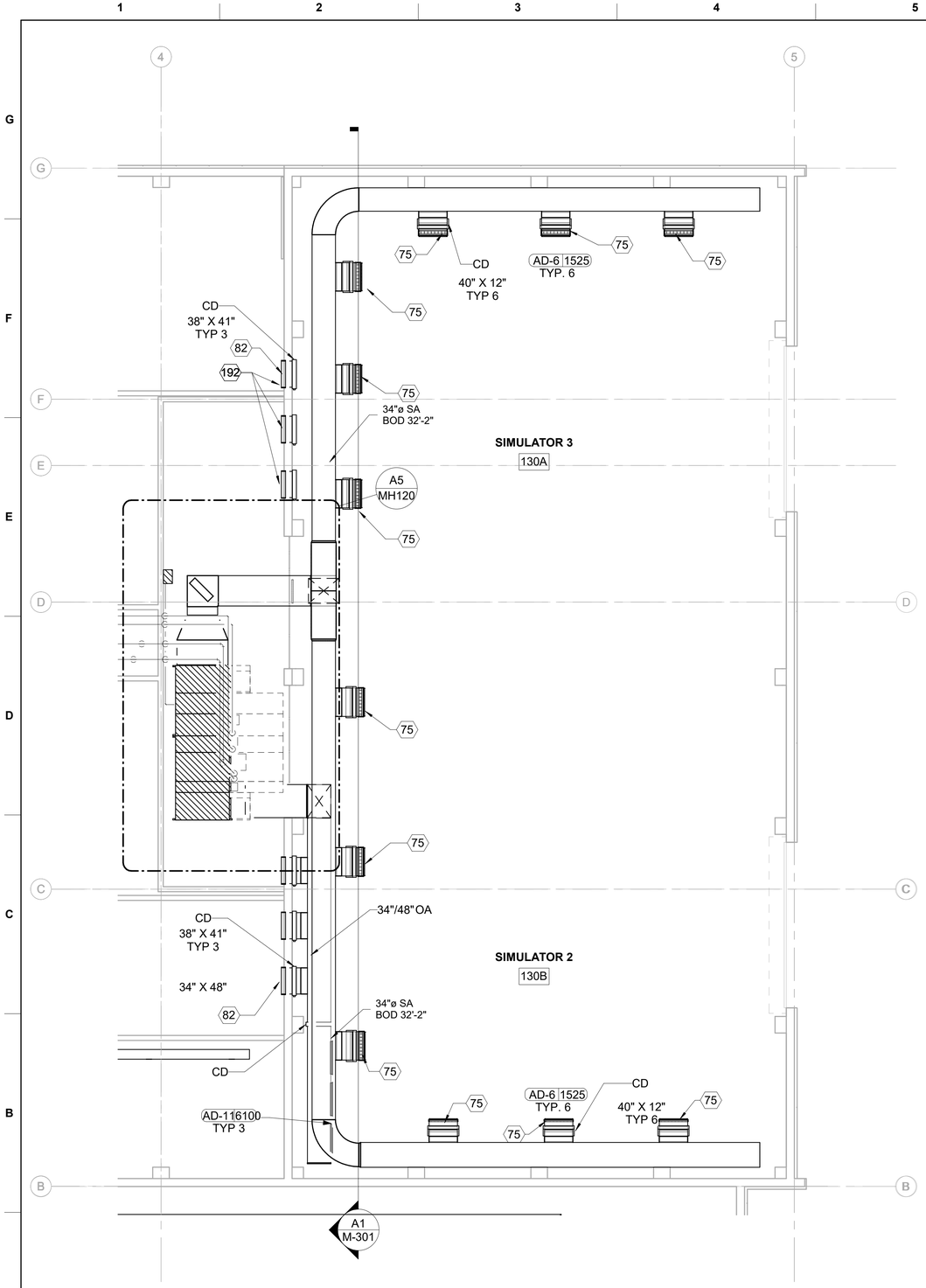

A1 HVAC & PIPING PLAN - MEZZANINE

1/8" = 1'-0"

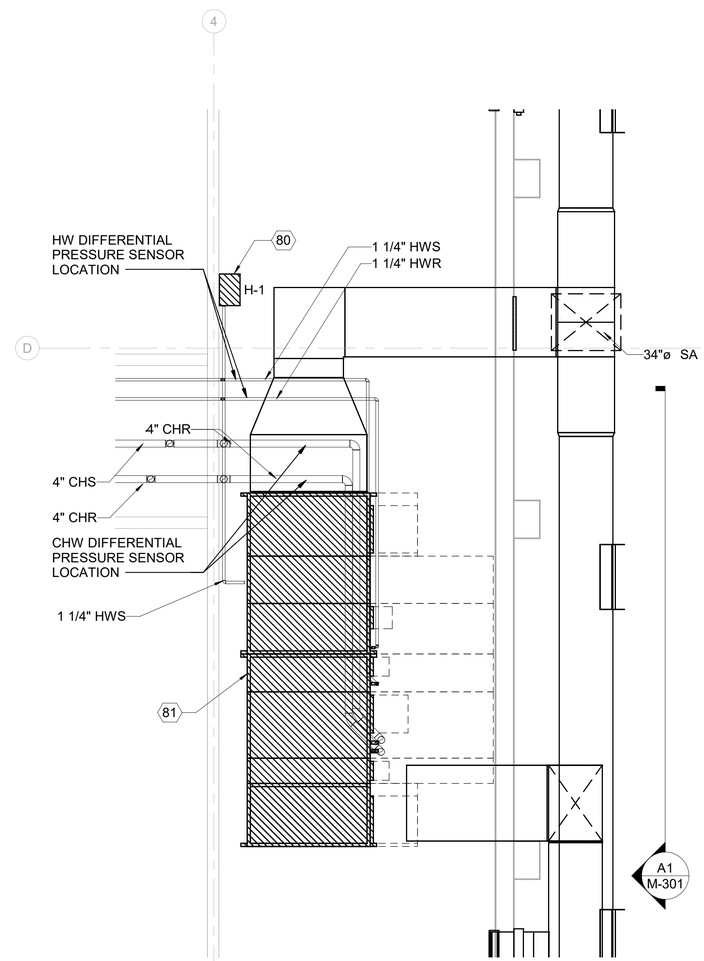

A5 ENLARGED HVAC & PIPING PLAN - MEZZANINE

SCALE 1/4" = 1'-0"

GENERAL NOTES

A	MAINTAIN MANUFACTURER'S RECOMMENDED CLEARANCES ON ALL EQUIPMENT.
B	PROVIDE CLEARANCES FOR ALL ELECTRICAL AND CONTROL PANELS PER NEC.
C	REFER TO PIPING PLANS FOR THERMOSTAT ASSIGNMENTS.
D	COORDINATE THERMOSTATS WITH FURNISHINGS. LOCATE THERMOSTATS 6" ON CENTER FROM LIGHT SWITCH. MOUNT TOP OF THERMOSTAT AS SHOWN AT ADA APPROVED MOUNTING HEIGHT.
E	PROVIDE U.L. RATED THROUGH PENETRATION FIRE STOP SYSTEMS AT ALL PENETRATIONS THROUGH RATED WALLS.
F	PROVIDE BALANCING DAMPER AT EACH TAKEOFF.
G	ALL MITERED ELBOWS HAVE TURNING VANES.
H	EQUIPMENT, DUCTWORK, AND PIPING SHALL BE BASED, SUPPORTED AND RESTRAINED TO MEET SEISMIC REQUIREMENTS.
I	REFER TO ARCH DRAWINGS FOR LOUVER SIZES
J	PROVIDE LOW LEAKAGE MOTORIZED ISOLATION DAMPERS AT WALL LOUVERS FOR EMERGENCY AIR DISTRIBUTION SHUTOFF.
K	PRIMARY DUCT INLET SIZE WILL MATCH BRANCH DUCT SIZE UNLESS OTHERWISE INDICATED.

KEYNOTES

75	ROTATE DRUM DIFFUSER 55 DEGREES TOWARDS FLOOR.
80	RE: M-515 FOR DETAIL
81	RE: M-506 FOR DETAIL
82	RE: A-620 FOR LOUVER SCHEDULE
192	PROVIDE GRAVITY RELIEF DAMPERS BALANCED FOR 6100 CFM AND MOTORIZED SHUTOFF DAMPERS

KEY PLAN

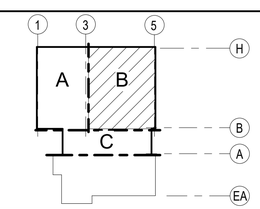

GRAPHIC SCALE

8 0 8 16

Scale: 1/8 INCH = 1 FOOT

PROJECT NORTH

PLAN NORTH

STATE OF TEXAS
BRANDEN M. SCHNEIDER
129852
LICENSED
PROFESSIONAL ENGINEER
6.24.2021

US Army Corps of Engineers ®

MARK	DESCRIPTION	DATE

ISSUE DATE: JUNE 2022
CONTRACT NO.: W912PP-22-R-0021

DESIGNED BY: B. SCHNEIDER
DRAWN BY: A. CLEAR
CHECKED BY: A. FORAN
SUBMITTED BY: E. OLNESS
SIZE: ANSI D
FILENAME: K489-951-MH120

US ARMY CORPS OF ENGINEERS
ALBUQUERQUE
ALBUQUERQUE, NEW MEXICO

JACOBS
JACOBS ENGINEERING GROUP INC.
777 Main Street
Fort Worth, TX 76102

COMBAT RESCUE HELICOPTER SIMULATOR FACILITY
KIRTLAND AIR FORCE BASE (AFB),
BERNALILLO COUNTY, NEW MEXICO

CRH SIMULATOR FACILITY ADAL

HVAC & PIPING PLAN - MEZZANINE

SHEET ID
951B
MH120

READY TO ADVERTISE

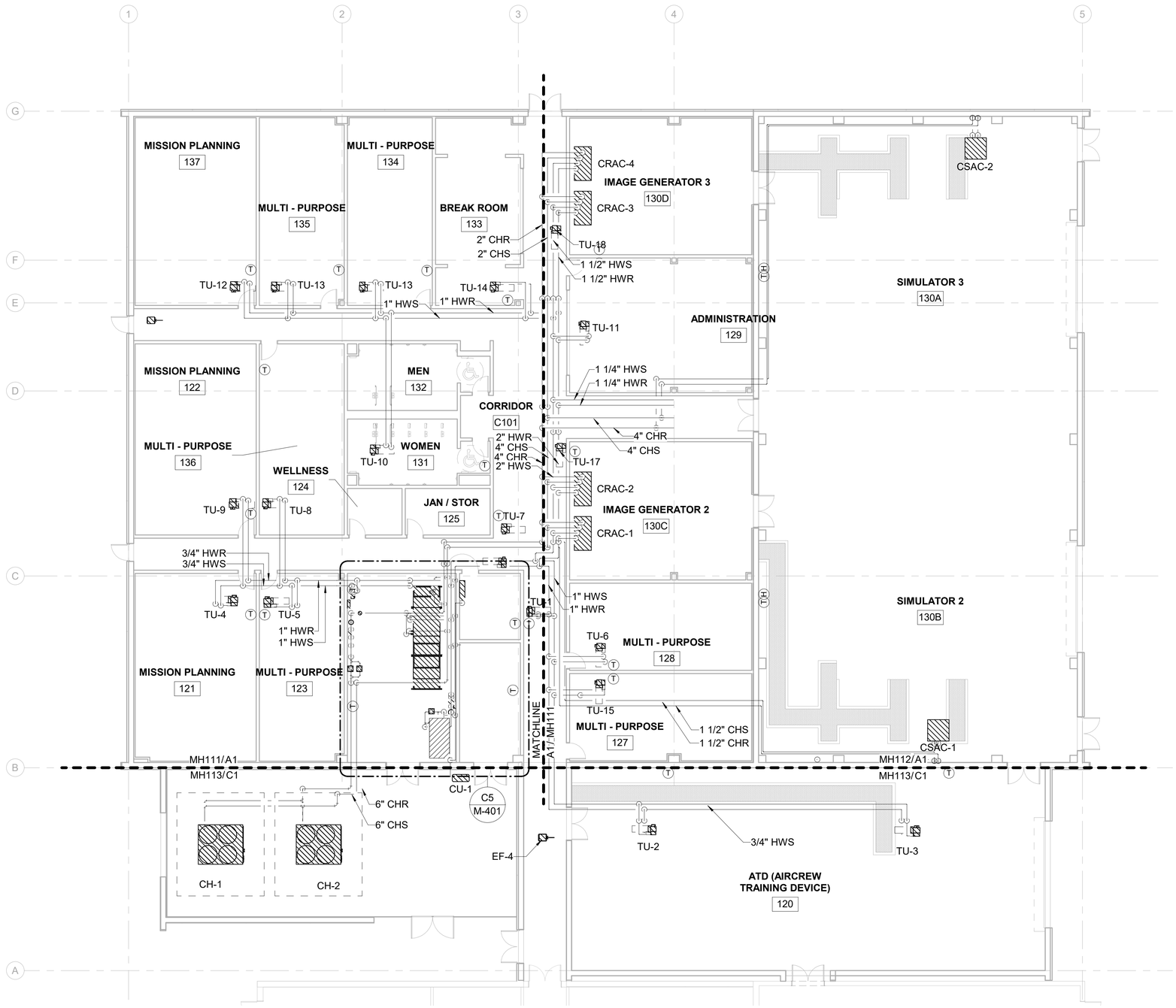

A1 HVAC PIPING PLAN - LEVEL 1 - OVERALL

3/32" = 1'-0"

GENERAL NOTES

A	MAINTAIN MANUFACTURER'S RECOMMENDED CLEARANCES ON ALL EQUIPMENT.
B	PROVIDE CLEARANCES FOR ALL ELECTRICAL AND CONTROL PANELS PER NEC.
C	ROUTE PIPING TIGHT TO OVERHEAD STRUCTURE. DO NOT ROUTE PIPING ABOVE ELECTRICAL EQUIPMENT.

US Army Corps of Engineers ®

MARK	DESCRIPTION	DATE

DESIGNED BY: B. SCHNEIDER
DRAWN BY: A. CLEAR
CHECKED BY: A. FORAN
SUBMITTED BY: E. OLMESS
ANSI D

ISSUE DATE: JUNE 2022
CONTRACT NO.: W912PP-22-R-0021
FILENAME: KAB9951-MP110

US ARMY CORPS OF ENGINEERS
ALBUQUERQUE
ALBUQUERQUE, NEW MEXICO

JACOBS
JACOBS ENGINEERING GROUP INC.
777 Main Street
FORT WORTH, TX 76102

COMBAT RESCUE HELICOPTER SIMULATOR FACILITY
KIRTLAND AIR FORCE BASE (AFB),
BERNALILLO COUNTY, NEW MEXICO

CRH SIMULATOR FACILITY ADAL

HVAC PIPING PLAN - LEVEL 1 - OVERALL

SHEET ID
951B
MP110

KEY PLAN

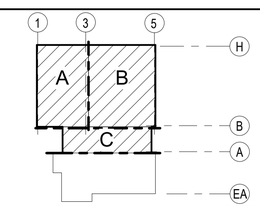

GRAPHIC SCALE

8 0 8 16 24

Scale: 3/32 INCH = 1 FOOT

PROJECT NORTH

PLAN NORTH

STATE OF TEXAS
BRANDEN M. SCHNEIDER
129852
LICENSED
PROFESSIONAL ENGINEER
6.24.2021

READY TO ADVERTISE

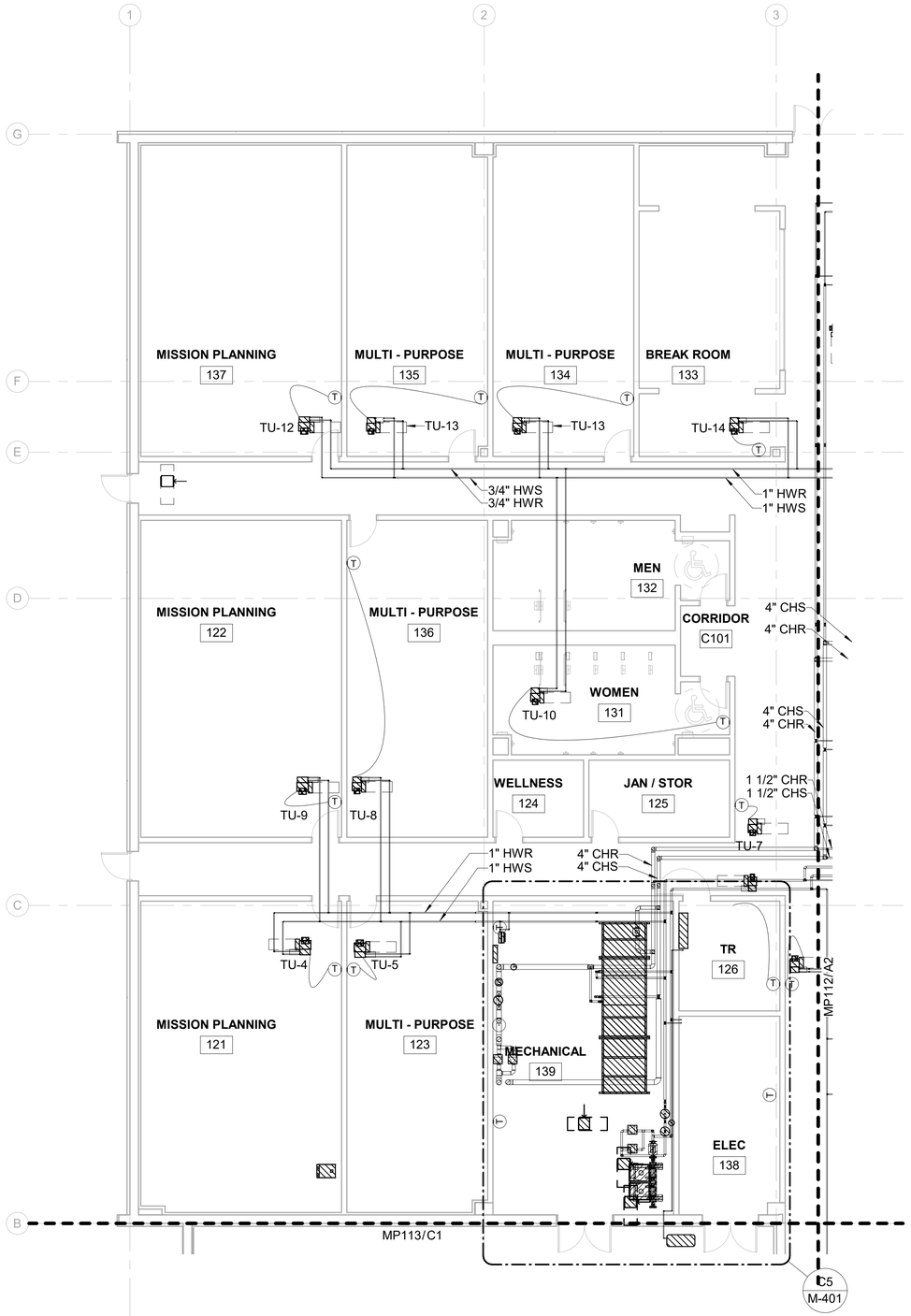

A1 HVAC PIPING PLAN - LEVEL 1 - AREA A

1/8" = 1'-0"

GENERAL NOTES

A	MAINTAIN MANUFACTURER'S RECOMMENDED CLEARANCES ON ALL EQUIPMENT.
B	PROVIDE CLEARANCES FOR ALL ELECTRICAL AND CONTROL PANELS PER NEC.
C	ROUTE PIPING TIGHT TO OVERHEAD STRUCTURE. DO NOT ROUTE PIPING ABOVE ELECTRICAL EQUIPMENT.

KEY PLAN

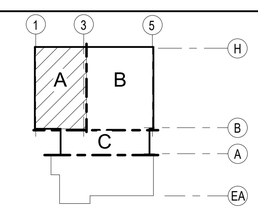

GRAPHIC SCALE

8 0 8 16

Scale: 1/8 INCH = 1 FOOT

PROJECT NORTH

PLAN NORTH

STATE OF TEXAS
BRANDEN M. SCHNEIDER
129852
LICENSED
PROFESSIONAL ENGINEER
6.24.2021

US Army Corps of Engineers ®

MARK	DESCRIPTION	DATE

DESIGNED BY: B. SCHNEIDER
DRAWN BY: A. CLEAR
CHECKED BY: A. FORAN
SUBMITTED BY: E. OLMESS
SIZE: ANSI D
ISSUE DATE: JUNE 2022
CONTRACT NO.: W912PP-22-R-0021
FILENAME: K486951-MP111

US ARMY CORPS OF ENGINEERS
ALBUQUERQUE
ALBUQUERQUE, NEW MEXICO

JACOBS
JACOBS ENGINEERING GROUP INC.
777 Main Street
Fort Worth, TX 76102

COMBAT RESCUE HELICOPTER SIMULATOR FACILITY
KIRTLAND AIR FORCE BASE (AFB),
BERNALILLO COUNTY, NEW MEXICO

CRH SIMULATOR FACILITY ADAL

HVAC PIPING PLAN - LEVEL 1 - AREA A

SHEET ID
951B
MP111

READY TO ADVERTISE

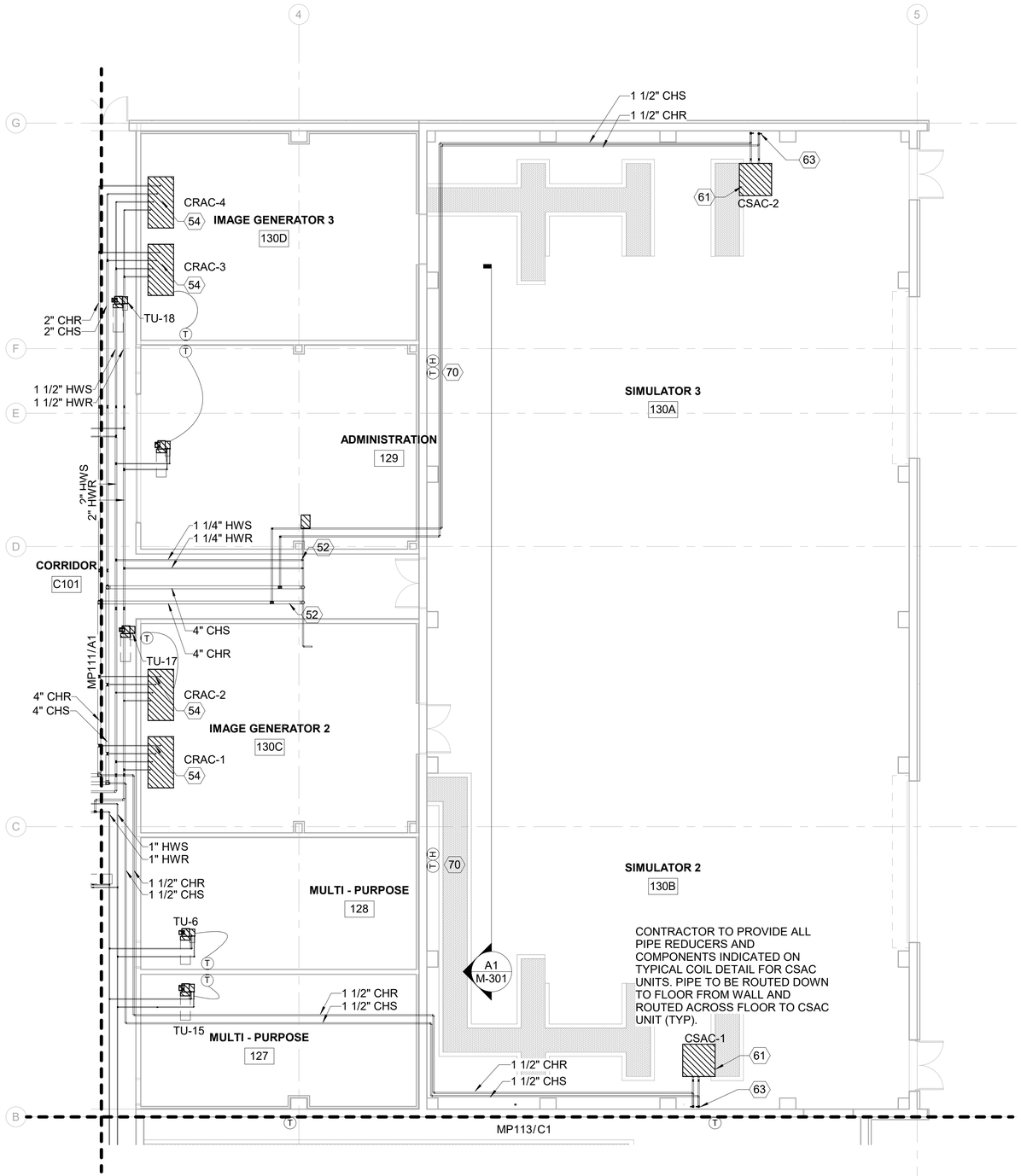

A2 HVAC PIPING PLAN - LEVEL 1 - AREA B

1/8" = 1'-0"

GENERAL NOTES

A	MAINTAIN MANUFACTURER'S RECOMMENDED CLEARANCES ON ALL EQUIPMENT.
B	PROVIDE CLEARANCES FOR ALL ELECTRICAL AND CONTROL PANELS PER NEC.
C	ROUTE PIPING TIGHT TO OVERHEAD STRUCTURE. DO NOT ROUTE PIPING ABOVE ELECTRICAL EQUIPMENT.

KEYNOTES

52	CHS, CHR, HWS & HWR CONTINUES THROUGH WALL TO MEZZANINE LEVEL. REFER TO A1/MH120 FOR CONTINUATION.
54	CHS, CHR, HWS & HWR DOWN TO CRAC UNIT. TYPICAL.
61	PROVIDE TEMPERATURE GAUGE FOR CHS AND CHR PIPING TO CSAC UNITS.
63	CONTRACTOR TO PROVIDE ISOLATION VALVES FOR CSAC UNITS.
70	THERMOSTATS TO BE WIRED TO AHU-2 LOCATED ON MEZZANINE.

KEY PLAN

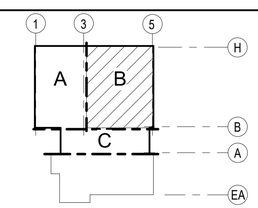

GRAPHIC SCALE

8 0 8 16

Scale: 1/8 INCH = 1 FOOT

PROJECT NORTH

PLAN NORTH

STATE OF TEXAS
BRANDEN M. SCHNEIDER
129852
LICENSED
PROFESSIONAL ENGINEER
6.24.2021

US Army Corps of Engineers ®

MARK	DESCRIPTION	DATE

DESIGNED BY: B. SCHNEIDER
DRAWN BY: A. CLEAR
CHECKED BY: A. FORAN
SUBMITTED BY: E. OLMESS
SIZE: ANSI D
ISSUE DATE: JUNE 2022
CONTRACT NO.: W912PP-22-R-0021
FILENAME: K486-951-MP113

US ARMY CORPS OF ENGINEERS
ALBUQUERQUE
ALBUQUERQUE, NEW MEXICO

JACOBS
JACOBS ENGINEERING GROUP INC.
777 Main Street
Fort Worth, TX 76102

COMBAT RESCUE HELICOPTER SIMULATOR FACILITY
KIRTLAND AIR FORCE BASE (AFB),
BERNALILLO COUNTY, NEW MEXICO
CRH SIMULATOR FACILITY ADAL
HVAC PIPING PLAN - LEVEL 1 - AREA B

SHEET ID
951B
MP112

READY TO ADVERTISE

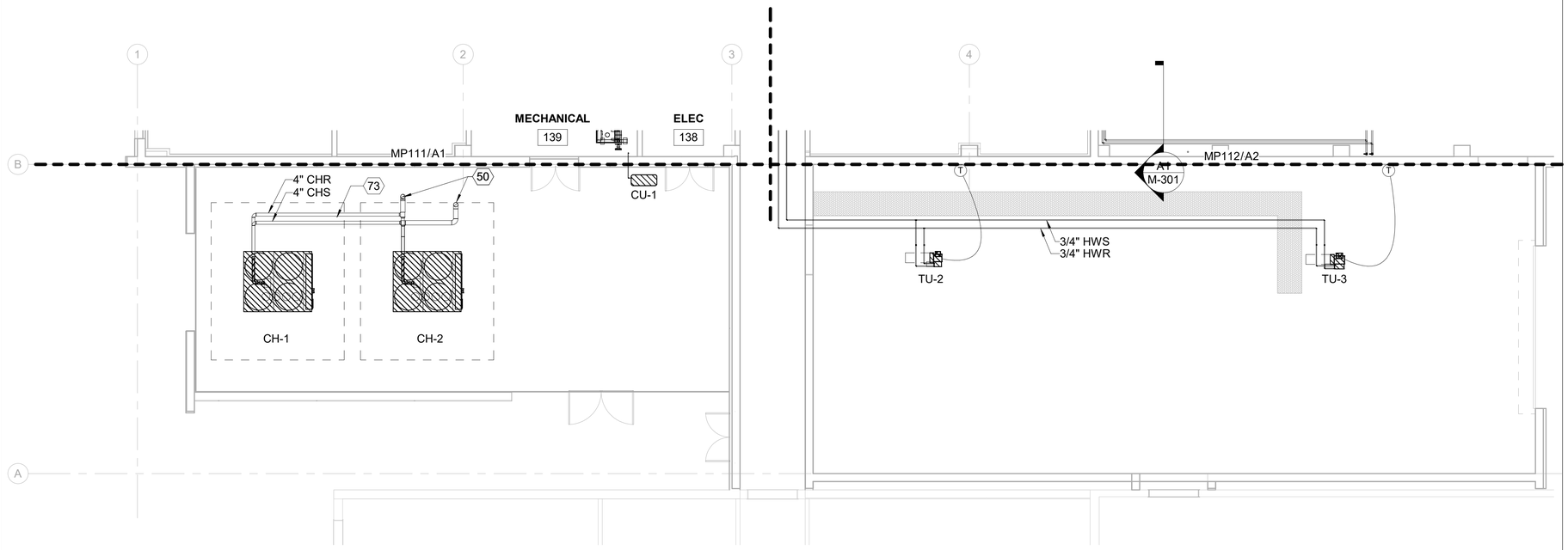

C1 HVAC PIPING PLAN - LEVEL 1 - AREA C

1/8" = 1'-0"

GENERAL NOTES

A	MAINTAIN MANUFACTURER'S RECOMMENDED CLEARANCES ON ALL EQUIPMENT.
B	PROVIDE CLEARANCES FOR ALL ELECTRICAL AND CONTROL PANELS PER NEC.
C	ROUTE PIPING TIGHT TO OVERHEAD STRUCTURE. DO NOT ROUTE PIPING ABOVE ELECTRICAL EQUIPMENT.

KEYNOTES

50	4" CHS/CHR UNDERGROUND BELOW FINISHED GRADE OF MECHANICAL YARD. COORDINATE WITH INCOMING DOMESTIC WATER AND GAS LINES.
73	RE: DETAIL A7/M-502 FOR TYPICAL MECHANICAL YARD PIPE SUPPORT DETAIL.

KEY PLAN

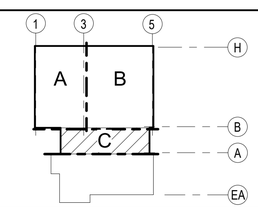

GRAPHIC SCALE

8 0 8 16

Scale: 1/8 INCH = 1 FOOT

PROJECT NORTH

PLAN NORTH

STATE OF TEXAS
BRANDEN M. SCHNEIDER
129852
LICENSED
PROFESSIONAL ENGINEER
6.24.2021

US Army Corps of Engineers ®

MARK	DESCRIPTION	DATE

DESIGNED BY: B. SCHNEIDER
DRAWN BY: A. CLEAR
CHECKED BY: A. FORAN
SUBMITTED BY: E. OLMESS
SIZE: ANSI D
ISSUE DATE: JUNE 2022
CONTRACT NO.: W912PP-22-R-0021
FILENAME: K486-951-MP113

US ARMY CORPS OF ENGINEERS
ALBUQUERQUE
ALBUQUERQUE, NEW MEXICO

JACOBS
JACOBS ENGINEERING GROUP INC.
777 Main Street
Fort Worth, TX 76102

COMBAT RESCUE HELICOPTER SIMULATOR FACILITY
KIRTLAND AIR FORCE BASE (AFB)
BERNALILLO COUNTY, NEW MEXICO

CRH SIMULATOR FACILITY ADAL

HVAC PIPING PLAN - LEVEL 1 - AREA C

SHEET ID
951B
MP113

READY TO ADVERTISE

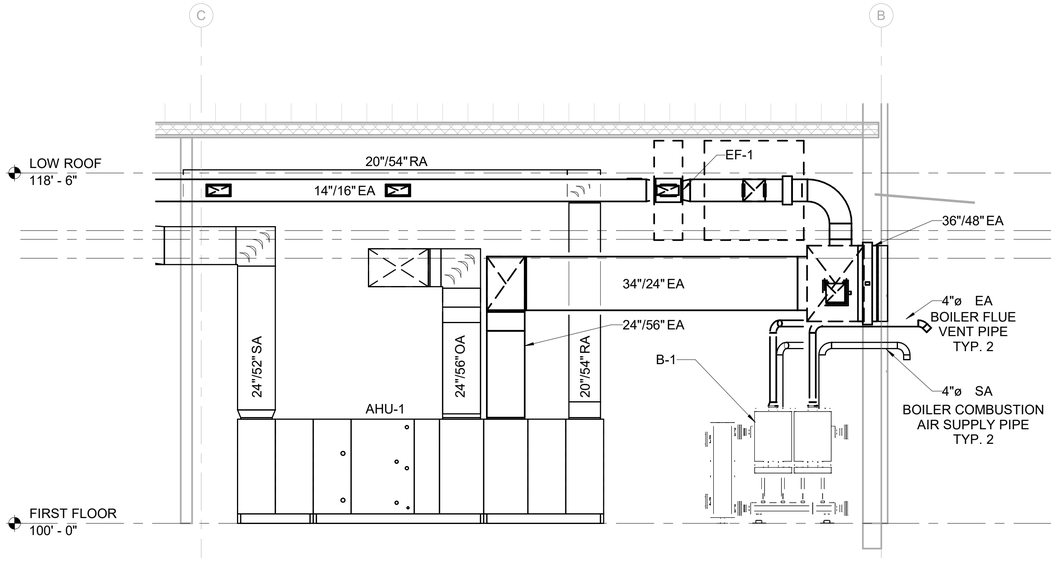

D1 MECHANICAL ROOM SECTION

SCALE 1/4" = 1'-0"

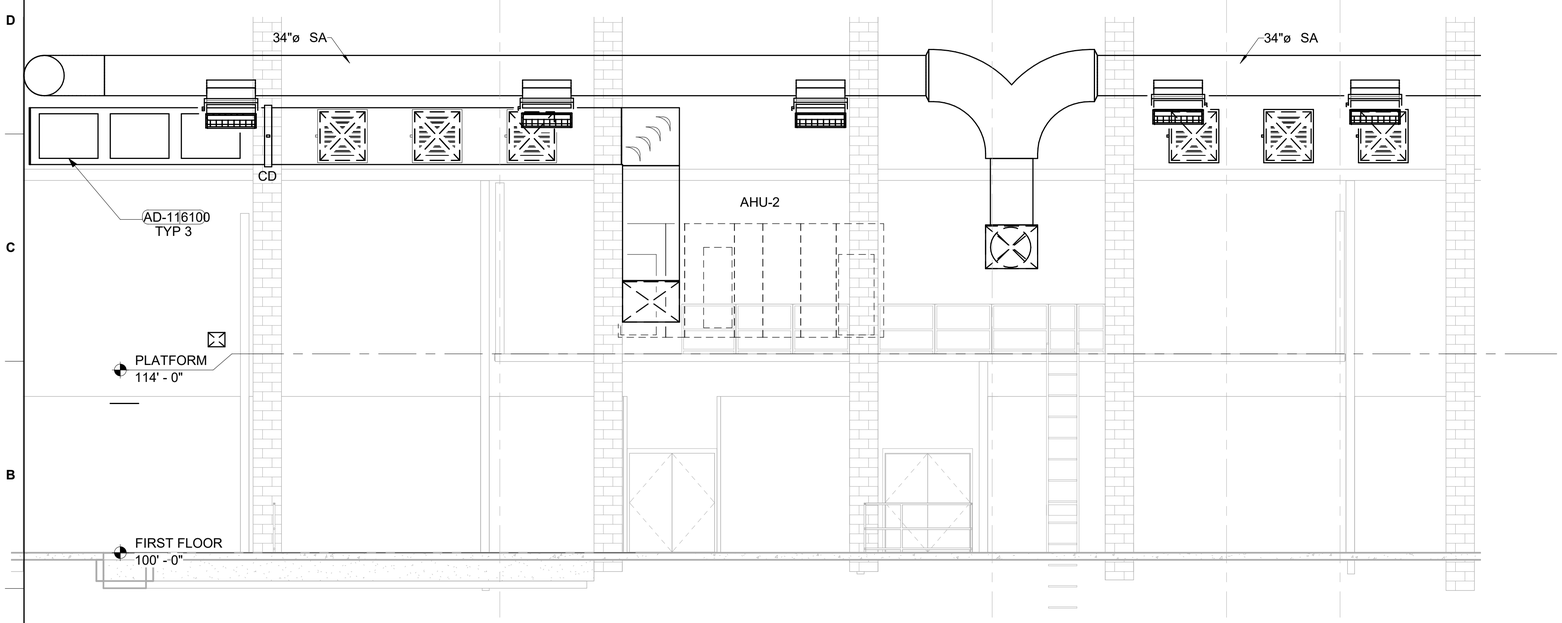

A1 SIMULATOR BAY SECTION

SCALE 3/16" = 1'-0"

US Army Corps of Engineers ®

MARK	DESCRIPTION	DATE

DESIGNED BY: B. SCHNEIDER
DRAWN BY: A. CLEAR
CHECKED BY: A. FORAN
SUBMITTED BY: E. OLNESS
SIZE: ANSI D
FILENAME:

ISSUE DATE: JUNE 2022
CONTRACT NO.: W912PP-22-R-0021

US ARMY CORPS OF ENGINEERS
ALBUQUERQUE
ALBUQUERQUE, NEW MEXICO

JACOBS
JACOBS ENGINEERING GROUP INC.
777 Main Street
Fort Worth, Texas 76102

COMBAT RESCUE HELICOPTER SIMULATOR FACILITY
KIRTLAND AIR FORCE BASE (AFB)
BERNALILLO COUNTY, NEW MEXICO

CRH SIMULATOR FACILITY ADAL
SECTIONS

STATE OF TEXAS
BRANDEN M. SCHNEIDER
129852
LICENSED
PROFESSIONAL ENGINEER
6.24.2021

SHEET ID
951B
M-301

READY TO ADVERTISE

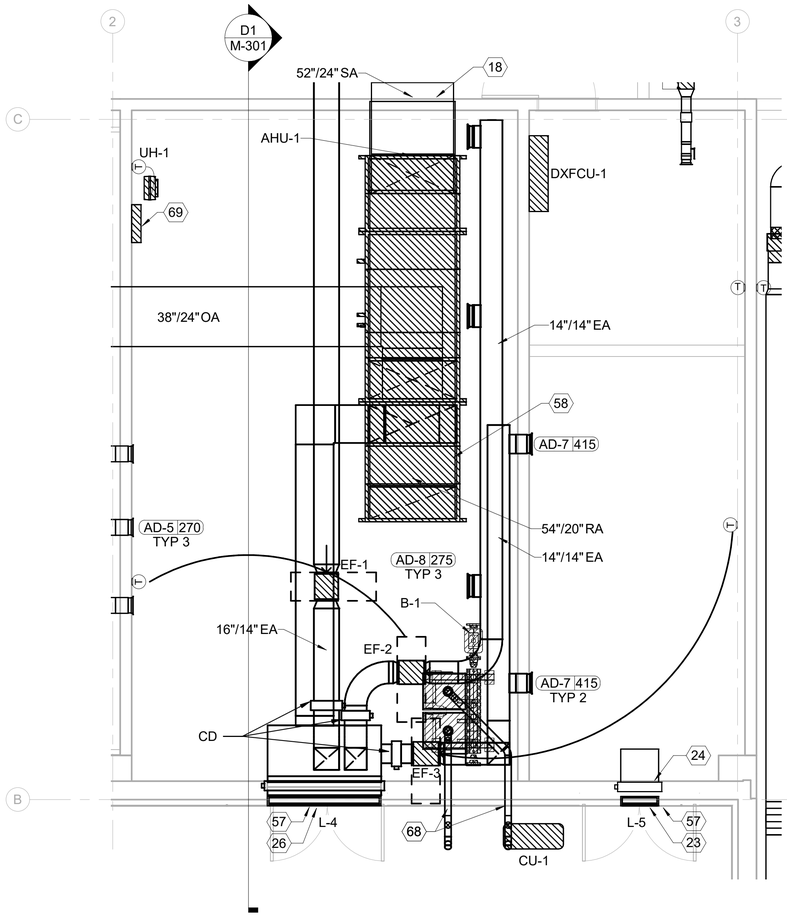

C1 HVAC PLAN - LEVEL 1 - MECH ROOM

1/4" = 1'-0"

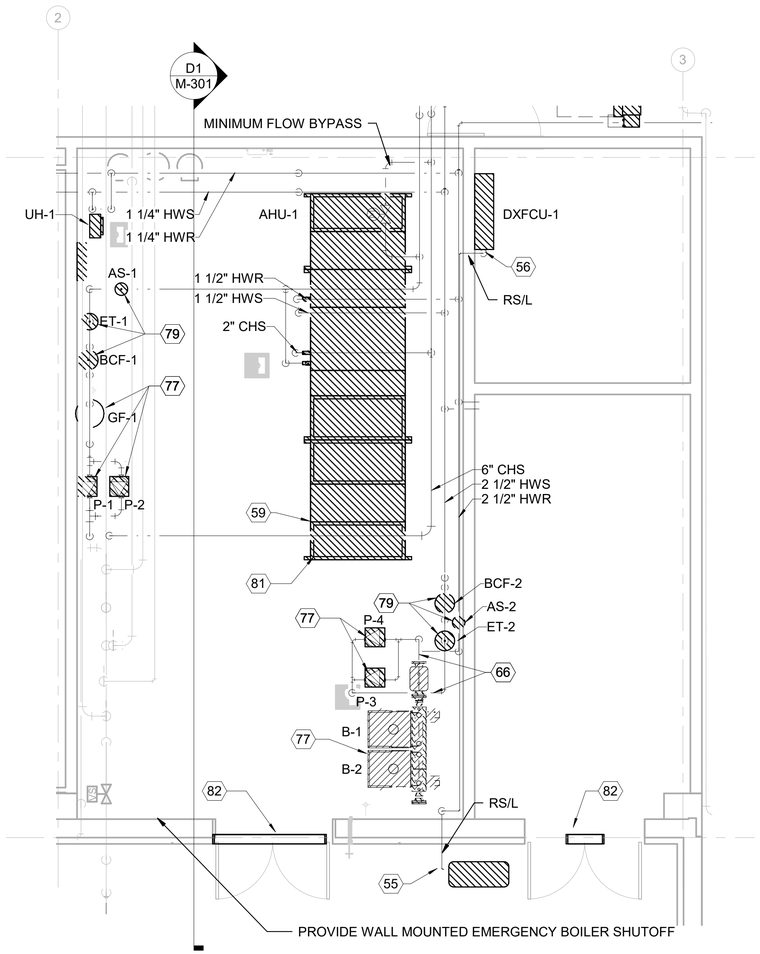

C5 PIPING PLAN - LEVEL 1 - MECH ROOM

1/4" = 1'-0"

GENERAL NOTES

A	MAINTAIN MANUFACTURER'S RECOMMENDED CLEARANCES ON ALL EQUIPMENT.
B	PROVIDE CLEARANCES FOR ALL ELECTRICAL AND CONTROL PANELS PER NEC.
C	REFER TO PIPING PLANS FOR THERMOSTAT ASSIGNMENTS.
D	COORDINATE THERMOSTATS WITH FURNISHINGS. LOCATE THERMOSTATS 6" ON CENTER FROM LIGHT SWITCH. MOUNT TOP OF THERMOSTAT AS SHOWN AT ADA APPROVED MOUNTING HEIGHT.
E	PROVIDE U.L. RATED THROUGH PENETRATION FIRE STOP SYSTEMS AT ALL PENETRATIONS THROUGH RATED WALLS.
F	PROVIDE BALANCING DAMPER AT EACH TAKEOFF.
G	ALL MITERED ELBOWS HAVE TURNING VANES.
H	EQUIPMENT, DUCTWORK, AND PIPING SHALL BE BASED, SUPPORTED AND RESTRAINED TO MEET SEISMIC REQUIREMENTS.
I	REFER TO ARCH DRAWINGS FOR LOUVER SIZES
J	PROVIDE LOW LEAKAGE MOTORIZED ISOLATION DAMPERS AT WALL LOUVERS FOR EMERGENCY AIR DISTRIBUTION SHUTOFF.
K	PRIMARY DUCT INLET SIZE WILL MATCH BRANCH DUCT SIZE UNLESS OTHERWISE INDICATED.

KEYNOTES

18	54/20 RA DUCT. COVER OPENING WITH 1/2" WIRE MESH IN REMOVABLE FRAME.
23	PROVIDE MOTORIZED LOW-LEAK ISOLATION DAMPER.
24	MOTORIZED LOUVER ABOVE DOOR INTERLOCKED WITH EF-3. REFER TO ARCHITECTURE FOR LOUVER SCHEDULE, ELEVATION, AND DETAILS.
26	PROVIDE LOW-LEAK BACKDRAFT DAMPER.
55	ROUTE WHIP AND REFRIGERANT LIQUID AND REFRIGERANT GAS LINES FROM OUTDOOR CONDENSING UNIT TO INDOOR DXFCU PER MANUFACTURER INSTRUCTIONS. REFRIGERANT PIPE ROUTING IS SHOWN FOR DIAGRAMMATIC PURPOSES ONLY. IT IS THE CONTRACTOR'S RESPONSIBILITY TO VERIFY THE EQUIPMENT LAYOUT AND PIPING WITH THE SELECTED EQUIPMENT MANUFACTURER AND TO COORDINATE THE ROUTING OF THE PIPING AND EQUIPMENT WITH OTHER TRADES.
56	MINI SPLIT SYSTEM MOUNTED 7'6" AFF. ROUTE WHIP AND REFRIGERANT LINES TO CONDENSING UNIT ON EXTERIOR OF BUILDING.
57	DUCT CONNECTS TO LOUVER. REFER TO ARCHITECTURAL FOR LOUVER SCHEDULE, ELEVATION, AND DETAILS.
58	RETURN AIR DUCT ROUTED ABOVE EXHAUST DUCT AND OUTSIDE AIR DUCT TO PENETRATION OF NORTH MECHANICAL ROOM WALL. BOTTOM OF RETURN DUCT 17'-0" AFF.
59	PROVIDE 5 FT EQUIPMENT CLEARANCE IN FRONT OF AHU-1.
66	PROVIDE BRAIDED HOSE EXPANSION JOINT.
68	BOILER FLUE ROUTED ABOVE BOILER AIR INTAKE. TERMINATE BOILER AND FLUE AND INTAKE DUCTWORK AT EXTERIOR WALL. DUCTWORK TO BE INSTALLED AND SUPPORTED PER MANUFACTURER'S REQUIREMENTS.
69	BUILDING AUTOMATION SYSTEM (BAS) CONTROL PANEL.
77	RE: M-502 FOR DETAIL
79	RE: M-504 FOR DETAIL
81	RE: M-506 FOR DETAIL
82	RE: A-620 FOR LOUVER SCHEDULE

GRAPHIC SCALE

4 0 4 8

Scale: 1/4 INCH = 1 FOOT

PROJECT NORTH

PLAN NORTH

STATE OF TEXAS
BRANDEN M. SCHNEIDER
129852
LICENSED
PROFESSIONAL ENGINEER
6.24.2021

US Army Corps of Engineers ®

MARK	DESCRIPTION	DATE

DESIGNED BY: B. SCHNEIDER
DRAWN BY: A. CLEAR
CHECKED BY: A. FORAN
SUBMITTED BY: E. OLNESS
SIZE: ANSI D
ISSUE DATE: JUNE 2022
CONTRACT NO.: W912PP-22-R-0021
FILENAME: KA69-951-M-401

US ARMY CORPS OF ENGINEERS
ALBUQUERQUE
ALBUQUERQUE, NEW MEXICO

JACOBS
JACOBS ENGINEERING GROUP INC.
777 Main Street
Fort Worth, Tx 76102

COMBAT RESCUE HELICOPTER SIMULATOR FACILITY
KIRTLAND AIR FORCE BASE (AFB)
BERNALILLO COUNTY, NEW MEXICO

CRH SIMULATOR FACILITY ADAL
ENLARGED MECHANICAL PLANS

SHEET ID
951B
M-401

READY TO ADVERTISE

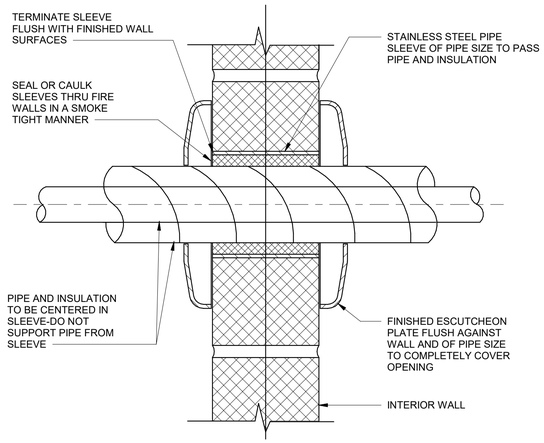

E1 PIPE SLEEVE THRU INTERIOR WALL

NTS

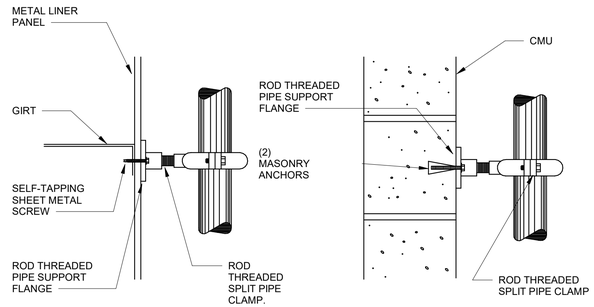

NOTE:
MASONRY ANCHOR SHALL BE EPOXY ADHESIVE TYPE WITH A MINIMUM CAPACITY OF 150 LBf AND SHEAR CAPACITY OF 300 LBf. SUBMIT MANUFACTURER'S DATA FOR APPROVAL

E4 TYPICAL WALL PIPE SUPPORT DETAIL

NTS

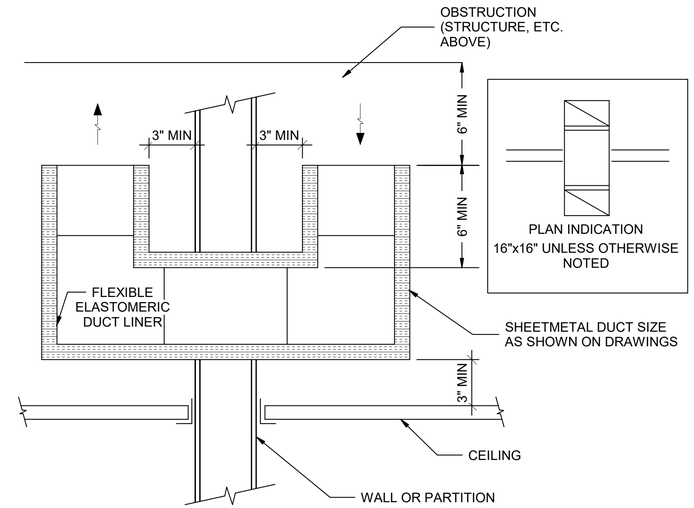

E7 RETURN AIR SOUND BOOT DETAIL

NTS

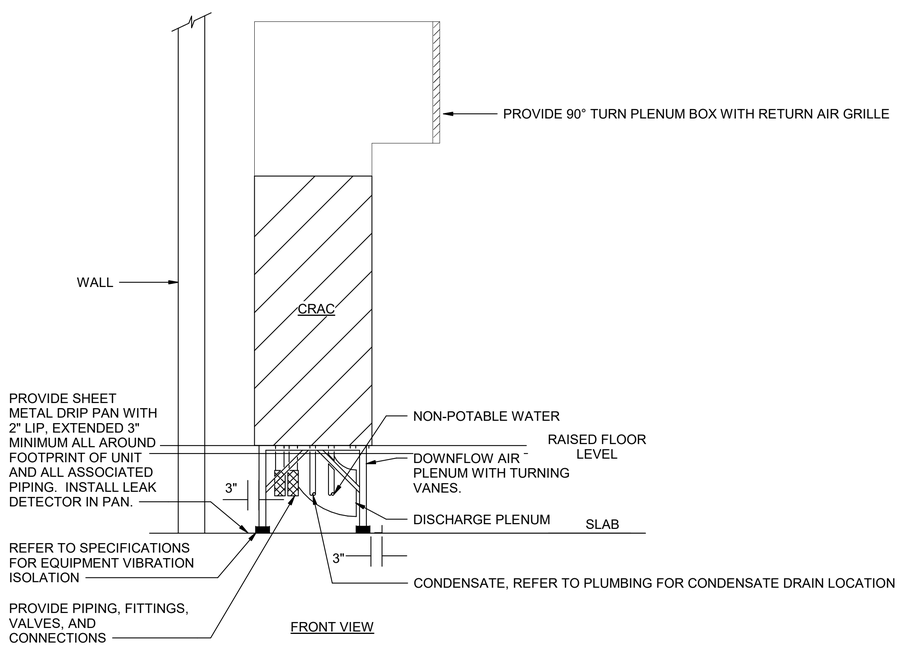

A1 TYPICAL CRAC DETAIL

SCALE NTS

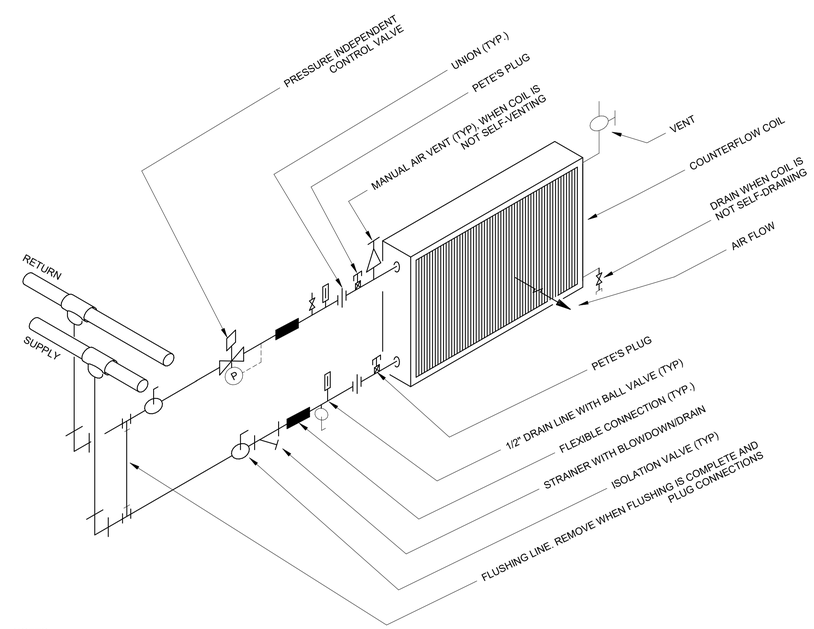

NOTES:
1. WHEN COIL IS INCLUDED IN CASING MOUNTED ON VIBRATION ISOLATORS THE FIRST TWO (2) HANGERS FOR EACH PIPE SHALL BE SPRING AND NEOPRENE TYPE.
2. PIPING SHALL BE INSTALLED WITH REMOVABLE SPOOLS AT EQUIPMENT AND SHALL NOT BLOCK ACCESS DOORS, PANELS, OR SERVICE AREA FOR FILTERS, VALVES, OR EQUIPMENT.
3. PROVIDE DI-ELECTRIC WATER WAYS WHERE DISSIMILAR PIPES JOIN, PER SPECIFICATIONS.
4. LOCATE ISOLATION VALVES IN SUCH A MANNER THAT THEY WILL NOT BLOCK FUTURE REMOVAL OF THE ENTIRE UNIT.
5. USE BALL VALVE FOR LINES 2" AND SMALLER. USE BUTTERFLY VALVES FOR LINES OVER 2".
6. CONTROL VALVE NOT REQUIRED FOR UNIT HEATERS.

A6 WATER COIL PIPING (TWO-WAY VALVE SINGLE COIL)

NTS

STATE OF TEXAS
BRANDEN M. SCHNEIDER
129852
LICENSED
PROFESSIONAL ENGINEER
6.24.2021

READY TO ADVERTISE

US Army Corps of Engineers ®

MARK	DESCRIPTION	DATE

ISSUE DATE: JUNE 2022
CONTRACT NO.: W912PP-22-R-0021

DESIGNED BY: B. SCHNEIDER
DRAWN BY: A. CLEAR
CHECKED BY: A. FORAN
SUBMITTED BY: E. OLNESS
SIZE: ANSI D
FILENAME: KA86-951-M-501

US ARMY CORPS OF ENGINEERS
ALBUQUERQUE
ALBUQUERQUE, NEW MEXICO

JACOBS
JACOBS ENGINEERING GROUP INC.
777 Main Street
Fort Worth, TX 76102

COMBAT RESCUE HELICOPTER SIMULATOR FACILITY
KIRTLAND AIR FORCE BASE (AFB),
BERNALILLO COUNTY, NEW MEXICO

CRH SIMULATOR FACILITY ADAL
MECHANICAL DETAILS

SHEET ID
951B
M-501

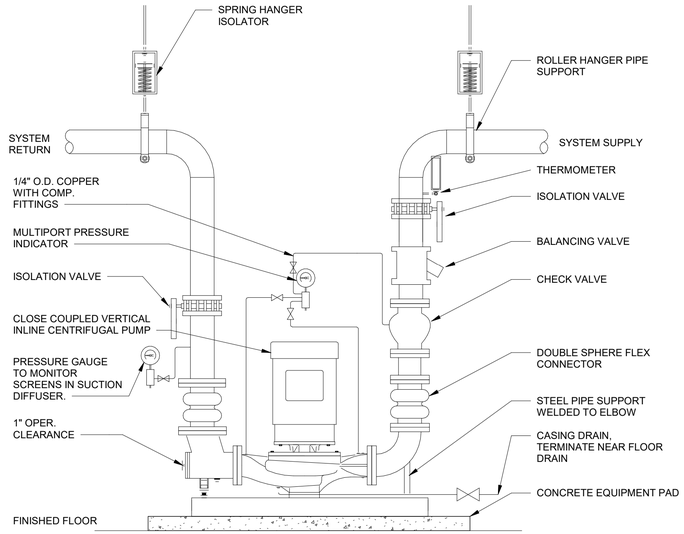

E1 VERTICAL INLINE PUMP INSTALLATION DETAIL
NTS

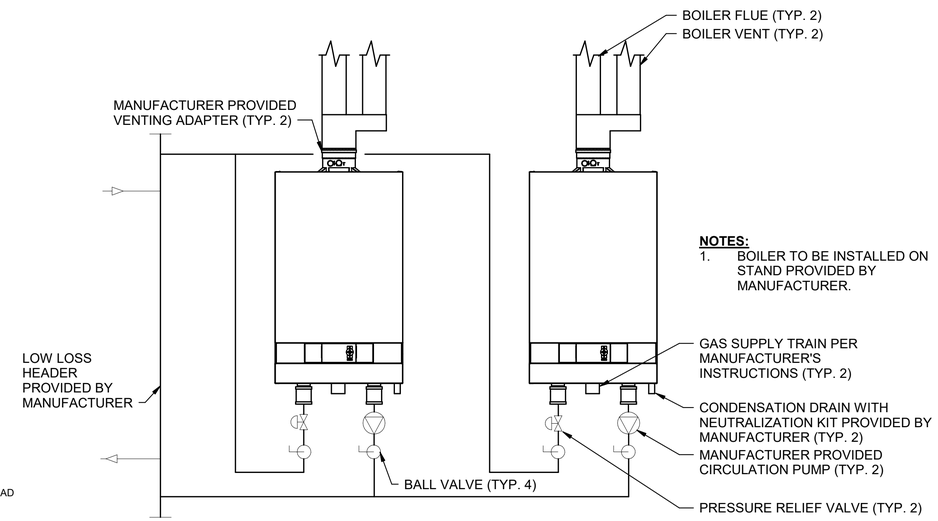

NOTES:
1. BOILER TO BE INSTALLED ON STAND PROVIDED BY MANUFACTURER.

E4 BOILER PIPING DETAIL
NTS

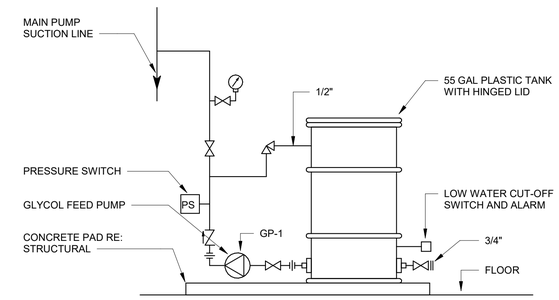

E8 GLYCOL FEEDER ASSEMBLY DETAIL
NTS

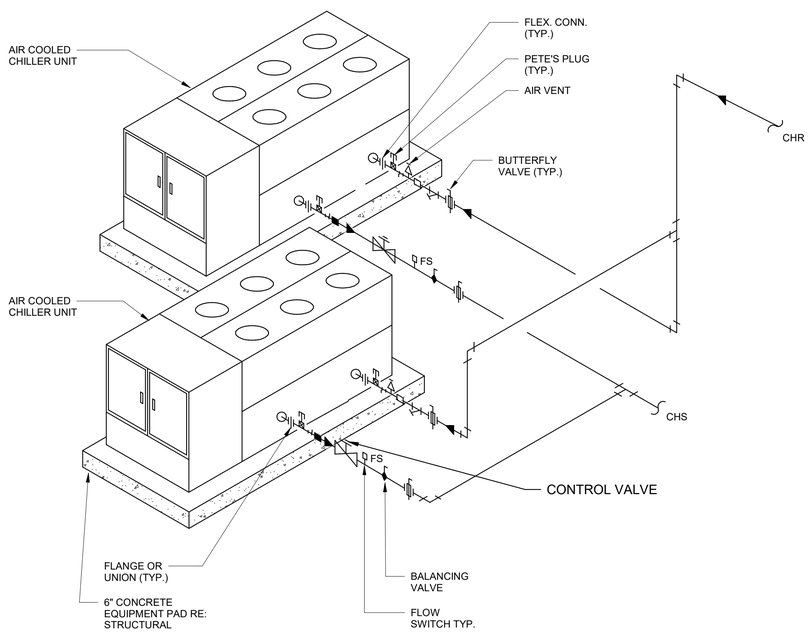

A1 PACKAGED AIR-COOLED CHILLER PIPING DETAIL
NTS

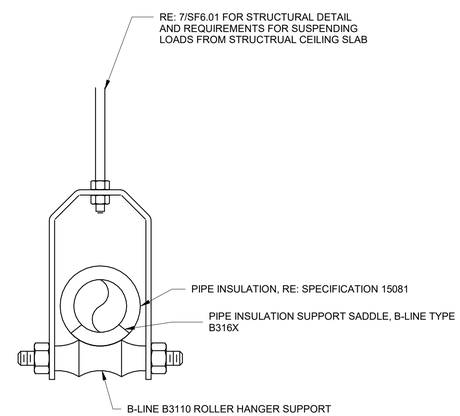

NOTES:
1. PROVIDE MASON INDUSTRIES TYPE DNHS SPRING ISOLATION HANGER AT FIRST THREE CONNECTION POINTS NEAREST TO VIBRATING EQUIPMENT.
2. PROVIDE TYPICAL HANGER ASSEMBLY AS SHOWN ABOVE FOR ALL SUSPENDED HOT WATER, CHILLED WATER AND CONDENSER WATER PIPING IN FIRST FLOOR MECHANICAL ROOM.
3. REFER TO SPECIFICATIONS FOR PIPE SPACING AND HANGER ROD SIZE REQUIREMENTS.

A4 MECHANICAL ROOM PIPE SUPPORT
NTS

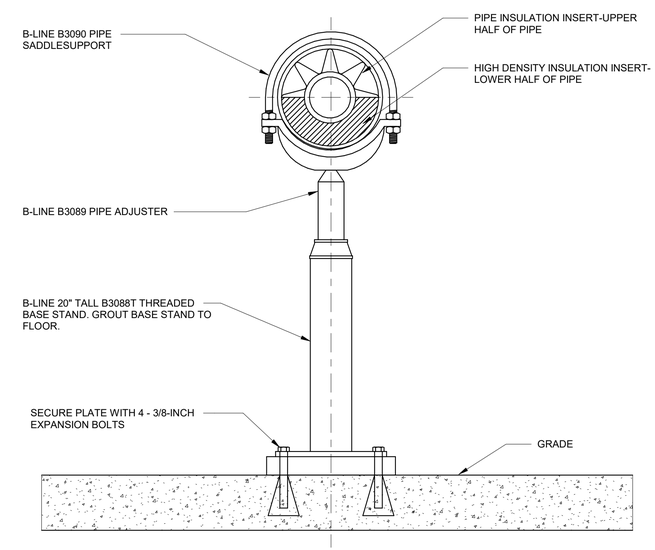

A7 TYPICAL MECHANICAL YARD PIPE SUPPORT DETAIL
NTS

STATE OF TEXAS
BRANDEN M. SCHNEIDER
129852
LICENSED PROFESSIONAL ENGINEER
6.24.2021

US Army Corps of Engineers ®

MARK	DESCRIPTION	DATE

ISSUE DATE: JUNE 2022
CONTRACT NO.: W912PP-22-R-0021

DESIGNED BY: B. SCHNEIDER
DRAWN BY: A. CLEAR
CHECKED BY: C. KORPASH
SUBMITTED BY: E. OLMESS
SIZE: ANSI D
FILENAME: K469-951-M-502

US ARMY CORPS OF ENGINEERS
ALBUQUERQUE
ALBUQUERQUE, NEW MEXICO

JACOBS®
JACOBS ENGINEERING GROUP INC.
777 Main Street
Fort Worth, Texas 76102

COMBAT RESCUE HELICOPTER SIMULATOR FACILITY
KIRTLAND AIR FORCE BASE (AFB)
BERNALILLO COUNTY, NEW MEXICO

CRH SIMULATOR FACILITY ADAL
MECHANICAL DETAILS

SHEET ID
951B
M-502

READY TO ADVERTISE

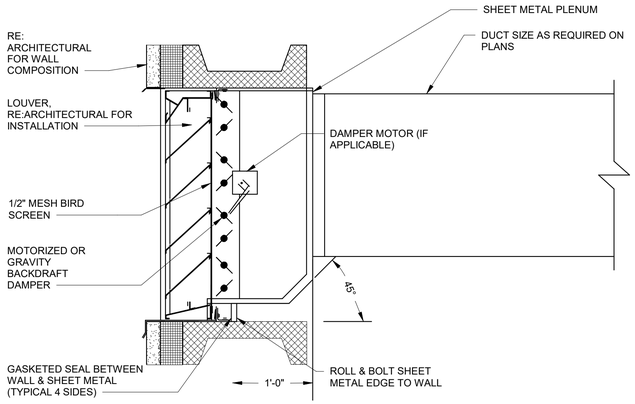

D1 INTAKE/DISCHARGE LOUVER DETAIL

NTS

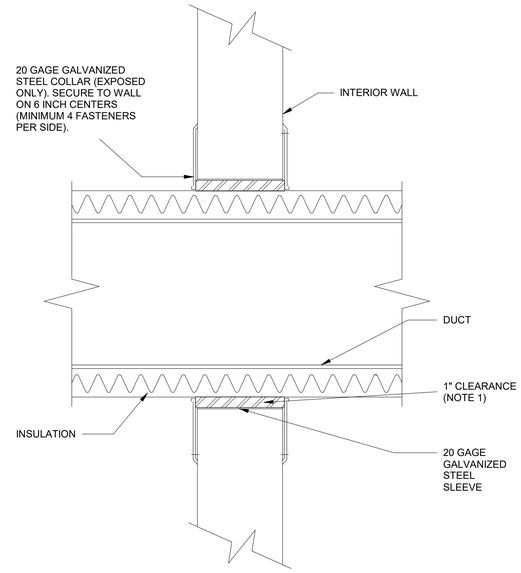

NOTES:
1. PACK SPACES BETWEEN OPENING AND DUCT INSULATION WITH MINERAL FIBER CONFORMING WITH ASTM C 553
2. WALL IS INTERIOR AND NOT FIRE RATED

D4 TYPICAL DUCTWORK INTERIOR WALL PENETRATION

NTS

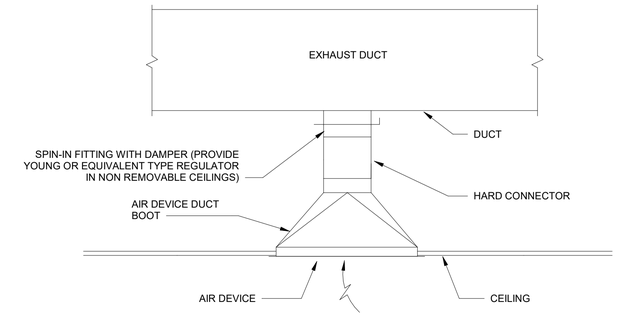

NECK SIZE	CFM RANGE
6" ø	0-75
8" ø	76-175
10" ø	176-300
12" ø	301-500

D7 EXHAUST AIR DEVICE CONNECTION DETAIL

NTS

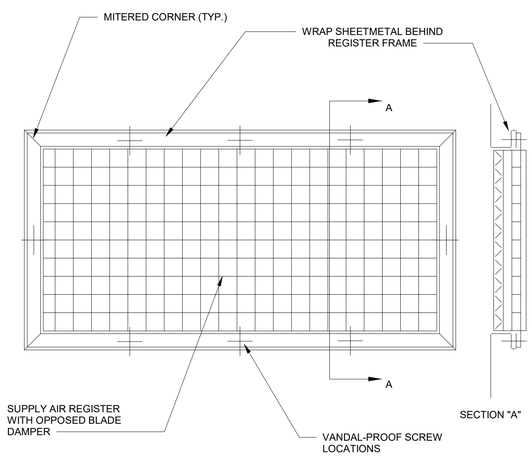

A1 TYPICAL SUPPLY/RETURN AIR REGISTER DETAIL

NTS

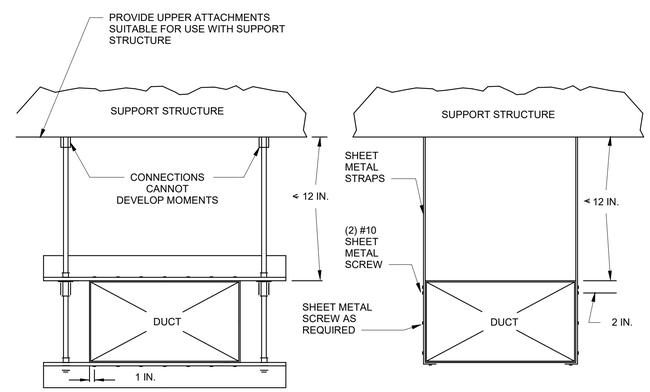

NOTES:
1. PROVIDE UPPER ATTACHMENTS, SUPPORTS, AND SMACNA REQUIREMENTS.
2. MAINTAIN HANGER LENGTH OF LESS THAN 12" WHERE POSSIBLE.

A4 TYPICAL DUCT SUPPORT DETAILS

NTS

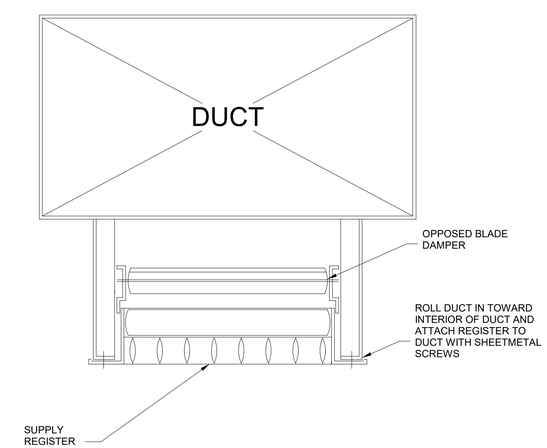

A7 TYPICAL DUCT MOUNTED REGISTER DETAIL

NTS

STATE OF TEXAS
BRANDEN M. SCHNEIDER
129852
LICENSED
PROFESSIONAL ENGINEER
6.24.2021

US Army Corps of Engineers ®

MARK	DESCRIPTION	DATE

DESIGNED BY: B. SCHNEIDER
DRAWN BY: A. CLEAR
CHECKED BY: A. FORAN
SUBMITTED BY: E. OLMESS
SIZE: ANSI D
ISSUE DATE: JUNE 2022
CONTRACT NO.: W912PP-22-R-0021
FILENAME: K408-951-M-503

US ARMY CORPS OF ENGINEERS
ALBUQUERQUE
ALBUQUERQUE, NEW MEXICO

JACOBS
JACOBS ENGINEERING GROUP INC.
777 Main Street
Fort Worth, Texas 76102

COMBAT RESCUE HELICOPTER SIMULATOR FACILITY
KIRTLAND AIR FORCE BASE (AFB)
BERNALILLO COUNTY, NEW MEXICO

CRH SIMULATOR FACILITY ADAL
MECHANICAL DETAILS

SHEET ID
951B
M-503

READY TO ADVERTISE

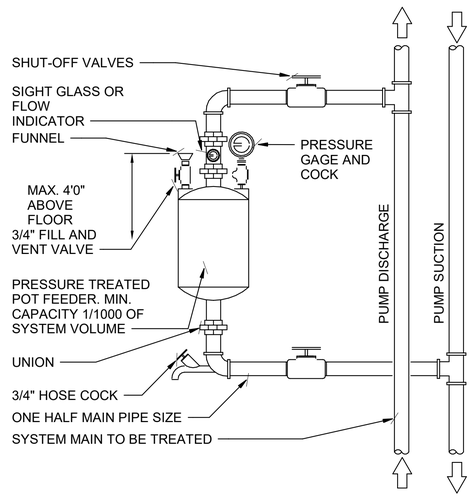

D1 CHEMICAL POT DETAIL
NTS

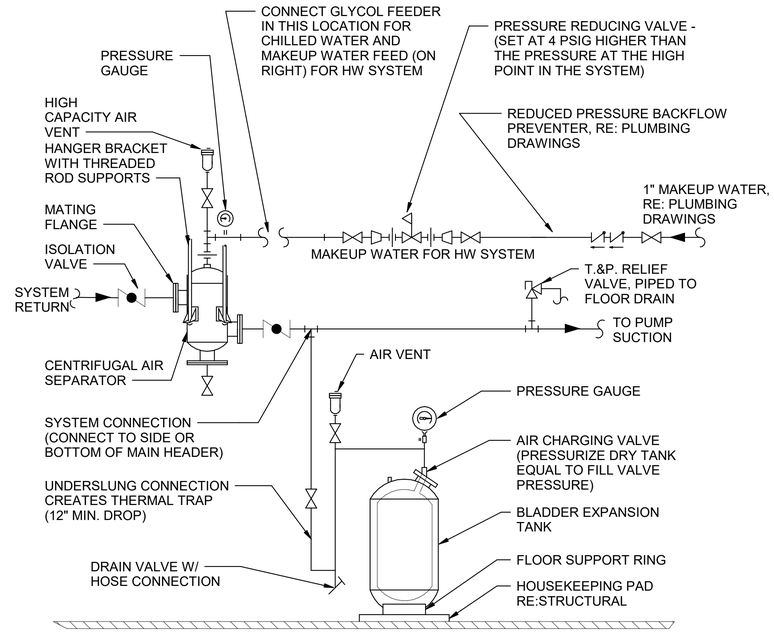

D4 AIR SEPARATOR AND EXPANSION TANK PIPING DETAIL
NTS

NOTE:
MINIMUM BEND IN FLEXIBLE DUCTWORK SHALL NOT BE LESS THAN ONE DUCT DIAMETER BEND RADIUS BASED ON THE INSIDE DUCT DIAMETER.

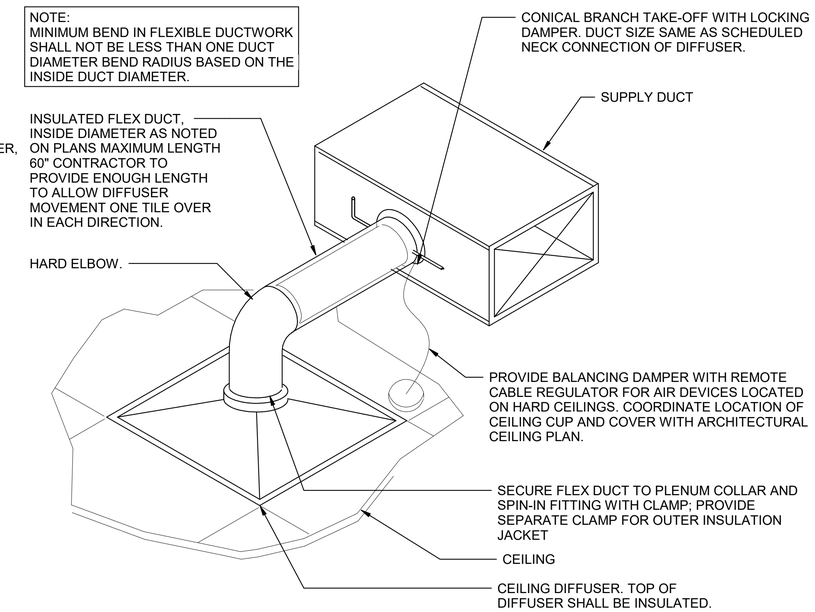

D7 CEILING DIFFUSER DETAIL
NTS

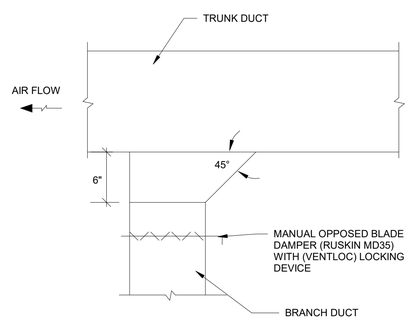

A1 BRANCH TAKE OFF
NTS

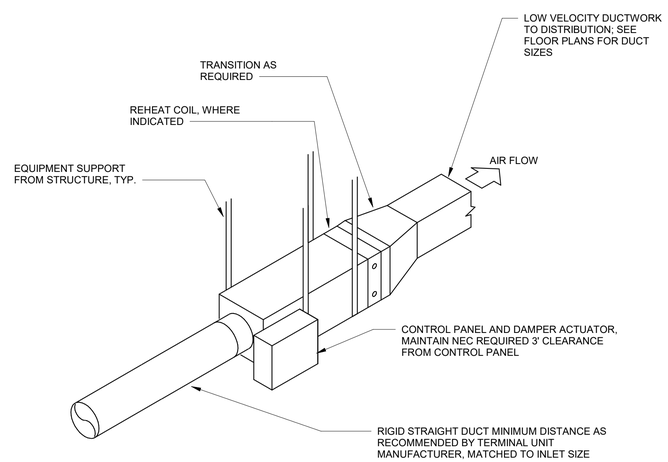

NOTES:
1. DO NOT SUPPORT UNIT WITH DUCTWORK (SUPPORT SEPARATELY).

A4 TYPICAL SINGLE DUCT TERMINAL UNIT W/ REHEAT COIL DETAIL
NTS

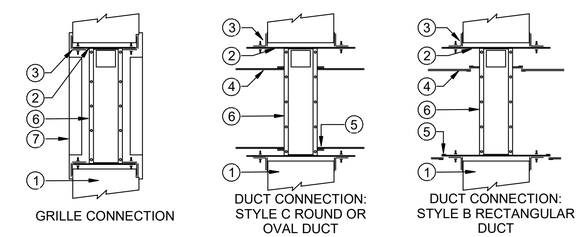

NOTES BY SYMBOL " O "

1. FIRE SEPARATION
2. SLEEVE
3. MOUNTING ANGLE
4. DUCT
5. DUCT CONNECTION
6. FIRE DAMPER
7. SIDEWALL GRILLE

FIRE DAMPER INSTALLATION NOTES:

1. INSTALL ALL FIRE DAMPERS IN ACCORDANCE WITH MANUFACTURER'S INSTALLATION INSTRUCTIONS, AND IN COMPLETE COMPLIANCE WITH UL 555 FIRE DAMPERS, NFPA 90A & 90B.
2. PROVIDE DUCT ACCESS DOORS AT ALL FIRE DAMPER LOCATIONS OF SUFFICIENT SIZE TO ALLOW INSPECTION AND TO RESET LINKAGE.
3. PROVIDE ACCESS DOORS IN ALL FIXED CEILINGS FOR ACCESS TO DUCT DOORS.

A7 FIRE DAMPER DETAILS
NTS

STATE OF TEXAS
BRANDEN M. SCHNEIDER
129852
LICENSED
PROFESSIONAL ENGINEER
6.24.2021

US Army Corps of Engineers ®

MARK	DESCRIPTION	DATE

DESIGNED BY: B. SCHNEIDER
DRAWN BY: A. CLEAR
CHECKED BY: A. FORAN
SUBMITTED BY: E. OLMESS
SIZE: ANSI D
FILENAME: K408-951-M-504
ISSUE DATE: JUNE 2022
CONTRACT NO.: W912PP-22-R-0021

US ARMY CORPS OF ENGINEERS
ALBUQUERQUE
ALBUQUERQUE, NEW MEXICO

JACOBS
JACOBS ENGINEERING GROUP INC.
777 Main Street
Fort Worth, TX 76102

COMBAT RESCUE HELICOPTER SIMULATOR FACILITY
KIRTLAND AIR FORCE BASE (AFB)
BERNALILLO COUNTY, NEW MEXICO

CRH SIMULATOR FACILITY ADAL
MECHANICAL DETAILS

SHEET ID
951B
M-504

READY TO ADVERTISE

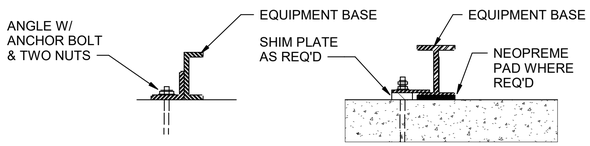

RESTRAINTS OF RIGIDLY MOUNTED MECHANICAL EQUIPMENT

D1 SEISMIC RESTRAINTS AND SUPPORTS FOR FLOOR MOUNTED EQUIPMENT

NTS

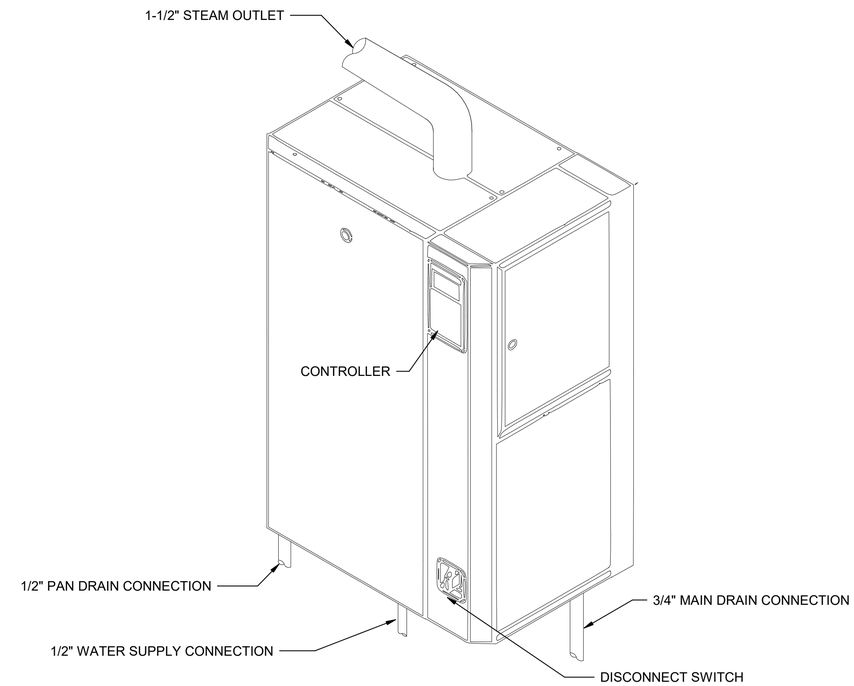

D8 HUMIDIFIER DIAGRAM

NTS

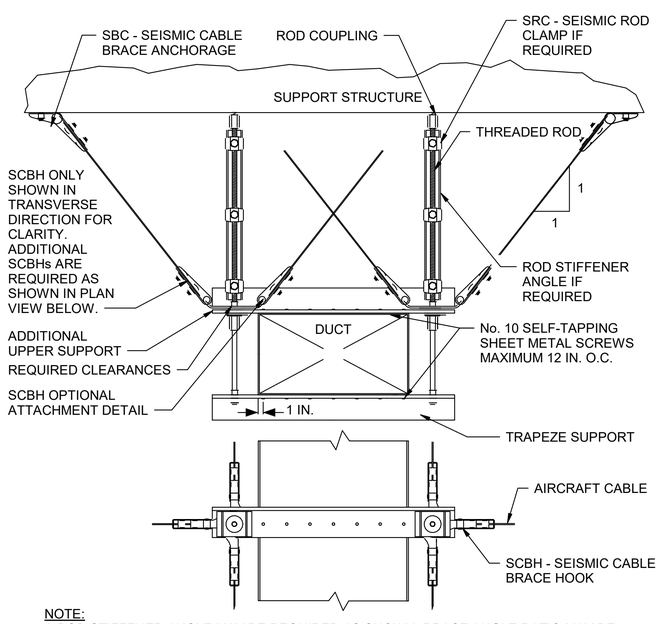

NOTE:
A ROD STIFFENER ANGLE MAY BE REQUIRED AS SHOWN. BRACE ANGLE RATIO MAY BE INCREASED TO 2(VERT.) : 1(HORIZ.).

A1 SEISMIC DETAILS FOR RECTANGULAR DUCTWORK

NTS

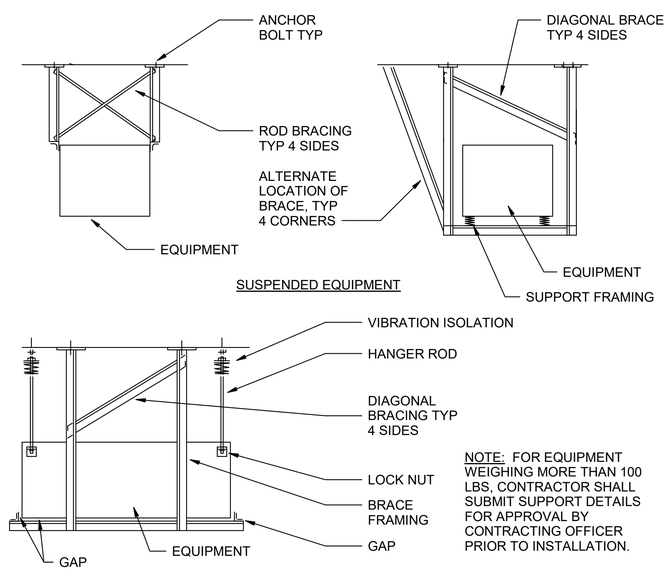

SUSPENDED EQUIPMENT

SUSPENDED EQUIPMENT WITH VIBRATION MOUNT

NOTE: FOR EQUIPMENT WEIGHING MORE THAN 100 LBS, CONTRACTOR SHALL SUBMIT SUPPORT DETAILS FOR APPROVAL BY CONTRACTING OFFICER PRIOR TO INSTALLATION.

A4 TYPICAL SEISMIC RESTRAINTS AND SUPPORTS FOR SUSPENDED EQUIPMENT

NTS

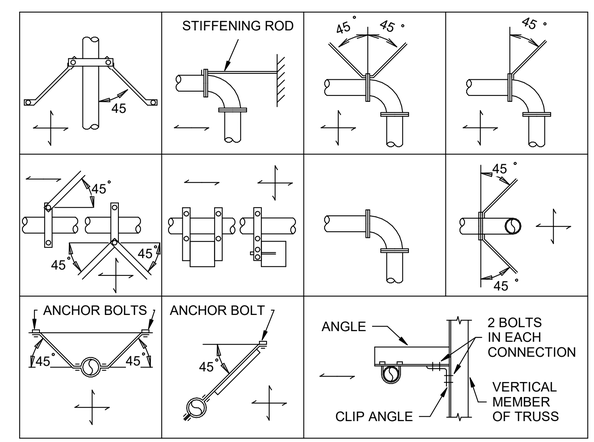

A8 SEISMIC DETAILS FOR SWAY BRACING

NTS

STATE OF TEXAS
BRANDEN M. SCHNEIDER
129852
LICENSED
PROFESSIONAL ENGINEER
6.24.2021

US Army Corps of Engineers ®

MARK	DESCRIPTION	DATE

ISSUE DATE: JUNE 2022
CONTRACT NO.: W912PP-22-R-0021

DESIGNED BY: B. SCHNEIDER
DRAWN BY: A. CLEAR
CHECKED BY: A. FORAN
SUBMITTED BY: E. OLMESS
SIZE: ANSI D
FILENAME: K469-951-M-504

US ARMY CORPS OF ENGINEERS
ALBUQUERQUE
ALBUQUERQUE, NEW MEXICO

JACOBS
JACOBS ENGINEERING GROUP INC.
777 Main Street
Fort Worth, Texas 76102

COMBAT RESCUE HELICOPTER SIMULATOR FACILITY
KIRTLAND AIR FORCE BASE (AFB)
BERNALILLO COUNTY, NEW MEXICO

CRH SIMULATOR FACILITY ADAL
MECHANICAL DETAILS

SHEET ID
M-505

READY TO ADVERTISE

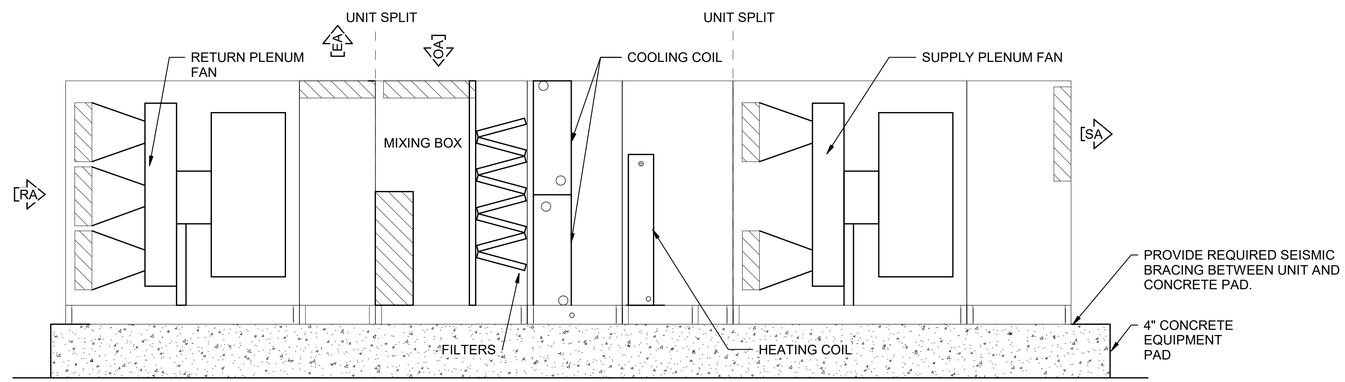

E1 AHU-1 DETAIL

SCALE NTS

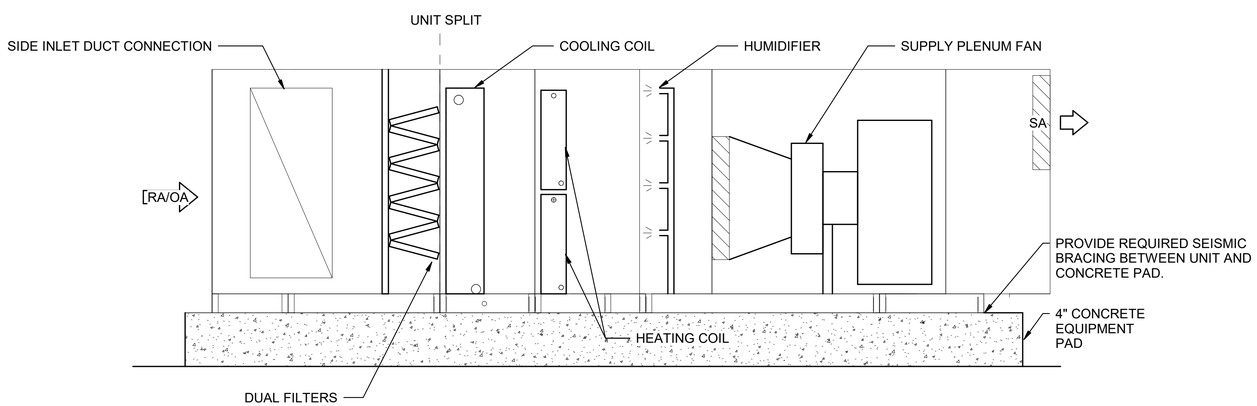

B1 AHU-2 DETAIL

SCALE NTS

STATE OF TEXAS
BRANDEN M. SCHNEIDER
129852
LICENSED
PROFESSIONAL ENGINEER
6.24.2021

US Army Corps of Engineers ®

MARK	DESCRIPTION	DATE

DESIGNED BY: B. SCHNEIDER
DRAWN BY: A. CLEAR
CHECKED BY: A. FORAN
SUBMITTED BY: E. OLMESS
SIZE: ANSI D
FILENAME: K486-951-M-506
ISSUE DATE: JUNE 2022
CONTRACT NO.: W912PP-22-R-0021

US ARMY CORPS OF ENGINEERS
ALBUQUERQUE
ALBUQUERQUE, NEW MEXICO

JACOBS
JACOBS ENGINEERING GROUP INC.
777 Main Street
Fort Worth, TX 76102

COMBAT RESCUE HELICOPTER SIMULATOR FACILITY
KIRTLAND AIR FORCE BASE (AFB)
BERNALILLO COUNTY, NEW MEXICO

CRH SIMULATOR FACILITY ADAL
MECHANICAL DETAILS

SHEET ID
M-506

READY TO ADVERTISE

CHILLER SCHEDULE

SCHEDULE	MARK	LOCATION	MIN CAPACITY (TONS)	REFRIGERANT	EER	NPLV.IP	WATER FLOW (GPM)	PD (FT HG)	MIN WATER FLOW (GPM)	EWT °F	LWT °F	GLYCOL %	COMPRESSOR QUANTITY	COMPRESSOR TYPE	AMBIENT TEMP °F	UNIT DIMENSIONS LENGTH	WIDTH	HEIGHT	ELECTRICAL VOLT	PH	MCA	MOCP	WEIGHT
CHILLER	CH-1	MECHANICAL YARD	56	R410A	8.56	15.65	115.8	9.3	61	54	42	30	2	SCROLL - HERMETIC	100	102	89	95	460	3	154	175	3900
CHILLER	CH-2	MECHANICAL YARD	56	R410A	8.56	15.65	115.8	9.3	61	54	42	30	2	SCROLL - HERMETIC	100	102	89	95	460	3	154	175	3900

NOTES:
1. CH-1 BASIS OF DESIGN YORK YLAA0041HE46XCBBCXX.
2. CH-2 BASIS OF DESIGN YORK YLAA0041HE46XCBBCXX.
3. PROVIDE WITH FULL-UNIT LOUVERED HAIL GUARD TO COVER COIL AND BASE AREA. PROVIDE WITH CONVENIENCE OUTLET AND CONTROL TRANSFORMER.
4. PROVIDE WITH SINGLE POINT ELECTRICAL CONNECTION COMPLETE WITH UNIT-MOUNTED DISCONNECT, MOTOR STARTER AND CONTROLS.
5. MAINTAIN MANUFACTURER SPECIFIED MINIMUM CLEARANCES ON ALL SIDES.
6. REFER TO HYDRONIC SYSTEM CHARACTERISTICS SCHEDULE FOR FLUID PROPERTIES.
7. PROVIDE BACNET IP CARD.
8. EQUIPMENT SELECTED AT ALTITUDE OF 5400 FT.
9. PROVIDE HOT GAS BY-PASS
10. PROVIDE LOW AMBIENT CONTROL WITH VARIABLE SPEED FANS

BOILER SCHEDULE

MARK	LOCATION	FUEL	INPUT CAPACITY (MBH)	OUTPUT CAPACITY (MBH)	MIN EFFICIENCY	EWT °F	LWT °F	GPM	HEAD LOSS (FT HG)	COMBUSTION AIR INLET (IN)	FLUE CONNECTION (IN)	OVERALL UNIT DIMENSIONS LENGTH (IN)	WIDTH (IN)	HEIGHT (IN)	ELECTRICAL VOLT	PHASE	FLA
B-1	MECHANICAL ROOM	NAT. GAS	428	400	93.3	110	140	26.7	8.5	6	4-3/8	28	24	44.5	120	1	12
B-2	MECHANICAL ROOM	NAT. GAS	428	400	93.3	110	140	26.7	8.5	6	4-3/8	28	24	44.5	120	1	12

NOTES:
1. CONDENSING BOILER DESIGNED FOR VARIABLE TEMPERATURE.
2. PROVIDE FULLY MODULATING LOW NOx BURNER WITH 15 TO 1 TURNDOWN.
3. PROVIDE WITH MANUFACTURER'S CONTROLLER TO INTEGRATE TO BMS.
4. PROVIDE UL LISTED UNIT AND ASME CSD-1 COMPLIANT.
5. DESIGN BASED ON VITODENS 200-W, B2HA-530 WITH MULTIPLE BOILER LOW-LOSS HEADER.
6. PROVIDE CONDENSATE NEUTRALIZATION KIT BY EQUIPMENT MANUFACTURER.
7. EXPECTED INLET GAS PRESSURE WILL BE 7 IN. W.C.
8. PROVIDE INSULATED LOW LOSS HEADER.
9. PROVIDE EACH BOILER WITH INTEGRAL RECIRCULATING PUMP IN THE BOILER SKID TO MAINTAIN MINIMUM FLOW.
10. EQUIPMENT DERATED FOR 5,400 FT ALTITUDE - 0.858 BTU/ACF.
11. PROVIDE EMERGENCY SHUT OFF SWITCH.
12. PROVIDE WITH VENTING ADAPTER FOR SEPERATE FLU AND VENT PIPING.

AIR HANDLING UNIT SCHEDULE

MARK	LOCATION	SUPPLY FAN CFM	MINIMUM OA	TSP (IN WG)	ESP (IN WG)	FAN BHP	FAN RPM	SUPPLY FAN ELECTRICAL VOLT	PH	MCA	MOCP	RETURN / EXHAUST FAN CFM	TSP (IN WG)	ESP (IN WG)	FAN HP	FAN RPM	RETURN / EXHAUST FAN ELECTRICAL VOLT	PH	MCA	MOCP	CHILLED WATER COOLING COIL TOTAL CAPACITY (MBH)	SENSIBLE CAPACITY (MBH)	GPM	EWT °F	LWT °F	EAT °F (DB/WB)	LAT °F (DB/WB)	MAX COIL PD (FT WG)	FACE VEL MAX (FPM)	MAX AIR PD (IN WG)	WEIGHT (LBS)
AHU-1	MECHANICAL ROOM	7700	2235	4.00	1.50	(4) 3.3	2885	460	3	17.4	20	7700	0.67	0.50	(3) 2.3	2082	460	3	9.8	15	247.5	235.3	45.7	42	55	86.2 / 60.6	54.0 / 50.0	6.9	500	0.68	3766
AHU-2	MEZZANINE	18300	500	3.83	1.8	(4) 4	2600	460	3	34.0	40	-	-	-	-	-	-	-	-	-	308.2	308.2	52.8	42	55	69.5 / 73.5	50.8/ 45.7	13.1	485	0.33	5040

HUMIDIFIER SCHEDULE

MARK	CAPACITY (LB/HR)	OUTLET DIAMETER (IN.)	ELECTRICAL POWER (kW)	AMPS	VOLTAGE/ PHASE	MAX UNIT SIZE (IN) L	W	H	MAX UNIT WEIGHT (LBS)
H-1	18.0	1.375	6	7.2	460/3	23	20	14	85

NOTES:
1. HUMIDIFIER TO SERVE AHU-2.
2. AHU-2 MANUFACTURER TO PROVIDE INTEGRAL STEAM DISPERSER INSIDE OF AHU-2.
3. PROVIDE FLEXIBLE METAL PIPE FOR STEAM CONNECTION TO AHU-2
4. HUMIDIFICATION BASED ON HUMIDIFICATION OF MIXED AIR CONDITION OF 67°F/47°F DB/WB

AIR HANDLING UNIT SCHEDULE CONT.

MARK	HEATING WATER COIL TOTAL CAPACITY (MBH)	GPM	EWT °F	LWT °F	EAT °F (DB)	LAT °F (DB)	FACE VEL MAX FPM	MAX AIR PD IN WG	FILTER PRE-FILTER TYPE	FINAL FILTER TYPE	UNIT DIMENSIONS LENGTH (IN)	WIDTH (IN)	HEIGHT (IN)
AHU-1	184.7	12.9	140	110	53.2	77.6	700	0.39	PLEATED, MERV 8	PRE PLEAT, MERV 13	232	68	66
AHU-2	117.8	7.8	140	110	63.3	85.2	506	1.80	PLEATED, MERV 8	PRE PLEAT, MERV 13	224	78	96

NOTES:
1. AHU-1: (4) FAN SUPPLY FAN ARRAY & (3) FAN RETURN FAN ARRAY WITH ECM MOTORS.
2. AHU-2: ECM MOTORS ON SUPPLY & RETURN FANS.
3. PROVIDE BASE RAILS.
4. MOUNT SUPPLY FANS ON INTERNAL SPRING VIBRATION ISOLATORS.
5. MERV 8 PREFILTER.
6. MERV 13 FINAL FILTER.
7. ALL COOLING COILS SELECTED FOR OPERATION WITH 30% PROPYLENE GLYCOL.
8. PROVIDE NEMA PREMIUM EFFICIENT MOTORS WITH BEARING GROUNDING FOR SUPPLY FANS.
9. PROVIDE UNITS IN COMPLIANCE WITH ASHRAE 62.1 -2007 AND ASHRAE 90.1-2013.
10. PROVIDE DOUBLE WALL CONSTRUCTION WITH 2 INCH WALLS, HIGH DENSITY INSULATION (R-13) AND PERFORATED INNER LINER.
11. LOW LEAKAGE MOTORIZED DAMPERS FOR OSA INTAKE AND RELIEF.
12. UNITS SHALL BE CAPABLE FOR 100% OUTSIDE AIR ECONOMIZATION.
13. EQUIPMENT DERATED FOR 5,400 FT ALTITUDE
14. BASIS OF DESIGN: DAIKIN CAH017 & CAH040, RESPECTIVELY.

DUCT PRESSURE CLASSIFICATIONS		
DUCT SYSTEM	PRESSURE CLASS	SEAL CLASS
WSDX DUCTWORK	2	A
EXHAUST DUCTWORK	2	A
AHU DUCTWORK	4	A

NOTES:
1. PRESSURE CLASS AND SEAL CLASS SHALL MEET THE REQUIREMENTS LISTED IN SMACNA DUCT CONSTRUCTION STANDARDS.

VARIABLE AIR VOLUME BOX SCHEDULE

BOX	UNIT SIZE	AIR HANDLING UNIT	SERVICE	MAX AIRFLOW (CFM)	MIN AIRFLOW (CFM)	PRIMARY INLET S.P. (in. W.C.)	DOWNSTREAM S.P. (in. W.C.)	HEATING COIL AIRFLOW (CFM)	CAPACITY (MBH)	LAT (°F)	EWT (°F)	LWT (°F)	FLOW (GPM)	BASIS OF DESIGN MANUFACTURER	MODEL
TU-1	08	AHU-1	CORRIDOR 101	760 CFM	228 CFM	1.0	0.5	380 CFM	11.6	88.0 °F	140 °F	125.0 °F	1.6	TRANE	VCWF08
TU-2	08	AHU-1	ATD 120	600 CFM	180 CFM	1.0	0.5	300 CFM	7.1	88.0 °F	140 °F	125.0 °F	1.0	TRANE	VCWF08
TU-3	10	AHU-1	ATD 120	940 CFM	282 CFM	1.0	0.5	470 CFM	14.5	88.0 °F	140 °F	125.0 °F	2.0	TRANE	VCWF10
TU-4	10	AHU-1	MISSION PLANNING 121	870 CFM	261 CFM	1.0	0.5	435 CFM	8.8	88.0 °F	140 °F	125.0 °F	1.2	TRANE	VCWF10
TU-5	10	AHU-1	MULTIPURPOSE 123	870 CFM	261 CFM	1.0	0.5	435 CFM	13.1	88.0 °F	140 °F	125.0 °F	1.8	TRANE	VCWF10
TU-6	06	AHU-1	MULTIPURPOSE 127 & 128	390 CFM	117 CFM	1.0	0.5	195 CFM	3.4	85.0 °F	140 °F	125.0 °F	0.5	TRANE	VCWF06
TU-7	08	AHU-1	CORRIDOR 101, JAN / STOR 125	460 CFM	138 CFM	1.0	0.5	230 CFM	6.0	88.0 °F	140 °F	125.0 °F	0.8	TRANE	VCWF08
TU-8	08	AHU-1	MULTIPURPOSE 136, WELLNESS	740 CFM	222 CFM	1.0	0.5	370 CFM	7.6	88.0 °F	140 °F	125.0 °F	1.0	TRANE	VCWF08
TU-9	10	AHU-1	MISSION PLANNING 122	1030 CFM	309 CFM	1.0	0.5	515 CFM	11.3	88.0 °F	140 °F	125.0 °F	1.5	TRANE	VCWF10
TU-10	08	AHU-1	CORRIDOR 101, MEN 132, WOMEN 131	600 CFM	180 CFM	1.0	0.5	300 CFM	8.0	88.0 °F	140 °F	125.0 °F	1.1	TRANE	VCWF08
TU-11	08	AHU-1	CORRIDOR 101, ADMINISTRATION 129	680 CFM	204 CFM	1.0	0.5	340 CFM	7.2	88.0 °F	140 °F	125.0 °F	1.0	TRANE	VCWF08
TU-12	10	AHU-1	MISSION PLANNING 137	840 CFM	252 CFM	1.0	0.5	420 CFM	8.6	88.0 °F	140 °F	125.0 °F	1.2	TRANE	VCWF10
TU-13	08	AHU-1	MULTIPURPOSE 134 & 135	780 CFM	234 CFM	1.0	0.5	390 CFM	7.8	88.0 °F	140 °F	125.0 °F	1.1	TRANE	VCWF08
TU-14	08	AHU-1	CORRIDOR 101, BREAK ROOM 133	600 CFM	180 CFM	1.0	0.5	300 CFM	7.9	88.0 °F	140 °F	125.0 °F	1.1	TRANE	VCWF08
TU-15	08	AHU-1	MULTIPURPOSE 127	450 CFM	135 CFM	1.0	0.5	225 CFM	3.4	88.0 °F	140 °F	125.0 °F	0.5	TRANE	VCWF08
TU-16	06	AHU-1	TELECOM 126	50 CFM	15 CFM	1.0	0.5	25 CFM	1.6	85.0 °F	140 °F	125.0 °F	0.2	TRANE	VCWF06
TU-17	06	AHU-1	IMAGE GENERATOR 2 130A	100 CFM	30 CFM	1.0	0.5	50 CFM	3.2	85.0 °F	140 °F	125.0 °F	0.4	TRANE	VCWF06
TU-18	06	AHU-1	IMAGE GENERATOR 3 130B	100 CFM	30 CFM	1.0	0.5	50 CFM	3.2	85.0 °F	140 °F	125.0 °F	0.4	TRANE	VCWF06

NOTES:
1. BASIS OF DESIGN TRANE #VCWF.

EXHAUST FAN SCHEDULE

MARK	SERVICE	FAN DATA CFM	SP IN WG	RPM	HP	TYPE	VOLT	PHASE	WEIGHT (LBS)	NOTES
EF-1	RESTROOM / JANITOR	980	0.6	1637	1/4	INLINE, CENTRIFUGAL	120	1	45	1,2,3,4,6
EF-2	MECH ROOM EXHAUST	830	0.4	1346	1/4	INLINE, CENTRIFUGAL	120	1	45	1,2,3,5,6
EF-3	ELEC ROOM EXHAUST	830	0.4	1346	1/4	INLINE, CENTRIFUGAL	120	1	45	1,2,3,5,6
EF-4	IMAGE GEN. ROOM PURGE	200	0.5	1567	1/10	INLINE, CENTRIFUGAL	120	1	40	1,2,3,5,7
EF-5	IMAGE GEN. ROOM PURGE	200	0.5	1567	1/10	INLINE, CENTRIFUGAL	120	1	40	1,2,3,5,7
SF-1	MECH ROOM MAKEUP	810	0.5	1140	1/10	INLINE, CENTRIFUGAL	120	1	61	1,2,3,5,7

NOTES:
1. PROVIDE WITH DISCONNECT SWITCH.
2. EQUIPMENT DERATED FOR 5,400 FT ALTITUDE.
3. PROVIDE VIBRATION ISOLATION.
4. PROVIDE LOW LEAK MOTORIZED DAMPER.
5. PROVIDE LOW LEAK BACKDRAFT DAMPER.
6. BASIS OF DESIGN: GREENHECK SQ-100-VG
7. BASIS OF DESIGN: GREENHECK SQ-95-VG

STATE OF TEXAS
BRANDEN M. SCHNEIDER
129852
LICENSED PROFESSIONAL ENGINEER
6.24.2021

US Army Corps of Engineers ®

MARK	DESCRIPTION	DATE

ISSUE DATE: JUNE 2022
CONTRACT NO.: W912PP-22-R-0021
DESIGNED BY: B. SCHNEIDER
DRAWN BY: A. CLEAR
CHECKED BY: A. FORAN
SUBMITTED BY: E. OLMESS
SIZE: ANSI D
FILENAME: K408-951-M-601

US ARMY CORPS OF ENGINEERS
ALBUQUERQUE
ALBUQUERQUE, NEW MEXICO

JACOBS
JACOBS ENGINEERING GROUP INC.
777 Main Street
Fort Worth, Texas 76102

COMBAT RESCUE HELICOPTER SIMULATOR FACILITY
KIRTLAND AIR FORCE BASE (AFB)
BERNALILLO COUNTY, NEW MEXICO

CRH SIMULATOR FACILITY ADAL
MECHANICAL SCHEDULES

SHEET ID
951B
M-601

READY TO ADVERTISE

OUTDOOR CONDENSING UNIT SCHEDULE

MARK	TYPE	TOTAL COOLING CAPACITY (MBH)	MIN. SEER	REFRIGERANT TYPE	ELECTRICAL V/HZ/PH	ELECTRICAL MCA	MAX UNIT SIZE (IN) H	MAX UNIT SIZE (IN) W	MAX UNIT SIZE (IN) D	WEIGHT (LBS)
CU-1	AIR COOLED	24.0	17.3	R410A	208/1	16.5	36	31	13.0	175

NOTES:
1. BASIS OF DESIGN: DAIKIN RZR24PVJU8
2. PROVIDE UNIT WITH HAIL GUARD.
3. SIZE REFRIGERANT PIPING PER MANUFACTURER RECOMMENDATIONS.

INDOOR DX FAN COIL UNIT SCHEDULE

MARK	LOCATION	SERVICE	AIRFLOW (CFM)	TOTAL COOLING CAPACITY (MBH)	SENSIBLE COOLING CAPACITY (MBH)	MAX UNIT SIZE (IN) H	MAX UNIT SIZE (IN) W	MAX UNIT SIZE (IN) D	WEIGHT (LBS)
DXFCU-1	TELECOM ROOM	TELECOM EQUIPMENT	600	24	18	42	12	9	40

NOTES:
1. BASIS OF DESIGN: DAIKIN FAQ24PVJU
2. PROVIDE UNIT WITH SEPARATE CONDENSATE PUMP WITH 5 GPH CAPACITY, 208V ELECTRICAL CONNECTION.
3. PROVIDE UNIT WITH UNIT MOUNTED THERMOSTAT.
4. POWER TO BE PROVIDED FROM CONDENSING UNIT.

COMPUTER ROOM CONDITIONING UNIT SCHEDULE

MARK	LOCATION	SERVICE	TYPE	FAN DATA AIRFLOW (CFM)	FAN DATA FAN QTY	FAN DATA E.S.P. (IN.W.G.)	FAN DATA FAN MOTOR (HP)	CHILLED WATER COOLING COIL TOTAL (MBH)	CHILLED WATER COOLING COIL SENSIBLE (MBH)	CHILLED WATER COOLING COIL GPM	CHILLED WATER COOLING COIL PD (FT HG)	CHILLED WATER COOLING COIL FACE VELOCITY (FPM)	CHILLED WATER COOLING COIL EAT (DB/WB) °F	CHILLED WATER COOLING COIL % RH	HOT WATER REHEAT COIL HEAT (MBH)	HOT WATER REHEAT COIL GPM	HOT WATER REHEAT COIL PD (FT HG)	VOLT/ PHASE	FLA	MCA	WEIGHT (LBS)	MANUFACTURER	MODEL
CRAC-1	IMAGE GEN. 2	IMAGE GEN. EQUIP.	VERTICAL	5000 CFM	1	0.50	3	119.9	119.9	26.6	11.1	160	78.0 / 61.0	40	77.5	5.2	11.1	460/3	15.4	19.3	1500	STULZ	CFD-060
CRAC-2	IMAGE GEN. 2	IMAGE GEN. EQUIP.	VERTICAL	5000 CFM	1	0.50	3	119.9	119.9	26.6	11.1	160	78.0 / 61.0	40	77.5	5.2	11.1	460/3	15.4	19.3	1500	STULZ	CFD-060
CRAC-3	IMAGE GEN. 3	IMAGE GEN. EQUIP.	VERTICAL	5000 CFM	1	0.50	3	119.9	119.9	26.6	11.1	160	78.0 / 61.0	40	77.5	5.2	11.1	460/3	15.4	19.3	1500	STULZ	CFD-060
CRAC-4	IMAGE GEN. 3	IMAGE GEN. EQUIP.	VERTICAL	5000 CFM	1	0.50	3	119.9	119.9	26.6	11.1	160	78.0 / 61.0	40	77.5	5.2	11.1	460/3	15.4	19.3	1500	STULZ	CFD-060

NOTES:
1. PROVIDE 4-15 LB/HR PROPORTIONAL STEAM HUMIDIFIER.
2. DOWNFLOW WITH TOP RETURN.
3. ALL COOLING COILS SELECTED FOR OPERATION WITH 30% PROPYLENE GLYCOL.
4. EQUIPMENT SELECTED AT ALTITUDE OF 5300 FT.
5. PROVIDE WITH CONDENSATE PUMP.

PUMP SCHEDULE

MARK	SERVICE	LOCATION	TYPE	FLOW (GPM)	PUMP HEAD (FT)	MAX DISCHARGE/ SUCTION (IN)	MIN. IMPELLER DIA. (IN.)	MIN EFFICIENCY (%)	MOTOR SPEED (RPM)	ELECTRICAL MAX BHP	ELECTRICAL MAX MOTOR HP	ELECTRICAL VOLTAGE/ PHASE	MAX UNIT SIZE (IN) L	MAX UNIT SIZE (IN) W	MAX UNIT SIZE (IN) H	MAX UNIT WEIGHT (LBS)
P-1	CHILLED WATER	MECHANICAL ROOM	INLINE, CENTRIFUGAL	154	105	34.5	5.875	67	3600	5.97	10	460/3	16	12	26	340
P-2	CHILLED WATER	MECHANICAL ROOM	INLINE, CENTRIFUGAL	154	105	34.5	5.875	67	3600	5.97	10	460/3	16	12	26	340
P-3	BOILER WATER	MECHANICAL ROOM	INLINE, CENTRIFUGAL	27	60	18	4.75	45.6	2814	0.75	3	460/3	12	8	18	175
P-4	BOILER WATER	MECHANICAL ROOM	INLINE, CENTRIFUGAL	27	60	18	4.75	45.6	2814	0.75	3	460/3	12	8	18	175

NOTES:
1. PUMP MOTORS TO BE RATED FOR VFD DUTY. PROVIDE PUMPS WITH VARIABLE FREQUENCY DRIVES AND INTEGRAL DISCONNECT.

BYPASS CHEMICAL FEEDER SCHEDULE

MARK	LOCATION	SERVICE	MOUNTING	TANK VOLUME (GAL)	MAXIMUM WORKING PRESSURE (PSI)	MAXIMUM WORKING TEMP. (°F)
BCF-1	MECHANICAL ROOM	CHILLED WATER	FLOOR	2	300	200
BCF-2	MECHANICAL ROOM	BOILER WATER	FLOOR	2	300	200

NOTES:
1. BASIS OF DESIGN IS NEPTUNE MODEL # FTF-2DB.
2. SHALL BE ASME RATED

AIR SEPARATOR SCHEDULE

MARK	LOCATION	SERVICE	DESIGN FLOW (GPM)	MAX PRESSURE (PSIG)
AS-1	MECH ROOM	CHILLED WATER	154	125
AS-2	MECH ROOM	BOILER WATER	27	125

NOTES:
1. BASIS OF DESIGN: TACO
2. PROVIDE UNIT WITH AUTOMATIC AIR VENT, BLOWDOWN VALVE, AND MAKE-UP AIR CONNECTION.
3. DESIGN AND CONSTRUCT PER ASME SECTION VIII, DIVISION 1.
4. PROVIDE REMOVABLE HEAD TO FACILITATE CLEANING.
5. REFER TO SYSTEM CHARACTERISTICS SCHEDULE.

GLYCOL FEEDER SCHEDULE

MARK	LOCATION	SERVICE	TANK VOLUME (GAL)	% PROPYLENE GLYCOL	TYPE	MOUNTING	VOLT/ PHASE
GF-1	MECH 119	CHILLED WATER	50	30	SINGLE	FLOOR	120/1

NOTES:
1. BASIS OF DESIGN: NEPTUNE MODEL #G-50-1A
2. PROVIDE COMPLETE SYSTEM WITH INTEGRAL PUMP, CONTROLS, LOW LEVEL LIGHT, AND AUDIBLE ALARM.

EXPANSION TANK SCHEDULE

MARK	SERVICE	VOLUME (GAL)	MIN. ACCEPTENCE VOLUME (GAL)	MIN. OPERATING TEMP (ºF)	MAX. OPERATING TEMP (°F)	MIN. FILL PRESSURE (PSIG)	RELIEF PRESSURE (PSIG)	MAX. DIMENSIONS - DIA x H (IN)	MAX. OPERATING WEIGHT (LBS)
ET-1	CHILLED WATER	32	11.3	40	60	12.7	70	15-3/8" x 47-1/2"	52
ET-2	BOILER WATER	80	27	40	200	12.7	70	24" x 56"	890

NOTES:
1. BASIS OF DESIGN: TACO
2. PROVIDE UNIT WITH VERTICAL, REPLACEABLE BLADDER, AIR FILL VALVE, TANK DRAIN AND GAUGE.
3. DESIGN AND CONSTRUCTION PER ASME SECTION VIII, DIVISION 1.
4. PROVIDE 18" CLEARANCE ABOVE TANK FOR PIPING SYSTEM CONNECTION.

HYDRONIC PIPE RUNOUT SIZING SCHEDULE

NOMINAL SIZE (IN.)	MAX FLOW (GPM)
3/4	3
1	7
1-1/4	13
1-1/2	20
2	44
2-1/2	80
3	125
4	250

AIR TERMINAL DEVICE SCHEDULE

MARK	SERVICE	DESCRIPTION	MATERIAL	NECK SIZE	MAX NECK VELOCITY (FPM)	FACE SIZE	MAX VELOCITY PRESSURE (IN W.C.)	MAX TOTAL PRESSURE (IN W.C.)	NEGATIVE STATIC PRESSURE (IN. W.C.)	MAXIMUM THROW (FT)	MAXIMUM FLOW (CFM)	MAXIMUM NOISE CRITERIA	NOTES
AD-1	SUPPLY AIR	CEILING MOUNTED	STEEL	6"	1000	24"x24"	0.06	0.10	0.00	22			
AD-2	SUPPLY AIR	CELING MOUNTED	STEEL	8"	1000	24"x24"	0.06	0.10	0.00	13	350	26	1
AD-3	SUPPLY AIR	SIDEWALL	STEEL	6"x6"	1000	6"x6"	0.06	0.10	0.00	25	190	26	2
AD-4	SUPPLY AIR	SIDEWALL	STEEL	8"x6"	1000	8"x6"	0.06	0.10	0.00	30	260	27	2
AD-5	SUPPLY AIR	SIDEWALL	STEEL	10"x6"	1000	10"x6"	0.06	0.10	0.00	34	340	28	2
AD-6	SUPPLY AIR	DRUM LOUVER	STEEL	40"x12"	500	40"x12"	0.01	0.08	0.00	67	1525	17	
AD-7	EXHAUST AIR	SIDEWALL	STEEL	12"x10"	600	12"x10"	0.02	0.00	0.07	0	435	19	4
AD-8	EXHAUST AIR	SIDEWALL	STEEL	14"x6"	600	14"x6"	0.02	0.00	0.07	0	500	18	4
AD-9	EXHAUST AIR	CEILING MOUNTED	STEEL	10"	1000	24"x24"	0.06	0.00	0.07	0	545	29	6
AD-10	RETURN	CEILING MOUNTED	STEEL	22"x22"	400	24"x24"	0.01	0.00	0.06	0	1350	20	5
AD-11	RETURN	SIDEWALL	STEEL	34x36	600	36x48	0.03	0.00	0.19	0	6100	45	7

NOTES:
1. BASIS OF DESIGN: TITUS TMS
2. BASIS OF DESIGN: TITUS 111
3. BASIS OF DESIGN: TITUS DL
4. BASIS OF DESIGN: TITUS 23R
5. BASIS OF DESIGN: TITUS PDR
6. BASIS OF DESIGN: TITUS 23R
7. BASIS OF DESIGN TITUS 23R

HYDRONIC SYSTEM CHARACTERISTICS SCHEDULE

SYSTEM	% PROPYLENE GLYCOL BY VOLUME	OPERATING TEMPERATURE (°F)	SYSTEM DESIGN PRESSURE (PSI)	SYSTEM RELIEF VALVE PRESSURE (PSI)	MIN SYSTEM FILL PRESSURE (PSI)
CHILLED WATER	30	42-54	125	100	35
HOT WATER	0	110-140	125	100	35

UNIT HEATER SCHEDULE

MARK	LOCATION	TYPE	AIRFLOW (CFM)	CAPACITY (MBH)	EWT (°F)	LWT (°F)	FLOW (GPM)	PRESSURE DROP (FT)	NOMINAL MOTOR POWER (HP)	FLA	V/HZ/PH
UH-1	MECHANICAL ROOM	HYDRONIC	340	3.8	140	120	0.6	0.1	1/60	0.8	115/60/1

NOTES:
1. BASIS OF DESIGN: MODINE HC 18SB01SA

STATE OF TEXAS
BRANDEN M. SCHNEIDER
129852
LICENSED
PROFESSIONAL ENGINEER
6.24.2021

US Army Corps of Engineers®

MARK	DESCRIPTION	DATE

ISSUE DATE: JUNE 2022
CONTRACT NO.: W912PP-22-R-0021
DESIGNED BY: B. SCHNEIDER
DRAWN BY: A. CLEAR
CHECKED BY: A. FORAN
SUBMITTED BY: E. OLMESS
SIZE: ANSI D
FILENAME: K408-951-M-602

US ARMY CORPS OF ENGINEERS
ALBUQUERQUE
ALBUQUERQUE, NEW MEXICO

JACOBS
JACOBS ENGINEERING GROUP INC.
777 Main Street
Fort Worth, TX 76102

COMBAT RESCUE HELICOPTER SIMULATOR FACILITY
KIRTLAND AIR FORCE BASE (AFB),
BERNALILLO COUNTY, NEW MEXICO

CRH SIMULATOR FACILITY ADAL
MECHANICAL SCHEDULES

SHEET ID
951B
M-602

READY TO ADVERTISE

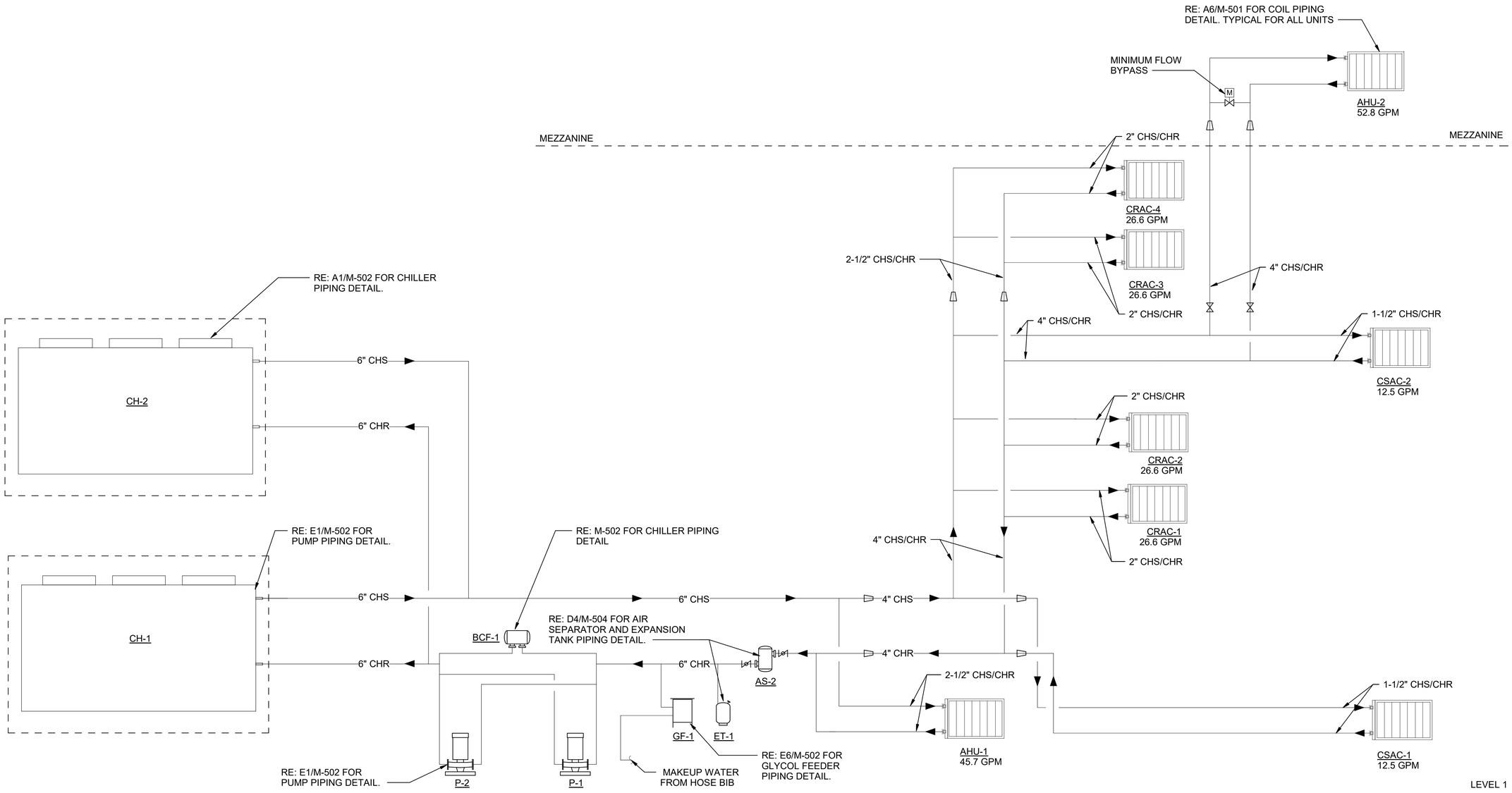

A1 CHILLED WATER FLOW DIAGRAM - PHASE 2

NTS

STATE OF TEXAS
BRANDEN M. SCHNEIDER
129852
LICENSED
PROFESSIONAL ENGINEER
6.24.2021

US Army Corps of Engineers ®

MARK	DESCRIPTION	DATE

ISSUE DATE: JUNE 2022
CONTRACT NO.: W912PP-22-R-0021

DESIGNED BY: B. SCHNEIDER
DRAWN BY: A. CLEAR
CHECKED BY: A. FORAN
SUBMITTED BY: E. OLMESS
SIZE: ANSI D
FILENAME: K-069-951-M-701

US ARMY CORPS OF ENGINEERS
ALBUQUERQUE
ALBUQUERQUE, NEW MEXICO

JACOBS
JACOBS ENGINEERING GROUP INC.
777 Main Street
Fort Worth, Texas 76102

COMBAT RESCUE HELICOPTER SIMULATOR FACILITY
KIRTLAND AIR FORCE BASE (AFB)
BERNALILLO COUNTY, NEW MEXICO

CRH SIMULATOR FACILITY ADAL
CHW FLOW DIAGRAM

SHEET ID
951B
M-701

READY TO ADVERTISE

NOTE:
1. BOILERS ARE SIZED FOR 100% DESIGN CAPACITY.
2. PUMPS ARE SIZED FOR 100% DESIGN FLOW.
3. SYSTEM DESIGN FLOW IS BASED ON BLOCK LOAD AND DOES NOT EQUAL THE TOTAL SUM OF EQUIPMENT FLOWRATES.
4. REFER TO HYDRONIC PIPE RUNOUT SIZING SCHEDULE FOR BRANCH SIZING TO EACH COIL.

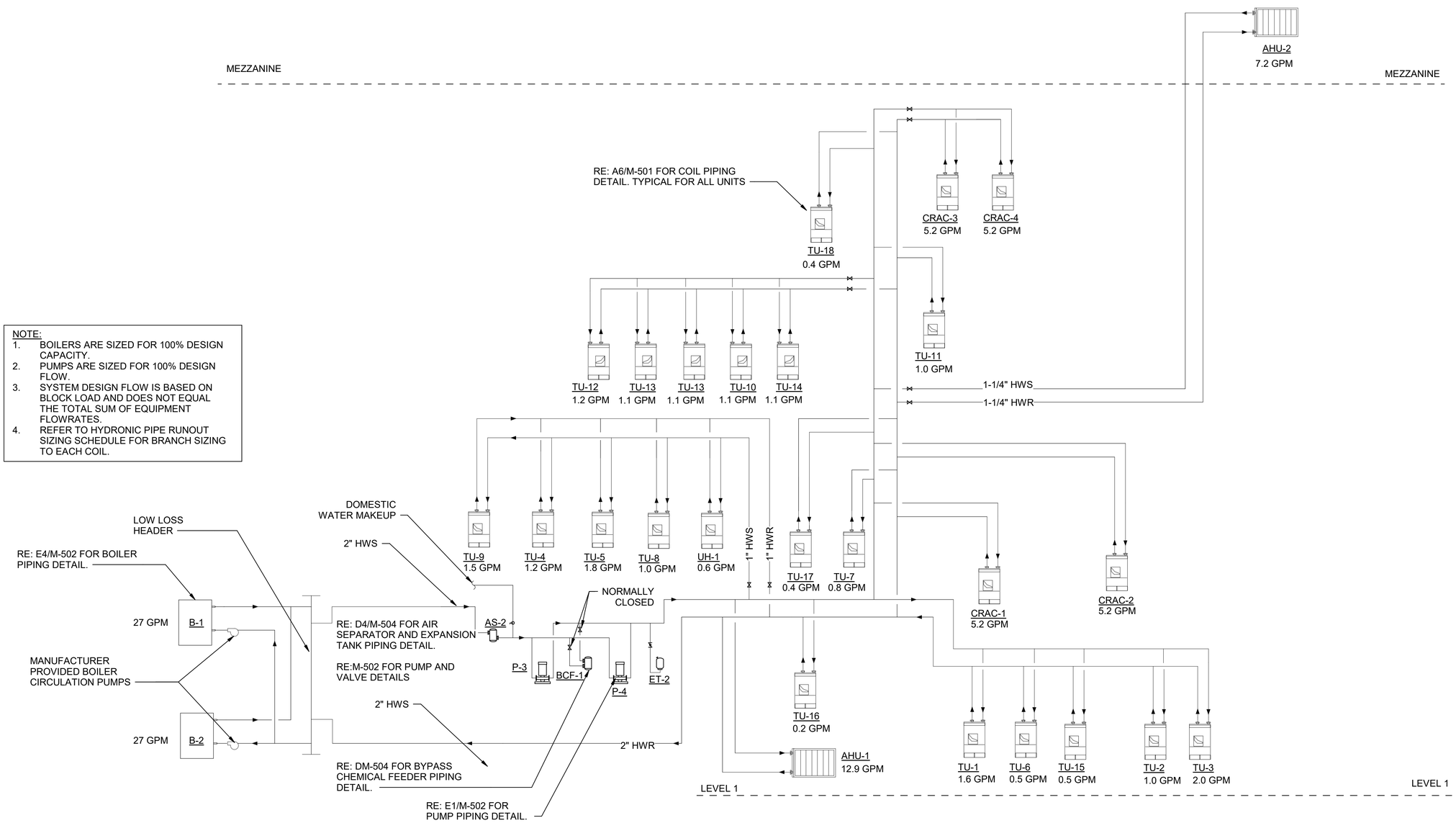

A2 HEATING WATER FLOW DIAGRAM - PHASE 2
NTS

US Army Corps of Engineers ®

MARK	DESCRIPTION	DATE

DESIGNED BY: B. SCHNEIDER
DRAWN BY: A. CLEAR
CHECKED BY: A. FORAN
SUBMITTED BY: E. OLMESS
SIZE: ANSI D
ISSUE DATE: JUNE 2022
CONTRACT NO.: W912PP-22-R-0021
FILENAME: K408-951-M-702

US ARMY CORPS OF ENGINEERS
ALBUQUERQUE
ALBUQUERQUE, NEW MEXICO

JACOBS
JACOBS ENGINEERING GROUP INC.
777 Main Street
Fort Worth, TX 76102

COMBAT RESCUE HELICOPTER SIMULATOR FACILITY
KIRTLAND AIR FORCE BASE (AFB),
BERNALILLO COUNTY, NEW MEXICO

CRH SIMULATOR FACILITY ADAL
HW FLOW DIAGRAM

STATE OF TEXAS
BRANDEN M. SCHNEIDER
129852
LICENSED PROFESSIONAL ENGINEER
6.24.2021

SHEET ID
951B
M-702

READY TO ADVERTISE

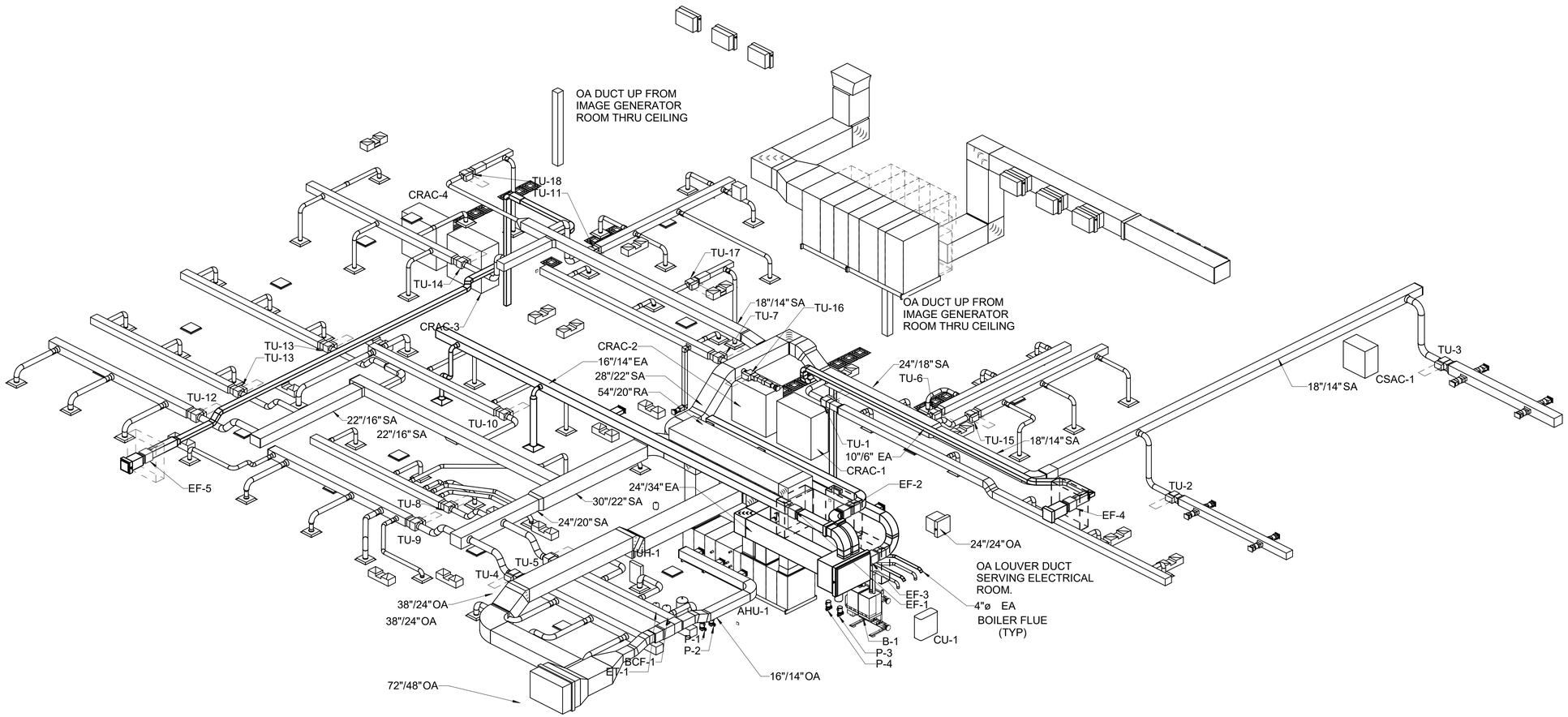

US Army Corps of Engineers ®

MARK	DESCRIPTION	DATE

DESIGNED BY: B. SCHNEIDER
DRAWN BY: A. CLEAR
CHECKED BY: A. FORAN
SUBMITTED BY: E. OLMESS
SIZE: ANSI D
ISSUE DATE: JUNE 2022
CONTRACT NO.: W912PP-22-R-0021
FILENAME: KAB9-951-M-703

US ARMY CORPS OF ENGINEERS
ALBUQUERQUE
ALBUQUERQUE, NEW MEXICO

JACOBS
JACOBS ENGINEERING GROUP INC.
777 Main Street
FORT WORTH, TX 76102

COMBAT RESCUE HELICOPTER SIMULATOR FACILITY
KIRTLAND AIR FORCE BASE (AFB),
BERNALILLO COUNTY, NEW MEXICO

CRH SIMULATOR FACILITY ADAL
AIRFLOW DIAGRAM

STATE OF TEXAS
BRANDEN M. SCHNEIDER
129852
LICENSED
PROFESSIONAL ENGINEER
6.24.2021

SHEET ID
951B
M-703

READY TO ADVERTISE

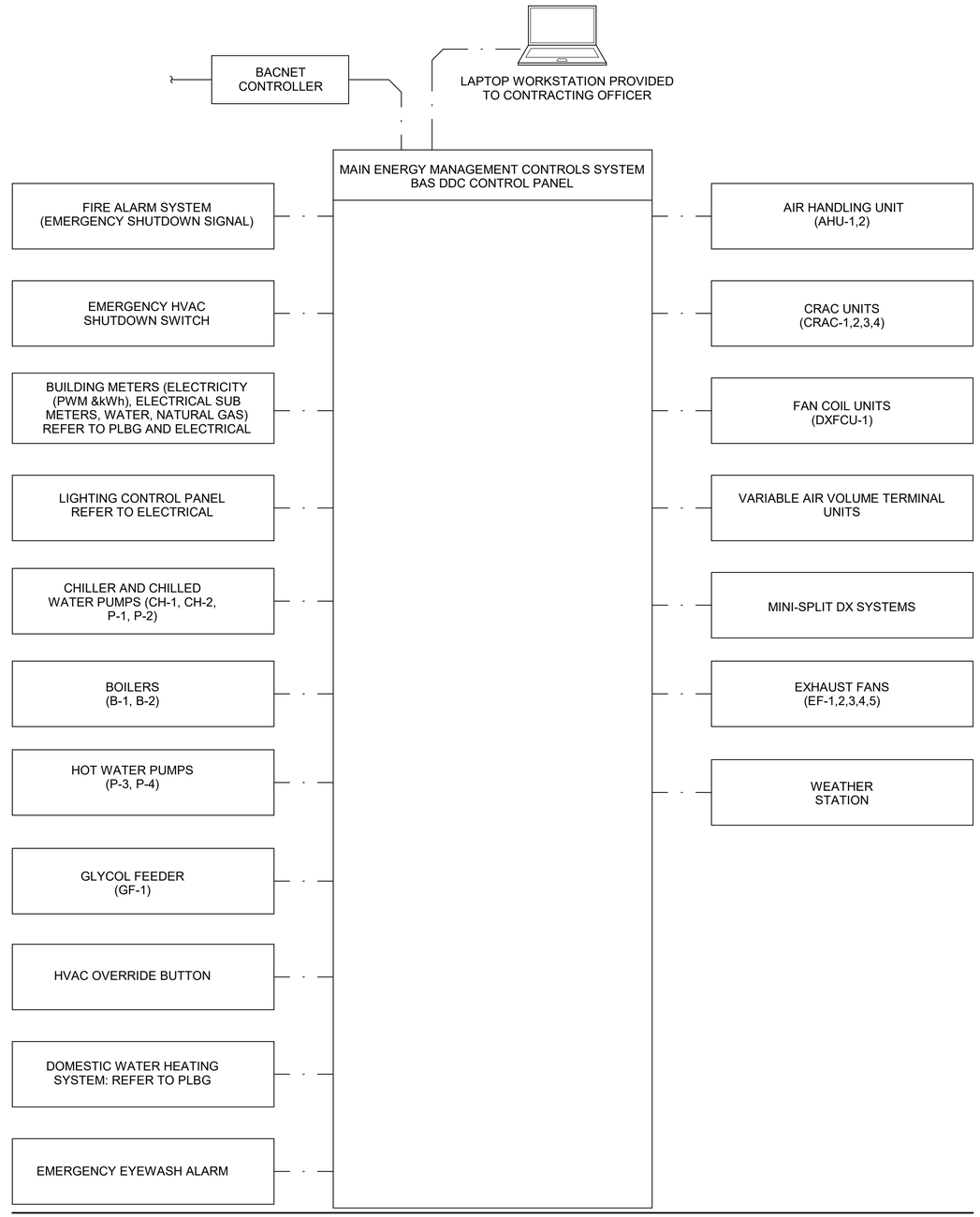

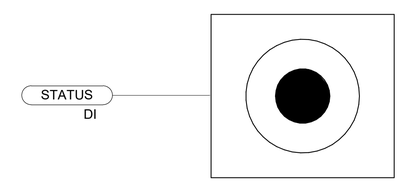

OVERRIDE CONTROL

HVAC OVERRIDE BUTTON CONTROL SEQUENCE

RUN CONDITIONS - NON-SCHEDULED:
A HVAC OVERRIDE BUTTON SHALL BE PROVIDED AS INDICATED ON THE DRAWINGS.

OPERATION MODE:
UPON ACTION OF A HVAC OVERRIDE BUTTON, THAT HVAC SYSTEM SHALL OPERATE AS IN NORMAL OPERATION MODE (SCHEDULED) FOR A TIME INTERVAL OF 4 HOURS (ADJUSTABLE). EQUIPMENT SHALL OPERATE UNDER THEIR CONTROL SEQUENCES TO MAINTAIN SPACE TEMPERATURE. AFTER THE OVERRIDE TIME HAS EXPIRED EQUIPMENT SHALL SHUT DOWN UNDER NORMAL CONTROLS SEQUENCES TO THE OFF POSITION.

STATE OF TEXAS
BRANDEN M. SCHNEIDER
129852
LICENSED PROFESSIONAL ENGINEER
6.24.2021

US Army Corps of Engineers ®

MARK	DESCRIPTION	DATE

DESIGNED BY: B. SCHNEIDER
DRAWN BY: A. CLEAR
CHECKED BY: A. FORAN
SUBMITTED BY: E. OLNESS
SIZE: ANSI D
ISSUE DATE: JUNE 2022
CONTRACT NO.: W912PP-22-R-0021
FILENAME: KA69-951-M-800

US ARMY CORPS OF ENGINEERS
ALBUQUERQUE
ALBUQUERQUE, NEW MEXICO

JACOBS
JACOBS ENGINEERING GROUP INC.
777 Main Street
Fort Worth, Texas 76102

COMBAT RESCUE HELICOPTER SIMULATOR FACILITY
KIRTLAND AIR FORCE BASE (AFB)
BERNALILLO COUNTY, NEW MEXICO

CRH SIMULATOR FACILITY ADAL
CONTROLS

SHEET ID
951B
M-801

READY TO ADVERTISE

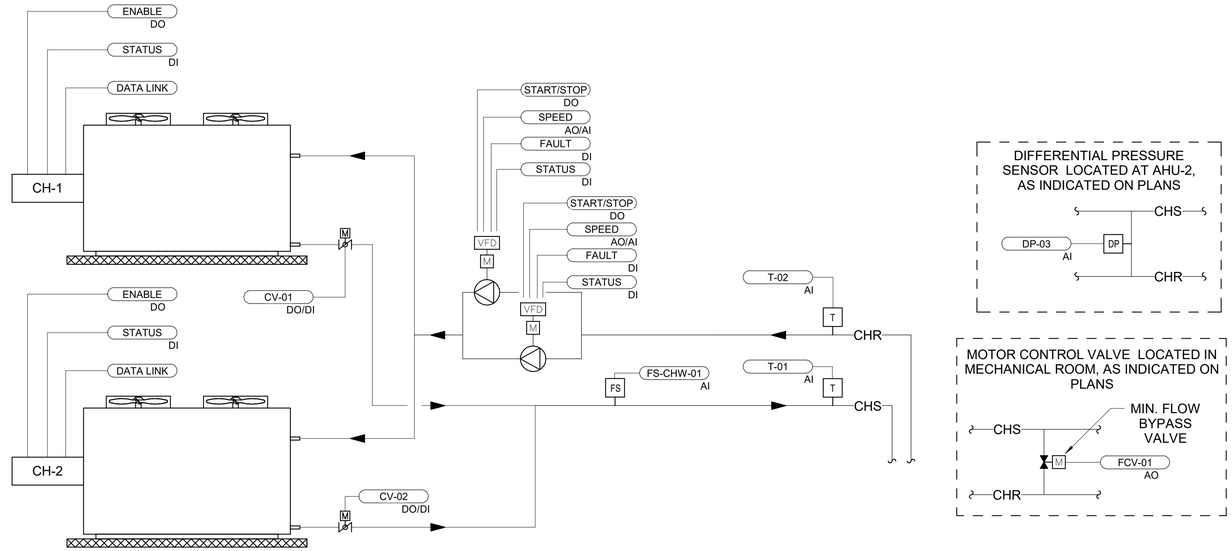

CHILLED WATER SYSTEM - VARIABLE PRIMARY SEQUENCE OF OPERATION

CHILLED WATER SYSTEM:
THE CHILLED WATER SYSTEM CONSISTS OF TWO AIR COOLED CHILLER AND SIZED TO MEET THE BUILDING COOLING LOAD. THE CHILLED WATER SYSTEM'S PUMPING SCHEME IS CONFIGURED WITH A VARIABLE PRIMARY PUMPING SCHEME.

CHILLED WATER SYSTEM RUN CONDITIONS:
THE CHILLED WATER SYSTEM SHALL BE ENABLED TO RUN WHEN ANY OF THE COOLING COIL CONTROL VALVES IS GREATER THAN 20% (ADJUSTABLE) OPEN FOR GREATER THAN 2 MINUTES (ADJUSTABLE) OR BY INITIATION OF CHILLER START SEQUENCE AT EITHER THE NETWORK CONTROLLER OR THE LOCAL CHILLER CONTROL PANEL. THE BUILDING CHILLED WATER SYSTEM SHALL BE DISABLED BY SYSTEM SCHEDULING, OR BY NO AIR HANDLER RUNNING, OR MANUALLY COMMANDED OFF BY THE OPERATOR. TO PREVENT SHORT CYCLING, THE BUILDING CHILLED WATER SYSTEM SHALL RUN FOR AND BE OFF FOR A MINIMUM OF 30 MINUTES (ADJUSTABLE) UNLESS SHUT DOWN ON SAFETIES.

CHILLER OPERATION:
WHEN THE CHILLED WATER SYSTEM IS ENABLED TO OPERATE, THE PUMPS WILL START AND FLOW WILL BE VERIFIED THEN CHILLERS SHALL BE COMMANDED TO START AND SHALL ACTIVATE USING THEIR OWN INTERNAL STARTUP CONTROL SEQUENCE. WHEN THE CHILLED WATER SYSTEM IS DISABLED, THE CHILLERS SHALL BE COMMANDED TO STOP AND SHALL DEACTIVATE USING THEIR OWN INTERNAL SHUTDOWN CONTROL SEQUENCE.

WHEN COOLING LOAD ONLY REQUIRES SINGLE CHILLER TO OPERATE, ROTATE THE DESIGNATION AUTOMATICALLY BASED ON THE FOLLOWING:
1. MANUALLY THROUGH A SOFTWARE SWITCH.
2. CHILLER RUNTIME.
3. SCHEDULING, SUCH AS ROTATING THE SEQUENCE ONCE PER DAY, WEEK, MONTH, SEASON, ETC

WHEN THE CHILLED WATER SYSTEM IS ENABLED TO OPERATE, THE LEAD CHILLER SHALL BE COMMANDED TO START AND SHALL ACTIVATE USING ITS OWN INTERNAL STARTUP CONTROL SEQUENCE. AS PART OF THE STARTUP SEQUENCE, FLOW THROUGH THE UNIT SHALL BE CONFIRMED ABOVE THE UNIT'S MINIMUM FLOW ACCORDING TO THE UNIT'S FLOW SWITCH (FS-01). (MINIMUM FLOW RATE IS PROVIDED BY THE UNIT MANUFACTURER).

THE CHILLER SHALL RUN SUBJECT TO ITS OWN INTERNAL SAFETIES AND CONTROLS. THE CHILLER SHALL LOAD AND UNLOAD AND STAGE COMPRESSORS AS REQUIRED TO MAINTAIN A LEAVING WATER TEMPERATURE OF 44°F (ADJUSTABLE).

PRIOR TO STARTUP, FLOW THROUGH CHILLER SHALL BE VERIFIED (DETECTED AT THE FLOW SENSOR AT THE CHILLER, FS-CHW-01) TO BE ABOVE THE MINIMUM CHILLER FLOW REQUIREMENT.

IN THE CASE OF A SINGLE CHILLER FAILURE, BAS TO COMMAND AHU-1 VALVES TO CLOSE. REMAINING CHILLER TO PRIORITIZE PROVIDING CHILLED WATER TO CRAC UNITS AND CSAC UNITS AND AHU-2 TO ALLOW FOR UNINTERUPTED OPERATION OF SIMULATOR EQUIPMENT.
CHILLER SAFETIES:
THE FOLLOWING SAFETIES SHALL BE MONITORED THROUGH THE BAS:
1. CHILLER ALARM.
2. LOW CHILLER EVAPORATOR FLOW.

ALARMS SHALL BE PROVIDED TO THE BAS OPERATOR INTERFACE AS FOLLOWS:
1. CHILLER FAILURE: COMMANDED ON, BUT THE STATUS IS OFF.
2. CHILLER RUNNING IN HAND: COMMANDED OFF, BUT THE STATUS IS ON.
3. CHILLER ALARM.
4. NO FLOW SIGNAL (FS-CHW-01).
5. LOW EVAPORATOR TEMPERATURE
6. HIGH CONDENSER PRESSURE

CHILLED WATER SYSTEM - PRIMARY PUMP CONTROL:
THE CHILLED WATER PUMPS SHALL BE CONTROLLED VIA A VARIABLE-VOLUME PRIMARY PUMPING SCHEME. THE PUMPS SHALL RUN IN A LEAD/STANDBY CONFIGURATION.

WHEN THE CHILLED WATER SYSTEM IS ENABLED TO OPERATE, THE DESIGNATED CHILLED WATER PUMP SHALL IMMEDIATELY BE STARTED. WHEN THE CHILLED WATER SYSTEM IS DISABLED, THE PUMP SHALL BE STOPPED AFTER A SUITABLE TIME DELAY (INITIAL SETTING: 5 MINUTES, ADJUSTABLE, OR BASED ON A SIGNAL FROM THE CHILLER CONTROL PANEL).

WHEN A PUMP IS COMMANDED TO START IT SHALL BE ENERGIZED AT MINIMUM VFD SPEED THEN RAMP AS REQUIRED BY THE DIFFERENTIAL PRESSURE CONTROL SYSTEM. WHEN A PUMP IS COMMANDED TO STOP IT SHALL FIRST CONTINUE TO RUN FOR A SUITABLE TIME DELAY PERIOD (INITIAL SETTING: 5 MINUTES, ADJUSTABLE), THEN SHALL RAMP TO MINIMUM VFD SPEED THEN BE DEENERGIZED.

CHILLED WATER SYSTEM - VARIABLE PRIMARY SEQUENCE OF OPERATION CONTINUED

THE BAS SHALL HAVE THE CAPABILITY TO DESIGNATE ANY PUMP AS LEAD OR LAG AS DESIRED AND TO ROTATE THE SEQUENCE AUTOMATICALLY BASED ON THE FOLLOWINGS:
1. MANUALLY THROUGH A SOFTWARE SWITCH.
2. PUMP RUNTIME.
3. SCHEDULING, SUCH AS ROTATING THE SEQUENCE ONCE PER DAY, WEEK, MONTH, SEASON, ETC.

THE CONTROLLER SHALL MONITOR THE BUILDING DIFFERENTIAL PRESSURES AT REMOTE SENSORS (DP-03) AND VARY THE PUMP'S VFD SPEED TO MAINTAIN THE DIFFERENTIAL PRESSURE SETPOINT OF EACH SENSOR TO A MINIMUM OF 5 PSIG (ADJUSTABLE, FOR EACH SENSOR) (THE FINAL SET POINT TO BE DETERMINED DURING TEST AND BALANCE). ON A DROP IN DIFFERENTIAL PRESSURE, THE PUMP SPEED SHALL BE APPROPRIATELY INCREASED. ON A RISE IN SYSTEM DIFFERENTIAL PRESSURE, THE PUMP SPEED SHALL BE APPROPRIATELY DECREASED. THE PUMP VFD SHALL BE DECREASED TO THE MINIMUM AS INDICATED BY THE PUMP AND VFD MANUFACTURER.

IF THE PUMP FAILS FOR ANY REASON IT SHALL BE STOPPED. PUMP FAILURE SHALL BE DETERMINED BY AT LEAST ANY ONE OF THE FOLLOWING:
1. PUMP COMMANDED ON BUT STATUS IS OFF
2. LOSS OF SYSTEM FLOW (DETECTED AT FLOW SENSOR, FS-CHW-01).

ALARMS SHALL BE PROVIDED AS FOLLOWS:
1. CHILLED WATER PUMP FAILURE: COMMANDED ON, BUT THE STATUS IS OFF.
2. CHILLED WATER PUMP RUNNING IN HAND: COMMANDED OFF, BUT THE STATUS IS ON.
3. CHILLED WATER PUMP RUNTIME EXCEEDED: STATUS RUNTIME EXCEEDS A USER DEFINABLE LIMIT.

MINIMUM FLOW BYPASS:
FLOW SHALL BE MEASURED THROUGH THE CHILLERS AND AS THE CHILLED WATER FLOW DROPS BELOW SETPOINT, MINIMUM FLOW BYPASS VALVE (FCV-01) TO MODULATE OPEN TO MAINTAIN MINUMUM FLOW THROUGH CHILLERS.

ALARMS SHALL BE PROVIDED AS FOLLOWS
1. FLOW THROUGH CHILLER IS 25% (ADJ) LESS THAN SETPOINT

CHILLER STAGING
IF SINGLE CHILLER IS ACTIVATE AND THE FOLLOWING OCCURS
1. MAXIMUM DESIGN FLOW THROUGH CHILLER
2. LEADER CHILLER IS 95% LOADED

SECOND CHILLER SHALL BE ACTIVATED. ALL RUNNING CHILLERS TO BE LOADED AND UNLOADED AS NECESSARY TO MAINTAIN CHW TEMPERATURES

BUILDING CHILLED WATER TEMPERATURE CONTROL:
THE BUILDING CHILLED WATER TEMPERATURE SETPOINT SHALL BE MAINTAINED BY THE CHILLER'S OWN INTERNAL CONTROLS.

THE FOLLOWING TEMPERATURES SHALL BE MONITORED:
1. CHILLED WATER SUPPLY (T-01).
2. CHILLED WATER RETURN (T-02).

ALARMS SHALL BE PROVIDED AS FOLLOWS:
1. BUILDING HIGH CHILLED WATER SUPPLY TEMP: IF GREATER THAN 42°F (ADJUSTABLE).
2. BUILDING LOW CHILLED WATER SUPPLY TEMP: IF LESS THAN 40°F (ADJUSTABLE).

CHILLER FREEZE PROTECTION:
WHEN THE OUTSIDE AIR TEMPERATURE IS BELOW 40°F (ADJUSTABLE), THE CHILLER'S CONTROLLER SHALL ENABLE THE EVAPORATOR BARREL FREEZE PROTECTION.

SHUTDOWN:
WHEN THE SYSTEM IS COMMANDED TO SHUT DOWN, THE EQUIPMENT SHALL BE ALIGNED AS FOLLOWS:
CHILLER - DISABLED, CHILLED WATER PUMPS - OFF, MINIMUM FLOW BYPASS - OPEN.

STATE OF TEXAS
BRANDEN M. SCHNEIDER
129852
LICENSED
PROFESSIONAL ENGINEER
6.24.2021

A1 CHILLED WATER SYSTEM - VARIABLE PRIMARY CONTROL DIAGRAM & SEQUENCE
SCALE NTS

US Army Corps of Engineers ®

MARK	DESCRIPTION	DATE

ISSUE DATE: JUNE 2022
CONTRACT NO.: W912PP-22-R-0021
DESIGNED BY: B. SCHNEIDER
DRAWN BY: A. CLEAR
CHECKED BY: A. FORAN
SUBMITTED BY: E. OLNESS
SIZE: ANSI D
FILENAME: K469-951-1M-801

US ARMY CORPS OF ENGINEERS
ALBUQUERQUE
ALBUQUERQUE, NEW MEXICO

JACOBS
JACOBS ENGINEERING GROUP INC.
777 Main Street
Fort Worth, TX 76102

COMBAT RESCUE HELICOPTER SIMULATOR FACILITY
KIRTLAND AIR FORCE BASE (AFB),
BERNALILLO COUNTY, NEW MEXICO
CRH SIMULATOR FACILITY ADAL
CONTROLS

SHEET ID
951B
M-802

READY TO ADVERTISE

SEQUENCE OF OPERATION:

GENERAL:
THE HEATING WATER SYSTEM SHALL SERVE HOT WATER TO THE HYDRONIC HEATING COILS. THE SYSTEM CONSISTS OF 2 CONDENSING BOILERS OPERATING IN A LEAD-LAG CONFIGURATION (B-1 & B-2). THE SYSTEM EMPLOYS A PRIMARY SECONDARY PUMPING SCHEME.

SHARED POINTS
1. HOT WATER TEMPERATURE CONTROL VALVE POSITION FROM THE UNIT HEATERS AND THE HYDRONIC HEATING COILS.

RUN CONDITIONS:
THE HEATING WATER SYSTEM SHALL BE ENABLED TO RUN WHEN ONE OF THE FOLLOWING CONDITIONS ARE MET:
1. A MINIMUM OF THREE (ADJUSTABLE) TERMINAL UNITS OR ONE AIR HANDLING COIL HOT WATER CONTROLLERS CALL FOR HEATING AND THEIR RESPECTIVE CONTROL VALVES ARE GREATER THAN 20% (ADJUSTABLE) OPEN FOR GREATER THAN 3 MINUTES (ADJUSTABLE).
2. ANY 3 (ADJUSTABLE) VALVES FOR UNIT HEATERS AND TERMINAL UNITS CALL FOR HEATING AND ITS RESPECTIVE CONTROL VALVE IS GREATER THAN 20% (ADJUSTABLE) OPEN FOR GREATER THAN 3 MINUTES (ADJUSTABLE).
3. ACTIVATED BY DDC SYSTEM SCHEDULING.
4. INITIATION OF BOILER START SEQUENCE AT THE BAS WORKSTATION OR THE NETWORK CONTROLLER OR THE LOCAL BOILER CONTROL PANEL.

THE HEATING WATER SYSTEM SHALL BE DISABLED BY THE DDC SYSTEM WHEN ONE OF THE FOLLOWING CONDITIONS ARE MET:
1. NO HOT WATER CONTROLLERS ARE CALLING FOR HEATING.
2. DEACTIVATED BY DDC SYSTEM SCHEDULING.
3. MANUALLY COMMANDED BY THE OPERATOR.

TO PREVENT SHORT CYCLING, THE BUILDING HEATING WATER SYSTEM SHALL RUN FOR AND BE OFF FOR A MINIMUM TIME OF 30 MINUTES (ADJUSTABLE) UNLESS SHUT DOWN ON SAFETIES. THE BUILDING HEATING WATER SYSTEM SHALL BE AUTOMATICALLY ACTIVATED FOR FREEZE PROTECTION WHENEVER THE OUTSIDE AIR TEMPERATURE IS LESS THAN 35°F (ADJUSTABLE).

BOILER OPERATION:
WHEN THE HEATING WATER SYSTEM IS ENABLED TO OPERATE, THE LEAD BOILER SHALL BE COMMANDED TO START AND SHALL ACTIVATE USING ITS OWN INTERNAL STARTUP CONTROL SEQUENCE. UPON ACTIVATION OF THE BOILER, THE ASSOCIATED CONTROL VALVE (CV-01.X) SHALL BE COMMANDED OPEN. AS PART OF THE STARTUP SEQUENCE FOR ANY BOILER, FLOW THROUGH THE BOILER SHALL BE VERIFIED (DETECTED AT THE FLOW SWITCH AT THE BOILER, FS-01.X) TO BE ABOVE THE MINIMUM BOILER FLOW REQUIREMENT (AS PROVIDED BY THE BOILER MANUFACTURER).

THE BOILERS SHALL RUN SUBJECT TO THEIR OWN INTERNAL SAFETIES AND CONTROLS. THE BOILERS SHALL VARY THEIR LEVEL OF FIRE AS REQUIRED TO MAINTAIN THE LEAVING WATER TEMPERATURE AS INDICATED IN THE BOILER SUPPLY WATER TEMPERATURE (RESETABLE AS NOTED BELOW).

THE BOILERS SHALL BE CONTROLLED IN A LEAD-LAG OPERATION. ONE BOILER SHALL BE DESIGNATED AS THE LEAD UNIT. THE BAS SHALL DESIGNATE WHICH LAG BOILER SHALL BE ENABLED FIRST. THE BAS SHALL HAVE THE CAPABILITY TO DESIGNATE ANY BOILER AS LEAD OR LAG AS DESIRED AND TO ROTATE THE SEQUENCE AUTOMATICALLY BASED ON THE FOLLOWING:
1. MANUALLY THROUGH A SOFTWARE SWITCH.
2. BOILER RUNTIME.
3. SCHEDULING, SUCH AS ROTATING THE SEQUENCE ONCE PER DAY, WEEK, MONTH, SEASON, ETC.

THE MANUFACTURER SUPPLIED BOILER SEQUENCER SHALL ENABLE, MODULATE, AND DISABLE THE BOILERS TO OPERATE THEM BY THE MOST EFFICIENT MEANS POSSIBLE BY MONITORING BOILER FIRE RATE, SYSTEM FLOW RATE, AND WATER TEMPERATURES.

THE BAS SHALL ENABLE/DISABLE THE BOILERS AND MONITOR AVAILABLE BOILER CONTROL POINTS THROUGH A BACNET INTERFACE CARD FURNISHED BY THE BOILER MANUFACTURER.

EMERGENCY BOILER SHUTOFF SWITCH TO BE PROVIDED BY MECHANICAL ROOM DOOR. ACTIVIATION OF THE SWITCH TO IMMEDIATELY SHUTOFF BOILERS ACCORDING TO INTERNAL SAFETIES AND CONTROLS.

WHEN THE HEATING WATER SYSTEM IS DISABLED, BOILERS SHALL BE COMMANDED TO STOP IN SEQUENCE AND SHALL DEACTIVATE USING THEIR OWN INTERNAL SHUTDOWN CONTROL SEQUENCE. IF ALL BOILERS ARE RUNNING WHEN THE HEATING WATER SYSTEM IS DISABLED, THE LAG BOILERS SHALL BE SHUTDOWN IN ORDER FIRST, THEN THE LEAD BOILER SHALL BE SHUTDOWN.

THE BOILER MANUFACTURER REPRESENTATIVE SHALL PROVIDE INFORMATION TO THE BAS PROVIDER TO ASSURE THAT THE SEQUENCE OF OPERATION IS COMPLETELY DEFINED SO THAT ACTIVATION OR DEACTIVATION OF A LAG BOILER DOES NOT SUFFICIENTLY IMBALANCE FLOW THROUGH THE LEAD BOILER SO AS TO CAUSE THE LEAD BOILER TO TRIP OFFLINE. IN ADDITION TO THE SEQUENCE OF OPERATION ABOVE, EMPLOY ADDITIONAL STRATEGIES SUCH AS:
1. REDUCE LEAD BOILER LOAD SLOWLY BEFORE ACTIVATING THE LAG BOILER.
2. ANY OTHER STRATEGIES ACCEPTABLE TO THE BOILER MANUFACTURER. THE INTENT IS FOR LAG BOILERS ACTIVATION AND DEACTIVATION TO BE DONE IN A STABLE MANNER.

BOILER SAFETIES:
THE FOLLOWING SAFETIES SHALL BE MONITORED THROUGH THE BAS:
1. BOILER ALARM.
2. LOW WATER LEVEL.

ALARMS SHALL BE PROVIDED AS FOLLOWS:
1. BOILER ALARM.
2. LOW WATER LEVEL ALARM.
3. NO FLOW SIGNAL.
4. HIGH DIFFERENTIAL PRESSURE ACROSS BOILER.

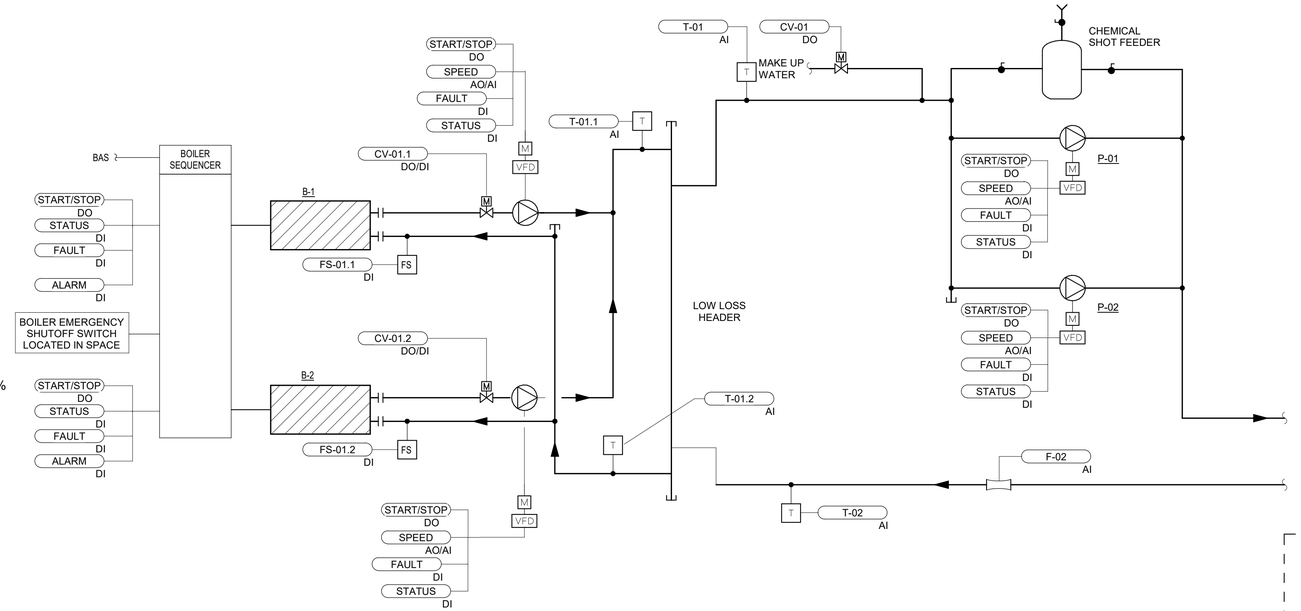

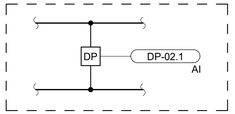

REFER TO PLANS FOR LOCATION AND QUANTITY

BUILDING HEATING WATER SYSTEM - SECONDARY PUMP CONTROL
THE SECONDARY HEATING WATER PUMPS SHALL BE CONTROLLED AS A LEAD-STANDBY OPERATING PAIR. ONE PUMP SHALL BE DESIGNATED AS THE PRIMARY UNIT TO SERVE THE HEATING WATER LOAD. THE BAS OPERATOR SHALL HAVE THE CAPABILITY TO DESIGNATE EITHER PUMP AS PRIMARY OR STANDBY AS DESIRED AND ROTATE THE SEQUENCE AUTOMATICALLY BASED ON SCHEDULING, SUCH AS ROTATING THE SEQUENCE ONCE A WEEK.

WHEN THE HEATING WATER SYSTEM IS ENABLED TO OPERATE, THE LEAD SECONDARY HEATING WATER PUMP SHALL IMMEDIATELY BE STARTED. WHEN THE HEATING WATER SYSTEM IS DISABLED, ALL PUMPS SHALL BE STOPPED AFTER A SUITABLE TIME DELAY (INITIAL SETTING: 5 MINUTES, ADJUSTABLE, OR BASED ON A SIGNAL FROM THE BOILER CONTROL PANEL THROUGH THE BAS).

IF THE LEAD PUMP FAILS FOR ANY REASON IT SHALL BE STOPPED AND THE STANDBY PUMP SHALL BE IMMEDIATELY STARTED. PUMP FAILURE SHALL BE
DETERMINED BY AT LEAST ANY ONE OF THE FOLLOWING:
1. PUMP COMMANDED ON BUT STATUS IS OFF (BASED ON CURRENT SENSOR IN THE VFD).
2. LOSS OF SYSTEM FLOW (DETECTED AT EITHER THE FLOW SENSOR AT EITHER BOILER).
3. INABILITY TO MAINTAIN SYSTEM DIFFERENTIAL PRESSURE (AT DIFFERENTIAL PRESSURE SENSOR).

WHEN A LEAD PUMP IS COMMANDED TO START IT SHALL BE ENERGIZED AT MINIMUM VFD SPEED THEN RAMP AS REQUIRED BY THE DIFFERENTIAL PRESSURE CONTROL SYSTEM. WHEN A STANDBY PUMP IS COMMANDED TO START IT SHALL BE ENERGIZED AT MINIMUM VFD SPEED THEN RAMP AS REQUIRED BY THE DIFFERENTIAL PRESSURE CONTROL SYSTEM. WHEN A LEAD OR STANDBY PUMP IS COMMANDED TO STOP IT SHALL FIRST CONTINUE TO RUN FOR A SUITABLE TIME DELAY PERIOD (INITIAL SETTING: 5 MINUTES, ADJUSTABLE, OR PER BOILER MANUFACTURERS RECOMMENDATION, OR UNTIL RECEIPT OF A STOP SIGNAL FROM THE BOILER CONTROL PANEL THROUGH THE BAS), THEN SHALL RAMP TO MINIMUM VFD SPEED THEN BE DEENERGIZED.THE HEATING WATER SYSTEM DIFFERENTIAL PRESSURE SENSOR SHALL MONITOR AND CONTROL SYSTEM DIFFERENTIAL PRESSURE BY MODULATING THE HEATING WATER PUMP SPEED AS REQUIRED TO MAINTAIN THE "SYSTEM DIFFERENTIAL PRESSURE SETPOINT" (AT SENSOR DP-02.1, INITIAL SETPOINT OF 10 PSIG; ADJUSTABLE; FINAL SETPOINT TO BE DETERMINED DURING TEST AND BALANCE). ALARMS SHALL BE PROVIDED AS FOLLOWS:

1. SECONDARY HEATING WATER PUMP FAILURE: COMMANDED ON, BUT THE STATUS IS OFF.
2. SECONDARY HEATING WATER PUMP RUNNING IN HAND: COMMANDED OFF, BUT THE STATUS IS ON.
3. SECONDARY HEATING WATER PUMP RUNTIME EXCEEDED: STATUS RUNTIME EXCEEDS A USER DEFINABLE LIMIT.
4. VFD FAULT.
5. HIGH HEATING WATER DIFFERENTIAL PRESSURE: IF THE HEATING WATER DIFFERENTIAL PRESSURE IS 25% (ADJUSTABLE) GREATER THAN SETPOINT.
6. LOW HEATING WATER DIFFERENTIAL PRESSURE: IF THE HEATING WATER DIFFERENTIAL PRESSURE IS 25% (ADJUSTABLE) LESS THAN SETPOINT.

WHEN THE LEAD PUMP'S VFD IS AT 95% MAXIMUM FLOWRATE, THE LAG PUMP SHALL BE ENABLED AND RAMPED TO MINIMUM SPEED. THE LEAD PUMP & LAG PUMP VFD'S SHALL BE RAMPED TO MEET AT THE SAME OPERATING SPEED THEN OPERATE IN UNISON TO MAINTAIN THE SYSTEM DIFFERENTIAL PRESSURE. IF THE PUMPS ARE OPERATING AT MINIMUM SPEED FOR 5 MINUTES (ADJUSTABLE), THE LAG PUMP SHALL BE DISABLED AND ITS VFD SLOWLY RAMPED DOWN. WHILE THE LAG PUMP RUNS THROUGH ITS SHUT DOWN, THE OTHER OPERATING PUMP VFD SHALL MODULATE TO MAINTAIN SYSTEM DIFFERENTIAL PRESSURE.

FAILURE ALARMS: PUMPS SHALL BE COMMANDED OFF. AN ALARM SHALL BE PROVIDED TO THE BAS OPERATOR INTERFACE AS FOLLOWS:
1. SYSTEM FAILURE: IF ALL PUMPS FAIL TO START, THE BAS SHALL REMOVE THE HYDRONIC HEATING SYSTEM START COMMAND.
2. FAILURE: COMMANDED ON, BUT THE STATUS IS OFF.
3. RUNNING IN HAND: COMMANDED OFF, BUT THE STATUS IS ON.
4. VFD FAULT.

NON-FAILURE ALARMS: PUMPS SHALL NOT BE COMMANDED OFF. AN ALARM SHALL BE PROVIDED TO THE BAS OPERATOR INTERFACE AS FOLLOWS:
1. RUNTIME EXCEEDED: STATUS RUNTIME EXCEEDS A USER DEFINABLE LIMIT.

DIFFERENTIAL PRESSURE RESET:
THE DIFFERENTIAL PRESSURE SETPOINTS SHALL BE RESET DOWN TO MAINTAIN A MAXIMUM OF 1 (ADJUSTABLE) HOT WATER TEMPERATURE CONTROL VALVE FROM ANY MECHANICAL SYSTEM/UNIT AT A MAXIMUM OF 90% (ADJUSTABLE) OPEN. AS MORE CONTROL VALVES OPEN THE DIFFERENTIAL PRESSURE SETPOINTS SHALL RESET UP TO A MAXIMUM OF 90% OPEN.

A6 HEATING HOT WATER CONTROL DIAGRAM & SEQUENCE
SCALE NTS

STATE OF TEXAS
BRANDEN M. SCHNEIDER
129852
LICENSED
PROFESSIONAL ENGINEER
6.24.2021

US Army Corps of Engineers ®

MARK	DESCRIPTION	DATE

ISSUE DATE: JUNE 2022
CONTRACT NO.: W912PP-22-R-0021
DESIGNED BY: B. SCHNEIDER
DRAWN BY: A. CLEAR
CHECKED BY: A. FORAN
SUBMITTED BY: E. OLNESS
SIZE ANSI D
FILENAME: KA86-951-M-802

US ARMY CORPS OF ENGINEERS
ALBUQUERQUE
ALBUQUERQUE, NEW MEXICO

JACOBS
JACOBS ENGINEERING GROUP INC.
777 Main Street
Fort Worth, TX 76102

COMBAT RESCUE HELICOPTER SIMULATOR FACILITY
KIRTLAND AIR FORCE BASE (AFB),
BERNALILLO COUNTY, NEW MEXICO
CRH SIMULATOR FACILITY ADAL
CONTROLS

SHEET ID
951B
M-803

READY TO ADVERTISE

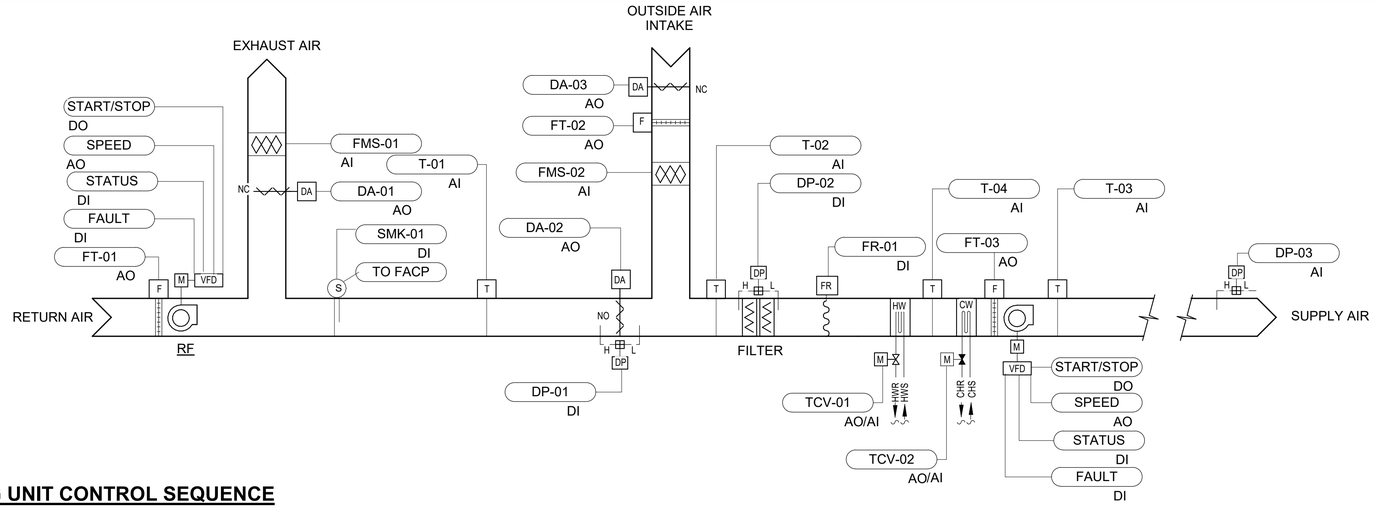

AIR HANDLING UNIT CONTROL SEQUENCE

RUN CONDITIONS - SCHEDULED:
EACH UNIT FAN WILL RUN AS DEFINED BY THE BAS OPERATOR FOR OCCUPIED OR UNOCCUPIED HOURS CONSISTENT WITH THE BUILDING'S OPERATING SCHEDULE. THE SUPPLY FAN WILL RUN ANYTIME THE UNIT IS COMMANDED TO RUN, UNLESS SHUTDOWN ON SAFETIES. TO PREVENT SHORT CYCLING, THE SUPPLY FAN AND RELIEF FAN WILL HAVE A USER DEFINABLE MINIMUM RUNTIME OF 30 MINUTES (ADJUSTABLE). THE BAS WILL ALLOW THE UNIT TO BE PROGRAMMED FOR START AND STOP BASED ON A USER DEFINABLE SCHEDULE UNIQUE TO EACH DAY OF THE WEEK (SUNDAY THROUGH SATURDAY).

UNIT START:
THE UNIT SHALL EMPLOY AN OPTIMAL START STRATEGY AND SHALL START PRIOR TO SCHEDULED OCCUPANCY BASED ON THE TIME NECESSARY FOR THE ZONES TO REACH THEIR OCCUPIED SETPOINTS. THE START TIME SHALL AUTOMATICALLY ADJUST BASED ON CHANGES IN OUTSIDE AIR TEMPERATURE AND ZONE TEMPERATURES. WHEN THE BAS CALLS FOR THE UNIT TO START, THE FOLLOWING SEQUENCES SHALL BE ACTIVATED:
1. SUPPLY FAN COMMANDED ON.
2. RELIEF FAN COMMANDED OFF.
3. ECONOMIZER OUTSIDE AIR DAMPER (DA-03) CLOSED.
4. HOT WATER PREHEAT CONTROL VALVE (TCV-01) OPEN TO BE IN POSITION AS REQUIRED.
5. CHILLED WATER CONTROL VALVES (TCV-02) MODULATED AS REQUIRED TO MAINTAIN TEMPERATURE SETPOINTS.
6. RELIEF AIR DAMPER (DA-01) CLOSED.

SUPPLY AIR TEMPERATURE SETPOINT CONTROL:
THE BAS WILL MONITOR THE UNIT DISCHARGE AIR TEMPERATURE (T-03) AND MAINTAIN A FIXED SUPPLY AIR TEMPERATURE SETPOINT OF 55°F (ADJUSTABLE).

SUPPLY AIR DUCT STATIC PRESSURE CONTROL (AHU-1 ONLY):
THE BAS WILL MEASURE SUPPLY DUCT STATIC PRESSURE AT A DUCT MOUNTED STATIC PRESSURE SENSOR (DP-03) AND MODULATE THE SUPPLY FAN VFD SPEED TO MINIMIZE THE DUCT STATIC PRESSURE SETPOINT NECESSARY TO MAINTAIN ONE VAV TERMINAL UNIT INLET CONTROL DAMPER AT THE FULL OPEN (MAXIMUM COOLING DEMAND) WITH A TIME-OUT FEATURE (CRITICAL ZONE RESET STRATEGY). THE BAS SHALL ALSO HAVE THE CAPABILITY OF MANUAL STATIC PRESSURE SETPOINT ADJUSTMENT AS A USER OVERRIDE FUNCTION. STATIC PRESSURE CONTROL ALARMS WILL BE PROVIDED AS FOLLOWS:
1. HIGH SUPPLY AIR STATIC PRESSURE: IF THE SUPPLY AIR STATIC PRESSURE IS 25% (ADJUSTABLE) GREATER THAN THE SETPOINT.
2. LOW SUPPLY AIR STATIC PRESSURE: IF THE SUPPLY AIR STATIC PRESSURE IS 25% (ADJUSTABLE) LESS THAN THE SETPOINT.
3. SUPPLY FAN VFD SIGNAL FAULT.

RETURN FAN (RF):
THE RETURN FAN (RF) SHALL OPERATE WHEN OA DAMPER DA-03 IS OPEN. THE RETURN FAN SHALL BE ENERGIZED AND SHALL USE VFD TRACKING TO MODULATE SPEED TO MAINTAIN AIRFLOW AT 1150 CFM (ADJ) LESS THAN SUPPLY FAN. OA DAMPER TO MODULATE TO MAINTAIN OUTSIDE AIRFLOW EQUAL TO MINIMUM OUTSIDE AIRFLOW REQUIREMENT:
1. EXHAUST FAN FAILURE: COMMANDED ON, BUT STATUS IS OFF.
2. EXHAUST FAN IN HAND: COMMANDED OFF, BUT STATUS IS ON.
3. VFD FAULT.

RETURN AIR DIFFERENTIAL PRESSURE MONITOR:
THE RETURN AIR DIFFERENTIAL PRESSURE SWITCH (BLEED VALVE) (DP-01) SHALL MONITOR THE DIFFERENTIAL PRESSURE ACROSS RETURN AIR DAMPER (DA-02). RETURN AIR DAMPER SHALL MODULATE TO MAINTAIN A POSITIVE PRESSURE ACROSS RETURN AIR DIFFERENTIAL PRESSURE SWITCH (DP-01).

ECONOMIZER:
IN THE ECONOMIZER MODE RETURN AIR DAMPER (DA-02) AND OUTDOOR AIR DAMPER (DA-03) SHALL MODULATE TO MAINTAIN A MIXED AIR TEMPERATURE OF 55°F (ADJUSTABLE). IF THE STATUS OF THE DAMPERS IS NOT CONFIRMED AFTER 1 MINUTE (ADJUSTABLE) THEN AN ALARM SHALL BE SENT TO THE BAS AND THE ECONOMIZER MODE SHALL BE DISABLED. ONLY WHEN THE RETURN AIR DAMPER (DA-02) AND OUTDOOR AIR DAMPER (DA-03) ARE NOT ABLE TO MAINTAIN THE DISCHARGE AIR TEMPERATURE THE COOLING COIL VALVE IS TO MAINTAIN THE DISCHARGE AIR TEMPERATURE (T-03) AT 55°F (ADJUSTABLE).
THE ECONOMIZER SHALL BE ENABLED WHENEVER:
1. OUTSIDE AIR TEMPERATURE IS LESS THAN 75°F (ADJUSTABLE).
2. AND THE OUTSIDE AIR DEWPOINT TEMPERATURE IS LESS THAN 55 F (ADJUSTABLE).
3. AND THE SUPPLY FAN STATUS IS ON.
THE ECONOMIZER SHALL BE DISABLED WHENEVER:
1. OUTSIDE AIR TEMPERATURE EXCEEDS 75°F (ADJUSTABLE).
2. OR THE OUTSIDE AIR DEWPOINT TEMPERATURE EXCEEDS 55°F (ADJUSTABLE).
3. OR THE MIXED AIR TEMPERATURE (T-01) IS LESS THAN 55°F (ADJUSTABLE) AND THE ECONOMIZER DAMPER) (DA-03) IS AT MINIMUM POSITION FOR 30 MINUTES (ADJUSTABLE).
4. OR THE FREEZESTAT IS ON.
5. OR ON LOSS OF SUPPLY FAN STATUS.
THE OUTSIDE AND RELIEF AIR DAMPERS SHALL CLOSE WHEN THE UNIT IS OFF.

MIXED AIR TEMPERATURE:
THE BAS WILL MONITOR THE MIXED AIR TEMPERATURE (T-02) AND USE AS REQUIRED FOR COOLING MODE AND PREHEAT MODE CONTROL.

REHEAT CONTROL:
THE CONTROLLER SHALL MONITOR THE MIXED AIR TEMPERATURE (T-02), IF THE MIXED AIR TEMPERATURE DROPS 2˚F (ADJUSTABLE) BELOW THE SUPPLY AIR TEMPERATURE SETPOINT, THE CONTROLLER SHALL MODULATE THE REHEAT COIL'S CONTROL VALVE (TCV-01 TO MAINTAIN THE SUPPLY AIR TEMPERATURE (T-04) TO THE SUPPLY AIR TEMPERATURE SETPOINT (ADJUSTABLE).

COOLING:
THE COOLING CONTROL MODE SHALL BE ENABLED WHENEVER:
1. THE SUPPLY FAN STATUS IS ON;
2. AND THE PREHEAT CONTROL VALVE IS CLOSED.
3. NOT IN ECONOMIZER MODE
THE BAS WILL MONITOR THE SUPPLY AIR TEMPERATURE (T-03) AND MODULATE THE COOLING COIL VALVE (TCV-02) OPEN TO MAINTAIN THE DEFINED COOLING SETPOINT OF 55°F (ADJUSTABLE). THE COOLING COIL VALVE (TCV-02) SHALL OPEN TO 50% (ADJUSTABLE) WHENEVER THE FREEZESTAT IS ON. AN ALARM WILL BE PROVIDED FOR HIGH SUPPLY AIR IF THE SUPPLY AIR TEMPERATURE IS 5°F (ADJUSTABLE) GREATER THAN THE DISCHARGE SETPOINT.

IN THE CASE OF ONLY ONE CHILLER BEING OPERATIONAL, IF CHILLER IS AT OR ABOVE 50% LOAD, AHU CHW COIL CONTROL VALVES TO MODULATE CLOSED TO PRIORITIZE FLOW TO CRAC UNITS AND CSAC UNITS.

SUPPLY AIR TEMPERATURE RESET CONTROL (AHU-1 ONLY):
THE AIR HANDLING UNIT'S SUPPLY AIR TEMPERATURE SETPOINT SHALL BE 55˚F (ADJUSTABLE). IF ALL ZONES GO INTO HEATING MODE, THE AIR HANDLING UNIT SUPPLY AIR TEMPERATURE SET POINT SHALL BE RESET TO 60˚F (ADJUSTABLE). WHEN ONE ZONE IS IN COOLING AND THE ZONE DAMPER IS 85% (ADJUSTABLE) OPEN FOR MORE THAN 5 MINUTES THEN THE SUPPLY AIR TEMPERATURE SHALL BE RESET TO 55˚F (ADJUSTABLE).

FILTER DIFFERENTIAL PRESSURE MONITOR:
THE BAS WILL MONITOR THE DIFFERENTIAL PRESSURE ACROSS THE FILTER BANK. ALARM WILL BE PROVIDED WHEN FILTER DIFFERENTIAL PRESSURE EXCEEDS SETPOINT (ADJUSTABLE).

UNIT SHUTDOWN:
THE UNIT WILL SHUT DOWN IF ONE OF THE FOLLOWING CONDITIONS OCCURS:
1. FREEZESTAT: FREEZESTAT ACTIVATION WHEN HEATING COIL ENTERING AIR TEMPERATURE DROPS BELOW 35°F (ADJUSTABLE).
2. RETURN AIR SMOKE DETECTION: SA SMOKE ALARM UPON DETECTION OF SMOKE IN THE RETURN AIR INTAKE (SMK-01). THE SA SMOKE DETECTOR WILL ALSO ADDRESS THE FIRE ALARM CONTROL PANEL, RE: FIRE PROTECTION.
3. AT/FP EMERGENCY SHUTDOWN: AN EMERGENCY SHUTDOWN SIGNAL FROM A CENTRAL PUSH BUTTON SWITCH WHEN A CHEMICAL OR BIOLOGICAL THREAT IS IMMINENT.
4. SUPPLY FAN: SUPPLY FAN FAILURE ALARM PER THE FOLLOWING:
   a. SUPPLY FAN FAILURE: COMMANDED ON, BUT STATUS IS OFF.
   b. SUPPLY FAN IN HAND: COMMANDED OFF, BUT STATUS IS ON.
   c. VFD FAULT.

UNIT SHUTDOWN SHALL FOLLOW MANUFACTURES SHUTDOWN SEQUENCE AND AT A MINIMUM ALIGN THE UNIT COMPONENTS TO THE FOLLOWING (REFER TO CONTROL DIAGRAM FOR ABBREVIATIONS): SUPPLY FAN (SF) OFF, CHILLED WATER VALVES (TCV-02) CLOSED, HOT WATER VALVE (TCV-01) CLOSED, OUTSIDE AIR DAMPER (DA-03) CLOSED, AND RELIEF AIR DAMPER (DA-01) CLOSED. UPON SHUTDOWN ON ONE OF THE ABOVE FAULT CONDITIONS, THE BAS WILL GENERATE AN ALARM AT THE USER INTERFACE.

A1 AHU-1 CONTROL DIAGRAM & SEQUENCE OF OPERATIONS
NTS

STATE OF TEXAS
BRANDEN M. SCHNEIDER
129852
LICENSED
PROFESSIONAL ENGINEER
6.24.2021

US Army Corps of Engineers ®

MARK	DESCRIPTION	DATE

DESIGNED BY: B. SCHNEIDER
DRAWN BY: A. CLEAR
CHECKED BY: A. FORAN
SUBMITTED BY: E. OLMESS
SIZE: ANSI D
ISSUE DATE: JUNE 2022
CONTRACT NO.: W912PP-22-R-0021
FILENAME: KA89-951-M-803

US ARMY CORPS OF ENGINEERS
ALBUQUERQUE
ALBUQUERQUE, NEW MEXICO

JACOBS
JACOBS ENGINEERING GROUP INC.
777 Main Street
Fort Worth, TX 76102

COMBAT RESCUE HELICOPTER SIMULATOR FACILITY
KIRTLAND AIR FORCE BASE (AFB)
BERNALILLO COUNTY, NEW MEXICO

CRH SIMULATOR FACILITY ADAL
CONTROLS

SHEET ID
951B
M-804

READY TO ADVERTISE

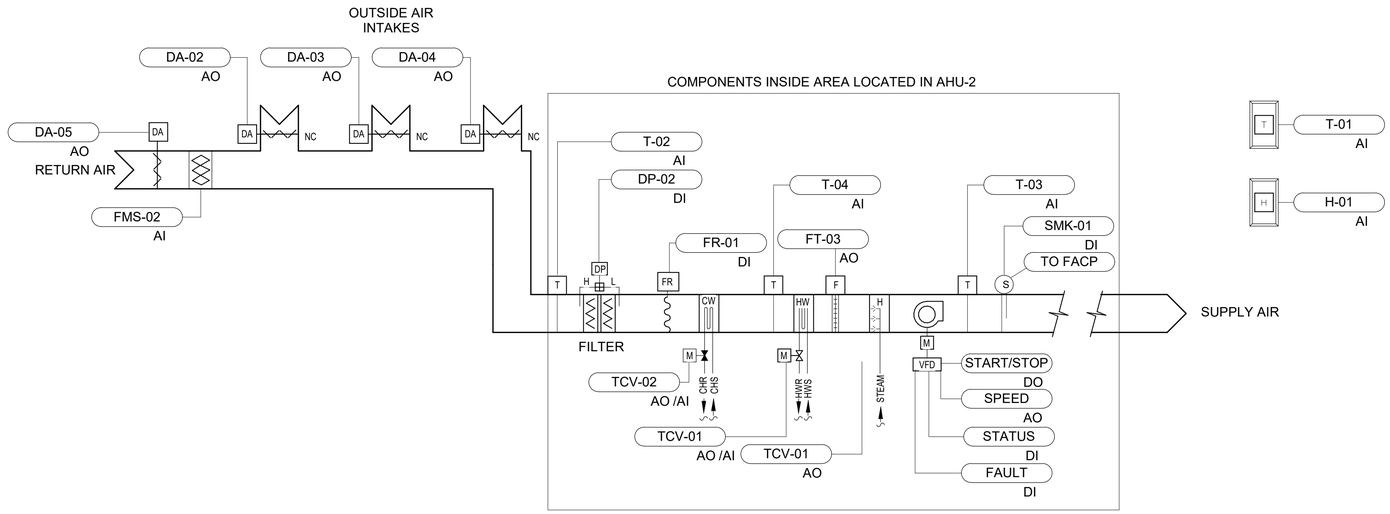

AHU-2 CONTROL SEQUENCE

RUN CONDITIONS - SCHEDULED:
EACH UNIT FAN WILL RUN AS DEFINED BY THE BAS OPERATOR FOR OCCUPIED OR UNOCCUPIED HOURS CONSISTENT WITH THE BUILDING'S OPERATING SCHEDULE. THE SUPPLY FAN WILL RUN ANYTIME THE UNIT IS COMMANDED TO RUN, UNLESS SHUTDOWN ON SAFETIES. TO PREVENT SHORT CYCLING, THE SUPPLY FAN WILL HAVE A USER DEFINABLE MINIMUM RUNTIME OF 30 MINUTES (ADJUSTABLE). THE BAS WILL ALLOW THE UNIT TO BE PROGRAMMED FOR START AND STOP BASED ON A USER DEFINABLE SCHEDULE UNIQUE TO EACH DAY OF THE WEEK (SUNDAY THROUGH SATURDAY).

UNIT START:
THE UNIT SHALL EMPLOY AN OPTIMAL START STRATEGY AND SHALL START PRIOR TO SCHEDULED OCCUPANCY BASED ON THE TIME NECESSARY FOR THE ZONES TO REACH THEIR OCCUPIED SETPOINTS. THE START TIME SHALL AUTOMATICALLY ADJUST BASED ON CHANGES IN OUTSIDE AIR TEMPERATURE AND ZONE TEMPERATURES. WHEN THE BAS CALLS FOR THE UNIT TO START, THE FOLLOWING SEQUENCES SHALL BE ACTIVATED:
1. SUPPLY FAN COMMANDED ON.
2. ECONOMIZER OUTSIDE AIR DAMPERS (DA-03, DA-04) CLOSED.
3. HOT WATER CONTROL VALVE (TCV-01) OPEN TO BE IN POSITION AS REQUIRED.
4. CHILLED WATER CONTROL VALVES (TCV-02) MODULATED AS REQUIRED TO MAINTAIN TEMPERATURE SETPOINTS.

SUPPLY AIR TEMPERATURE SETPOINT CONTROL:
THE BAS WILL MONITOR THE UNIT DISCHARGE AIR TEMPERATURE (T-03) AND MAINTAIN A FIXED SUPPLY AIR TEMPERATURE SETPOINT OF 55°F COOLING AND 88°F HEATING (ADJUSTABLE).

ECONOMIZER:
IN THE ECONOMIZER MODE RETURN AIR DAMPER (DA-05) AND OUTDOOR AIR DAMPES (DA-02, DA-03, DA-04), SHALL MODULATE TO MAINTAIN A LEAVING AIR TEMPERATURE OF 55°F (ADJUSTABLE). OUTSIDE AIR DAMPERS ARE TO OPEN IN STAGES. ASOUTSIDE AIR PERCENTAGE INCREASES OVER 30%, DA-02 IS TO MODULATE OPEN. WHEN OUTSIDE AIR PERCENTAGE INCREASES OVER 60% DA-03 IS TO MODULATE OPEN. IF THE STATUS OF THE DAMPERS IS NOT CONFIRMED AFTER 1 MINUTE (ADJUSTABLE) THEN AN ALARM SHALL BE SENT TO THE BAS AND THE ECONOMIZER MODE SHALL BE DISABLED. ONLY WHEN THE RETURN AIR DAMPER (DA-05) AND OUTDOOR AIR DAMPERS (DA-02, DA-03, DA-04) ARE NOT ABLE TO MAINTAIN THE DISCHARGE AIR TEMPERATURE THE COOLING COIL VALVE IS TO MAINTAIN THE DISCHARGE AIR TEMPERATURE (T-03) AT 55°F (ADJUSTABLE).
THE ECONOMIZER SHALL BE ENABLED WHENEVER:
1. OUTSIDE AIR TEMPERATURE IS LESS THAN 75°F (ADJUSTABLE).
2. AND THE OUTSIDE AIR DEWPOINT TEMPERATURE IS LESS THAN 55 F (ADJUSTABLE).
3. AND THE SUPPLY FAN STATUS IS ON.
THE ECONOMIZER SHALL BE DISABLED WHENEVER:
1. OUTSIDE AIR TEMPERATURE EXCEEDS 75°F (ADJUSTABLE).
2. OR THE OUTSIDE AIR DEWPOINT TEMPERATURE EXCEEDS 55°F (ADJUSTABLE).
3. OR THE MIXED AIR TEMPERATURE (T-01) IS LESS THAN 55°F (ADJUSTABLE) AND THE ECONOMIZER DAMPER) (DA-03) IS AT MINIMUM POSITION FOR 30 MINUTES (ADJUSTABLE).
4. OR THE FREEZESTAT IS ON.
5. OR ON LOSS OF SUPPLY FAN STATUS.
THE OUTSIDE AND RELIEF AIR DAMPERS SHALL CLOSE WHEN THE UNIT IS OFF.

MINIMUM OUTSIDE AIR FLOW
MINIMIUM OUTSIDE AIR DAMPERS SHALL MAINTAIN A MINIMUM ADJUSTABLE POSITION DURING BUILDING OCCUPIED HOURS AND BE CLOSED DURING UNNOCUPIED HOURS. OUTSIDE AIRFLOW TO BE CALCULATED BASED ON THE SUPPLY AIRFLOW MEASURED BY AIRFLOW MEASURING STATION FT-01 MINUS RETURN AIRFLOW DETERMINED BY FMS-01.

MIXED AIR TEMPERATURE:
THE BAS WILL MONITOR THE MIXED AIR TEMPERATURE (T-02).

HEATING:
THE CONTROLLER SHALL MONITOR THE SUPPLY AIR TEMPERATURE (T-03),AND SHALL MAINTAIN THE SPACE IF THE MIXED AIR TEMPERATURE DROPS 2´F (ADJUSTABLE) BELOW THE SUPPLY AIR TEMPERATURE SETPOINT, THE CONTROLLER SHALL MODULATE THE REHEAT COIL'S CONTROL VALVE (TCV-01 TO MAINTAIN THE SUPPLY AIR TEMPERATURE (T-03) TO THE SUPPLY AIR TEMPERATURE SETPOINT (ADJUSTABLE).

COOLING:
THE COOLING CONTROL MODE SHALL BE ENABLED WHENEVER:
1. THE SUPPLY FAN STATUS IS ON;
2. NOT IN ECONOMIZER MODE
THE BAS WILL MONITOR THE SUPPLY AIR TEMPERATURE (T-03) AND MODULATE THE COOLING COIL VALVE (TCV-02) OPEN TO MAINTAIN THE DEFINED COOLING SETPOINT OF 55°F (ADJUSTABLE). THE COOLING COIL VALVE (TCV-02) SHALL OPEN TO 50% (ADJUSTABLE) WHENEVER THE FREEZESTAT IS ON. AN ALARM WILL BE PROVIDED FOR HIGH SUPPLY AIR IF THE SUPPLY AIR TEMPERATURE IS 5°F (ADJUSTABLE) GREATER THAN THE DISCHARGE SETPOINT.

HUMIDIFICATION
THE CONTROLLER SHALL MEASURE HUMIDITY IN THE SPACE AND MODULATE THE HUMIDIFER TO MAINTAIN A SETPOINT OF 30% (ADJ) RELATIVE HUMIDITY. HUMIDIFIER TO BE DISABLED WHEN COOLING COIL IS ACTIVATED.

FILTER DIFFERENTIAL PRESSURE MONITOR:
THE BAS WILL MONITOR THE DIFFERENTIAL PRESSURE ACROSS THE FILTER BANK. ALARM WILL BE PROVIDED WHEN FILTER DIFFERENTIAL PRESSURE EXCEEDS SETPOINT (ADJUSTABLE).

UNIT SHUTDOWN:
THE UNIT WILL SHUT DOWN IF ONE OF THE FOLLOWING CONDITIONS OCCURS:
1. FREEZESTAT: FREEZESTAT ACTIVATION WHEN HEATING COIL ENTERING AIR TEMPERATURE DROPS BELOW 35°F (ADJUSTABLE).
2. RETURN AIR SMOKE DETECTION: SA SMOKE ALARM UPON DETECTION OF SMOKE IN THE RETURN AIR INTAKE (SMK-01). THE SA SMOKE DETECTOR WILL ALSO ADDRESS THE FIRE ALARM CONTROL PANEL, RE: FIRE PROTECTION.
3. AT/FP EMERGENCY SHUTDOWN: AN EMERGENCY SHUTDOWN SIGNAL FROM A CENTRAL PUSH BUTTON SWITCH WHEN A CHEMICAL OR BIOLOGICAL THREAT IS IMMINENT.
4. SUPPLY FAN: SUPPLY FAN FAILURE ALARM PER THE FOLLOWING:
   a. SUPPLY FAN FAILURE: COMMANDED ON, BUT STATUS IS OFF.
   b. SUPPLY FAN IN HAND: COMMANDED OFF, BUT STATUS IS ON.
   c. VFD FAULT.

UNIT SHUTDOWN SHALL FOLLOW MANUFACTURES SHUTDOWN SEQUENCE AND AT A MINIMUM ALIGN THE UNIT COMPONENTS TO THE FOLLOWING (REFER TO CONTROL DIAGRAM FOR ABBREVIATIONS): SUPPLY FAN (SF) OFF, CHILLED WATER VALVES (TCV-02) CLOSED, HOT WATER VALVE (TCV-01) CLOSED, OUTSIDE AIR DAMPER (DA-03) CLOSED, AND RELIEF AIR DAMPER (DA-01) CLOSED. UPON SHUTDOWN ON ONE OF THE ABOVE FAULT CONDITIONS, THE BAS WILL GENERATE AN ALARM AT THE USER INTERFACE.

1 AHU-2 CONTROL DIAGRAM & SEQUENCES OF OPERATIONS
NTS

STATE OF TEXAS
BRANDEN M. SCHNEIDER
129852
LICENSED
PROFESSIONAL ENGINEER
6.24.2021

READY TO ADVERTISE

US Army Corps of Engineers ®

MARK	DESCRIPTION	DATE

DESIGNED BY: B. SCHNEIDER
DRAWN BY: A. CLEAR
CHECKED BY: A. FORAN
SUBMITTED BY:
SIZE: ANSI D
FILENAME:
ISSUE DATE: JUNE 2022
CONTRACT NO.: W912PP-22-R-0021

US ARMY CORPS OF ENGINEERS
ALBUQUERQUE
ALBUQUERQUE, NEW MEXICO

JACOBS
JACOBS ENGINEERING GROUP INC.
777 Main Street
Fort Worth, TX 76102

COMBAT RESCUE HELICOPTER SIMULATOR FACILITY
KIRTLAND AIR FORCE BASE (AFB),
BERNALILLO COUNTY, NEW MEXICO

CRH SIMULATOR FACILITY ADAL
CONTROLS

SHEET ID
M-805

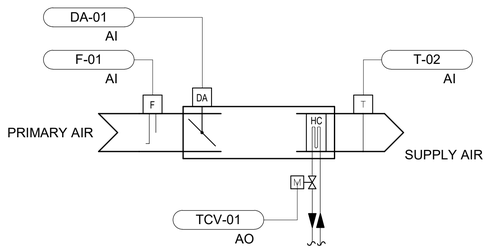

VAV WITH HYDRONIC REHEAT COIL

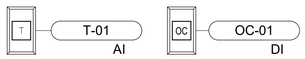

SPACE SENSORS

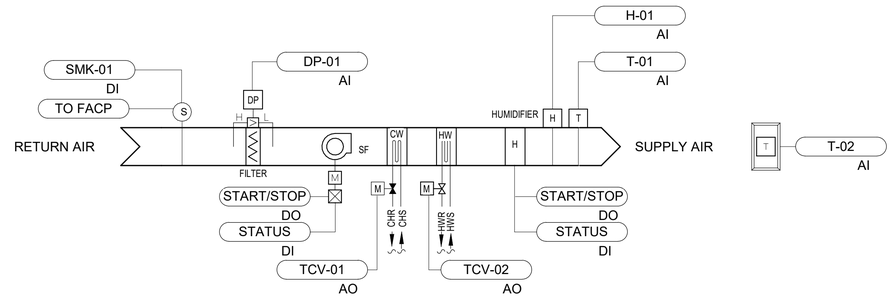

NOTES:
1. REFER TO M-809 FOR I/O POINTS LIST.
2. OCCUPANCY PROVIDED THROUGH THE LIGHTING CONTROL PANEL.

VAV TERMINAL UNIT WITH REHEAT CONTROL SEQUENCE

RUN CONDITIONS - SCHEDULED:
EACH UNIT SHALL RUN ACCORDING TO USER DEFINABLE TIME SCHEDULED (ADJUSTABLE) IN THE FOLLOWING MODES:

SCHEDULED OCCUPIED MODE:
THE UNITS SHALL MAINTAIN ZONE COOLING AND HEATING SETPOINTS AS DEFINED ON M-001.

SCHEDULED UNOCCUPIED MODE (NIGHT SETBACK): THE UNIT SHALL MAINTAIN:
1. 5°F (ADJUSTABLE) ABOVE THE ZONE'S COOLING SETPOINT.
2. 10°F (ADJUSTABLE) BELOW THE ZONE'S HEATING SETPOINT.
3. OCCUPANCY BASED ON VACANCY/OCCUPANCY SENSORS.

ALARMS SHALL BE PROVIDED AS FOLLOWS:
1. HIGH ZONE TEMPERATURE: IF THE ZONE TEMPERATURE IS GREATER THAN THE COOLING SETPOINT BY 5°F (ADJUSTABLE).
2. LOW ZONE TEMPERATURE: IF THE ZONE TEMPERATURE IS LESS THAN THE HEATING SETPOINT BY 5°F (ADJUSTABLE).
3. HIGH ZONE CO2: IF THE ZONE CARBON DIOXIDE LEVEL IS GREATER THAN 1400 PPM (ADJUSTABLE).

ZONE OPTIMAL START:
THE VAV TERMINAL UNIT IN CONJUNCTION WITH THE AHU SHALL USE AN OPTIMAL START ALGORITHM FOR MORNING START-UP. THIS ALGORITHM SHALL MINIMIZE THE UNOCCUPIED WARM-UP OR COOL-DOWN PERIOD WHILE STILL ACHIEVING COMFORT CONDITIONS BY THE START OF SCHEDULED OCCUPIED PERIOD.

SPACE TEMPERATURE CONTROL:
THE VAV TERMINAL UNITS SHALL MODULATE AIRFLOW FOR COMFORT COOLING AND HEATING TO MEET THE SCHEDULED OCCUPIED & UNOCCUPIED SET POINTS BY THE FOLLOWING:
1. WHEN THE ZONE TEMPERATURE IS GREATER THAN ITS COOLING SETPOINT, THE ZONE DAMPER SHALL MODULATE BETWEEN THE MINIMUM AIRFLOW (ADJUSTABLE) AND MAXIMUM AIRFLOW (ADJUSTABLE) UNTIL THE ZONE IS SATISFIED.
2. WHEN THE ZONE TEMPERATURE IS BETWEEN THE COOLING SETPOINT AND THE HEATING SETPOINT, THE DAMPER SHALL BE AT ITS MINIMUM POSITION.
3. WHEN THE ZONE TEMPERATURE IS LESS THAN ITS HEATING SETPOINT:
   - 3.1 AT THE 1ST STAGE OF HEATING, THE CONTROLLER SHALL MODULATE THE ZONE HEATING CONTROL VALVE (TCV-01) TO MAINTAIN THE ZONE TEMPERATURE SETPOINT WHILE MAINTAINING THE ZONE MINIMUM HEATING AIRFLOW ABOVE 10°F ABOVE ROOM SETPOINT.
   - 3.2 AT THE 2ND STAGE OF HEATING WHEN THE VAV BOXES LEAVING AIR TEMPERATURE CONTROL VALVE (T-02) REACHES 15°F (ADJUSTABLE) ABOVE ROOM SETPOINT THE CONTROLLER SHALL MODULATE THE ZONE DAMPER 10°F ABOVE ROOM SETPOINT BETWEEN THE MINIMUM AIR FLOW AND THE HEATING AIRFLOW WHILE MAINTAINING A CONSTANT LEAVING AIR TEMPERATURE (T-02) OF 15°F ABOVE ROOM SETPOINT MAXIMUM (ADJUSTABLE).

REWRITE FOR 1ST STAGE: DAMPER TO BE AT MIN % TCV CONTROLS SPACE TEMP 2ND STAGE: KEEPS CONSTANT LAT & MODULATE FLOW RATE TO MEET ROOM SET. WHEN THE OCCUPANCY SENSOR ON THE LIGHTING CONTROL PANEL INDICATES THE ZONE IS UNOCCUPIED AND THE ZONE IS SCHEDULED AS UNOCCUPIED, THE MINIMUM BOX POSITION SHALL BE THE UNOCCUPIED FLOW.

HYDRONIC REHEAT COIL VALVE:
THE CONTROLLER SHALL MEASURE THE ZONE TEMPERATURE AND OPEN THE REHEAT COIL VALVE UPON DROP OF TEMPERATURE TO MAINTAIN ITS HEATING SETPOINT.

DISCHARGE AIR TEMPERATURE:
THE BAS SHALL MONITOR THE DISCHARGE AIR TEMPERATURE FROM THE VAV CONTROLLER. ALARMS SHALL BE PROVIDED AS FOLLOWS:
1. HIGH DISCHARGE AIR TEMPERATURE: IF THE DISCHARGE AIR TEMPERATURE IS GREATER THAN 100°F (ADJUSTABLE).
2. LOW DISCHARGE AIR TEMPERATURE: IF THE DISCHARGE AIR TEMPERATURE IS LESS THAN 50°F (ADJUSTABLE).

A1 VAV DIAGRAM & SEQUENCE OF OPERATIONS
NTS

SEQUENCE OF OPERATION

RUN CONDITIONS - SCHEDULED:
CRAC UNITS (CRAC-1 & 2) SHALL BE CHILLED WATER CRAC UNITS WITH HUMIDIFIER.

CRAC UNITS ARE SET UP FOR REDUNDANCY: ONE UNIT RUNS, THE OTHER UNIT IS OFF ON STANDBY. THE LEAD UNIT SHALL RUN CONTINUOUSLY OR AS DEFINED BY THE BAS OPERATOR TO MAINTAIN USER DEFINED SETPOINT CONDITIONS. THE SUPPLY FAN SHALL RUN ANY TIME THE UNIT IS COMMANDED TO RUN. EACH CRAC UNIT SHALL RUN ACCORDING TO MANUFACTURER'S INTERNAL CONTROLS TO MAINTAIN ZONE TEMPERATURE SETPOINTS.

ALARMS:
1. HIGH ZONE TEMPERATURE: IF THE ZONE TEMPERATURE IS GREATER THAN THE COOLING SETPOINT BY 5°F (ADJUSTABLE).
2. LOW ZONE TEMPERATURE: IF THE ZONE TEMPERATURE IS LESS THAN THE HEATING SETPOINT BY 5°F (ADJUSTABLE).
3. HIGH FILTER STATIC: IF THE PRESSURE ACROSS THE FILTER EXCEEDS THE SETPOINT.

CHILLED WATER COOLING COIL OPERATION:
CONTROLLER SHALL MONITOR THE MIXED AIR TEMPERATURE T-01 AND MODULATE THE COOLING COIL VALVE TCV-01 OPEN TO MAINTAIN THE DEFINED COOLING SETPOINT (ADJUSTABLE).

HEATING COIL CONTROL
THE HEATING CONTROL MODE SHALL BE ENABLED WHENEVER
1. THE SUPPLY FAN IS ON
2. THE HEATING WATER PUMP IS ON.
3. THE COOLING COIL CONTROL VALVE IS CLOSED.

THE UNIT'S SELF-CONTAINED CONTROLS SHALL MONITOR THE ROOM TEMPERATURE (T-01) AND ON DROP OF ROOM TEMPERATURE OPEN THE HEATING WATER COIL VALVE (TCV-02) TO MAINTAIN ITS HEATING SETPOINT (ADJUSTABLE).

DEHUMIDIFICATION CONTROL:
DEHUMIDIFICATION CONTROL SHALL BE ENABLED. THE CRAC UNIT SHALL RUN ACCORDING TO ITS OWN INTERNAL CONTROLS TO MAINTAIN A MAXIMUM ZONE RELATIVE HUMIDITY AS IDENTIFIED ON M-001.

HUMIDIFICATION CONTROL:
THE HUMIDIFIER SHALL BE ENABLED TO MAINTAIN A MINIMUM ZONE RELATIVE HUMIDITY AS IDENTIFIED ON M-001.

HUMIDIFIER
HUMIDIFIER TO OPERATE UNDER ITS OWN INTERNAL CONTROLS AND SAFETIES TO MAINTING SPACE RELATIVE HUMIDIFTY. OPERATION AND MONITORING OF HUMIDIFIER TO BE CONTROLLED BY BAS.

UNIT SHUTDOWN:
THE UNIT SHALL SHUT DOWN AND GENERATE AN ALARM AT THE BAS IF ONE OF THE FOLLOWING CONDITIONS OCCURS:
1. AN EMERGENCY SHUTDOWN SIGNAL FROM A CENTRAL SWITCH (PER UFC 4-010-01) WHEN A CHEMICAL OR BIOLOGICAL THREAT IS IMMINENT.
2. HIGH TEMPERATURE IN ZONE.
3. RETRN AIR SMOKE LDETECTION: SA SMOKE ALARM UPON DETECTION OF SMOKE IN THE RETURN AIR INTAKE (SMK-01). THE SA SMOKE DETECTOR WILL ALSO ADDRESS THE FIRE ALARM CONTROL PANEL, RE:FIRE PROTECTION.
4. COMMANDED OFF BY BAS (NO ALARM).

LEAD UNIT ROTATION:
THE UNITS SHALL SWITCH LEAD-TO-LAG ON A WEEKLY BASIS AS ENABLED BY THE BAS.

BAS MONITOR:
THE CRAC UNITS SHALL BE MONITORED BY THE BAS.

A6 COMPUTER ROOM AIR CONDITIONER (CRAC) CONTROL DIAGRAM & SEQUENCE
NTS

STATE OF TEXAS
BRANDEN M. SCHNEIDER
129852
LICENSED PROFESSIONAL ENGINEER
6.24.2021

US Army Corps of Engineers ®

MARK	DESCRIPTION	DATE

DESIGNED BY: B. SCHNEIDER
DRAWN BY: A. CLEAR
CHECKED BY: A. FORAN
SUBMITTED BY: E. OLMESS
SIZE: ANSI D
FILENAME: K408-951-M-804
ISSUE DATE: JUNE 2022
CONTRACT NO.: W912PP-22-R-0021

US ARMY CORPS OF ENGINEERS
ALBUQUERQUE
ALBUQUERQUE, NEW MEXICO

JACOBS
JACOBS ENGINEERING GROUP INC.
777 Main Street
Fort Worth, Texas 76102

COMBAT RESCUE HELICOPTER SIMULATOR FACILITY
KIRTLAND AIR FORCE BASE (AFB)
BERNALILLO COUNTY, NEW MEXICO

CRH SIMULATOR FACILITY ADAL
CONTROLS

SHEET ID
951B
M-806

READY TO ADVERTISE

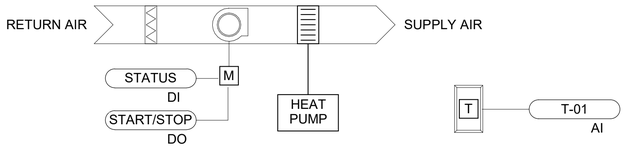

RUN CONDITIONS - SCHEDULED:
DUCTLESS SPLIT SYSTEM HEAT PUMP UNIT SHALL RUN CONTINUOUSLY. THE UNIT SHALL RUN SUBJECT TO ITS OWN INTERNAL SAFETIES AND CONTROLS TO MAINTAIN A TEMPERATURE SETPOINT AS INDICATED ON M-001. AN ALARM SHALL BE GENERATED IF THE SPACE TEMPERATURE EXCEEDS 80°F (ADJUSTABLE).

UNIT SHUTDOWN:
THE UNIT WILL SHUT DOWN IF ONE OF THE FOLLOWING CONDITIONS OCCURS. UNIT SHUTDOWN WILL ALIGN THE UNIT COMPONENTS TO THE FOLLOWING (REFER TO CONTROL DIAGRAM FOR ABBREVIATIONS): SUPPLY FAN (SF) OFF AND CONDENSING UNIT OFF.

E1 DUCTLESS MINI-SPLIT HEAT PUMP CONTROL DIAGRAM
SCALE NTS

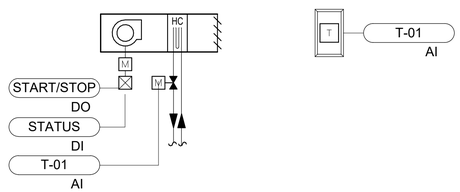

NOTES:
1. REFER TO M-809 FOR I/O POINTS LIST.
2. IN ROOMS WITH UNIT HEATERS ONLY ONE THERMOSTAT IS REQUIRED TO CONTROL BOTH THE SUPPLY FAN AND THE UNIT HEATER.

UNIT HEATER SEQUENCE OF OPERATION

A UNIT-MOUNTED THERMOSTAT WITH AN "AUTO-OFF" SWITCH LOCATED AS SHOWN, SHALL CYCLE THE FAN TO MAINTAIN ITS SETPOINT OF 55°F (ADJUSTABLE) AS SHOWN WHEN THE SWITCH IS IN THE "AUTO" POSITION. WHEN THE SWITCH IS IN THE "OFF" POSITION, THE FAN SHALL BE STOPPED. GENERATE ALARM WHEN SPACE TEMPERATURE IS LESS THAN 42°F (ADJUSTABLE).

C1 CABINET UNIT HEATER (HOT WATER) CONTROL DIAGRAM
SCALE NTS

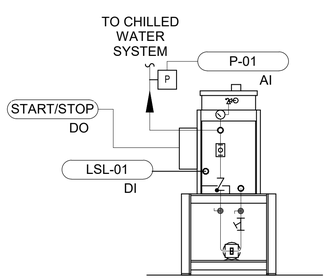

ALL MODES - THE UNIT SHALL OPERATE ACCORDING TO ITS UNIT MOUNTED CONTROLLER THAT IS CONNECTED TO THE BAS. A LOW LEVEL SWITCH WILL BE PROVED AND GENERATE AN ALARM WHEN THE GLYCOL TANK LEVEL IS AT THE MINIMUM ALARM LEVEL SET BY THE MANUFACTURER AND PUMP SHALL BE STOPPED.

PUMP SHALL ACTIVATE WHEN PRESSURE SWITCH IN CHILLED WATER SYSTEM REGISTERS 32 PSIG (ADJUSTABLE). PUMP SHALL OPERATE UNTIL PRESSURE IN CHILLED WATER SYSTEM REACHES 35 PSIG (ADJUSTABLE), AT WHICH POINT IT SHALL SHUT DOWN.

A1 GLYCOL FEEDER (GF-1) CONTROL DIAGRAM
SCALE NTS

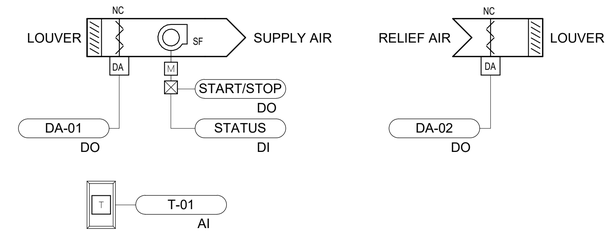

NOTES:
1. REFER TO M-809 FOR I/O POINTS LIST.
2. IN ROOMS WITH UNIT HEATERS, ONLY ONE THERMOSTAT IS REQUIRED TO CONTROL BOTH THE SUPPLY FAN AND THE UNIT HEATER.
3. ALL OUTDOOR AIR AND RELIEF AIR DAMPERS SHALL BE LOW LEAKAGE DAMPERS WITH MAXIMUM LEAKAGE OF 3 CFM/SF AT 1 IN W.C.

SUPPLY FAN SEQUENCE OF OPERATION

UNIT CONFIGURATION:
SUPPLY FAN SHALL SERVE AS GENERAL VENTILATION FOR MECHANICAL ROOMS AS IDENTIFIED ON PLANS.

RUN CONDITIONS - CONTINUOUS:
THE SUPPLY FAN SHALL RUN TO MAINTAIN THE MINIMUM OUTSIDE AIR REQUIRED OR DURING ECONOMIZER MODE AS COMMANDED BY THE BASE BAS OPERATOR INTERFACE.

FAN:
THE FAN SHALL HAVE A USER DEFINABLE MINIMUM RUNTIME OF 10 MINUTES (ADJUSTABLE).

FAN STATUS:
THE BAS SHALL MONITOR THE FAN STATUS AND GENERATE AN ALARM AT THE USER INTERFACE UPON THE FOLLOWING CONDITIONS:
1. FAN FAILURE: COMMANDED ON, BUT THE STATUS IS OFF.
2. FAN IN HAND: COMMANDED OFF, BUT THE STATUS IS ON.
3. FAN RUNTIME EXCEEDED: FAN STATUS RUNTIME EXCEEDS A USER DEFINABLE LIMIT (ADJUSTABLE).

UNIT SHUTDOWN:
THE BAS SHALL SHUTDOWN THE UNIT AND GENERATE AN ALARM AT THE USER INTERFACE UPON ONE OF THE FOLLOWING CONDITIONS:
1. ATFP EMERGENCY SHUTDOWN: AN EMERGENCY SHUTDOWN SIGNAL FROM A CENTRAL PUSH BUTTON SWITCH (PER UFC 4-010-01) WHEN A CHEMICAL OR BIOLOGICAL THREAT IS IMMINENT.
2. COMMANDED OFF BY THE BAS.
3. FAN: FAN FAILURE AS INDICATED ABOVE.

UPON UNIT SHUTDOWN, THE COMPONENTS SHALL BE ALIGNED TO THE FOLLOWING: SUPPLY FAN OFF, RELIEF AIR DAMPER CLOSED, SUPPLY AIR DAMPER CLOSED.

D6 SUPPLY FAN CONTROL DIAGRAM
SCALE NTS

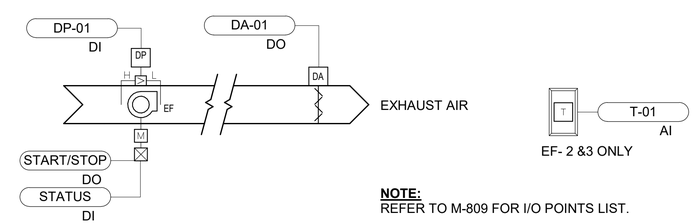

NOTE:
REFER TO M-809 FOR I/O POINTS LIST.

EXHAUST FAN (EF-1,2,3,4, & 5) SEQUENCE OF OPERATION

EXHAUST FAN:
EF-1 SERVES AS RESTROOM EXHAUST. EF-2&3 SERVE MECHANICAL AND ELECTRICAL ROOMS. EF-4&5 SERVE IMAGE GENERATOR ROOMS.
RUN CONDITIONS:
EF-1 SHALL RUN ACCORDING TO THE USER DEFINED BUILDING OPERATING SCHEDULE (ADJUSTABLE), OR AS COMMANDED BY THE BASE BAS OPERATOR INTERFACE. EF 2&3 TOOPERATE WHEN SPACE TEMPERATURE IN SPACE EXCEEDS SPACE SETPOINT. EF-4 & 5 SHALL RUN WHEN ACTIVATED BY SWITCH LOCATED DIRECTLY OUTSIDE OF SPACE.

FAN:
THE FAN SHALL HAVE A USER DEFINABLE MINIMUM RUNTIME OF 30 MINUTES (ADJUSTABLE).

FAN STATUS:
THE BAS SHALL MONITOR THE FAN STATUS, AND PROVIDE AN ALARM TO THE USER INTERFACE PANEL FOR THE FOLLOWING:
1. FAN FAILURE: COMMANDED ON, BUT FAN STATUS IS OFF.
2. FAN IN HAND: COMMANDED OFF, BUT FAN STATUS IS ON.
3. FAN RUNTIME EXCEEDED: FAN STATUS RUNTIME EXCEEDS A USER DEFINABLE LIMIT (ADJUSTABLE).

UNIT SHUTDOWN:
THE UNIT SHALL SHUT DOWN IF ONE OF THE FOLLOWING CONDITIONS OCCURS. UNIT SHUTDOWN SHALL ALIGN THE UNIT COMPONENTS TO THE FOLLOWING: EXHAUST FAN OFF, DAMPER CLOSED. UPON SHUTDOWN ON ONE OF THE FOLLOWING FAULT CONDITIONS, THE BAS SHALL GENERATE AN ALARM AT THE USER INTERFACE.
1. EMERGENCY SHUTDOWN: AN EMERGENCY SHUTDOWN SIGNAL FROM A CENTRAL PUSH BUTTON SWITCH WHEN A CHEMICAL OR BIOLOGICAL THREAT IS IMMINENT.
2. FAN: FAN FAILURE ALARM PER THE FOLLOWING:
   a. EXHAUST FAN FAILURE: COMMANDED ON, BUT STATUS IS OFF.
   b. EXHAUST FAN IN HAND: COMMANDED OFF, BUT STATUS IS ON.

A6 EXHAUST FANS (EF - 1,2,3,4, & 5) CONTROL DIAGRAM & SEQUENCE
SCALE NTS

STATE OF TEXAS
BRANDEN M. SCHNEIDER
129852
LICENSED
PROFESSIONAL ENGINEER
6.24.2021

US Army Corps of Engineers ®

MARK	DESCRIPTION	DATE

ISSUE DATE: JUNE 2022
CONTRACT NO.: W912PP-22-R-0021
DESIGNED BY: B. SCHNEIDER
DRAWN BY: A. CLEAR
CHECKED BY: C. KORPASH
SUBMITTED BY: E. OLNESS
SIZE: ANSI D
FILENAME: K4A9-95-1-M-805

US ARMY CORPS OF ENGINEERS
ALBUQUERQUE
ALBUQUERQUE, NEW MEXICO

JACOBS
JACOBS ENGINEERING GROUP INC.
777 Main Street
Fort Worth, TX 76102

COMBAT RESCUE HELICOPTER SIMULATOR FACILITY
KIRTLAND AIR FORCE BASE (AFB),
BERNALILLO COUNTY, NEW MEXICO

CRH SIMULATOR FACILITY ADAL
CONTROLS

SHEET ID
951B
M-807

READY TO ADVERTISE

I/O POINTS LIST

POINT NAME	POINT ID	HARDWARE AI	HARDWARE AO	HARDWARE DI	HARDWARE DO	SOFTWARE ANAL	SOFTWARE DIGIT	SOFTWARE SCHED	SOFTWARE TRE	SOFTWARE ALAR	GRAPHIC	COMMENTS
CHILLED WATER SYSTEM												
CHILLED WATER CONTROL VALVE	FCV-01		X						X	X	X	
CH-1 STATUS	STATUS			X					X		X	
CH-1 ENABLE	ENABLE				X				X	X	X	
CH-1 DATA LINK	DATA LINK								X	X	X	
CHP-1 FAULT	FAULT			X						X	X	
CHP-1 ENABLE/DISABLE	START/STOP				X				X		X	
CHILLER FLOW SWITCH	FS-CHW-01	X							X		X	
CHILLED WATER SUPPLY TEMPERATURE	T-01	X							X	X	X	
CHILLED WATER RETURN TEMPERATURE	T-02	X							X	X	X	
CHP-1 SPEED	SPEED	X	X						X		X	
CH-2 STATUS	STATUS			X					X		X	
BUILDING DIFFERENTIAL PRESSURE SENSOR	DP-03	X							X	X	X	
CHP-2 FAULT	FAULT			X						X	X	
CHP-2 ENABLE/DISABLE	START/STOP				X				X		X	
CHP-2 SPEED	SPEED	X	X						X		X	
CHP-1 STATUS	STATUS			X					X		X	
CHP-2 STATUS	STATUS			X					X		X	
CH-2 ENABLE	ENABLE				X				X	X	X	
CH-2 DATA LINK	DATA LINK								X	X	X	
CHILLED WATER CONTROL VALVE	CV-01			X	X				X	X	X	
CHILLED WATER CONTROL VALVE	CV-02			X	X				X	X	X	
HEATING HOT WATER SYSTEM												
P-02 VFD START/STOP	START/STOP				X				X		X	
P-02 VFD SPEED	SPEED	X	X						X	X	X	PUMP SPEED COMMAND AND VFD SPEED FEEDBACK
P-02 VFD FAULT	FAULT			X					X	X	X	
P-02 VFD STATUS	STATUS			X					X	X	X	
P-01 VFD START/STOP	START/STOP				X				X		X	
P-01 VFD SPEED	SPEED	X	X						X	X	X	PUMP SPEED COMMAND AND VFD SPEED FEEDBACK
P-01 VFD FAULT	FAULT			X					X	X	X	
P-01 VFD STATUS	STATUS			X					X	X	X	
HOT WATER SUPPLY TEMPERATURE	T-01	X				X			X	X	X	
HOT WATER RETURN TEMPERATURE	T-02	X							X	X	X	TEMPERATURE SENSOR
B-1 ENABLE/DISABLE	START/STOP				X				X		X	
B-1 STATUS	STATUS			X					X	X	X	
B-1 FAULT	FAULT			X					X	X	X	
B-2 ENABLE/DISABLE	START/STOP				X				X		X	
B-2 STATUS	STATUS			X					X	X	X	
B-2 FAULT	FAULT			X					X	X	X	
HOT WATER MAKEUP CONTROL VALVE	CV-01				X				X	X	X	
B-2 HOT WATER CONTROL VALVE	CV-01.2			X	X				X		X	
B-1 HOT WATER CONTROL VALVE	CV-01.1			X	X				X		X	
HOT WATER RETURN FLOW	F-02	X							X	X	X	FLOW METER
B-2 HOT WATER SUPPLY TEMPERATURE	T-01.2	X							X	X	X	
B-1 HOT WATER SUPPLY TEMPERATURE	T-01.1	X							X	X	X	
B-1 HOT WATER FLOW SWITCH	FS-01.1			X					X		X	
B-2 HOT WATER FLOW SWITCH	FS-01.2			X					X		X	
B-1 ALARM	ALARM			X					X	X	X	
B-2 ALARM	ALARM			X					X	X	X	
B-2 HOT WATER DIFFERENTIAL PRESSURE	DP-02.1	X							X		X	
PRIMARY PUMP 2 VFD START/STOP	START/STOP				X				X		X	
PRIMARY PUMP 2 VFD SPEED	SPEED	X	X						X	X	X	PUMP SPEED COMMAND AND VFD SPEED FEEDBACK
PRIMARY PUMP 2 VFD FAULT	FAULT			X					X	X	X	
PRIMARY PUMP 2 VFD STATUS	STATUS			X					X	X	X	
PRIMARY PUMP VFD START/STOP	START/STOP				X				X		X	
PRIMARY PUMP VFD SPEED	SPEED	X	X						X	X	X	PUMP SPEED COMMAND AND VFD SPEED FEEDBACK
PRIMARY PUMP VFD FAULT	FAULT			X					X	X	X	
PRIMARY PUMP VFD STATUS	STATUS			X					X	X	X	

STATE OF TEXAS
BRANDEN M. SCHNEIDER
129852
LICENSED
PROFESSIONAL ENGINEER
6.24.2021

US Army Corps of Engineers ®

MARK	DESCRIPTION	DATE

DESIGNED BY: B. SCHNEIDER
DRAWN BY: A. CLEAR
CHECKED BY: A. FORAN
SUBMITTED BY: E. OLMESS
SIZE: ANSI D
FILENAME: K408-951-M-808
ISSUE DATE: JUNE 2022
CONTRACT NO.: W912PP-22-R-0021

US ARMY CORPS OF ENGINEERS
ALBUQUERQUE
ALBUQUERQUE, NEW MEXICO

JACOBS
JACOBS ENGINEERING GROUP INC.
777 Main Street
FORT WORTH, TX 76102

COMBAT RESCUE HELICOPTER SIMULATOR FACILITY
KIRTLAND AIR FORCE BASE (AFB).
BERNALILLO COUNTY, NEW MEXICO

CRH SIMULATOR FACILITY ADAL
CONTROLS

SHEET ID
951B
M-808

READY TO ADVERTISE

I/O POINTS LIST CONT.

POINT NAME	POINT ID	HARDWARE POINTS AI	AO	DI	DO	SOFTWARE POINTS ANAL	DIGIT	SCHED	TRE	ALAR	GRAPHIC	COMMENTS
HVAC OVERRIDE BUTTON												
START	STATUS			X							X	
AHU-1												
MIXED AIR TEMPERATURE	T-02	X							X	X	X	TEMPERATURE SENSOR (AVERAGING)
FILTER STATUS	DP-02			X					X	X	X	DIFFERENTIAL PRESSURE SWITCH
SF START/STOP	START/STOP				X				X		X	
SF SPEED	SPEED		X						X		X	
SF FAULT	FAULT			X					X	X	X	AUX CONTACT FOR VFD
CHW CONTROL VALVE	TCV-02	X	X						X	X	X	CONTROL VALVE
RETURN AIR DAMPER	DA-02		X	X					X	X	X	DAMPER ACTUATOR WITH END SWITCH
SUPPLY DUCT PRESSURE	DP-03	X							X	X	X	DIFFERENTIAL TEMPERATURE SENSOR
SUPPLY SMOKE DETECTOR	SMK-01			X					X	X	X	SMOKE DETECTOR
CHW COIL TEMPERATURE	T-03	X				X			X	X	X	TEMPERATURE SENSOR
FREEZE STATUS	FR-01			X					X	X	X	FREEZE STATUS (AVERAGING)
TO FACP	TO FACP										X	HARD WIRE TO THE FACP
RETURN AIR TEMPERATURE	T-01	X							X	X	X	TEMPERATURE SENSOR
ECONOMIZER DAMPER	DA-03		X	X					X	X	X	DAMPER ACTUATOR WITH END SWITCH
RELIEF AIR DAMPER	DA-01		X	X					X	X	X	DAMPER ACTUATOR WITH END SWITCH
SF VFD STATUS	STATUS			X					X		X	
CHW CONTROL VALVE	TCV-01	X	X						X	X	X	CONTROL VALVE
PRESSURE SENSOR	DP-01			X						X	X	
OA DAMPER	FMS-02	X							X	X	X	ELECTRIC DAMPER ACTUATOR WITH END SWITCH
HW COIL LEAVING TEMPERATURE	T-04	X				X			X	X	X	TEMPERATURE SENSOR
RF START/STOP	START/STOP				X				X		X	
RF SPEED	SPEED		X						X		X	
RF FAULT	FAULT			X					X	X	X	AUX CONTACT FOR VFD
RF VFD STATUS	STATUS			X					X		X	
OA DAMPER	FMS-01	X							X	X	X	ELECTRIC DAMPER ACTUATOR WITH END SWITCH
ECONOMIZER DAMPER	FT-02		X	X					X	X	X	DAMPER ACTUATOR WITH END SWITCH
ECONOMIZER DAMPER	FT-03		X	X					X	X	X	DAMPER ACTUATOR WITH END SWITCH
ECONOMIZER DAMPER	FT-01		X	X					X	X	X	DAMPER ACTUATOR WITH END SWITCH
AHU-2												
MIXED AIR TEMPERATURE	T-02	X							X	X	X	TEMPERATURE SENSOR (AVERAGING)
FILTER STATUS	DP-02			X					X	X	X	DIFFERENTIAL PRESSURE SWITCH
SF START/STOP	START/STOP				X				X		X	
SF SPEED	SPEED		X						X		X	
SF FAULT	FAULT			X					X	X	X	AUX CONTACT FOR VFD
CHW CONTROL VALVE	TCV-02	X	X						X	X	X	CONTROL VALVE
SUPPLY SMOKE DETECTOR	SMK-01			X					X	X	X	SMOKE DETECTOR
CHW COIL TEMPERATURE	T-03	X				X			X	X	X	TEMPERATURE SENSOR
FREEZE STATUS	FR-01			X					X	X	X	FREEZE STATUS (AVERAGING)
TO FACP	TO FACP										X	HARD WIRE TO THE FACP
SF VFD STATUS	STATUS			X					X		X	
CHW CONTROL VALVE	TCV-01	X	X						X	X	X	CONTROL VALVE
HW COIL LEAVING TEMPERATURE	T-04	X				X			X	X	X	TEMPERATURE SENSOR
ECONOMIZER DAMPER	FT-03		X	X					X	X	X	DAMPER ACTUATOR WITH END SWITCH
ECONOMIZER DAMPER	DA-02		X	X					X	X	X	DAMPER ACTUATOR WITH END SWITCH
ECONOMIZER DAMPER	DA-03		X	X					X	X	X	DAMPER ACTUATOR WITH END SWITCH
ECONOMIZER DAMPER	DA-04		X	X					X	X	X	DAMPER ACTUATOR WITH END SWITCH
RETURN AIR DAMPER	DA-05		X	X					X	X	X	DAMPER ACTUATOR WITH END SWITCH
OA DAMPER	FMS-02	X							X	X	X	ELECTRIC DAMPER ACTUATOR WITH END SWITCH

I/O POINTS LIST CONT.

POINT NAME	POINT ID	HARDWARE POINTS AI	AO	DI	DO	SOFTWARE POINTS ANAL	DIGIT	SCHED	TRE	ALAR	GRAPHIC	COMMENTS
CHW CONTROL VALVE	TCV-01	X	X						X	X	X	CONTROL VALVE
UNIT HEATER												
UH START/STOP	START/STOP				X				X		X	
UH STATUS	STATUS			X					X		X	
TEMPERATURE	T-01	X							X	X	X	TEMPERATURE SENSOR
TEMPERATURE	T-01	X							X	X	X	TEMPERATURE SENSOR
DUCTLESS MINI-SPLITS												
START/STOP	START/STOP				X				X		X	
STATUS	STATUS			X					X		X	
TEMPERATURE	T-01	X							X	X	X	TEMPERATURE SENSOR
EF-4 & 5												
EF START/STOP	START/STOP				X				X		X	
EF STATUS	STATUS			X					X		X	
EA DAMPER	DA-01			X	X				X	X	X	ELECTRIC DAMPER ACTUATOR - OPEN/CLOSE
EF PRESSURE SWITCH	DP-01			X					X		X	DIFFERENTIAL PRESSURE SWITCH
GLYCOL FEEDER												
START/STOP	START/STOP				X				X		X	
LOW LEVEL SWITCH	LSL-01			X					X	X	X	
DHW RETURN TEMPERATURE	P-01	X							X	X	X	TEMPERATURE SENSOR
SUPPLY FAN												
FAN STATUS	STATUS			X					X		X	
FAN START/STOP	START/STOP				X				X		X	
SUPPLY DAMPER	DA-01			X	X				X	X	X	ELECTRIC DAMPER ACTUATOR - OPEN/CLOSE
RETURN DAMPER	DA-02			X	X				X	X	X	ELECTRIC DAMPER ACTUATOR - OPEN/CLOSE
TEMPERATURE	T-01	X							X	X	X	TEMPERATURE SENSOR
TEMPERATURE	T-01	X							X	X	X	TEMPERATURE SENSOR
VAV WITH HYDRONIC REHEAT												
ROOM AIR TEMPERATURE	T-01	X							X	X	X	TEMPERATURE SENSOR
PRIMARY AIR DAMPER	DA-01	X							X	X	X	DAMPER ACTUATOR
CONTROL VALVE	TCV-01	X	X						X	X	X	CONTROL VALVE (AS PROVIDED)
SUPPLY AIR TEMPERATURE	T-02	X							X	X	X	TEMPERATURE SENSOR
FLOW SENSOR	F-01	X							X		X	FLOW SENSOR
ROOM OCCUPANCY SENSOR	OC-01			X					X		X	ROOM OCCUPANCY SENSOR
ROOM AIR TEMPERATURE	T-01	X							X	X	X	TEMPERATURE SENSOR
ROOM AIR TEMPERATURE	H-01	X							X	X	X	TEMPERATURE SENSOR
COMPUTER ROOM AIR CONDITIONER (CRAC)												
PRESSURE SENSOR	DP-01	X							X	X	X	
FAN START/STOP	START/STOP				X				X		X	
FAN STATUS	STATUS			X					X		X	
TEMPERATURE	T-02	X							X	X	X	TEMPERATURE SENSOR
CHW CONTROL VALVE	TCV-01	X	X						X	X	X	CONTROL VALVE
HW COIL LEAVING TEMPERATURE	T-01	X				X			X	X	X	TEMPERATURE SENSOR
HUMIDIFIER START/STOP	START/STOP				X				X		X	
HUMIDIFIER STATUS	STATUS			X					X		X	
HUMIDITY SENSOR	H-01	X				X			X	X	X	HUMIDITY SENSOR
CHW CONTROL VALVE	TCV-02	X	X						X	X	X	CONTROL VALVE
SMOKE DETECTOR	SMK-01			X		X			X	X	X	SMOKE DETECTOR
TO FACP	TO FACP										X	HARD WIRE TO THE FACP

STATE OF TEXAS
BRANDEN M. SCHNEIDER
129852
LICENSED
PROFESSIONAL ENGINEER
6.24.2021

US Army Corps of Engineers ®

MARK	DESCRIPTION	DATE

ISSUE DATE: JUNE 2022
CONTRACT NO.: W912PP-22-R-0021

DESIGNED BY: B. SCHNEIDER
DRAWN BY: A. CLEAR
CHECKED BY: A. FORAN
SUBMITTED BY: E. OLNESS
SIZE: ANSI D
FILENAME: K468-951-M-808

US ARMY CORPS OF ENGINEERS
ALBUQUERQUE
ALBUQUERQUE, NEW MEXICO

JACOBS
JACOBS ENGINEERING GROUP INC.
777 Main Street
Fort Worth, TX 76102

COMBAT RESCUE HELICOPTER SIMULATOR FACILITY
KIRTLAND AIR FORCE BASE (AFB),
BERNALILLO COUNTY, NEW MEXICO

CRH SIMULATOR FACILITY ADAL
CONTROLS

SHEET ID
951B
M-809

READY TO ADVERTISE

ELECTRICAL LEGEND

- LOWER CASE DENOTES THE SWITCH THAT CONTROLS FIXTURE
- a A2 — LUMINAIRE TYPE DESIGNATION
- SYMBOL DENOTES GENERAL TYPE OF LUMINAIRE
- NT — UNSWITCHED NIGHT LIGHT (ON 24 HOURS)
- LED INDUSTRIAL STRIP FIXTURE, SUSPENSION MOUNTED
- LED DOWNLIGHT FIXTURE, CEILING OR PENDENT MOUNTED AS INDICATED
- LED DOWNLIGHT LIGHTING FIXTURE WITH INTEGRAL EMERGENCY DRIVER
- LED LIGHTING FIXTURE WALL MOUNTED, MOUNTING HEIGHT AS INDICATED
- LED LIGHTING FIXTURE WALL MOUNTED WITH INTEGRAL EMERGENCY DRIVER, MOUNTING HEIGHT AS INDICATED
- LED 2X4 LIGHTING FIXTURE
- LED 2X4 LIGHTING FIXTURE WITH INTEGRAL EMERGENCY DRIVER
- LED 2X2 LIGHTING FIXTURE
- LED 2X2 LIGHTING FIXTURE WITH INTEGRAL EMERGENCY DRIVER
- LED LINEAR LIGHTING FIXTURE
- LED LINEAR LIGHTING FIXTURE WITH INTEGRAL EMERGENCY DRIVER
- EXIT LIGHT, CEILING MOUNTED, SHADING INDICATES FACES DIRECTIONAL ARROWS WHERE INDICATED
- EXIT LIGHT, WALL MOUNTED, SHADING INDICATES FACES, DIRECTIONAL ARROWS WHERE INDICATED. MOUNT BOTTOM OF FIXTURE 6" ABOVE TOP OF DOOR UNLESS OTHERWISE NOTED
- EXIT SIGN WITH EMERGENCY LIGHT FIXTURE DUAL HEAD
- $ — WALL SWITCH. WHERE NO SUBSCRIPT PRESENT, SINGLE POLE 20A SWITCH. WHERE SUBSCRIPT IS PRESENT, SUBSCRIPT DENOTES THE FOLLOWING:
  - OS - LOW VOLTAGE DUAL TECHNOLOGY OCCUPANCY SENSOR SWITCH
  - D - LOW VOLTAGE MULTI SCENE DIMMING SWITCH
  - 3 - THREE WAY
  - VS - LOW VOLTAGE DUAL TECHNOLOGY VACANCY SENSOR SWITCH WITH RAISE / LOWER DIMMING
- VS OS — DUAL TECHNOLOGY (ULTRASONIC AND PASSIVE INFRARED) LOW VOLTAGE SENSOR, CEILING MOUNTED. "VS" PROGRAM AS VACANCY
- RC — LOW VOLTAGE ROOM CONTROLLER (LIGHTING AND RECEPTACLES)
- X: XX — PANEL NAME: CIRCUIT NUMBER
- SYSTEM GROUND, SIZE IN ACCORDANCE WITH NEC ARTICLE 250
- TW — GROUND ROD, TW INDICATES TEST WELL
- LIGHTNING PROTECTION CONDUCTORS. SEE LP DRAWINGS
- AIR TERMINAL
- PANELBOARD - MH IN ACCORDANCE WITH NEC
- T## — DRY TYPE TRANSFORMER ## REPRESENTS KVA SIZE
- SERVICE TRANSFOMER
- SPD — SURGE PROTECTIVE DEVICE
- Ex — EXISTING UNDGERGROUND ELECTRIC
- x Ex x — DEMOLISH UNDERGROUND ELECTRIC
- E — NEW UNDERGROUND ELECTRICAL
- OHEx — EXISTING OVERHEAD ELECTRIC PRIMARY
- T — UNDERGROUND TELECOMMUNICATIONS
- Tx — EXISTING UNDERGROUND TELECOMMUNICATIONS
- G — GROUND CONDUCTOR
- F — DIRECT BURIED FIBER OPTIC CABLE
- Fx — EXISTING DIRECT BURIED FIBER OPTIC CABLE
- H — TELECOMMUNICATION HANDHOLE
- HX — EXISTING TELECOM HANDHOLE
- POLE MOUNTED SITE LIGHTING FIXTURE
- T — TELECOM MAINTENANCE HOLE
- Tx — EXISTING TELECOM MAINTENANCE HOLE
- GROUNDING CONDUCTORS. SEE EG DRAWINGS
- UNDERGROUND GROUNDING CONDUCTORS. SEE EG DRAWINGS

- 20 AMP DUPLEX RECEPTACLE, SUBSCRIPT DENOTES THE FOLLOWING:
  - TV - DENOTES FOR TELEVISION. COORDINATE MOUNTING WITH TV OUTLET
  - S - SWITCHED RECEPTACLE WITH AUTOMATIC CONTROL
- 20 AMP DUPLEX GROUND FAULT CIRCUIT INTERRUPTER RECEPTACLE, SUBSCRIPT DENOTES THE FOLLOWING:
  - WP - DENOTES WEATHER PROOF HOUSING, UOI
  - EWC - DENOTES DEDICATED CRICUIT FOR ELECTRIC WATER COOLER. COORDINATE MOUNTING WITH EQUIPMENT PROVIDED.
- L6-30R SPECIAL RECEPTACLE.
- OR — RECEPTACLES MOUNTED ABOVE COUNTERS OR BACKSPLASH. COORDINATE WITH ARCHITECTURAL ELEVATION DRAWINGS.
- OR — HALF-SWITCHED RECEPTACLE. ONE(OR TWO) OUTLET(S) SWITCHED, AND ONE(OR TWO) OUTLET(S) UNSWITCHED. 3#12 CONDUCTORS
- OR — HALF-SWITCHED RECEPTACLE, MOUNTED ABOVE COUNTER
- OR — FULLY SWITCHED RECEPTACLE. ALL OUTLETS SWITCHED.
- 20 AMP QUAD RECEPTACLE, MH 1'-6", UON OR UOI
- 20 AMP CEILING MOUNTED RECEPTACLE OUTLET
- RECESSED MINIMUM 6-GANG FLOOR BOX WITH COMBINATION POWER AND DATA. PROVIDE QUAD 5-20R RECEPTACLE AND SPACE FOR DATA AND A/V. COORDINATE DATA REQUIREMENTS WITH TELECOM PLANS. COORDINATE WITH INTERIORS TO LOCATE BELOW TABLE.
- J — JUNCTION BOX, WALL MTD. MH 1'-6" UON.
  - FF - DENOTES FURNITURE FEED
- J J — JUNCTION BOX
  - FF - DENOTES FURNITURE FEED
- $M — MOTOR RATED SWITCH
- MOTOR DISCONNECT/SAFETY SWITCH OR ENCLOSED CIRCUIT BREAKER SHALL BE RATED 30/3/NF/1 UNLESS OTHERWISE INDICATED. "ST" DENOTES SHUNT TRIP
  - '30' DENOTES SWITCH AMPERE RATING;
  - '3' DENOTES NUMBER OF POLES;
  - '1' DENOTES SWITCH ENCLOSURE'S RATING;
  - DENOTES FUSED; FUSE RATING IN ACCORDANCE WITH MANUFACTURER'S RECOMMENDATIONS.
- MOTOR STARTER
- TTB CTB — FIRE-RETARDANT PLYWOOD BACKBOARD WITH NO ADDED UREA FORMALDEHYDE. SEE SPECIFICATIONS 01 33 29 FOR FSC CERTIFICATION REQUIREMENTS.
- WIRE/CONDUIT EXPOSED
- WIRE/CONDUIT CONCEALED IN CEILING, WALL, BENEATH FLOOR
- HOME RUN TO PANELBOARD WITH CIRCUIT DESIGNATION
- CONDUIT TURNED UP/CONDUIT TURNED DOWN
- EMERGENCY POWER OFF (EPO) BUTTON
- GROUND BAR

ABBREVIATIONS

A	AMPERS
AFF	ABOVE FINISHED FLOOR
C	CONDUIT
CATV	CABLE TELEVISION
CB	CIRCUIT BREAKER
CKT	CIRCUIT
COR	CONTRACTING OFFICER'S REPRESENTATIVE
CU	COPPER
EF	EXHAUST FAN
EGB	ELECTRIC GROUND BAR
ELU	EMERGENCY LIGHT UNIT
EWC	ELECTRIC WATER COOLER
FACP	FIRE ALARM CONTROL PANEL
GFCI	GOVERNMENT FURNISHED, CONTRACTOR INSTALLED
G	GROUND
GFI	GROUND FAULT INTERRUPTER
GFP	GROUND FAULT INTERRUPTER
GND	GROUND
HACR	HEATING AND AIR CONDITIONING REFRIGERATION
HP	HORSEPOWER
HZ	HERTZ
IDS	INTRUSION DETECTION SYSTEM
IMC	INTERMEDIATE METAL CONDUIT
KWH	KILOWATT HOUR
LED	LIGHT EMITTING DIODE
LT	LIGHT
LVS	LOW VOLTAGE SWITCH
MCB	MOLDED CASE BREAKER
MD	MOUNTING DISTANCE
MFR	MANUFACTURER
MH	MOUNTING HEIGHT
MLO	MAIN LUGS ONLY
MNS	MASS NOTIFICATION SYSTEM
MTD	MOUNTED
NEC	NATIONAL ELECTRICAL CODE
NF	NON FUSED
NO	NUMBER
NTS	NOT TO SCALE
OS	OCCUPANCY SENSOR
PAF	PAINTED AFTER FABRICATION
PH	PHASE
PIR	PASSIVE INFRARED
R/W	RACEWAY
SER	SERVICE ENTRANCE RATED
SPD	SURGE PROTECTIVE DEVICE
ST	SHUNT TRIP
TGB	TELECOM GROUND BAR
TR	TRANSFORMER
TVSS	TRANSIENT VOLTAGE SURGE SUPPRESSOR
TYP	TYPICAL
UL	UNDERWRITERS LABORATORY
UOI	UNLESS OTHERWISE INDICATED
UON	UNLESS OTHERWISE NOTED
V	VOLT
VT	VARIABLE AIR VOLUME TERMINAL UNIT
W, WP	WEATHERPROOF

- DRAWOUT CIRCUIT BREAKER OVER 600V
- DRAWOUT CIRCUIT BREAKER
- DRAWOUT FUSES
- CIRCUIT BREAKER
- FUSED DISCONNECT SWITCH
- DISCONNECT SWITCH
- FUSED DRAWOUT CIRCUIT BREAKER
- FUSE
- CONTACT
- 50N 51N — PROTECTIVE RELAY WITH ANSI/IEEE DEVICE NUMBERS
- POWER TRANSFORMER WITH VOLTAGES AS INDICATED
- SHIELDED K RATED POWER TRANSFORMER WITH VOLTAGES AS INDICATED
- 400/5 3 — CURRENT TRANSFORMER, QUANTITY AND RATIO AS INDICATED.
- 50/5 — GROUND CURRENT, ZERO SEQUENCE TYPE TRANSFORMER. RATIO AS INDICATED.
- 1 — POTENTIAL TRANSFORMER, QUANTITY AS INDICATED.
- 1 — DRAWOUT POTENTIAL TRANSFORMER, QUANTITY AS INDICATED.
- GROUND CONNECTION
- THERMAL OVERLOADS
- SPD — SURGE PROTECTION DEVICE
- AM — AMMETER
- WM — WATTMETER
- KK — KIRK KEY INTERLOCK
- CM — CIRCUIT METER

- PF — POWER FACTOR METER
- TB — TERMINAL BLOCK
- CS — CONTROL SWITCH
- M — MULTIFUNCTION METER AS SPECIFIED.
- LIGHTNING ARRESTOR
- TRANSFORMER CONNECTION DELTA-RESISTANCE GROUNDED WYE
- TRANSFORMER CONNECTION DELTA-GROUNDED WYE
- G — GENERATOR
- N E L — AUTOMATIC TRANSFER SWITCH, AS NOTED
- PANELBOARD
- POWER FACTOR CORRECTION CAPACITOR
- DRAWOUT STAB
- AC MOTOR

GENERAL NOTES

1. MOUNTING HEIGHT, UNLESS OTHERWISE NOTED, IS TO CENTER LINE OF EQUIPMENT.
2. MOUNT OUTLET BOXES SO THAT NONE OCCUR BACK TO BACK IN WALLS.
3. MECHANICAL EQUIPMENT IS SHOWN IN APPROXIMATE LOCATIONS. FOR EXACT LOCATIONS OF MECHANICAL EQUIPMENT AND PIPING, SEE MECHANICAL DRAWINGS. PROVIDE DISCONNECT SWITCHES AS REQUIRED BY THE NATIONAL ELECTRICAL CODE EVEN IF NOT INDICATED ON THE ELECTRICAL DRAWINGS.
4. COORDINATE THE LOCATIONS AND MOUNTING HEIGHTS OF LIGHTING FIXTURES IN MECHANICAL AND ELECTRICAL ROOMS WITH THE FINAL LOCATIONS OF PIPES, DUCTS AND OTHER EQUIPMENT FOR BEST ARRANGEMENT. FIXTURES SHALL BE EASILY ACCESSIBLE FOR RE-LAMPING.
5. CONDUCTOR AND CONDUIT SIZES ARE BASED ON COPPER CONDUCTORS WITH THWN INSULATION IN EMT CONDUIT. CIRCUIT BREAKERS, TERMINALS, ETC. SHALL BE RATED AND MARKED FOR 75 DEGREES MINIMUM. THE CONTRACTOR SHALL ADJUST CONDUIT SIZES BASED ON ACTUAL TYPE OF CONDUCTORS AND CONDUIT INSTALLED.
6. CIRCUIT NUMBERS ARE SHOWN ADJACENT TO ELECTRICAL DEVICES. WIRING SHALL BE IN ACCORDANCE WITH THE MANUFACTURERS RECOMMENDATIONS AND/OR REQUIREMENTS.
7. WIRING SHALL BE CONCEALED UNLESS EXPLICITLY INDICATED OTHERWISE.
8. REVISE PANELBOARD SCHEDULES ON AS-BUILT-DRAWING AND PANEL DIRECTORIES TO REFLECT FINAL INSTALLATION CONDITIONS.
9. SEAL PENETRATIONS THROUGH ROOFS, CEILINGS, FLOORS, WALLS AND FIRE WALLS TO MAINTAIN THE INTEGRITY OF THE AIR BARRIER, FIRE AND ACOUSTIC RATINGS OF THE ROOF, CEILINGS, WALLS AND FLOORS.
10. COMPONENTS WHICH CONSTITUTE AN ELECTRICAL SYSTEM SHALL BE FULLY COMPATIBLE WITH ONE ANOTHER AND SHALL BE APPROVED BY THE VARIOUS MANUFACTURERS FOR USE WITH ALL OTHER COMPONENTS WITHIN THE SYSTEM. (ONE EXAMPLE OF AN ELECTRICAL SYSTEM IS THE BUILDING LIGHTING SYSTEM COMPRISED OF FIXTURES, LAMPS, SWITCHES, BALLASTS, OCCUPANCY SENSORS AND DIMMING EQUIPMENT).
11. LOCATE RACEWAYS TO AVOID INTERFERENCE WITH DUCTS, PIPES, MECHANICAL EQUIPMENT, WITH REMOVAL OF CEILING TILES, OR WITH ACCESS TO EQUIPMENT WHICH REQUIRES PERIODIC ADJUSTMENT OR MAINTENANCE.
12. PROVIDE NAMEPLATES ON THE EXTERIOR OF ALL ELECTRICAL PANELS AND ENCLOSURES AS FOLLOWS: DEVICE ID, DEVICE RATING, POWER SOURCE, ARC FAULT DATA. FOR DISCONNECT SWITCHES AND MOTOR STARTERS THE TOP LINE SHALL BE THE NAME/DESIGNATION OF THE EQUIPMENT BEING FED BY THE SWITCH/STARTER.
13. PROVIDE DISCONNECT SWITCHES, ENCLOSED CIRCUIT BREAKERS, AND THE MAIN CIRCUIT BREAKERS AS LOCKABLE TYPE TO FACILITATE REPAIR LOCK OUT TAG OUT FOR SYSTEMS.
14. THE INTERRUPTING RATING OF THE PANELBOARDS AND ELECTRICAL EQUIPMENT SHALL BE INCREASED TO THE NEXT AVAILABLE RATING WHERE THERE IS NOT A RATING THAT IS EQUAL TO THE EQUIPMENTS LISTED SHORT CIRCUIT RATING.
15. PROVIDE CIRCUIT SIZED AS 2#12, 1#12G, IN 3/4" CONDUIT UNLESS OTHERWISE NOTED. PROVIDE 2#10, 1#10G IN 3/4" CONDUIT FOR 120VOLT CIRCUITS GREATER THAN 100FT AND 2#10, 1#10G IN 3/4" CONDUIT FOR 277VOLT CIRCUITS GREATER THAN 200FT.
16. RACEWAYS CROSSING STRUCTURAL EXPANSION JOINTS OR SEISMIC JOINTS SHALL BE PROVIDED WITH SUITABLE EXPANSION FITTINGS OR OTHER SUITABLE MEANS TO COMPENSATE FOR THE BUILDING EXPANSION AND CONTRACTION AND TO PROVIDE FOR CONTINUITY OF GROUNDING.
17. RECEPTACLES THAT HAVE GFI PROTECTION ARE TO BE WIRED SUCH THAT THE LOSS OF POWER ON ONE RECEPTACLE DOES NOT AFFECT DOWNSTREAM RECEPTACLES.
18. UNLESS OTHERWISE NOTED, EMT CONDUIT SHALL BE INSTALLED IN EXPOSED DRY AREAS WITH COMPRESSION FITTINGS. CONDUIT SHALL BE INSTALLED IN ACCORDANCE WITH THE SPECIFICATIONS. EXPOSED OUTLET BOXES SHALL BE CAST METAL WITH THREADED FITTINGS AND COVERS THAT FIT FLUSH WITH THE EDGES OF THE OUTLET BOXES. EXPOSED CONDUIT AND OUTLET BOXES SHALL BE PAINTED TO MATCH THE WALLS OR WIRE MESH.
19. DESIGN IS TO MEET NFPA 70 (NEC) 2020, AFI 32-1065, AND APPLICABLE UFC STANDARDS.
20. RED POWER IS DEDICATED FOR RECEPTACLES SERVING SPACES WITH SECURE TELECOMMUNICATION. PANELS WITH AN "R" IN THE NAME ARE DESIGNATED AS RED POWER. POWER, CIRCUITS, RECEPTACLES, DEVICES, AND EQUIPMENTS OTHER THAN RED POWER IS CONSIDERED BLACK POWER. MAINTAIN SEPARATION OF BLACK POWER AND RED POWER IN SEPARATE BOXES AND CONDUITS.

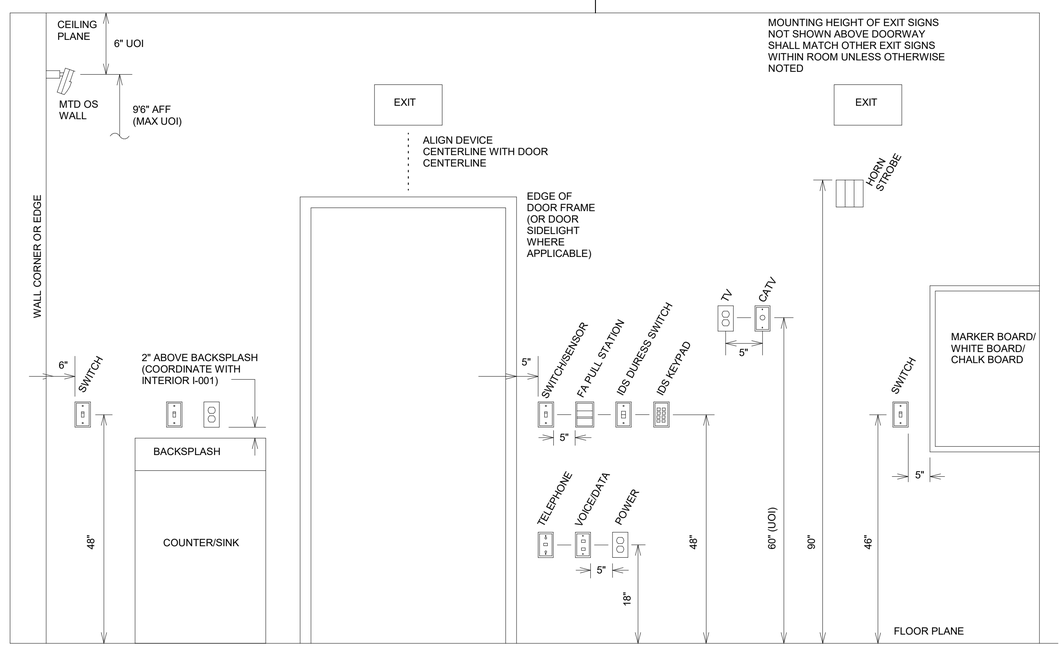

TYPICAL MOUNTING HEIGHTS COORDINATE WITH INTERIOR REFER TO I-001

(NOT TO SCALE)

STATE OF TEXAS — AARON McWHORTER 100310 — LICENSED PROFESSIONAL ENGINEER — 6.24.2021

READY TO ADVERTISE

US Army Corps of Engineers ®

MARK	DESCRIPTION	DATE

DESIGNED BY: A. MCWHORTER
DRAWN BY: S. WALCHER
CHECKED BY: V. MONTELLANO
SUBMITTED BY: E. COLNESS
ANSI D
ISSUE DATE: JUNE 2022
CONTRACT NO.: W912PP-22-R-0021
FILENAME: K486-951-E-001

US ARMY CORPS OF ENGINEERS
ALBUQUERQUE
ALBUQUERQUE, NEW MEXICO

JACOBS
JACOBS ENGINEERING GROUP INC.
777 Main Street
Fort Worth, TX 76102

COMBAT RESCUE HELICOPTER SIMULATOR FACILITY
KIRTLAND AIR FORCE BASE (AFB)
BERNALILLO COUNTY, NEW MEXICO
CRH SIMULATOR FACILITY ADAL
GENERAL NOTES AND SYMBOLS

SHEET ID
951B
E-001

A1 SITE PLAN DEMOLITION
1" = 40'-0"

GENERAL NOTES - SITE DEMO

A	REFER TO CIVIL DEMOLITION PLAN FOR SCOPE LIMITS.
B	FACILITIES NOT SCHEDULED FOR DEMOLITION ARE TO REMAIN IN SERVICE. SCHEDULE OUTAGES AND DOWNTIME WITH CONTRACTING OFFICER.
C	DEMOLISH EXISTING ELECTRICAL DUCTS BELOW BUILDING FOOT PRINT.
D	RELOCATE EXISTING TELECOMMUNICATION DUCT BANKS BELOW BUILDING FOOT PRINT SCHEDULED FOR DEMOLITION.
E	REFER TO T-001 FOR TELECOMMUNICATION SITE LEGEND, SYMBOLS AND ABBREVIATIONS. REFER TO E-001 FOR ELECTRICAL LEGEND, SYMBOLS, AND ABBREVIATIONS.

SHEET KEYNOTES

523	EXISTING PHASE 1 SERVICE ENTRANCE RATED SWITCHBOARD.
524	DEMOLISH EXISTING PDS TELECOM DUCT BANK BELOW BUILDING FOOT PRINT. CAP CONDUITS AND PROVIDE 24" OF SAND COVER AROUND CAPPED DUCTS.
525	EXISTING TELECOM MAINTENANCE HOLE TO REMAIN.
526	DEMOLISH EXISTING TRANSFORMER AND DUCT BANK BELOW BUILDING FOOTPRINT.
527	DEMOLISH ELECTRICAL WITHIN BUILDING 960 AND ADJACENT SHED. REMOVE ELECTRICAL DUCT BANKS AND CONDUCTORS ENTERING BUILDINGS BACK TO SOURCE.
528	ELECTRIC UTILITY POLE TO REMAIN. POLE REPLACEMENT IS UNDER A SEPARATE CONTRACT.
529	EXISTING B953 TRANSFORMER TO REMAIN. TRANSFORMER PRIMARY FEEDER TO REMAIN.
532	DEMOLISH DIRECT BURY FIBER OPTIC CABLE FOR BUILDINGS 953 AND 952. COORDINATE DEMOLITION OF EXISTING FIBER AND COPPER VOICE CABLE AND PROVISION OF NEW FIBER OPTIC AND VOICE COPPER CABLE FOR BUILDINGS 952 AND 953 WITHIN THE NEW DUCT BANK TO THE SPLICE CASES WITH THE COMM SQUADRON. BUILDINGS MUST REMAIN OPERATIONAL DURING NORMAL OPERATING HOURS
534	BURIED FIBER OPTIC SPLICE. CASE AND COPPER SPLICE CASE APPROXIMATE LOCATION. COORDINATE DEMOLITION WORK AND PROVISION OF FIBER OPTIC CABLE AND COPPER VOICE CABLE FROM THE NEW MAINTENANCE HOLE WITH THE COMM SQUADRON. BUILDINGS 952 AND 953 MAY NOT BE OUT OF SERVICE DURING OPERATING HOURS. NOTE: PROVIDE FUSION SPLICING FOR FIBER OPTIC CABLE AND 710 SPLICING FOR COPPER CABLES.
535	DEMOLISH DUCT BANK AND 650 PAIR TO DIRECT BURIED SPLICE CASE FEEDING BUILDINGS 954, 960, 953 AND 952. DEMOLITION CANNOT COMMENCE UNTIL CUTOVER TO NEW CABLING HAS TAKEN PLACE. COORDINATE WORK WITH COMM SQUADRON. BUILDINGS 952 AND 953 MAY NOT BE OUT OF SERVICE DURING HOURS OF OPERATION..
536	DEMOLISH HANDHOLE AND PULL CABLES BACK TO ADJACENT MAINTENANCE HOLE. SPLICE ON NEW CABLES AND RUN THROUGH THE NEW TELECOM CONDUITS HEADING NORTH. NOTE: PROVIDE FUSION SPLICING FOR FIBER OPTIC CABLE AND 710 SPLICING FOR COPPER CABLES.
550	EXISTING HANDHOLE HH C-0004 TO REMAIN.
552	DEMOLISH AND REMOVE EXISTING PARKING LOT LIGHTING AND PULL BOX. EXISTING CIRCUIT TO REMAIN WITH CONNECTION TO EXISTING PARKING LOT LIGHTING AND FOR NEW PARKING LOT LIGHTING. EXISTING LIGHTING FIXTURES NOT SHOWN CONNECTED TO CIRCUIT ARE TO REMAIN ACTIVE. PROVIDE NEW CIRCUIT CONNECTION WHERE REQUIRED.
553	REMOVE TWO EXISTING WALL MOUNTED LIGHTING FIXTURES AND ONE RECEPTACLE. CLEAN FOR REUSE. REMOVE CONDUCTORS BACK TO NEAREST DEVICE TO REMAIN AND PROVIDE COVER FOR BACK BOX.
555	REMOVE PARKING LOT LIGHT AND POLE. PROTECT CIRCUIT AND CONDUIT TO CONNECT NEW PARKING LOT LIGHTING.
556	DEMOLISH EXISTING PDS MAINTENANCE HOLE. DEMOLISH AND CAP CONDUITS TO A LOCATION OUTSIDE OF BUILDING 951B FOOT PRINT.
557	EXISTING MAINTENANCE HOLE 9BKW TO REMAIN.
558	DEMOLISH EXISTING HANDHOLE AFTER NEW MAINTENANCE HOLE AND CABLES HAVE BEEN PROVIDED.
559	EXISTING CONDUIT RUN TO BUILDING 948

KEY PLAN

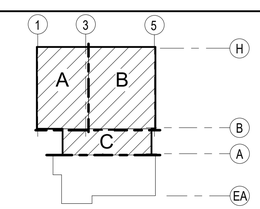

GRAPHIC SCALE

0 20' 40' 80' 120'
GRAPHIC SCALE: 1" = 40'-0"

PROJECT NORTH

PLAN NORTH

STATE OF TEXAS
AARON McWHORTER
100310
LICENSED
PROFESSIONAL ENGINEER
6.24.2021

US Army Corps of Engineers ®

MARK	DESCRIPTION	DATE

ISSUE DATE: JUNE 2022
CONTRACT NO. : W912PP-22-R-0021

DESIGNED BY: A. MCWHORTER
DRAWN BY: S. WALCHER
CHECKED BY: V. MONTELLANO
SUBMITTED BY: E. OLNESS
ANSI D
FILENAME: K469-951-ED101

US ARMY CORPS OF ENGINEERS
ALBUQUERQUE
ALBUQUERQUE, NEW MEXICO

JACOBS
JACOBS ENGINEERING GROUP INC.
777 Main Street
Fort Worth, TX 76102

COMBAT RESCUE HELICOPTER SIMULATOR FACILITY
KIRTLAND AIR FORCE BASE (AFB),
BERNALILLO COUNTY, NEW MEXICO

CRH SIMULATOR FACILITY ADAL
SITE PLAN - DEMOLITION

SHEET ID
951B
ED101

READY TO ADVERTISE

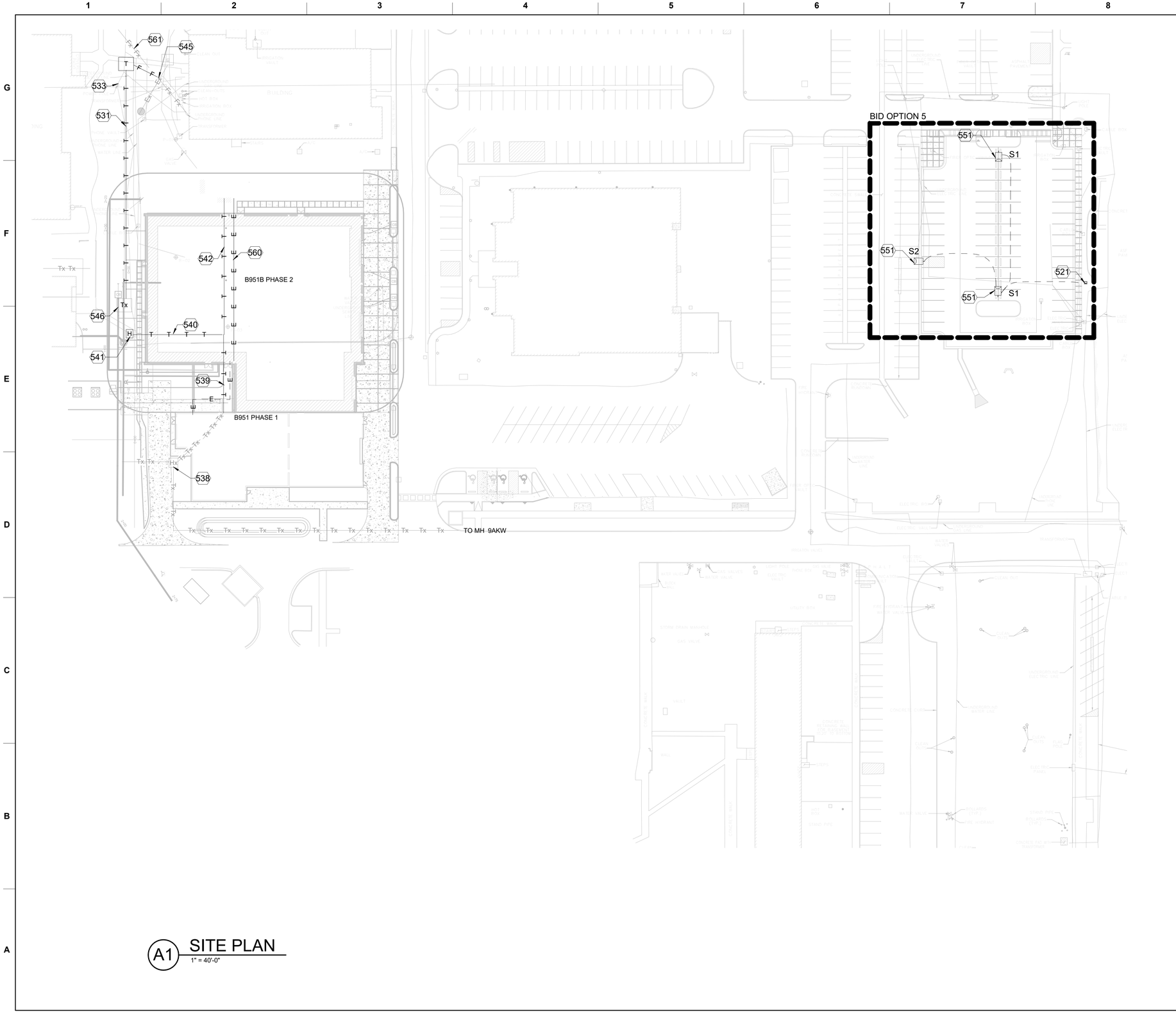

A1 SITE PLAN
1" = 40'-0"

GENERAL NOTES - SITE

A	COORDINATE WITH CIVIL PLANS FOR EXISTING, DEMOLITION, AND NEW SITE UTILITIES.
B	REMOVE EXISTING UTILITIES UNDER NEW BUILDING FOOTPRINT.
C	COORDINATE DUCT BANK DEPTH AND ROUTING WITH NEW AND EXISTING UTILITIES.
D	NEW PARKING LOT SITE LIGHTING INCLUDED IN BID OPTION 5.

SHEET KEYNOTES

521	EXISTING PARKING LOT LIGHTING TRANSFORMER. FIELD VERIFY EXISTING CONDITIONS. EXISTING CIRCUIT TO REMAIN.
531	NEW TELECOM DUCT BANK WITH (4) 4" CONDUITS. PROVIDE PULL ROPES IN CONDUITS. PROVIDE 3-CELL FABRIC INNERDUCT IN ONE CONDUIT FOR FIBER OPTIC CABLE PROVIDED TO SPLICE CASE AS REPLACEMENT FOR DEMOLISHED BURIED FIBER OPTIC CABLES TO SPLICE CASE FOR BUILDINGS 952 AND 953. PROVIDE 600 PAIR OSP CABLE FOR CABLES TO BE DEMOLISHED BETWEEN DEMOLISHED HANDHOLES AND BURIED SPLICE FOR BUILDINGS 952 AND 953. REF T-504/E7. NOTE: PROVIDE FUSION SPLICING FOR FIBER OPTIC CABLE AND 710 SPLICING FOR COPPER CABLE. PROVIDE NEW SPLICE CASES.
533	NEW MAINTENANCE HOLE WITH NEW CONNECTION TO BURIED SPLICE CASE. COORDINATE INSTALLATION WITH THE COMM SQUADRON. REF T-504/A1, A4.
538	EXISTING HANDHOLE C0004. SPLICE POINT FOR 50 PAIR COPPER VOICE CABLE AND 12 STRAND SINGLEMODE FIBER OPTIC CABLE. PROVIDE 50 PAIR COPPER AND 12 STRAND SINGLEMODE FIBER OPTIC CABLES INTO PHASE 1. PROVIDE BEP IN PHASE 1 TELECOM ROOM. PROVIDE 50 PAIR COPPER VOICE CABLE INTO PHASE TWO THROUGH NEW UNDERGROUND PDS CONDUIT. CONNECTED TO EXISTING 4" CONDUIT STUBOUTS FROM PHASE 1 TR.. INSTALL FIBER OPTIC CABLE INTO NIPR CABINET IN PHASE 1. PROVIDE 1U FIBER OPTIC PATCH PANEL WITH DUPLEX LC CONNECTORS. NOTE: PROVIDE FUSION SPLICING FOR FIBER OPTIC CABLE AND 710 SPLICING FOR COPPER CABLES.
539	PROVIDE (2) 4" PDS PVC CONDUITS, CONCRETE ENCASED, STUBBED 6" AFF IN PHASE 2 TELECOM ROOM, AND RUN AT -5'-6" BELOW FINISHED GRADE. CONNECT TO TWO EXISTING 4" CONDUITS STUBBED OUT OF PHASE 1 TELECOM ROOM. MATCH CONDUIT DEPTH AT CONNECTION POINT. PROVIDE 3" 3-CELL FABRIC INNERDUCT IN ONE CONDUIT.
540	PROVIDE (1) 2" CONDUIT STUBBED AT 6" AFF AND RUN AT 5'-0" BELOW FINISHED GRADE FOR CATV FROM TELECOM ROOM TO CONTRACTOR PROVIDED CATV HANDHOLE. PROVIDE PULL ROPE IN CONDUIT. SEE SHEET ES101 FOR HANDHOLE LOCATION.
541	NEW HANDHOLE 18" W X 24" L X 24" D. MARK CATV.
542	PROVIDE (2) 4" PDS PVC CONDUITS, CONCRETE ENCASED. FROM PHASE 2 TELECOM ROOM STUBBED 6" AFF IN TR AND RUN AT -5'-6" BELOW FINISHED FLOOR. CONDUITS STUB 5'-0" OUTSIDE OF BUILDING FOR CONTINUATION TO FUTURE PHASE 3. CAP CONDUITS AND BURY WITH 18" OF SAND AND NATIVE FILL FOR NEXT PHASE.
545	DIRECT BURIED SPLICE CASES APPROXIMATE LOCATIONS. SPLICE NEW FIBER AND COPPER FROM NEW MAINTENANCE HOLE TO EXISTING BURIED FIBER FROM BUILDINGS 652 AND 953..
546	EXISTING MH 9BKW
551	PROVIDE CIRCUIT FROM EXISTING PARKING LOT LIGHTING CIRCUIT TO NEW LIGHTING. PROTECT EXISTING CIRCUIT FEEDING EXISTING PARKING LOT LIGHTING. PROVIDE 2#10, #10 GROUND IN 1" CONDUIT.
560	PROVIDE (2) 2" SPARE CONDUITS FROM ELECTRICAL ROOM 138 AND STUB OUT INTO HANDHOLE 5FT OUTSIDE BUILDING FOOTPRINT FOR FUTURE.
561	DIRECT BURIED FIBER OPTIC CABLE TO BUILDING 952. DO NOT DEMOLISH. FUSION SPLICE TO NEW FIBER OPTIC CABLE FEEDING BUILIDINGS 952 AND 953.

KEY PLAN

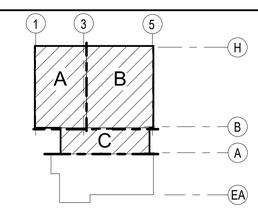

GRAPHIC SCALE

0 20' 40' 80' 120'

GRAPHIC SCALE: 1" = 40'-0"

PROJECT NORTH

PLAN NORTH

STATE OF TEXAS
AARON McWHORTER
100310
LICENSED
PROFESSIONAL ENGINEER
6.24.2021

US Army Corps of Engineers ®

MARK	DESCRIPTION	DATE

DESIGNED BY: A. MCWHORTER
DRAWN BY: S. WALCHER
CHECKED BY: V. MONTELLANO
SUBMITTED BY: E. OLMESS
ANSI D
ISSUE DATE: JUNE 2022
CONTRACT NO. : W912PP-22-R-0021
FILENAME: K4089-951-ES101

US ARMY CORPS OF ENGINEERS
ALBUQUERQUE
ALBUQUERQUE, NEW MEXICO

JACOBS
JACOBS ENGINEERING GROUP INC.
777 Main Street
Fort Worth, TX 76102

COMBAT RESCUE HELICOPTER SIMULATOR FACILITY
KIRTLAND AIR FORCE BASE (AFB)
BERNALILLO COUNTY, NEW MEXICO

CRH SIMULATOR FACILITY ADAL
SITE PLAN - OVERALL

SHEET ID
951B
ES101

READY TO ADVERTISE

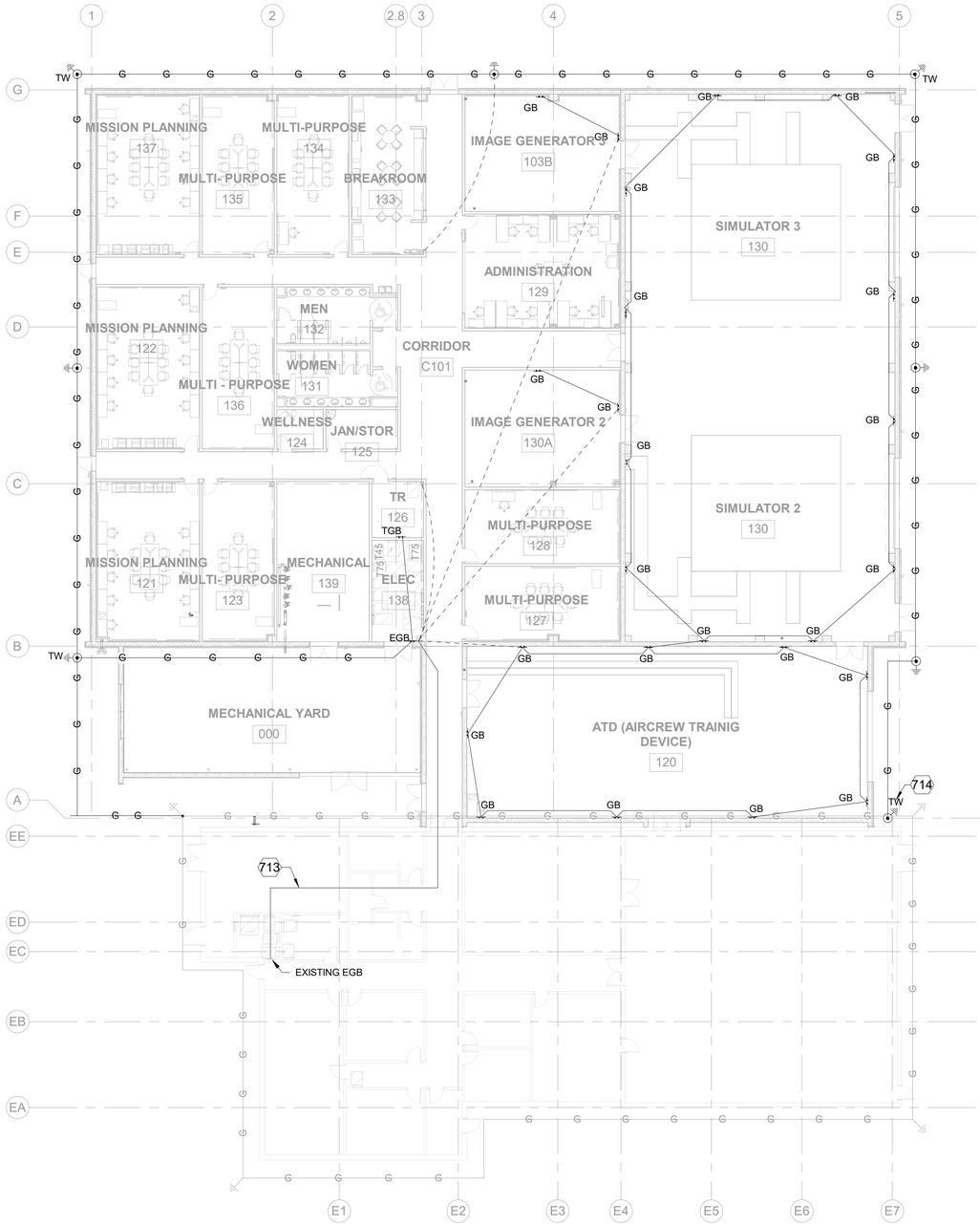

A1 GROUNDING PLAN - OVERALL

1/16" = 1'-0"

GENERAL NOTES - GROUNDING

A	PROVIDE GROUNDING CONNECTION TO EXISTING BUILDING GROUND SYSTEM. CONNECT AND EXTEND EXISTING GROUND LOOP. BOND TO BUILDING STEEL AND METAL ENCLOSURES AND RAISED FLOOR SUPPORTS. REFER TO GROUNDING RISER SHEET E-501.

SHEET KEYNOTES

713	PROVIDE INSULATED GROUND CONDUCTOR BACK TO MAIN GROUND BAR IN EXISTING ELECTRICAL ROOM.
714	PROVIDE UNDERGROUND EXOTHERMIC CONNECTION FROM NEW GROUND LOOP TO EXISTING GROUND LOOP IN TEST WELL.

KEY PLAN

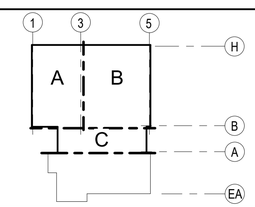

GRAPHIC SCALE

16 0 16 32

Scale: 1/16 INCH = 1 FOOT

PROJECT NORTH

PLAN NORTH

STATE OF TEXAS
AARON McWHORTER
100310
LICENSED
PROFESSIONAL ENGINEER
6.24.2021

US Army Corps of Engineers ®

MARK	DESCRIPTION	DATE

DESIGNED BY: A. MCWHORTER
DRAWN BY: S. WALCHER
CHECKED BY: V. MONTELLANO
SUBMITTED BY: E. OLMESS
SIZE: ANSI D
FILENAME: K486-951-EG100
ISSUE DATE: JUNE 2022
CONTRACT NO.: W912PP-22-R-0021

US ARMY CORPS OF ENGINEERS
ALBUQUERQUE
ALBUQUERQUE, NEW MEXICO

JACOBS
JACOBS ENGINEERING GROUP INC.
777 Main Street
Fort Worth, TX 76102

COMBAT RESCUE HELICOPTER SIMULATOR FACILITY
KIRTLAND AIR FORCE BASE (AFB),
BERNALILLO COUNTY, NEW MEXICO

CRH SIMULATOR FACILITY ADAL
GROUNDING PLAN - OVERALL

SHEET ID
951B
EG100

READY TO ADVERTISE

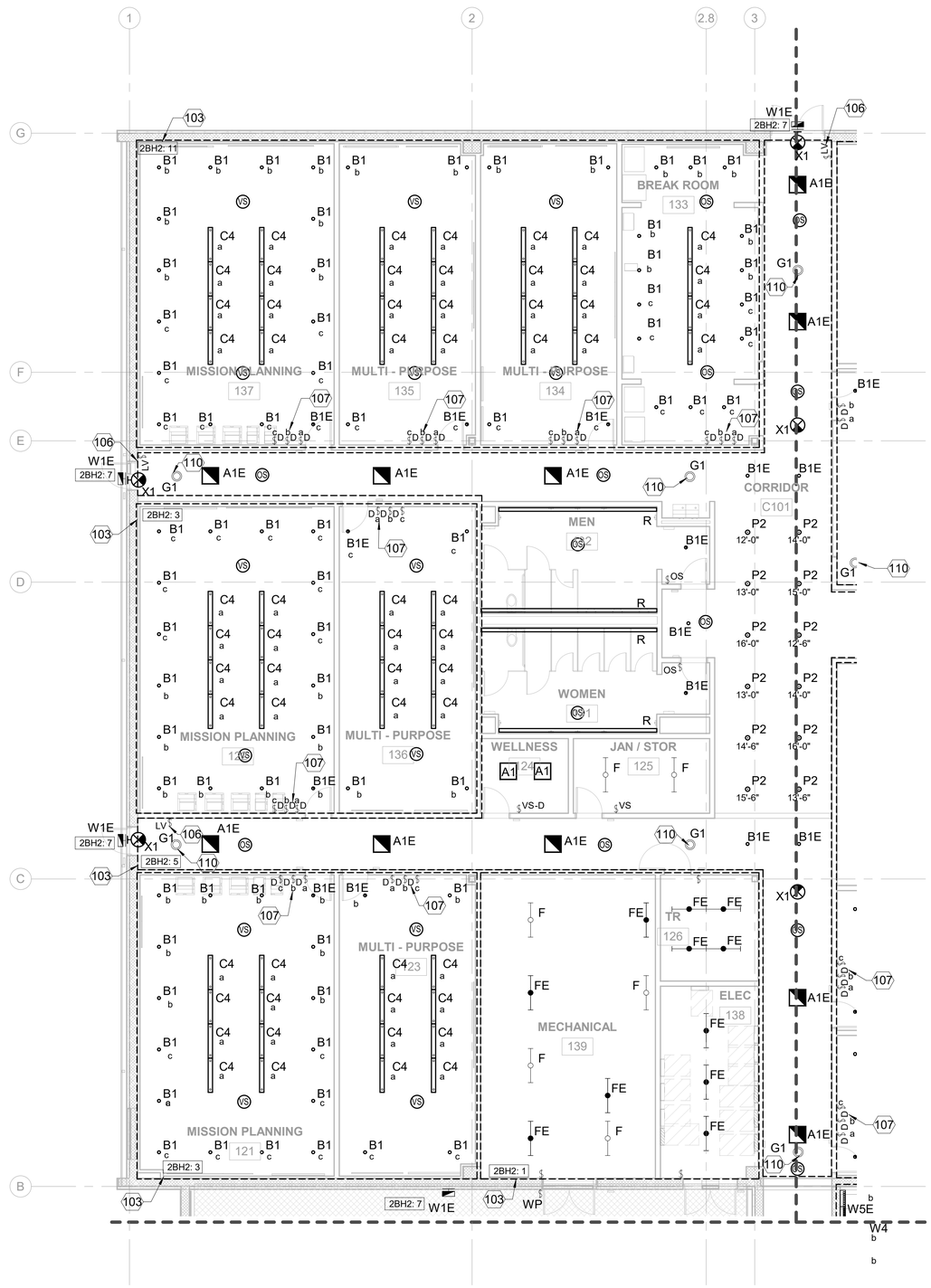

A1 LIGHTING PLAN - LEVEL 1 - AREA A

1/8" = 1'-0"

GENERAL NOTES - LIGHTING

A	REFER TO E-001 FOR GENERAL NOTES AND SYMBOLS.
B	REFER TO E-601 FOR LUMINAIRE SCHEDULE.
C	OCCUPANCY SENSOR LOCATIONS ARE SHOWN FOR GENERAL REFERENCE ONLY. REFER TO MANUFACTURER'S RECOMMENDATIONS FOR EXACT PLACEMENT AND QUANTITY FOR PROPER OPERATION.
D	PROVIDE PHOTOCELL ON THE ROOF FACING NORTH TO CONTROL EXTERIOR BUILDING MOUNTED LUMINAIRES.
E	PROVIDE OCCUPANCY SENSORS IN CORRIDORS INTERCONNECTED IN ORDER THAT WHEN ONE OCCUPANCY IS ACTIVATED IT TURNS THE CORRIDOR LIGHTING ON THROUGHOUT THE BUILDING 951B.

SHEET KEYNOTES

103	PROVIDE CIRCUIT INDICATED TO LIGHTING FIXTURES ENCLOSED WITHIN DASHED LINE.
106	PROVIDE BACK BOX AND BLANK COVER PLATE WITH CONDUIT UP TO CEILING SPACE FOR FUTURE LOW VOLTAGE SWITCH TO CONTROL RED BEACON STROBE FOR UNCLEARED VISITORS.
107	PROVIDE LOW VOLTAGE DIMMING WALL STATION FOR THREE ZONES A,B,C, CONTROLLED THROUGH SENSORS AND ROOM CONTROLLER.
110	CONNECT BEACON STROBES TYPE 'G1' FIXTURE THROUGHOUT THE FACILITY TO EXISTING CIRCUIT AND SWITCH IN BUILDING 951A PHASE 1 BEACONS.

KEY PLAN

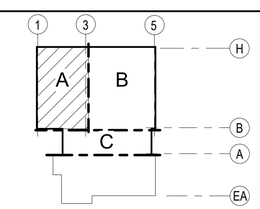

GRAPHIC SCALE

8 0 8 16

Scale: 1/8 INCH = 1 FOOT

PROJECT NORTH

PLAN NORTH

STATE OF TEXAS
AARON McWHORTER
100310
LICENSED PROFESSIONAL ENGINEER
6.24.2021

US Army Corps of Engineers ®

MARK	DESCRIPTION	DATE

DESIGNED BY: A. MCWHORTER
DRAWN BY: S. WALCHER
CHECKED BY: V. MONTELLANO
SUBMITTED BY: E. OLMESS
SIZE: ANSI D
ISSUE DATE: JUNE 2022
CONTRACT NO.: W912PP-22-R-0021
FILENAME: K486-951-EL111

US ARMY CORPS OF ENGINEERS
ALBUQUERQUE
ALBUQUERQUE, NEW MEXICO

JACOBS
JACOBS ENGINEERING GROUP INC.
777 Main Street
Fort Worth, TX 76102

COMBAT RESCUE HELICOPTER SIMULATOR FACILITY
KIRTLAND AIR FORCE BASE (AFB),
BERNALILLO COUNTY, NEW MEXICO

CRH SIMULATOR FACILITY ADAL

LIGHTING PLAN - LEVEL 1 - AREA A

SHEET ID
951B
EL111

READY TO ADVERTISE

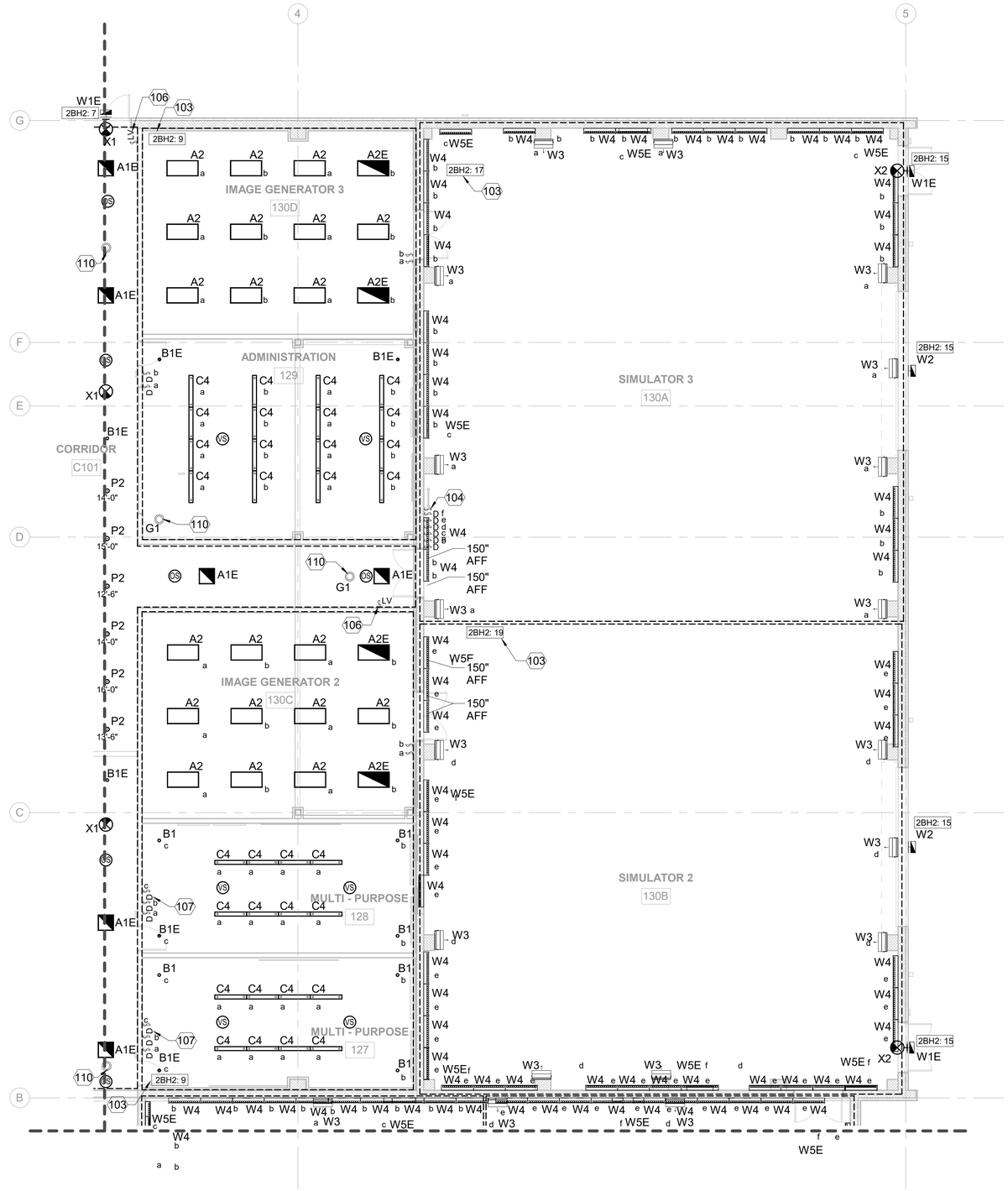

A1 LIGHTING PLAN - LEVEL 1 - AREA B

1/8" = 1'-0"

GENERAL NOTES - LIGHTING

A	REFER TO E-001 FOR GENERAL NOTES AND SYMBOLS.
B	REFER TO E-601 FOR LUMINAIRE SCHEDULE.
C	OCCUPANCY SENSOR LOCATIONS ARE SHOWN FOR GENERAL REFERENCE ONLY. REFER TO MANUFACTURER'S RECOMMENDATIONS FOR EXACT PLACEMENT AND QUANTITY FOR PROPER OPERATION.
D	PROVIDE PHOTOCELL ON THE ROOF FACING NORTH TO CONTROL EXTERIOR BUILDING MOUNTED LUMINAIRES.
E	PROVIDE OCCUPANCY SENSORS IN CORRIDORS INTERCONNECTED IN ORDER THAT WHEN ONE OCCUPANCY IS ACTIVATED IT TURNS THE CORRIDOR LIGHTING ON THROUGHOUT THE BUILDING 951B.

SHEET KEYNOTES

103	PROVIDE CIRCUIT INDICATED TO LIGHTING FIXTURES ENCLOSED WITHIN DASHED LINE.
104	PROVIDE SWITCH ADJACENT TO LADDER AND LABEL "MEZANINE LIGHTING".
106	PROVIDE BACK BOX AND BLANK COVER PLATE WITH CONDUIT UP TO CEILING SPACE FOR FUTURE LOW VOLTAGE SWITCH TO CONTROL RED BEACON STROBE FOR UNCLEARED VISITORS.
107	PROVIDE LOW VOLTAGE DIMMING WALL STATION FOR THREE ZONES A,B,C, CONTROLLED THROUGH SENSORS AND ROOM CONTROLLER.
110	CONNECT BEACON STROBES TYPE 'G1' FIXTURE THROUGHOUT THE FACILITY TO EXISTING CIRCUIT AND SWITCH IN BUILDING 951A PHASE 1 BEACONS.

KEY PLAN

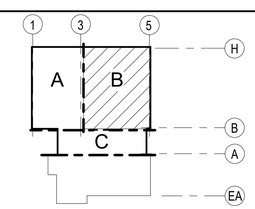

GRAPHIC SCALE

8 0 8 16

Scale: 1/8 INCH = 1 FOOT

PROJECT NORTH

PLAN NORTH

STATE OF TEXAS
AARON McWHORTER
100310
LICENSED
PROFESSIONAL ENGINEER
6.24.2021

US Army Corps of Engineers ®

MARK	DESCRIPTION	DATE

DESIGNED BY: A. MCWHORTER
DRAWN BY: S. WALCHER
CHECKED BY: V. MONTELLANO
SUBMITTED BY: E. FIZNESS
SIZE: ANSI D
ISSUE DATE: JUNE 2022
CONTRACT NO.: W912PP-22-R-0021
FILENAME: K469-951-EL112

US ARMY CORPS OF ENGINEERS
ALBUQUERQUE
ALBUQUERQUE, NEW MEXICO

JACOBS
JACOBS ENGINEERING GROUP INC.
777 Main Street
Fort Worth, TX 76102

COMBAT RESCUE HELICOPTER SIMULATOR FACILITY
KIRTLAND AIR FORCE BASE (AFB),
BERNALILLO COUNTY, NEW MEXICO

CRH SIMULATOR FACILITY ADAL

LIGHTING PLAN - LEVEL 1 - AREA B

SHEET ID
951B
EL112

READY TO ADVERTISE

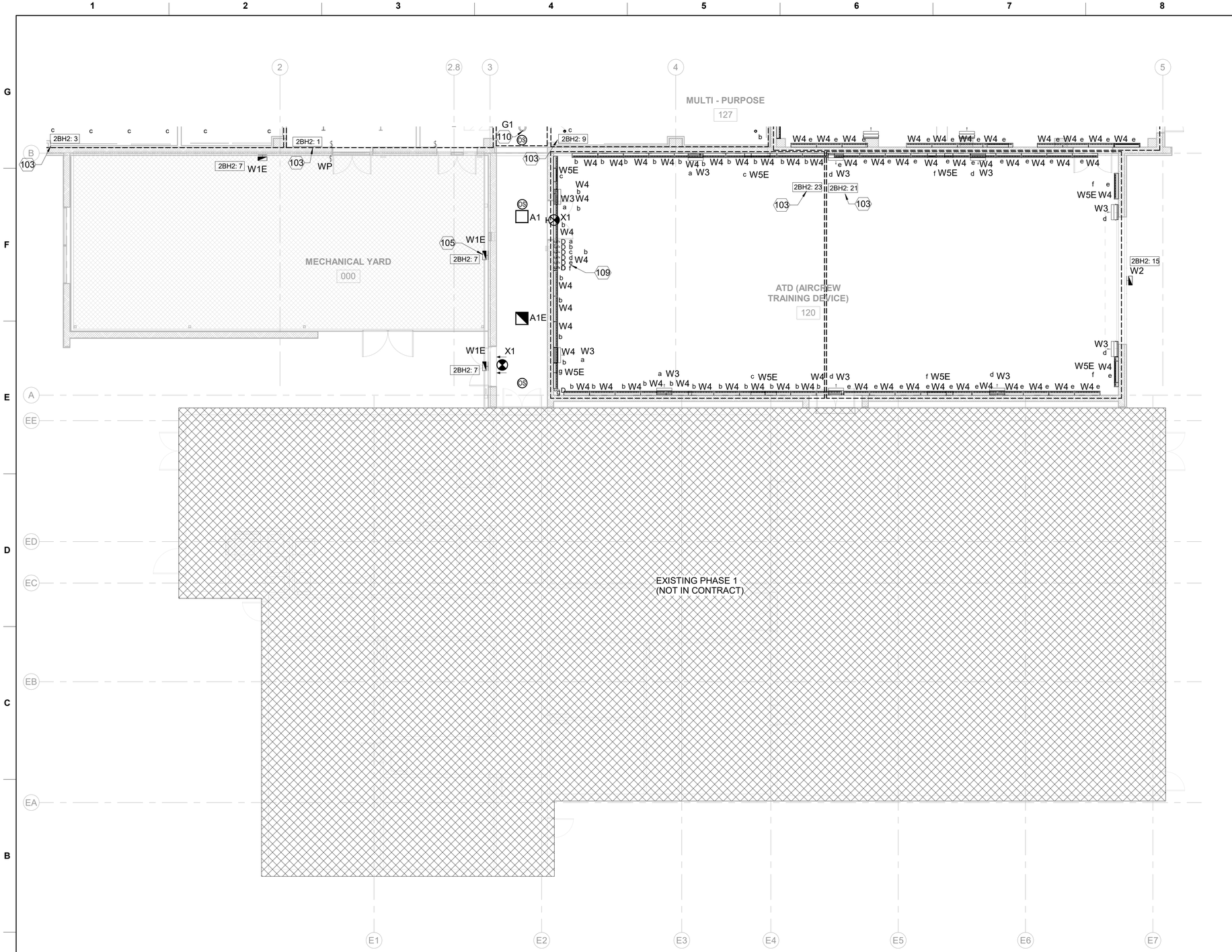

A1 LIGHTING PLAN - LEVEL 1 - AREA C
1/8" = 1'-0"

GENERAL NOTES - LIGHTING

A	REFER TO E-001 FOR GENERAL NOTES AND SYMBOLS.
B	REFER TO E-601 FOR LUMINAIRE SCHEDULE.
C	OCCUPANCY SENSOR LOCATIONS ARE SHOWN FOR GENERAL REFERENCE ONLY. REFER TO MANUFACTURER'S RECOMMENDATIONS FOR EXACT PLACEMENT AND QUANTITY FOR PROPER OPERATION.
D	PROVIDE PHOTOCELL ON THE ROOF FACING NORTH TO CONTROL EXTERIOR BUILDING MOUNTED LUMINAIRES.
E	PROVIDE OCCUPANCY SENSORS IN CORRIDORS INTERCONNECTED IN ORDER THAT WHEN ONE OCCUPANCY IS ACTIVATED IT TURNS THE CORRIDOR LIGHTING ON THROUGHOUT THE BUILDING 951B.

SHEET KEYNOTES

103	PROVIDE CIRCUIT INDICATED TO LIGHTING FIXTURES ENCLOSED WITHIN DASHED LINE.
105	REUSE EXISTING FIXTURES.
109	PROVIDE ZONED DIMMING LIGHITNG CONTROL.
110	CONNECT BEACON STROBES TYPE 'G1' FIXTURE THROUGHOUT THE FACILITY TO EXISTING CIRCUIT AND SWITCH IN BUILDING 951A PHASE 1 BEACONS.

KEY PLAN

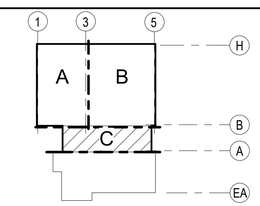

GRAPHIC SCALE

8 0 8 16
Scale: 1/8 INCH = 1 FOOT

PROJECT NORTH

PLAN NORTH

STATE OF TEXAS
AARON McWHORTER
100310
LICENSED PROFESSIONAL ENGINEER
6.24.2021

US Army Corps of Engineers ®

MARK	DESCRIPTION	DATE

DESIGNED BY: A. MCWHORTER
DRAWN BY: S. WALCHER
CHECKED BY: V. MONTELLANO
SUBMITTED BY: E. OLIVESS
SIZE: ANSI D
ISSUE DATE: JUNE 2022
CONTRACT NO.: W912PP-22-R-0021
FILENAME: K486-951-EL113

US ARMY CORPS OF ENGINEERS
ALBUQUERQUE
ALBUQUERQUE, NEW MEXICO

JACOBS
JACOBS ENGINEERING GROUP INC.
777 Main Street
Fort Worth, TX 76102

COMBAT RESCUE HELICOPTER SIMULATOR FACILITY
KIRTLAND AIR FORCE BASE (AFB),
BERNALILLO COUNTY, NEW MEXICO

CRH SIMULATOR FACILITY ADAL

LIGHTING PLAN - LEVEL 1 - AREA C

SHEET ID
951B
EL113

READY TO ADVERTISE

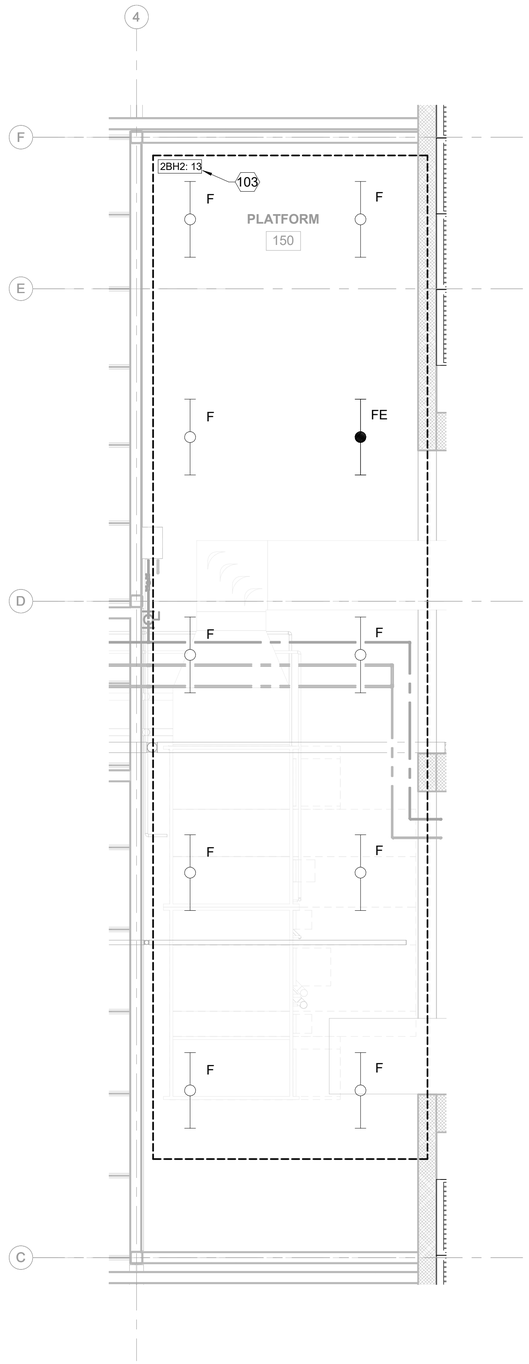

A1 LIGHTING PLAN - MEZZANINE

1/4" = 1'-0"

GENERAL NOTES - LIGHTING

A	REFER TO E-001 FOR GENERAL NOTES AND SYMBOLS.
B	REFER TO E-601 FOR LUMINAIRE SCHEDULE.
C	OCCUPANCY SENSOR LOCATIONS ARE SHOWN FOR GENERAL REFERENCE ONLY. REFER TO MANUFACTURER'S RECOMMENDATIONS FOR EXACT PLACEMENT AND QUANTITY FOR PROPER OPERATION.
D	PROVIDE PHOTOCELL ON THE ROOF FACING NORTH TO CONTROL EXTERIOR BUILDING MOUNTED LUMINAIRES.
E	PROVIDE OCCUPANCY SENSORS IN CORRIDORS INTERCONNECTED IN ORDER THAT WHEN ONE OCCUPANCY IS ACTIVATED IT TURNS THE CORRIDOR LIGHTING ON THROUGHOUT THE BUILDING 951B.

SHEET KEYNOTES

103	PROVIDE CIRCUIT INDICATED TO LIGHTING FIXTURES ENCLOSED WITHIN DASHED LINE.

KEY PLAN

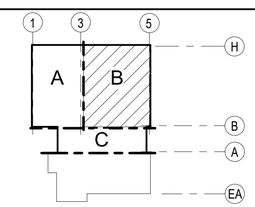

GRAPHIC SCALE

4 0 4 8

Scale: 1/4 INCH = 1 FOOT

PROJECT NORTH

PLAN NORTH

STATE OF TEXAS
AARON McWHORTER
100310
LICENSED PROFESSIONAL ENGINEER
6-24-2021

US Army Corps of Engineers ®

MARK	DESCRIPTION	DATE

US ARMY CORPS OF ENGINEERS
ALBUQUERQUE
ALBUQUERQUE, NEW MEXICO

JACOBS
JACOBS ENGINEERING GROUP INC.
777 Main Street
FORT WORTH, TX 76102

DESIGNED BY: A. MCWHORTER
DRAWN BY: S. WALCHER
CHECKED BY: V. MONTELLANO
SUBMITTED BY: E. OLMESS
SIZE: ANSI D
ISSUE DATE: JUNE 2022
CONTRACT NO.: W912PP-22-R-0021
FILENAME: K486-951-EL120

COMBAT RESCUE HELICOPTER SIMULATOR FACILITY
KIRTLAND AIR FORCE BASE (AFB),
BERNALILLO COUNTY, NEW MEXICO

CRH SIMULATOR FACILITY ADAL
LIGHTING PLAN - MEZZANINE

SHEET ID
951B
EL120

READY TO ADVERTISE

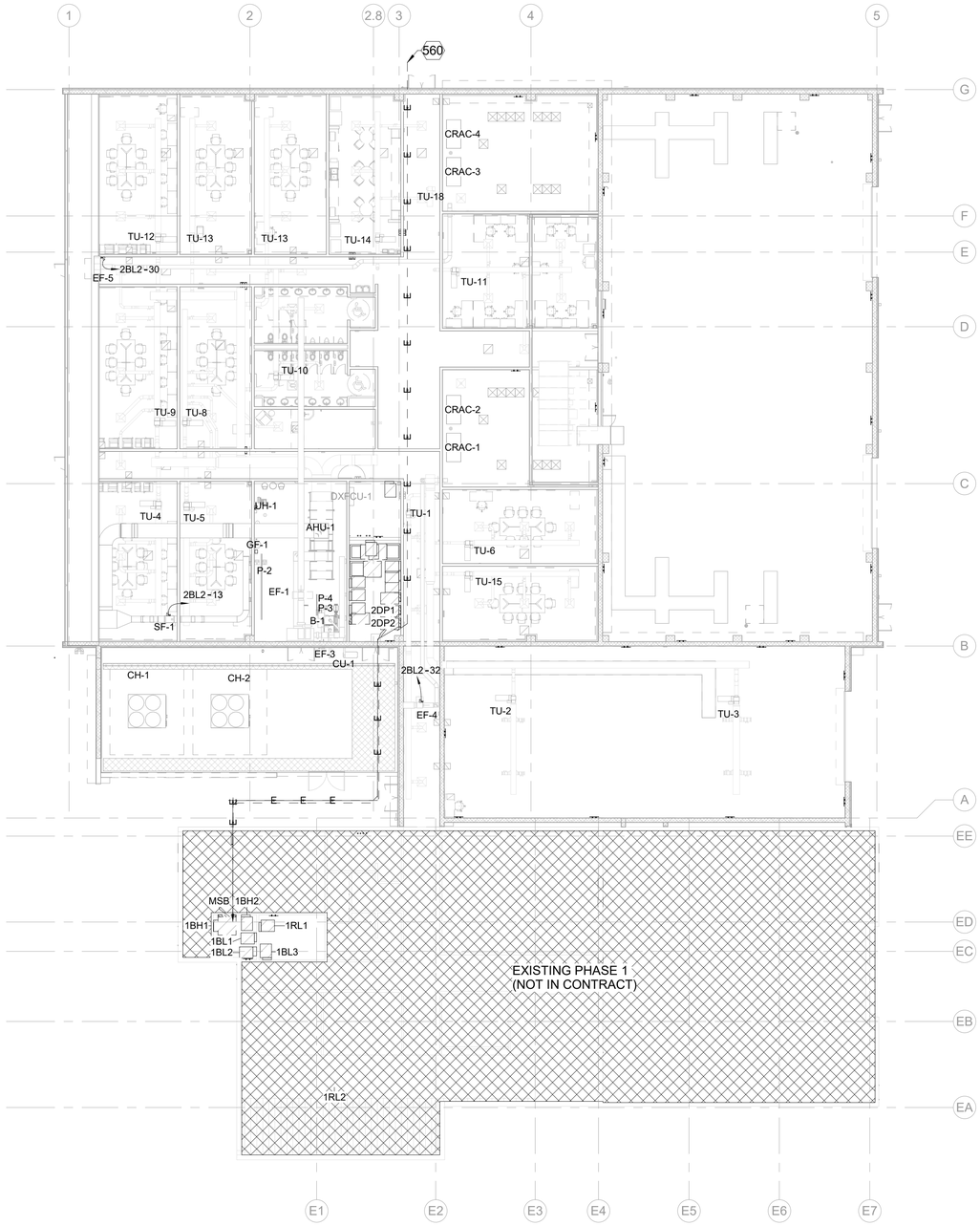

A1 POWER PLAN - LEVEL 1 - OVERALL

1/16" = 1'-0"

GENERAL NOTES - POWER

A	COORDINATE RECEPTACLE LAYOUT WITH TELECOMMUNICATIONS OUTLETS AND INTERIORS FURNITURE LAYOUT. REFER TO TELECOM PLANS AND INTERIORS PLANS. LOCATE RECEPTACLE TO MAINTAIN ACCESSIBILITY WITH FURNITURE. COORDINATE DATA REQUIREMENTS ON TELECOM PLANS. PROVIDE RECEPTACLE WITHIN 6" OF DATA OUTLETS.
B	COORDINATE MECHANICAL AND PLUMBING EQUIPMENT CONNECTIONS WITH MECHANICAL AND PLUMBING PLANS AND SCHEDULES.
C	COORDINATE TO CONTROL RECEPTACLES THROUGH LIGHTING OCCUPANCY SENSOR AND ROOM CONTROLLER. PROVIDE QUANTITY AND LOCATION ACCORDING TO MANUFACTURER'S RECOMMENDATIONS.
D	LABEL CONDUITS AND BOXES WITH RED LABEL WHITE TEXT FOR RED POWER AND PROVIDE BLACK LABEL WITH WHITE TEXT FOR BLACK POWER. PAINT COVER OF BOXES AND ALONG CONDUIT RUN EVERY 25FT.
E	REFER TO E-001 FOR GENERAL NOTES, SYMBOLS, AND ABBREVIATIONS.
F	REFER TO E-401 FOR MECHANICAL ROOM EQUIPMENT CIRCUITS.
G	PROVIDE MOTOR RATED SWITCH AND CIRCUIT FOR MOTORIZED DAMPERS FROM ASSOCIATED EXHAUST FAN CIRCUIT. COORDINATE WITH MECHANICAL PLANS.

SHEET KEYNOTES

560	PROVIDE (2) 2" SPARE CONDUITS FROM ELECTRICAL ROOM 138 AND STUB OUT INTO HANDHOLE 5FT OUTSIDE BUILDING FOOTPRINT FOR FUTURE.

KEY PLAN

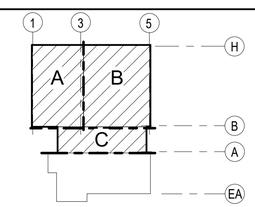

GRAPHIC SCALE

16 0 16 32

Scale: 1/16 INCH = 1 FOOT

PROJECT NORTH

PLAN NORTH

STATE OF TEXAS
AARON McWHORTER
100310
LICENSED
PROFESSIONAL ENGINEER
6.24.2021

US Army Corps of Engineers ®

MARK	DESCRIPTION	DATE

DESIGNED BY: A. MCWHORTER
DRAWN BY: S. WALCHER
CHECKED BY: V. MONTELLANO
SUBMITTED BY: E. OLMESS
SIZE: ANSI D
FILENAME: K486-951-EP110
ISSUE DATE: JUNE 2022
CONTRACT NO.: W912PP-22-R-0021

US ARMY CORPS OF ENGINEERS
ALBUQUERQUE
ALBUQUERQUE, NEW MEXICO

JACOBS
JACOBS ENGINEERING GROUP INC.
777 Main Street
Fort Worth, TX 76102

COMBAT RESCUE HELICOPTER SIMULATOR FACILITY
KIRTLAND AIR FORCE BASE (AFB),
BERNALILLO COUNTY, NEW MEXICO

CRH SIMULATOR FACILITY ADAL
POWER PLAN - LEVEL 1 - OVERALL

SHEET ID
951B
EP110

READY TO ADVERTISE

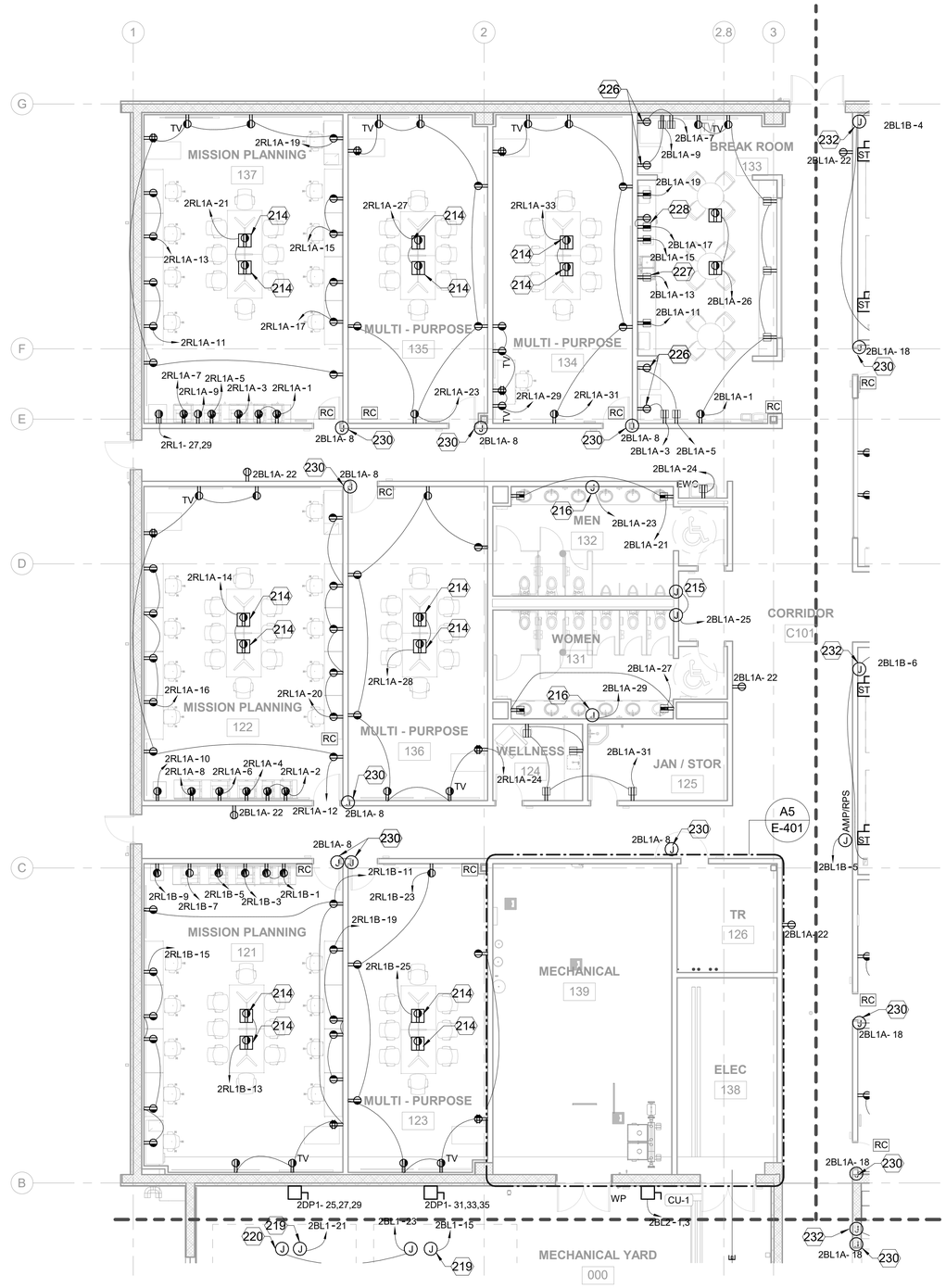

A1 POWER PLAN - LEVEL 1 - AREA A

1/8" = 1'-0"

GENERAL NOTES - POWER

A	COORDINATE RECEPTACLE LAYOUT WITH TELECOMMUNICATIONS OUTLETS AND INTERIORS FURNITURE LAYOUT. REFER TO TELECOM PLANS AND INTERIORS PLANS. LOCATE RECEPTACLE TO MAINTAIN ACCESSIBILITY WITH FURNITURE. COORDINATE DATA REQUIREMENTS ON TELECOM PLANS. PROVIDE RECEPTACLE WITHIN 6" OF DATA OUTLETS.
B	COORDINATE MECHANICAL AND PLUMBING EQUIPMENT CONNECTIONS WITH MECHANICAL AND PLUMBING PLANS AND SCHEDULES.
C	COORDINATE TO CONTROL RECEPTACLES THROUGH LIGHTING OCCUPANCY SENSOR AND ROOM CONTROLLER. PROVIDE QUANTITY AND LOCATION ACCORDING TO MANUFACTURER'S RECOMMENDATIONS.
D	LABEL CONDUITS AND BOXES WITH RED LABEL WHITE TEXT FOR RED POWER AND PROVIDE BLACK LABEL WITH WHITE TEXT FOR BLACK POWER. PAINT COVER OF BOXES AND ALONG CONDUIT RUN EVERY 25FT.
E	REFER TO E-001 FOR GENERAL NOTES, SYMBOLS, AND ABBREVIATIONS.
F	REFER TO E-401 FOR MECHANICAL ROOM EQUIPMENT CIRCUITS.
G	PROVIDE MOTOR RATED SWITCH AND CIRCUIT FOR MOTORIZED DAMPERS FROM ASSOCIATED EXHAUST FAN CIRCUIT. COORDINATE WITH MECHANICAL PLANS.

SHEET KEYNOTES

214	PROVIDE RECESSED MINIMUM 6-GANG FLOOR BOX WITH COMBINATION POWER AND DATA. PROVIDE QUAD 5-20R RECEPTACLE AND SPACE FOR DATA AND A/V. COORDINATE DATA REFER TO TELECOM PLANS. COORDINATE WITH ARCHITECTURAL AND INTERIORS FOR DIMENSIONS TO LOCATE BELOW TABLE.
215	PROVIDE 120V POWER CIRCUIT FOR TOILET FLUSH SENSORS.
216	PROVIDE 120V POWER CIRCUIT FOR SINK SENSORS.
219	PROVIDE 120V POWER CIRCUIT FOR CHILLER CONTROLS.
220	PROVIDE 120V POWER CIRCUIT FOR CHILLER HEAT TRACE.
226	PROVIDE REFRIGERATOR RECEPTACLE CONNECTED TO LOAD SIDE OF GFCI DEVICE.
227	PROVIDE DISHWASHER GFCI RECEPTACLE BELOW SINK FOR ACCESIBILITY.
228	PROVIDE ICE MACHINE RECEPTACLE CONNECTED TO LOAD SIDE OF GFCI DEVICE ABOVE COUNTER.
230	PROVIDE CIRCUIT CONNECTION TO SECURITY ELECTRONIC LOCK SYSTEM. COORDINATE WITH FINAL SECURITY SYSTEM SUBMITTAL MANUFACTURER REQUIREMENTS.
232	PROVIDE CIRCUIT CONNECTION TO FIRE SMOKE DAMPER.

KEY PLAN

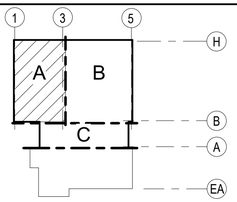

GRAPHIC SCALE

8 0 8 16

Scale: 1/8 INCH = 1 FOOT

PROJECT NORTH

PLAN NORTH

STATE OF TEXAS
AARON McWHORTER
100310
LICENSED
PROFESSIONAL ENGINEER
6.24.2021

US Army Corps of Engineers ®

MARK	DESCRIPTION	DATE

ISSUE DATE: JUNE 2022
CONTRACT NO.: W912PP-22-R-0021

DESIGNED BY: A. MCWHORTER
DRAWN BY: S. WALCHER
CHECKED BY: V. MONTELLANO
SUBMITTED BY: E. OLNESS
SIZE: ANSI D
FILENAME: KA969-951-EP111

US ARMY CORPS OF ENGINEERS
ALBUQUERQUE
ALBUQUERQUE, NEW MEXICO

JACOBS
JACOBS ENGINEERING GROUP INC.
777 Main Street
Fort Worth, Texas 76102

COMBAT RESCUE HELICOPTER SIMULATOR FACILITY
KIRTLAND AIR FORCE BASE (AFB),
BERNALILLO COUNTY, NEW MEXICO

CRH SIMULATOR FACILITY ADAL
POWER PLAN - LEVEL 1 - AREA A

SHEET ID
951B
EP111

READY TO ADVERTISE

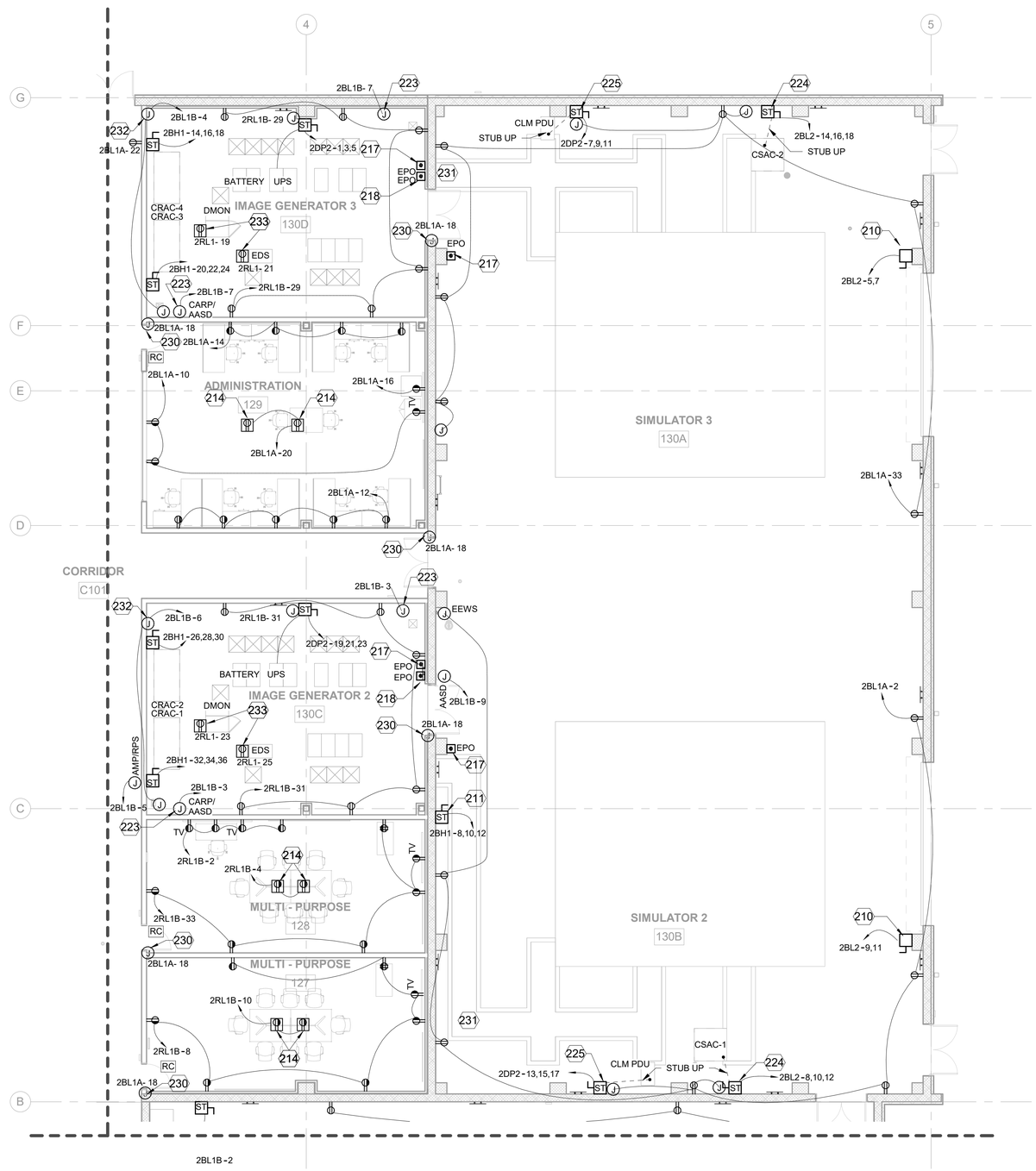

A1 POWER PLAN - LEVEL 1 - AREA B

1/8" = 1'-0"

SHEET KEYNOTES

210	PROVIDE CIRCUIT AND DISCONNECT FOR OVERHEAD ROLL-UP DOOR. COORDINATE AND INSTALL PUSH BUTTON CONTROL WITH MANUFACTURER AND DOOR INSTALLER. COORDINATE POWER REQUIREMENTS WITH FINAL SELECTED MANUFACTURER TO SUPPLY 208V SINGLE PHASE.
211	PROVIDE CIRCUIT AND DISCONNECT FOR OVERHEAD CRANE. PROVIDE RELAY CONNECTION FROM THE CRANE CONTROLLER TO EACH OF THE SIMULATOR CLM PDU MOTION CONTROLLERS. COORDINATE LOCATION AND REQUIREMENTS WITH MANUFACTURER AND INSTALLER TO CONNECT TO CRANE CONTROLLER AND ANCILLARY COMPONENTS FOR A COMPLETE INSTALLATION.
214	PROVIDE RECESSED MINIMUM 6-GANG FLOOR BOX WITH COMBINATION POWER AND DATA. PROVIDE QUAD 5-20R RECEPTACLE AND SPACE FOR DATA AND A/V. COORDINATE DATA REFER TO TELECOM PLANS. COORDINATE WITH ARCHITECTURAL AND INTERIORS FOR DIMENSIONS TO LOCATE BELOW TABLE.
217	PROVIDE EMERGENCY POWER OFF BUTTON WITH PROTECTIVE COVER TO POWER DOWN THE SIMULATOR MOTION GENERATOR CABINET AND UPS. PROVIDE CONTACTORS TO SHUNT MULTIPLE CIRCUITS.
218	PROVIDE EMERGENCY POWER OFF BUTTONS WITH PROTECTIVE COVER TO POWER DOWN HVAC CRAC UNITS. PROVIDE CONTACTORS TO SHUNT MULTIPLE CIRCUITS.
223	PROVIDE CIRCUIT FOR FIRE ALARM CONTROL EQUIPMENT. COORDINATE WITH SIMULATOR MANUFACTURER AND THE FIRE PROTECTION DRAWINGS.
224	PROVIDE SHUNT TRIP ENCLOSED CIRCUIT BREAKER AND CIRCUIT CONNECTION TO SIMULATOR COCKPIT AIR UNIT. COORDINATE REQUIREMENTS AND LOCATION WITH CONTRACTING OFFICER AND SIMULATOR MANUFACTURER INSPECTION. PROVIDE EMERGENCY POWER OFF BUTTON BUTTON TO DISCONNECT POWER TO THE COCKPIT AIR AND THE MOTION CABINET. ROUTE CONDUIT UNDER FLOOR AND STUB UP AT UNIT.
225	PROVIDE SHUNT TRIP ENCLOSED CIRCUIT BREAKER AND CIRCUIT CONNECTION TO SIMULATOR MOTION CABINET. COORDINATE REQUIREMENTS AND LOCATION WITH CONTRACTING OFFICER AND SIMULATOR MANUFACTURER INSPECTION. PROVIDE EMERGENCY POWER OFF BUTTON BUTTON TO DISCONNECT POWER TO THE COCKPIT AIR AND THE MOTION CABINET. ROUTE CONDUIT UNDER FLOOR AND STUB UP AT UNIT.
230	PROVIDE CIRCUIT CONNECTION TO SECURITY ELECTRONIC LOCK SYSTEM. COORDINATE WITH FINAL SECURITY SYSTEM SUBMITTAL MANUFACTURER REQUIREMENTS.
231	PROVIDE 6-6" CONDUIT SLEEVES FROM TRENCH TO IMAGE GENERATOR ROOM BELOW RAISED FLOOR. SEAL PENETRATIONS FOR FIRE RATING.
232	PROVIDE CIRCUIT CONNECTION TO FIRE SMOKE DAMPER.
233	PROVIDE RAISED FLOOR SINGLE DUPLEX RECEPTACLE FLOOR BOX.

GENERAL NOTES - POWER

A	COORDINATE RECEPTACLE LAYOUT WITH TELECOMMUNICATIONS OUTLETS AND INTERIORS FURNITURE LAYOUT. REFER TO TELECOM PLANS AND INTERIORS PLANS. LOCATE RECEPTACLE TO MAINTAIN ACCESSIBILITY WITH FURNITURE. COORDINATE DATA REQUIREMENTS ON TELECOM PLANS. PROVIDE RECEPTACLE WITHIN 6" OF DATA OUTLETS.
B	COORDINATE MECHANICAL AND PLUMBING EQUIPMENT CONNECTIONS WITH MECHANICAL AND PLUMBING PLANS AND SCHEDULES.
C	COORDINATE TO CONTROL RECEPTACLES THROUGH LIGHTING OCCUPANCY SENSOR AND ROOM CONTROLLER. PROVIDE QUANTITY AND LOCATION ACCORDING TO MANUFACTURER'S RECOMMENDATIONS.
D	LABEL CONDUITS AND BOXES WITH RED LABEL WHITE TEXT FOR RED POWER AND PROVIDE BLACK LABEL WITH WHITE TEXT FOR BLACK POWER. PAINT COVER OF BOXES AND ALONG CONDUIT RUN EVERY 25FT.
E	REFER TO E-001 FOR GENERAL NOTES, SYMBOLS, AND ABBREVIATIONS.
F	REFER TO E-401 FOR MECHANICAL ROOM EQUIPMENT CIRCUITS.
G	PROVIDE MOTOR RATED SWITCH AND CIRCUIT FOR MOTORIZED DAMPERS FROM ASSOCIATED EXHAUST FAN CIRCUIT. COORDINATE WITH MECHANICAL PLANS.

KEY PLAN

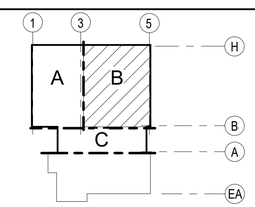

GRAPHIC SCALE

8 0 8 16

Scale: 1/8 INCH = 1 FOOT

PROJECT NORTH

PLAN NORTH

STATE OF TEXAS
AARON McWHORTER
100310
LICENSED
PROFESSIONAL ENGINEER
6-24-2021

US Army Corps of Engineers ®

MARK	DESCRIPTION	DATE

DESIGNED BY: A. MCWHORTER
DRAWN BY: S. WALCHER
CHECKED BY: V. MONTELLANO
SUBMITTED BY: E. OLNESS
ANSI D

ISSUE DATE: JUNE 2022
CONTRACT NO.: W912PP-22-R-0021
FILENAME: K4A9-951-EP112

US ARMY CORPS OF ENGINEERS
ALBUQUERQUE
ALBUQUERQUE, NEW MEXICO

JACOBS
JACOBS ENGINEERING GROUP INC.
777 Main Street
Fort Worth, TX 76102

COMBAT RESCUE HELICOPTER SIMULATOR FACILITY
KIRTLAND AIR FORCE BASE (AFB),
BERNALILLO COUNTY, NEW MEXICO

CRH SIMULATOR FACILITY ADAL
POWER PLAN - LEVEL 1 - AREA B

SHEET ID
951B
EP112

READY TO ADVERTISE

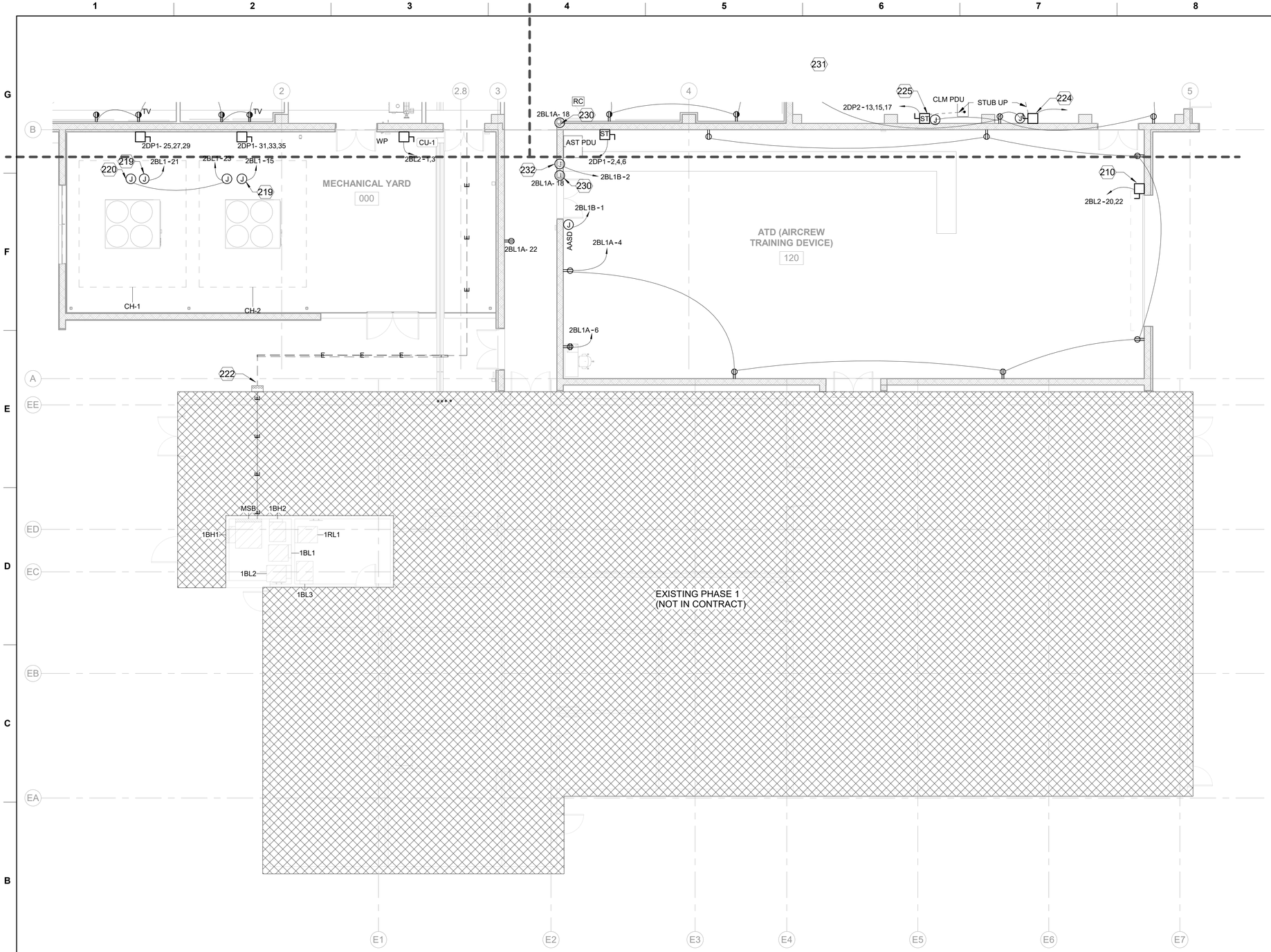

A1 POWER PLAN - LEVEL 1 - AREA C

1/8" = 1'-0"

GENERAL NOTES - POWER

A	COORDINATE RECEPTACLE LAYOUT WITH TELECOMMUNICATIONS OUTLETS AND INTERIORS FURNITURE LAYOUT. REFER TO TELECOM PLANS AND INTERIORS PLANS. LOCATE RECEPTACLE TO MAINTAIN ACCESSIBILITY WITH FURNITURE. COORDINATE DATA REQUIREMENTS ON TELECOM PLANS. PROVIDE RECEPTACLE WITHIN 6" OF DATA OUTLETS.
B	COORDINATE MECHANICAL AND PLUMBING EQUIPMENT CONNECTIONS WITH MECHANICAL AND PLUMBING PLANS AND SCHEDULES.
C	COORDINATE TO CONTROL RECEPTACLES THROUGH LIGHTING OCCUPANCY SENSOR AND ROOM CONTROLLER. PROVIDE QUANTITY AND LOCATION ACCORDING TO MANUFACTURER'S RECOMMENDATIONS.
D	LABEL CONDUITS AND BOXES WITH RED LABEL WHITE TEXT FOR RED POWER AND PROVIDE BLACK LABEL WITH WHITE TEXT FOR BLACK POWER. PAINT COVER OF BOXES AND ALONG CONDUIT RUN EVERY 25FT.
E	REFER TO E-001 FOR GENERAL NOTES, SYMBOLS, AND ABBREVIATIONS.
F	REFER TO E-401 FOR MECHANICAL ROOM EQUIPMENT CIRCUITS.
G	PROVIDE MOTOR RATED SWITCH AND CIRCUIT FOR MOTORIZED DAMPERS FROM ASSOCIATED EXHAUST FAN CIRCUIT. COORDINATE WITH MECHANICAL PLANS.

SHEET KEYNOTES

210	PROVIDE CIRCUIT AND DISCONNECT FOR OVERHEAD ROLL-UP DOOR. COORDINATE AND INSTALL PUSH BUTTON CONTROL WITH MANUFACTURER AND DOOR INSTALLER. COORDINATE POWER REQUIREMENTS WITH FINAL SELECTED MANUFACTURER TO SUPPLY 208V SINGLE PHASE.
214	PROVIDE RECESSED MINIMUM 6-GANG FLOOR BOX WITH COMBINATION POWER AND DATA. PROVIDE QUAD 5-20R RECEPTACLE AND SPACE FOR DATA AND A/V. COORDINATE DATA REFER TO TELECOM PLANS. COORDINATE WITH ARCHITECTURAL AND INTERIORS FOR DIMENSIONS TO LOCATE BELOW TABLE.
219	PROVIDE 120V POWER CIRCUIT FOR CHILLER CONTROLS.
220	PROVIDE 120V POWER CIRCUIT FOR CHILLER HEAT TRACE.
222	PROVIDE CONCRETE ENCASED FEEDERS 20 INCHES BELOW GRADE WITH WARNING TAPE ABOVE DUCTS FROM EXISTING MSB TO NEW DISTRIBUTION PANELS. COORDINATE WITH STRUCTURAL GRADE BEAM AND FOOTING. REFER TO E-701 ONE-LINE DIAGRAM. PROVIDE ADDITIONAL (2) 2" SPARE CONDUITS WITH PULL STRING FOR FUTURE.
224	PROVIDE SHUNT TRIP ENCLOSED CIRCUIT BREAKER AND CIRCUIT CONNECTION TO SIMULATOR COCKPIT AIR UNIT. COORDINATE REQUIREMENTS AND LOCATION WITH CONTRACTING OFFICER AND SIMULATOR MANUFACTURER INSPECTION. PROVIDE EMERGENCY POWER OFF BUTTON BUTTON TO DISCONNECT POWER TO THE COCKPIT AIR AND THE MOTION CABINET. ROUTE CONDUIT UNDER FLOOR AND STUB UP AT UNIT.
225	PROVIDE SHUNT TRIP ENCLOSED CIRCUIT BREAKER AND CIRCUIT CONNECTION TO SIMULATOR MOTION CABINET. COORDINATE REQUIREMENTS AND LOCATION WITH CONTRACTING OFFICER AND SIMULATOR MANUFACTURER INSPECTION. PROVIDE EMERGENCY POWER OFF BUTTON BUTTON TO DISCONNECT POWER TO THE COCKPIT AIR AND THE MOTION CABINET. ROUTE CONDUIT UNDER FLOOR AND STUB UP AT UNIT.
230	PROVIDE CIRCUIT CONNECTION TO SECURITY ELECTRONIC LOCK SYSTEM. COORDINATE WITH FINAL SECURITY SYSTEM SUBMITTAL MANUFACTURER REQUIREMENTS.
231	PROVIDE 6-6" CONDUIT SLEEVES FROM TRENCH TO IMAGE GENERATOR ROOM BELOW RAISED FLOOR. SEAL PENETRATIONS FOR FIRE RATING.
232	PROVIDE CIRCUIT CONNECTION TO FIRE SMOKE DAMPER.

KEY PLAN

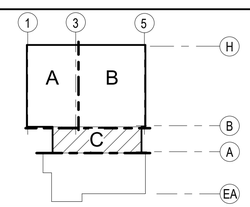

GRAPHIC SCALE

8 0 8 16

Scale: 1/8 INCH = 1 FOOT

PROJECT NORTH

PLAN NORTH

STATE OF TEXAS
AARON McWHORTER
100310
LICENSED PROFESSIONAL ENGINEER
6-24-2021

US Army Corps of Engineers ®

MARK	DESCRIPTION	DATE

DESIGNED BY: A. MCWHORTER
DRAWN BY: S. WALCHER
CHECKED BY: V. MONTELLANO
SUBMITTED BY: E. CLINESS
ANSI D

ISSUE DATE: JUNE 2022
CONTRACT NO.: W912PP-22-R-0021
FILENAME: K486-951-EP113

US ARMY CORPS OF ENGINEERS
ALBUQUERQUE
ALBUQUERQUE, NEW MEXICO

JACOBS
JACOBS ENGINEERING GROUP INC.
777 Main Street
Fort Worth, TX 76102

COMBAT RESCUE HELICOPTER SIMULATOR FACILITY
KIRTLAND AIR FORCE BASE (AFB),
BERNALILLO COUNTY, NEW MEXICO

CRH SIMULATOR FACILITY ADAL
POWER PLAN - LEVEL 1 - AREA C

SHEET ID
951B
EP113

READY TO ADVERTISE

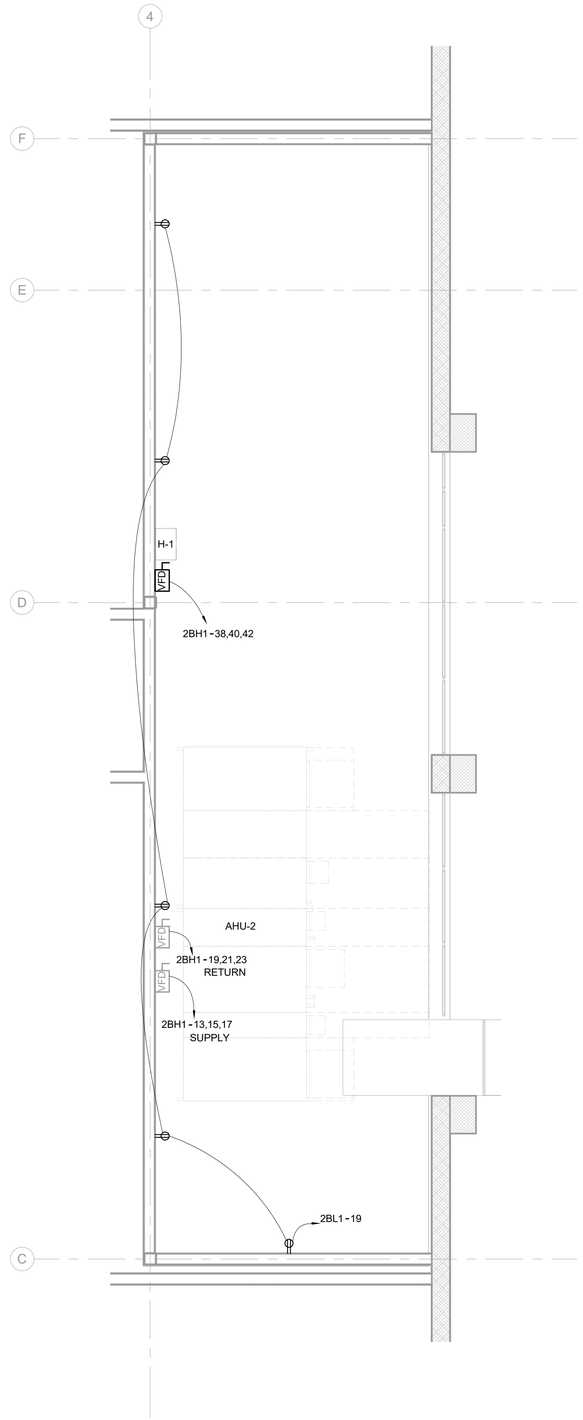

A1 POWER PLAN - MEZZANINE

1/4" = 1'-0"

GENERAL NOTES - POWER

A	COORDINATE RECEPTACLE LAYOUT WITH TELECOMMUNICATIONS OUTLETS AND INTERIORS FURNITURE LAYOUT. REFER TO TELECOM PLANS AND INTERIORS PLANS. LOCATE RECEPTACLE TO MAINTAIN ACCESSIBILITY WITH FURNITURE. COORDINATE DATA REQUIREMENTS ON TELECOM PLANS. PROVIDE RECEPTACLE WITHIN 6" OF DATA OUTLETS.
B	COORDINATE MECHANICAL AND PLUMBING EQUIPMENT CONNECTIONS WITH MECHANICAL AND PLUMBING PLANS AND SCHEDULES.
C	COORDINATE TO CONTROL RECEPTACLES THROUGH LIGHTING OCCUPANCY SENSOR AND ROOM CONTROLLER. PROVIDE QUANTITY AND LOCATION ACCORDING TO MANUFACTURER'S RECOMMENDATIONS.
D	LABEL CONDUITS AND BOXES WITH RED LABEL WHITE TEXT FOR RED POWER AND PROVIDE BLACK LABEL WITH WHITE TEXT FOR BLACK POWER. PAINT COVER OF BOXES AND ALONG CONDUIT RUN EVERY 25FT.
E	REFER TO E-001 FOR GENERAL NOTES, SYMBOLS, AND ABBREVIATIONS.
F	REFER TO E-401 FOR MECHANICAL ROOM EQUIPMENT CIRCUITS.
G	PROVIDE MOTOR RATED SWITCH AND CIRCUIT FOR MOTORIZED DAMPERS FROM ASSOCIATED EXHAUST FAN CIRCUIT. COORDINATE WITH MECHANICAL PLANS.

KEY PLAN

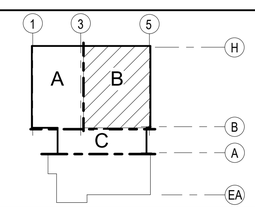

GRAPHIC SCALE

4 0 4 8

Scale: 1/4 INCH = 1 FOOT

PROJECT NORTH

PLAN NORTH

STATE OF TEXAS
AARON McWHORTER
100310
LICENSED PROFESSIONAL ENGINEER
6.24.2021

US Army Corps of Engineers ®

MARK	DESCRIPTION	DATE

US ARMY CORPS OF ENGINEERS
ALBUQUERQUE
ALBUQUERQUE, NEW MEXICO

JACOBS
JACOBS ENGINEERING GROUP INC.
777 Main Street
Fort Worth, TX 76102

DESIGNED BY: A. MCWHORTER
DRAWN BY: S. WALCHER
CHECKED BY: V. MONTELLANO
SUBMITTED BY: E. OLMESS
SIZE: ANSI D
ISSUE DATE: JUNE 2022
CONTRACT NO. : W912PP-22-R-0021
FILENAME: K486-951-EP120

COMBAT RESCUE HELICOPTER SIMULATOR FACILITY
KIRTLAND AIR FORCE BASE (AFB),
BERNALILLO COUNTY, NEW MEXICO

CRH SIMULATOR FACILITY ADAL
POWER PLAN - MEZZANINE

SHEET ID
951B
EP120

READY TO ADVERTISE

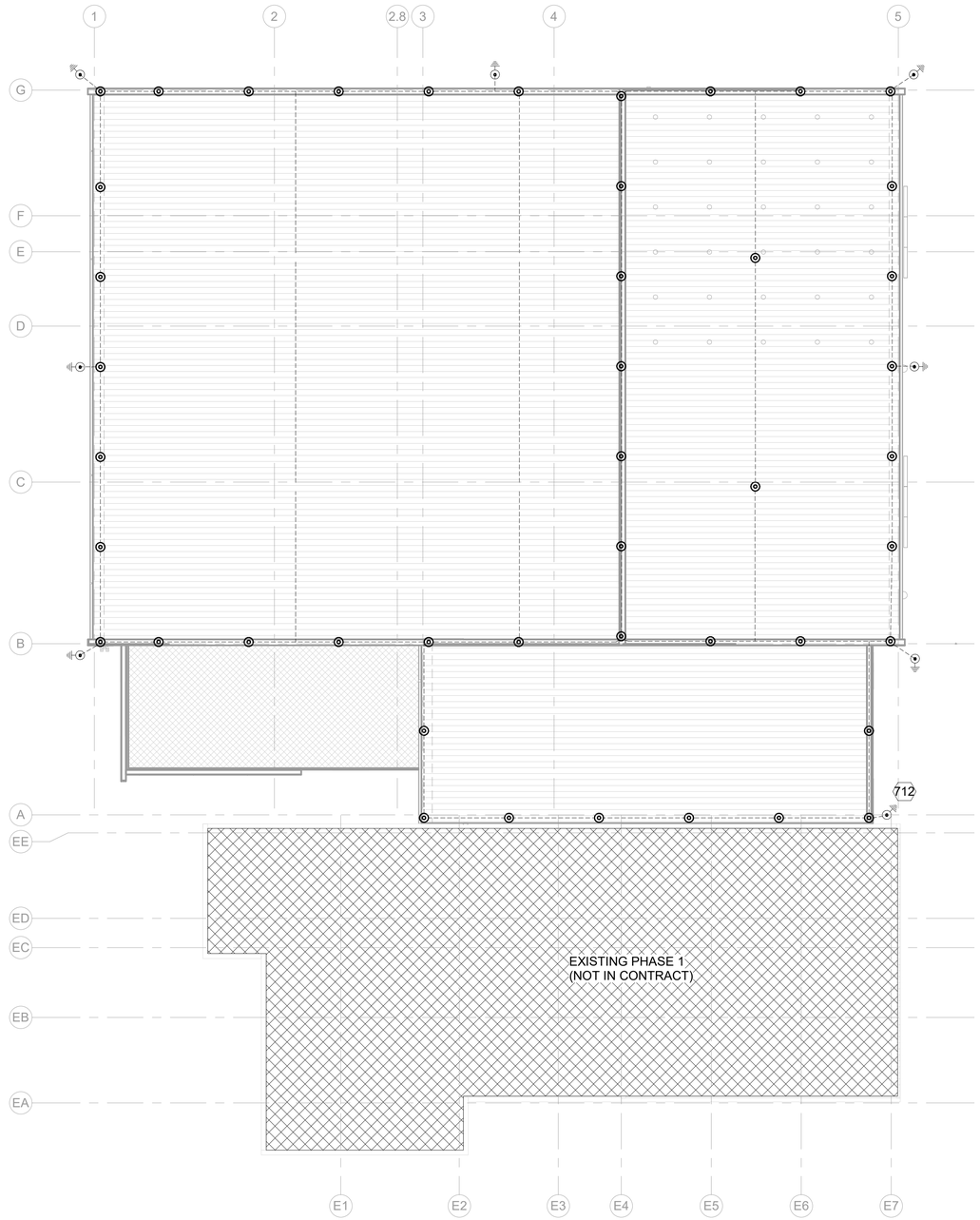

A1 LIGHTNING PROTECTION PLAN
1/16" = 1'-0"

GENERAL NOTES - LIGHTNING PROTECTION

A	PROVIDE LIGHTNING PROTECTION SYSTEM IN ACCORDANCE WITH AFI 32-1065 AND NFPA 780. PROVIDE THIRD PARTY INSPECTION AND CERTIFICATION.
B	PROVIDE CONCEALED COPPER #4/0 DOWN CONDUCTORS IN EXTERIOR OF BUILDING WALL IN CONDUIT.
C	PROVIDE CONNECTION AND BONDING TO THE EXISTING LIGHTNING PROTECTION SYSTEM AND GROUND LOOP.
D	PROVIDE ROOF LIGHTNING CONDUCTORS #4/0 ALUMINIUM TO COORDINATE WITH METALLIC ROOF.

SHEET KEYNOTES

712	CONNECT NEW LIGHTNING PROTECTION SYSTEM TO EXTISTING SYSTEM.

KEY PLAN

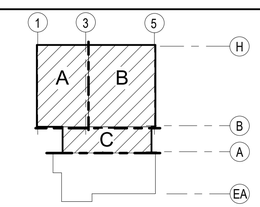

GRAPHIC SCALE

16 0 16 32
Scale: 1/16 INCH = 1 FOOT

PROJECT NORTH

PLAN NORTH

STATE OF TEXAS
AARON McWHORTER
100310
LICENSED
PROFESSIONAL ENGINEER
6.24.2021

US Army Corps of Engineers ®

MARK	DESCRIPTION	DATE

US ARMY CORPS OF ENGINEERS
ALBUQUERQUE
ALBUQUERQUE, NEW MEXICO

JACOBS
JACOBS ENGINEERING GROUP INC.
777 Main Street
FORT WORTH, TX 76102

DESIGNED BY: A. MCWHORTER
DRAWN BY: S. WALCHER
CHECKED BY: V. MONTELLANO
SUBMITTED BY: E. OLMESS
SIZE: ANSI D
ISSUE DATE: JUNE 2022
CONTRACT NO. : W912PP-22-R-0021
FILENAME: K486-951-EP140

COMBAT RESCUE HELICOPTER SIMULATOR FACILITY
KIRTLAND AIR FORCE BASE (AFB)
BERNALILLO COUNTY, NEW MEXICO

CRH SIMULATOR FACILITY ADAL
LIGHTNING PROTECTION PLAN

SHEET ID
951B
EP140

READY TO ADVERTISE

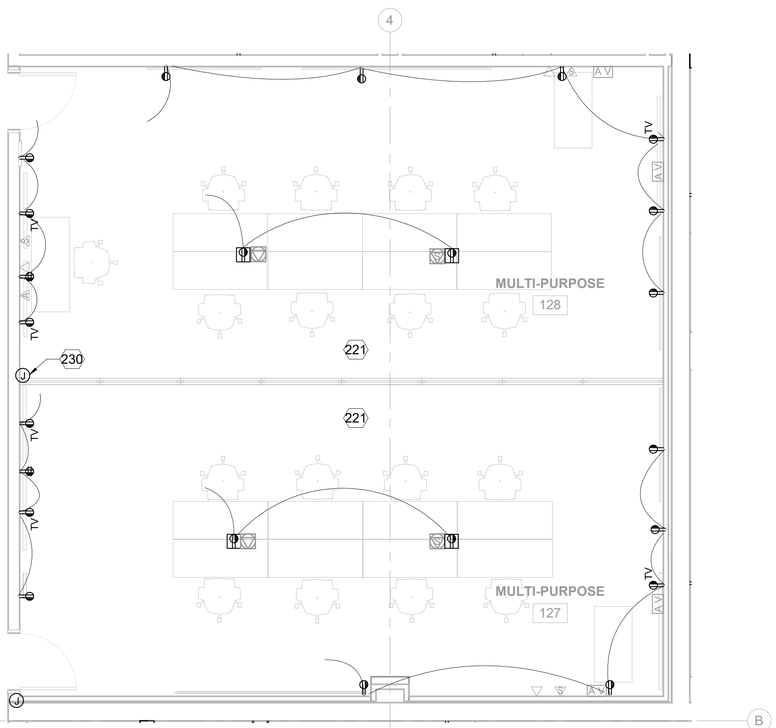

A1 ENLARGED POWER PLAN - BID OPTION
1/4" = 1'-0"

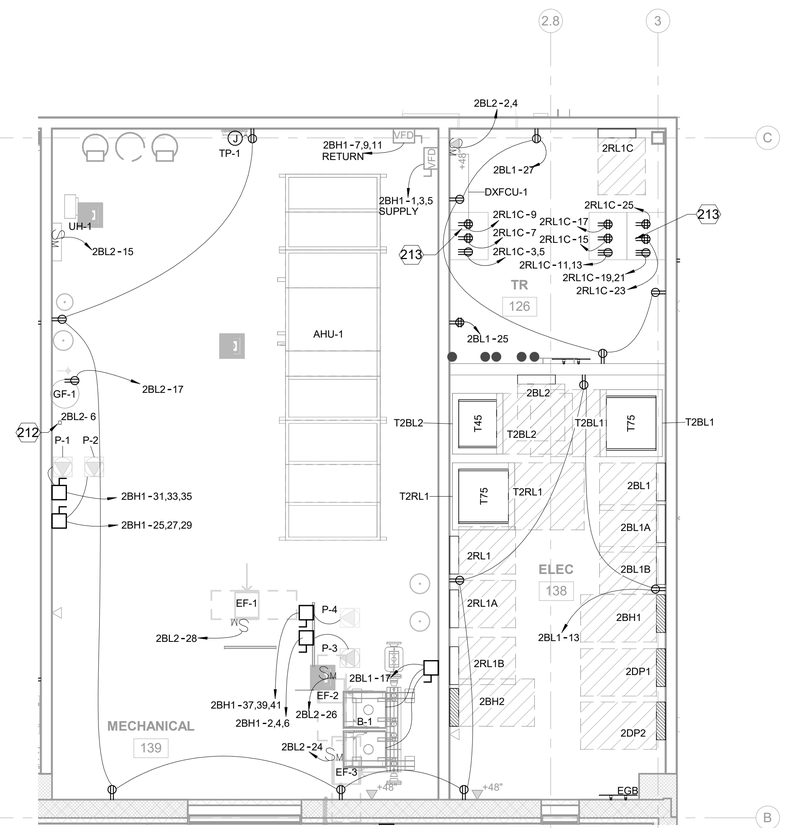

A5 ENLARGED POWER PLAN - ELEC 138, MECH 139, TR 126
1/4" = 1'-0"

GENERAL NOTES - POWER

A	COORDINATE RECEPTACLE LAYOUT WITH TELECOMMUNICATIONS OUTLETS AND INTERIORS FURNITURE LAYOUT. REFER TO TELECOM PLANS AND INTERIORS PLANS. LOCATE RECEPTACLE TO MAINTAIN ACCESSIBILITY WITH FURNITURE. COORDINATE DATA REQUIREMENTS ON TELECOM PLANS. PROVIDE RECEPTACLE WITHIN 6" OF DATA OUTLETS.
B	COORDINATE MECHANICAL AND PLUMBING EQUIPMENT CONNECTIONS WITH MECHANICAL AND PLUMBING PLANS AND SCHEDULES.
C	COORDINATE TO CONTROL RECEPTACLES THROUGH LIGHTING OCCUPANCY SENSOR AND ROOM CONTROLLER. PROVIDE QUANTITY AND LOCATION ACCORDING TO MANUFACTURER'S RECOMMENDATIONS.
D	LABEL CONDUITS AND BOXES WITH RED LABEL WHITE TEXT FOR RED POWER AND PROVIDE BLACK LABEL WITH WHITE TEXT FOR BLACK POWER. PAINT COVER OF BOXES AND ALONG CONDUIT RUN EVERY 25FT.
E	REFER TO E-001 FOR GENERAL NOTES, SYMBOLS, AND ABBREVIATIONS.
F	REFER TO E-401 FOR MECHANICAL ROOM EQUIPMENT CIRCUITS.
G	PROVIDE MOTOR RATED SWITCH AND CIRCUIT FOR MOTORIZED DAMPERS FROM ASSOCIATED EXHAUST FAN CIRCUIT. COORDINATE WITH MECHANICAL PLANS.

SHEET KEYNOTES

212	PROVIDE CIRCUIT CONNECTION TO BAS/DDC CONTROLLER AND VAV/TU BOXES. PROVIDE SPDT SWITCHES AT EACH VAV/TU. COORDINATE SYSTEM REQUIREMENTS WITH MECHANICAL PLANS AND FINAL SYSTEM SUBMITTAL.
213	COORDINATE RECEPTACLE LAYOUT WITH TELECOMMUNICATION ROOM EQUIPMENT AND RACKS TO MEET TELECOM REQUIREMENTS. PROVIDE RECEPTACLES AT RACKS AS TWIST LOCK TYPE L5-20R.
221	CIRCUIT RECEPTACLES AS SHOWN IN BASE BID. RE: EP112.
230	PROVIDE CIRCUIT CONNECTION TO SECURITY ELECTRONIC LOCK SYSTEM. COORDINATE WITH FINAL SECURITY SYSTEM SUBMITTAL MANUFACTURER REQUIREMENTS.

KEY PLAN

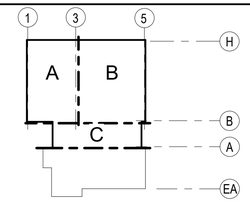

GRAPHIC SCALE

4 0 4 8
Scale: 1/4 INCH = 1 FOOT

PROJECT NORTH

PLAN NORTH

STATE OF TEXAS
AARON McWHORTER
100310
LICENSED PROFESSIONAL ENGINEER
6.24.2021

US Army Corps of Engineers ®

MARK	DESCRIPTION	DATE

DESIGNED BY: A. MOWHORTER
DRAWN BY: S. WALCHER
CHECKED BY: V. MONTELLANO
SUBMITTED BY: E. CLINESS
ISSUE DATE: JUNE 2022
CONTRACT NO.: W912PP-22-R-0021
FILENAME: K468-951-E-401
ANSI D

US ARMY CORPS OF ENGINEERS
ALBUQUERQUE
ALBUQUERQUE, NEW MEXICO

JACOBS
JACOBS ENGINEERING GROUP INC.
777 Main Street
Fort Worth, TX 76102

COMBAT RESCUE HELICOPTER SIMULATOR FACILITY
KIRTLAND AIR FORCE BASE (AFB),
BERNALILLO COUNTY, NEW MEXICO

CRH SIMULATOR FACILITY ADAL
ENLARGED POWER PLANS

SHEET ID
951B
E-401

READY TO ADVERTISE

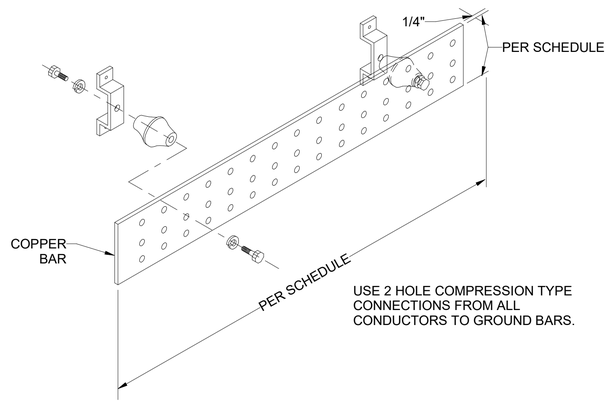

E1 GROUND BAR INSTALLATION
NTS

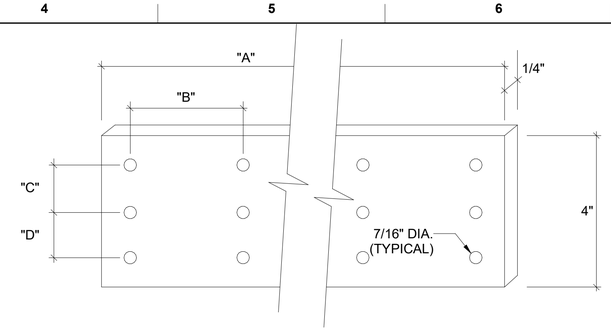

GROUND BAR DIMENSIONS					
BUS BAR	A	B	C	D	PART NO. (1)
EGB	24"	2"	3/4"	1"	GBIT14424C
GB	24"	2"	3/4"	1"	GBIT14424G

(1) AS MANUFACTURED BY HARGER LIGHTNING PROTECTION, INC. OR EQUAL.

E4 GROUND BAR DIMENSIONS
NTS

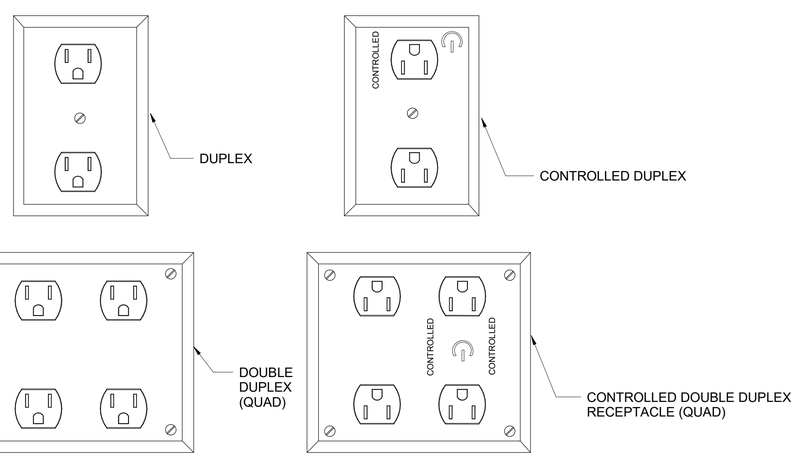

NOTES:
1. PROVIDE SWITCHED AND UNSWITCHED CONDUCTORS TO RECEPTACLE BACK BOX FOR CONNECTION TO THE SWITCHED AND UNSWITCHED RECEPTACLE.

A1 RECEPTACLE DETAIL CONTROLLED BY ROOM CONTROLLER
NOT TO SCALE

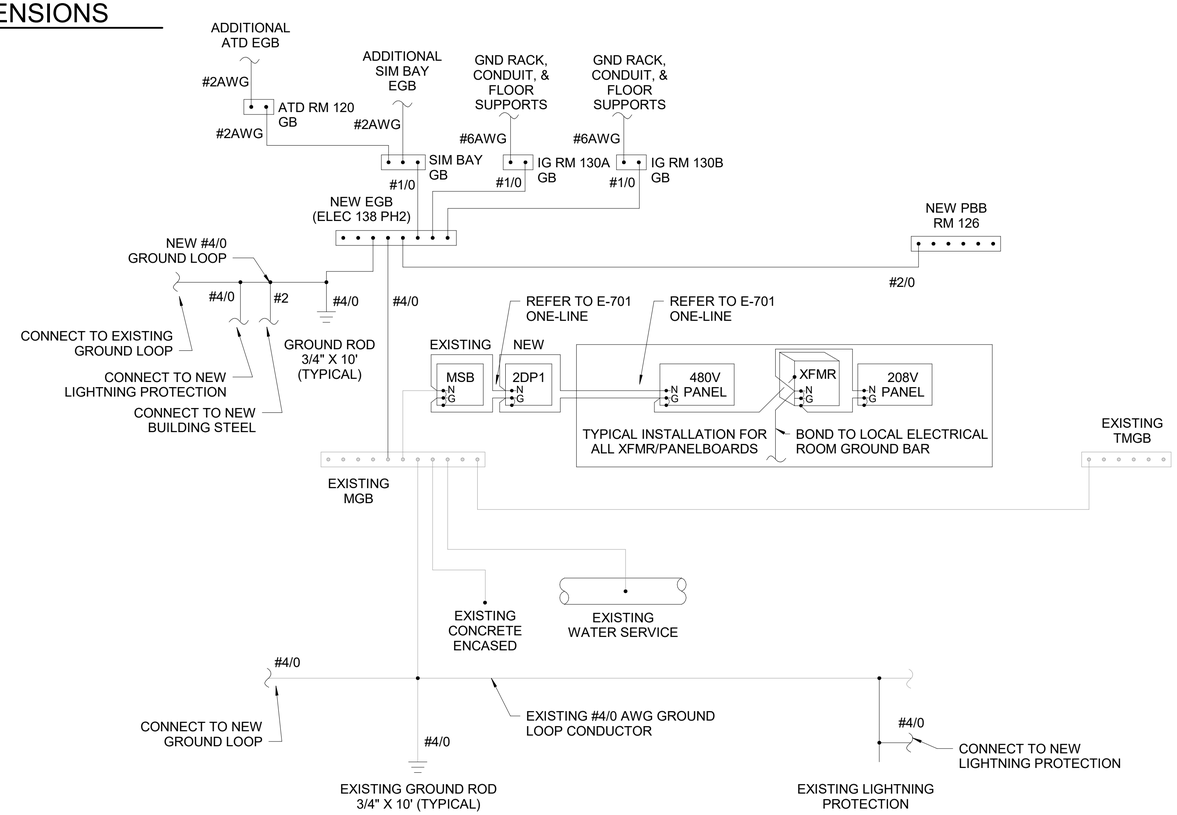

A5 GROUNDING - RISER DIAGRAM
NTS

US Army Corps of Engineers ®

MARK	DESCRIPTION	DATE

DESIGNED BY: A. MCWHORTER
DRAWN BY: S. WALCHER
CHECKED BY: V. MONTELLANO
SUBMITTED BY: E. OLNESS
SIZE: ANSI D
FILENAME: K469-951-E-501
ISSUE DATE: JUNE 2022
CONTRACT NO.: W912PP-22-R-0021

US ARMY CORPS OF ENGINEERS
ALBUQUERQUE
ALBUQUERQUE, NEW MEXICO

JACOBS
JACOBS ENGINEERING GROUP INC.
777 Main Street
Fort Worth, TX 76102

COMBAT RESCUE HELICOPTER SIMULATOR FACILITY
KIRTLAND AIR FORCE BASE (AFB),
BERNALILLO COUNTY, NEW MEXICO

CRH SIMULATOR FACILITY ADAL
DETAILS

SHEET ID
951B
E-501

READY TO ADVERTISE

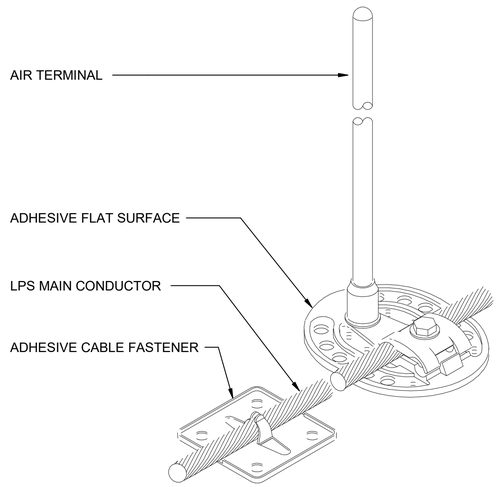

E1 AIR TERMINAL ADHESIVE BASE DETAIL
NTS

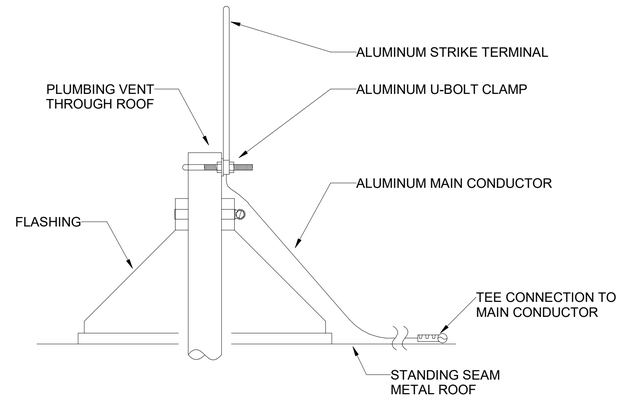

E4 LIGHTNING PROTECTION - ROOF TOP PIPING
NTS

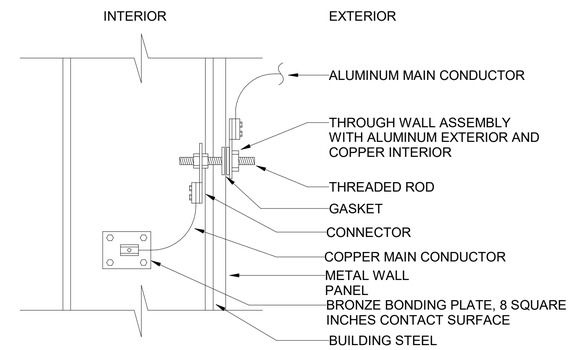

C7 DISSIMILAR METALS BONDING
NTS

NOTE:
THIS INFORMATION MAY NOT CONTAIN ALL DETAILS REQUIRED FOR CONSTRUCTION. APPROPRIATE REVISION MAY BE REQUIRED TO ENSURE SUITABILITY OF THESE DRAWINGS FOR THE SPECIFIC APPLICATION. IT IS THE USER'S RESPONSIBILITY TO ENSURE INSTALLATION OF THE EQUIPMENT/SYSTEM IS IN ACCORDANCE WITH BUILDING/PROJECT SPECIFICATIONS, APPLICABLE CODES AND STANDARDS.

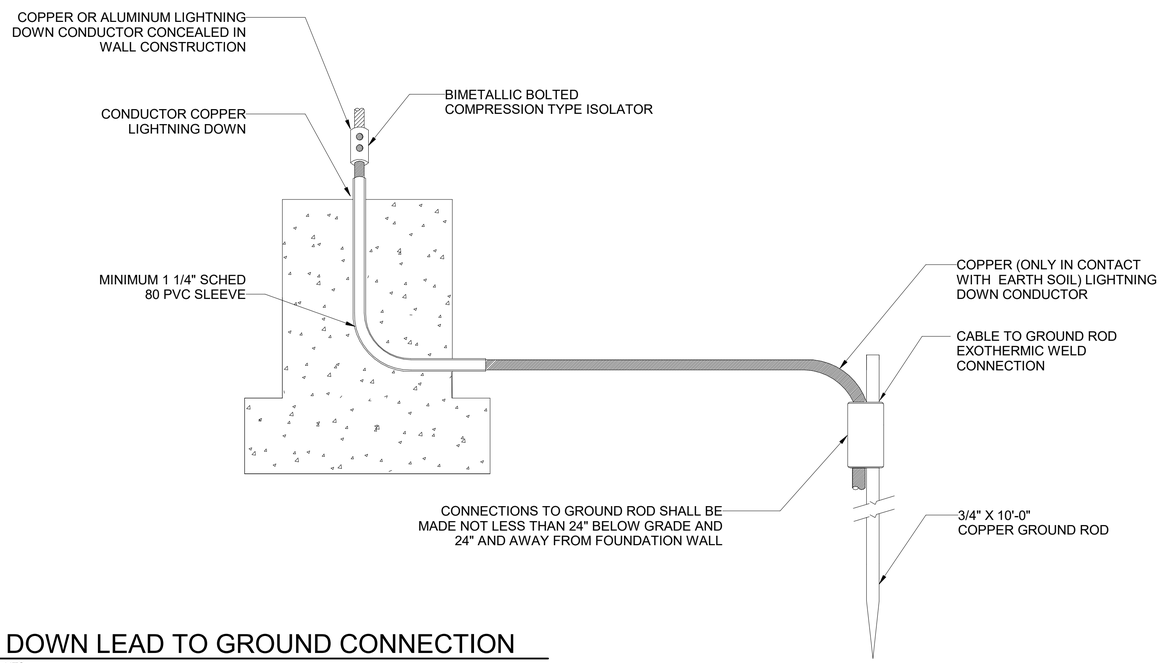

A1 DOWN LEAD TO GROUND CONNECTION
NTS

STATE OF TEXAS
AARON McWHORTER
100310
LICENSED PROFESSIONAL ENGINEER
6.24.2021

US Army Corps of Engineers ®

MARK	DESCRIPTION	DATE

DESIGNED BY: A. MCWHORTER
DRAWN BY: S. WALCHER
CHECKED BY: V. MONTELLANO
SUBMITTED BY: E. OLMESS
SIZE: ANSI D
ISSUE DATE: JUNE 2022
CONTRACT NO.: W912PP-22-R-0021
FILENAME: K486-951-E-504

US ARMY CORPS OF ENGINEERS
ALBUQUERQUE
ALBUQUERQUE, NEW MEXICO

JACOBS
JACOBS ENGINEERING GROUP INC.
777 Main Street
Fort Worth, TX 76102

COMBAT RESCUE HELICOPTER SIMULATOR FACILITY
KIRTLAND AIR FORCE BASE (AFB)
BERNALILLO COUNTY, NEW MEXICO

CRH SIMULATOR FACILITY ADAL
DETAILS

SHEET ID
951B
E-502

READY TO ADVERTISE

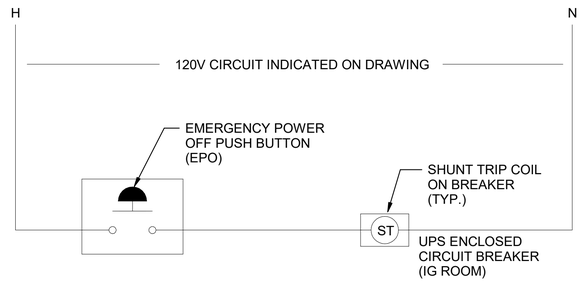

NOTES:

1. TYPICAL FOR IG ROOMS.

F3 EPO PUSH BUTTON IG ROOM DETAIL

NTS

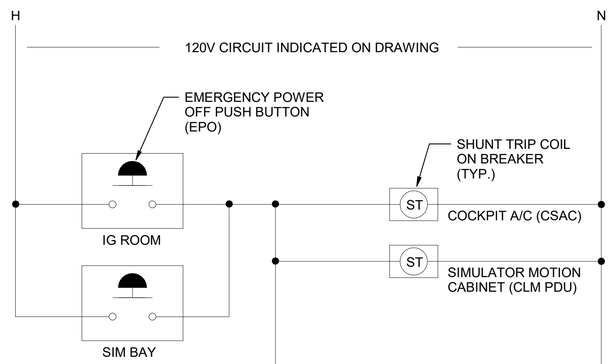

C3 EPO PUSH BUTTON SIM BAY DETAIL

NTS

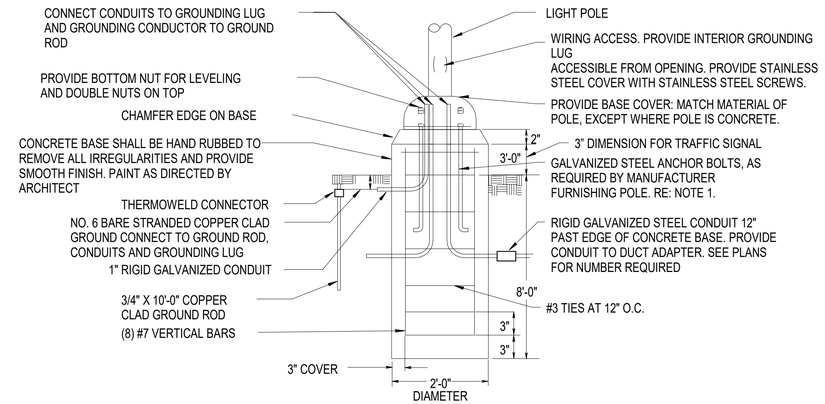

NOTES:
1. VERIFY 2'-0" DIAMETER CONCRETE PIER PROVIDES MINIMUM 3" COVER ON POLE ANCHOR BOLTS. NOTIFY CONTRACTING OFFICER IF A LARGER DIAMETER PIER IS REQUIRED TO MAINTAIN 3" COVER ON POLE ANCHOR BOLTS.

F6 LIGHTING POLE BASE DETAIL

NTS

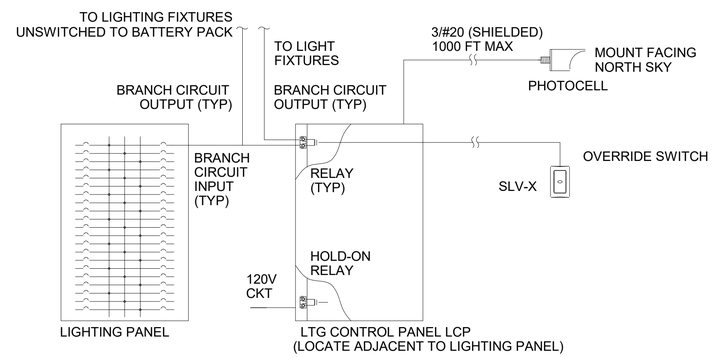

C6 TYP LIGHTING CONTROL SINGLE LINE DIAGRAM

NTS

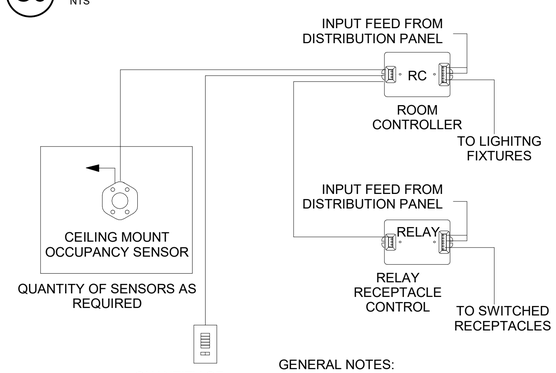

GENERAL NOTES:

1. PROVIDE COMPLETE LIGHTING CONTROL WIRING DIAGRAM, CUTSHEETS, QUANTITY OF DEVICES, DEVICE LOCATIONS, AND SEQUENCE OF OPERATIONS.

A6 ROOM CONTROLLER

NTS

STATE OF TEXAS
AARON McWHORTER
100310
LICENSED
PROFESSIONAL ENGINEER
6.24.2021

US Army Corps of Engineers ®

MARK	DESCRIPTION	DATE

DESIGNED BY: A. MCWHORTER
DRAWN BY: S. WALCHER
CHECKED BY: V. MONTELLANO
SUBMITTED BY: E. OLMESS
SIZE: ANSI D
ISSUE DATE: JUNE 2022
CONTRACT NO.: W912PP-22-R-0021
FILENAME: K486-951-E-503

US ARMY CORPS OF ENGINEERS
ALBUQUERQUE
ALBUQUERQUE, NEW MEXICO

JACOBS
JACOBS ENGINEERING GROUP INC.
777 Main Street
Fort Worth, TX 76102

COMBAT RESCUE HELICOPTER SIMULATOR FACILITY
KIRTLAND AIR FORCE BASE (AFB),
BERNALILLO COUNTY, NEW MEXICO

CRH SIMULATOR FACILITY ADAL
DETAILS

SHEET ID
951B
E-503

READY TO ADVERTISE

LUMINAIRE SCHEDULE

TYPE MARK	DESCRIPTION	VOLTAGE	COLOR TEMPERATURE	CRI	LAMP	LUMINAIRE WATTS	DELIVERED LUMENS	MOUNTING TYPE	REMARKS
A1	2FT X 2FT LED FLAT PANEL LUMINAIRE. DIFFUSE OPTIC DISTRIBUTION. 0-10V DIMMING DRIVER TO 10%.	277V	4000K	85	LED	24	3000	RECESSED GRID	BASIS OF DESIGN: CORELITE-WD-3-L40-UNV-22-STD
A1E	SAME AS TYPE A1 WITH INTEGRAL BATTERY BACKUP	277V	4000K	85	LED	24	3000	RECESSED GRID	SAME AS TYPE A1 WITH BATTERY BACKUP
A2	2FT X 4FT RECESSED LENSED TROFFER SPECIFICATION GRADE, SMOOTH ACRYLIC LENS	277V	4000K	82	LED	38	4900	RECESSED GRID	BASIS OF DESIGN: COOPER-LLT-40-G-FA--SFA-E-U OR APPROVED EQUAL
A2E	SAME AS TYPE A2 WITH INTEGRAL BATTERY BACKUP	277V	4000K	85	LED	38	4900	RECESSED GRID	SAME AS TYPE A2 WITH BATTERY BACKUP
B1	ROUND DOWNLIGHT 4.5IN APERTURE, CLEAR DIFFUSE, 0-10V DIMMING DRIVER TO 10%	277V	4000K	80	LED	19	1000	RECESSED	BASIS OF DESIGN: FOCAL POINT-RO-1000L-277-LD1-T-BH-LC4-RO-40K-FL2-CD-WP OR APPROVED EQUAL
B1E	SAME AS TYPE B1 WITH INTEGRAL BATTERY BACKUP	277V	4000K	80	LED	19	1000	RECESSED	SAME AS TYPE B1 WITH BATTERY BACKUP
C4	16FT RUN SUSPENDED DIRECT / INDIRECT LUMINAIRE ARCHITECTURAL CURVE AND FROSTED ACRYLIC LENS. 0-10V DIMMING DRIVER. WHITE LOW GLOSS FINISH 70 UP/30 DOWN, STRAIGHT ENDCAP, 16FT RUN LENGTH.	277V	4000K	85	LED	35.5/4FT	3700/4FT	SUSPENDED 9'-0"	BASIS OF DESIGN: CORELITE-I2-WS-2-L40-1-D-UNV-AC-18"-T1-16-STD-DM8-W-ES
F	4FT INDUSTRIAL ENCLOSED AND GASKETED WITH POLYCARBONATE HOUSING AND HIGH IMPACT POLYCARBONATE LENS, WET LOCATION LISTED LUMINAIRE FOR ELEVATOR SHAFT	277V	4000K	80	LED	39	4400	SUSPENDED 8'-0"	BASIS OF DESIGN: COOPER METALUX: 4SNLED-LD5-48SL-UNV-L840-CD OR APPROVED EQUAL
FE	SAME AS TYPE F WITH INTEGRAL BATTERY BACKUP	277V	4000K	80	LED	39	4400	SUSPENDED 8'-0"	SAME AS TYPE F WITH BATTERY BACKUP
G1	RED BEACON WARNING STROBE LIGHT (MATCH EXISTING) FEDERAL SIGNAL CORP VITALITE: 121S - TYPE G - 434G	120V	-		KRYPTON	0.36	2100/15000	CEILING MOUNT	MATCH EXISTING
P2	6IN DIAMETER CYLINDER PENDANT LUMINAIRE WITH INTERNAL DRIVER. 41 DEGREE BEAM SPREAD. MATTE WHITE HOUSING. WHITE POWER CORD.	277V	4000K	80	LED	5.6	700	SUSPENDED MULTIPLE HEIGHTS	BASIS OF DESIGN: V2 LIGHTING-C4LP-N-N-D-07-83-40-41-T1-WH-RS (SEE PLANS FOR STEM LENGTH)
R	RECESSED PERIMETER LINEAR, REGRESS LENS 4 INCH WIDTH, 20FT AND 18FT RUN LENGTH. REFER TO ARCHITECTURAL PLANS FOR DIMENSIONS	277V	4000K	80	LED	7 / FT.	375 / FT.	RECESSED	BASIS OF DESIGN: FOCAL POINT-SEEM4-FSM4L-FL2-375LF-40K -XF-WH (SEE PLANS FOR RUN LENGTH)
S1	ARCHITECTURAL AREA LIGHT BASE STANDARD TYPE 5 DISTRIBUTION SITE LIGHT. FULL CUTOFF. 0-10V STANDARD DIMMING DRIVER. DARK BRONZE FINISH. FIXTURE MOUNTED PHOTOCELL.	MATCH EXISTING	4000K	80	LED	68	7757	POLE	BASIS OF DESIGN: KIM LIGHTING-WP9S-5-E35-60L-4K MOUNT ON 25FT ROUND, TAPERED ALUMINUM POLE.
W1E	ARCHITECTURAL WALL PACK, DIE-CAST ALUMINUM HOUSING INTEGRAL HEAT SINK. TYPE 3 DISTRIBUTION. DARK BRONZE FINISH, INTEGRAL BATTERY BACKUP. MATCH EXISTING	277V	4000K	70	LED	23	3000	WALL MOUNT ABOVE DOOR	BASIS OF DESIGN: LITHONIA-DSXW1- LED-20C-350-T3M-277-ELCW-DDBXD (MATCH EXISTING ADJOINING BLDG)
W1	ARCHITECTURAL WALL PACK, DIE-CAST ALUMINUM HOUSING INTEGRAL HEAT SINK. TYPE 3 DISTRIBUTION. DARK BRONZE FINISH. MATCH EXISTING	277V	4000K	70	LED	35	4000	WALL MOUNT ABOVE ROLLUP DOOR	BASIS OF DESIGN: LITHONIA-DSXW1- LED-20C-530-T3M-277-DDBXD (MATCH EXISTING ADJOINING BLDG)
W3	LARGE FLOOD LIGHT, MEDIUM DISTRIBUTION, WHITE FINISH. PROVIDE LOUVER OPTION FOR GLARE CONTROL.	277V	4000K	80	LED	265	28000	WALL 25FT	BASIS OF DESIGN: HUBBELL-RFL5-360L-265-4K7-M-277-K-WH-CD, (RFL5-FL-WH)
W4	LINEAR WALL MOUNTED DIRECT/INDIRECT, ACRYLIC LENS, 4FT LENGTH, WHITE FINISH	277V	4000K	80	LED	63	7500	WALL MOUNT 20FT	BASIS OF DESIGN: ALERA-LP7-OA-4-40-VL-80-WM-ED-U-MW-DC
W5E	SAME AS TYPE W4 WITH INTEGRAL BATTERY BACKUP AND VERY LOW WATT LUMEN PACKAGE	277V	4000K	80	LED	30	3200	WALL MOUNT 7FT	BASIS OF DESIGN: ALERA-LP7-OA-4-40-VW-80-WM-ED-U-MW-ELL10
X1	BRUSHED ALUMINUM EXIT SIGN, GREEN LED, SINGLE FACE, UNIVERSAL MOUNT, INTEGRAL BATTERY BACKUP, SELF DIAGNOSTIC	120/277V	-		LED	7		UNIVERSAL	CEILING, WALL, OR END MOUNT. REFER TO PLANS FOR MOUNTING TYPE.
X2	COMBO WHITE EXIT SIGN, GREEN LED, SINGLE FACE, DUAL HEAD LED EMERGENCY LIGHT UNIVERSAL MOUNT, INTEGRAL BATTERY BACKUP, SELF DIAGNOSTIC	120/277V	-		LED	7		UNIVERSAL	CEILING, WALL, OR END MOUNT. REFER TO PLANS FOR MOUNTING TYPE.

NOTES: 1. SELECT PRODUCTS THAT MEET ALL LUMINAIRE PERFORMANCE CRITERIA AND, AT A MINIMUM, HAVE AN EFFICACY (LUMENS PER WATT) NO LESS THAN THE BASIS OF DESIGN.

2. PROVIDE 10-YEAR FULL WARRANTY ON LUMINAIRES INCLUDING BALLAST AND LED'S.

STATE OF TEXAS
AARON McWHORTER
100310
LICENSED PROFESSIONAL ENGINEER
6.24.2021

US Army Corps of Engineers ®

MARK	DESCRIPTION	DATE

DESIGNED BY: A. MCWHORTER
DRAWN BY: S. WALCHER
CHECKED BY: V. MONTELLANO
SUBMITTED BY: E. OLMESS
SIZE: ANSI D
FILENAME: K486951-E-601
ISSUE DATE: JUNE 2022
CONTRACT NO.: W912PP-22-R-0021

US ARMY CORPS OF ENGINEERS
ALBUQUERQUE
ALBUQUERQUE, NEW MEXICO

JACOBS
JACOBS ENGINEERING GROUP INC.
777 Main Street
Fort Worth, Texas 76102

COMBAT RESCUE HELICOPTER SIMULATOR FACILITY
KIRTLAND AIR FORCE BASE (AFB)
BERNALILLO COUNTY, NEW MEXICO

CRH SIMULATOR FACILITY ADAL
SCHEDULES

SHEET ID
951B
E-601

READY TO ADVERTISE

WIRE AND CONDUIT SCHEDULE - COPPER			
(3) WIRE		(4) WIRE	
SYMBOL	(3) WIRE & GROUND, CONDUIT	SYMBOL	(4) WIRE & GROUND, CONDUIT
3W20	3 #12 & 1 #12G, 3/4"C.	4W20	4 #12 & 1 #12G, 3/4"C.
3W25	3 #10 & 1 #10G, 3/4"C.	4W30	4 #10 & 1 #10G, 3/4"C.
3W30	3 #10 & 1 #10G, 3/4"C.	4W35	4 #8 & 1 #10G, 3/4"C.
3W35	3 #8 & 1 #10G, 3/4"C.	4W40	4 #8 & 1 #10G, 3/4"C.
3W40	3 #8 & 1 #10G, 3/4"C.	4W45	4 #6 & 1 #10G, 1"C.
3W45	3 #6 & 1 #10G, 3/4"C.	4W50	4 #6 & 1 #10G, 1"C.
3W50	3 #6 & 1 #10G, 3/4"C.	4W60	4 #4 & 1 #10G, 1-1/4"C.
3W60	3 #4 & 1 #10G, 1"C.	4W70	4 #4 & 1 #8G, 1-1/4"C.
3W70	3 #4 & 1 #8G, 1"C.	4W80	4 #3 & 1 #8G, 1-1/4"C.
3W80	3 #3 & 1 #8G, 1-1/4"C.	4W90	4 #2 & 1 #8G, 2"C.
3W90	3 #2 & 1 #8G, 1-1/4"C.	4W100	4 #1 & 1 #8G, 2"C
3W100	3 #1 & 1 #8G, 1-1/4"C	4W110	4 #1/0 & 1 #6G, 2"C.
3W110	3 #1/0 & 1 #6G, 1-1/2"C.	4W125	4 #1/0 & 1 #6G, 2"C.
3W125	3 #1/0 & 1 #6G, 1-1/2"C.	4W150	4 #1/0 & 1 #6G, 2-1/2"C.
3W150	3 #1/0 & 1 #6G, 1-1/2"C.	4W175	4 #2/0 & 1 #6G, 2-1/2"C.
3W175	3 #2/0 & 1 #6G, 1-1/2"C.	4W200	4 #3/0 & 1 #6G, 2-1/2"C.
3W200	3 #3/0 & 1 #6G, 2"C.	4W225	4 #4/0KCMIL & 1 #4G, 3"C.
3W225	3 #4/0 & 1 #4G, 2"C.	4W250	4 #250 & 1 #3G, 3"C.
3W250	3 #250 & 1 #4G, 2"C.	4W300	4 #500 & 1 #3G, 3-1/2"C.
3W300	3 #300 & 1 #4G, 2 1/2"C.	4W350	(2) 4 #4/0 & 1 #1G, 2-1/2"C.
3W350	3 #400 & 1 #3G, 2-1/2"C.	4W400	(2) 4 #3/0 & 1 #3G, 3"C.
3W400	(2) 3#3/0 & #3 G, 3"C.	4W600	(2) 4 #350 & 1 #1G, 3"C.
3W600	(2) 3#350 & 1#1 G, 2-1/2"C.	4W700	(3) 4 #300 & 1 #1/0G, 3-1/2"C.
3W800	(3) 3#300 & 1#1/0 G, 3"C.	4W800	(3) 4 #300 & 1 #1/0G, 3-1/2"C.
XFMR kVA	PRIMARY	XFMR kVA	SECONDARY
45	3 #1 & 1 #6 G, 1-1/4"C.	45	4 #1/0 & 1 #6 G, 2"C.
75	3 #1/0 & 1 #6 G, 1-1/2"C.	75	4 #250KCMIL & 1 #2 G, 3"C.

EQUIPMENT CONNECTION SCHEDULE								
MARK	FED FROM	CIRCUIT	FEEDER	VOLTAGE	CONNECTION	AMPS	DISCONNECT RATING	ENCLOSURE
AHU-1 RETURN	2BH1	7,9,11	3W20	480 V	VFD	8 A	30 A	
AHU-1 SUPPLY	2BH1	1,3,5	3W25	480 V	VFD	17 A	30 A	
AHU-2 RETURN	2BH1	19,21,23	3W20	480 V	VFD	6 A	30 A	
AHU-2 SUPPLY	2BH1	13,15,17	3W40	480 V	VFD	34 A	60 A	
B-1 & B-2	2BL1	17	2W20	120 V		12 A	0 A	
CH-1	2DP1	25,27,29	3W100	480 V	NF	154 A	200 A	NEMA 3R
CH-2	2DP1	31,33,35	3W100	480 V	NF	154 A	200 A	NEMA 3R
CRAC-1	2BH1	32,34,36	3W20	480 V	NF	11 A	30 A	
CRAC-2	2BH1	26,28,30	3W20	480 V	NF	11 A	30 A	
CRAC-3	2BH1	20,22,24	3W20	480 V	NF	11 A	30 A	
CRAC-4	2BH1	14,16,18	3W20	480 V	NF	11 A	30 A	
CRAC-5								
CSAC-1	2BL2	8,10,12	3W40	208 V	NF	30 A	60 A	
CSAC-2	2BL2	14,16,18	3W40	208 V	NF	30 A	60 A	
CU-1	2BL2	1,3	2W20	208 V	NF	13 A	30 A	NEMA 3R
DX-PUMP	2BL2	2,4	2W20	208 V	NF	1 A	30 A	
EF-1	2BL2	28	2W20	120 V		6 A	0 A	
EF-2	2BL2	26	2W20	120 V		6 A	0 A	
EF-3	2BL2	24	2W20	120 V		6 A	0 A	
EF-4	2BL2	32	2W20	120 V		4 A	0 A	
EF-5	2BL2	30	2W20	120 V		4 A	0 A	
H-1	2BH1	38,40,42	3W20	480 V	VFD	6 A	30 A	
P-1	2BH1	25,27,29	3W20	480 V	VFD	14 A	30 A	
P-2	2BH1	31,33,35	3W20	480 V	VFD	14 A	30 A	
P-3	2BH1	2,4,6	3W20	480 V	VFD	5 A	30 A	
P-4	2BH1	37,39,41	3W20	480 V	VFD	5 A	30 A	
SF-1	2BL2	13	2W20	120 V		4 A	0 A	
UH-1	2BL2	15	2W20	120 V		1 A	0 A	

LIGHTING CONTROL MATRIX

ROOM / AREA CONTROLLED	WALLSTATION/ SWITCH	DIMMING	PHOTOCELL **	OCCUPANCY OR VACANCY SENSOR	TIME-CLOCK	LIGHTING CONTROL SYSTEM	CONTROLLED RECEPTACLES	CONTROL SEQUENCE
ADMINSTRATION	X	X		X			X	OCCUPANCY SENSOR AUTO LIGHTS "ON" VIA OCC SENSOR TO 50% AND MANUAL "ON" TO 100%. RAISE/LOWER ZONED DIMMING. RECEPTACLES CONTROLLED THROUGH OCCUPANCY SENSOR AUTO "ON".
CORRIDORS	X			X				OCCUPANCY SENSOR AUTO LIGHTS "ON" WITH MANUAL OVERRIDE SWITCH "ON" WALL STATION. (CORRIDOR LIGHTS TO TURN "ON" TOGETHER WITH A SINGLE ZONE)
MISSION PLANNING, MULTI-PURPOSE	X						X	OCCUANCY SENSOR AUTO LIGHTS "ON" VIA OCC SENSOR TO 50% AND MANUAL "ON" TO 100%. RAISE/LOWER ZONED DIMMING. RECEPTACLES CONTROLLED THROUGH OCCUPANCY SENSOR AUTO "ON".
SIMULATOR BAY, ATD TRAINING	X	X						ZONED DIMMING (PROVIDE SLIDE DIMMERS FOR SMOOTH CONTROL AND FIXTURE DIMMER COMPATABILITY)
IMAGE GENERATOR ROOM	X							MANUAL "ON/OFF" AT SWITCH.
CONFERENCE & MEETING ROOMS, BREAKROOM	X			X			X	OCCUPANCY SENSOR TURNS LIGHTS "ON" TO 50%. MANUAL "ON" TO 100% AT WALLSTATION WITH RAISE/LOWER DIMMING.
ELECTRICAL, MECHANICAL, TELEPHONE, MEZZANINE	X							MANUAL "ON/OFF" AT SWITCH.
STORAGE, JANITOR ROOMS	X			X				OCCUPANCY SENSOR TURNS LIGHTS "ON" TO 50%. MANUAL "ON" TO 100% AT WALLSTATION.
RESTROOMS	X			X				LIGHTS "ON/OFF" VIA OCCUPANCY SENSOR WITH MANUAL OVERRIDE.
BUILDING MOUNTED EXTERIOR LIGHTS	X		X		X			LIGHTS "ON" VIA PHOTOCELL / "OFF" VIA PHOTOCELL AND MANUAL OVERRIDE SWITCH "OFF"
PARKING LOT LIGHTS			X					LIGHTS "ON" VIA PHOTOCELL / "OFF" VIA PHOTOCELL MOUNTED ON FIXTURES
MECHANICAL YARD LIGHTS	X		X		X			LIGHTS "ON" VIA PHOTOCELL ON PLUS MANUAL SWITCH "ON", AND LIGHT "OFF" VIA TIMECLOCK OFF.

* VERIFY TIMES WITH CONTRACTING OFFICER. ** PROVIDE PHOTOCELL ON ROOF, FACING NORTH.

STATE OF NEW MEXICO
AARON McWHORTER
100310
LICENSED PROFESSIONAL ENGINEER
6-24-2021

READY TO ADVERTISE

US Army Corps of Engineers ®

MARK	DESCRIPTION	DATE

DESIGNED BY: A. MCWHORTER
DRAWN BY: S. WALCHER
CHECKED BY: V. MONTELLANO
SUBMITTED BY: E. OLMESS
SIZE: ANSI D
FILENAME: K486-951-E-602
ISSUE DATE: JUNE 2022
CONTRACT NO. : W912PP-22-R-0021

US ARMY CORPS OF ENGINEERS
ALBUQUERQUE
ALBUQUERQUE, NEW MEXICO

JACOBS
JACOBS ENGINEERING GROUP INC.
777 Main Street
FORT WORTH, TX 76102

COMBAT RESCUE HELICOPTER SIMULATOR FACILITY
KIRTLAND AIR FORCE BASE (AFB),
BERNALILLO COUNTY, NEW MEXICO

CRH SIMULATOR FACILITY ADAL
SCHEDULES

SHEET ID
951B
E-602

2DP2

Location: ELEC 138
Supply From: MSB
Mounting: Surface
Accessories:

Volts: 480/277 Wye
Phases: 3
Wires: 4

Mains Type: MCB
Bus Rating: 800 A

A.I.C. Rating: 35k
Available Fault Current: 23k

CKT	Circuit Description	Trip	Poles	A		B		C		Poles	Trip	Circuit Description	CKT
1				62352 VA	0 VA								2
3	UPS & BATTERY IG RM 130B	300 A	3			62352 VA	0 VA			3	60 A	SPD	4
5								62352 VA	0 VA				6
7				44339 VA	0 VA					--	--	Space	8
9	CLM PDU SIM BAY 3 130	200 A	3			44339 VA	0 VA			--	--	Space	10
11								44339 VA	0 VA	--	--	Space	12
13				44339 VA	0 VA					--	--	Space	14
15	CLM PDU SIM BAY 2 130	200 A	3			44339 VA	0 VA			--	--	Space	16
17								44339 VA	0 VA	--	--	Space	18
19				60966 VA	0 VA					--	--	Space	20
21	UPS & BATTERY IG RM 130A	300 A	3			60966 VA	0 VA			--	--	Space	22
23								60966 VA	0 VA	--	--	Space	24
25	Space	--	--	0 VA	0 VA					--	--	Space	26
27	Space	--	--			0 VA	0 VA			--	--	Space	28
29	Space	--	--					0 VA	0 VA	--	--	Space	30
			Total Load:	211997 VA		211997 VA		211997 VA					

Load Classification	Connected Load	Design Factor	Estimated Demand	Panel Totals	
UPS/PDU	635991 VA	80.00%	508793 VA		
				Total Conn. Load:	635991 VA
				Total Est. Demand:	508793 VA
				Total Conn. Current:	765 A
				Total Est. Demand Current:	612 A
				Non-Coincident...	0 A
				Total Demand Current:	612 A

Notes:
1. TOTAL DEMAND CURRENT INCORPORATES ONLY THE NON-COINCIDENT PEAK LOAD BETWEEN HEATING AND COOLING.

2DP1

Location: ELEC 138
Supply From: MSB
Mounting: Surface
Accessories:

Volts: 480/277 Wye
Phases: 3
Wires: 4

Mains Type: MCB
Bus Rating: 800 A

A.I.C. Rating: 35k
Available Fault Current: 23k

CKT	Circuit Description	Trip	Poles	A		B		C		Poles	Trip	Circuit Description	CKT
1				49943 VA	50333 VA								2
3	2BH1	225 A	3			49943 VA	50333 VA			3	200 A	AST PDU ATD (AIRCREW TRAINING DEVICE) 120	4
5								49943 VA	50333 VA				6
7				15960 VA	0 VA								8
9	T2RL1	125 A	3			11950 VA	0 VA			3	60 A	SPD	10
11								12250 VA	0 VA				12
13				11580 VA	0 VA					--	--	Space	14
15	T2BL2	70 A	3			11220 VA	0 VA			--	--	Space	16
17								9819 VA	0 VA	--	--	Space	18
19				13816 VA	0 VA					--	--	Space	20
21	T2BL1	125 A	3			10860 VA	0 VA			--	--	Space	22
23								8775 VA	0 VA	--	--	Space	24
25				42183 VA	0 VA					--	--	Space	26
27	CH-1 CHILLER	175 A	3			42183 VA	0 VA			--	--	Space	28
29								42183 VA	0 VA	--	--	Space	30
31				42183 VA	0 VA					--	--	Space	32
33	CH-2 CHILLER	175 A	3			42183 VA	0 VA			--	--	Space	34
35								42183 VA	0 VA	--	--	Space	36
37				2991 VA	0 VA					--	--	Space	38
39	2BH2	60 A	3			5006 VA	0 VA			--	--	Space	40
41								6411 VA	0 VA	--	--	Space	42
			Total Load:	228982 VA		223679 VA		221898 VA					

Load Classification	Connected Load	Design Factor	Estimated Demand	Panel Totals	
UPS/PDU	151000 VA	80.00%	120800 VA		
HVAC	285565 VA	100.00%	285565 VA	**Total Conn. Load:**	674560 VA
LTG	349 VA	100.00%	349 VA	**Total Est. Demand:**	494629 VA
Lighting	9036 VA	100.00%	9036 VA	**Total Conn. Current:**	811 A
Misc. Non-Continuous	20227 VA	100.00%	20227 VA	**Total Est. Demand Current:**	595 A
Motor	4468 VA	103.89%	4642 VA	**Non-Coincident...**	0 A
Other	12964 VA	100.00%	12964 VA	**Total Demand Current:**	595 A
RECEPTACLES	59240 VA	58.44%	34620 VA		
REDUNDANT	126550 VA	1.00%	1266 VA		
Receptacle	5180 VA	100.00%	5180 VA		

Notes:
1. TOTAL DEMAND CURRENT INCORPORATES ONLY THE NON-COINCIDENT PEAK LOAD BETWEEN HEATING AND COOLING.

2BH1

Location: ELEC 138
Supply From: 2DP1
Mounting: Surface
Accessories:

Volts: 480/277 Wye
Phases: 3
Wires: 4

Mains Type: MLO
Bus Rating: 225 A

A.I.C. Rating: 35k
Available Fault Current: 23k

CKT	Circuit Description	Trip	Poles	A		B		C		Poles	Trip	Circuit Description	CKT
1				4568 VA	1330 VA								2
3	AHU-1 SUPPLY MECH 139	20 A	3			4568 VA	1330 VA			3	15 A	P-3 MECHANICAL 139	4
5								4568 VA	1330 VA				6
7				2217 VA	5542 VA								8
9	AHU-1 RETURN MECH 139	15 A	3			2217 VA	5542 VA			3	20 A	OVERHEAD CRANE SIMULATOR 2 130	10
11								2217 VA	5542 VA				12
13				9433 VA	4167 VA								14
15	AHU-2 SUPPLY MEZZ	40 A	3			9433 VA	4167 VA			3	20 A	CRAC-4 IMAGE GENERATOR 3 130B	16
17								9433 VA	4167 VA				18
19				767 VA	4167 VA								20
21	AHU-2 RETURN MEZZ	15 A	3			767 VA	4167 VA			3	20 A	CRAC-3 IMAGE GENERATOR 3 130B	22
23								767 VA	4167 VA				24
25				3045 VA	4167 VA								26
27	P-1 MECHANICAL 139	15 A	3			3045 VA	4167 VA			3	20 A	CRAC-2 IMAGE GENERATOR 2 130A	28
29								3045 VA	4167 VA				30
31				3045 VA	4167 VA								32
33	P-2 MECHANICAL 139	15 A	3			3045 VA	4167 VA			3	20 A	CRAC-1 IMAGE GENERATOR 2 130A	34
35								3045 VA	4167 VA				36
37				1330 VA	2000 VA								38
39	P-4 MECHANICAL 139	15 A	3			1330 VA	2000 VA			3	20 A	H-1 HUMIDIFIER	40
41								1330 VA	2000 VA				42
			Total Load:	49943 VA		49943 VA		49943 VA					

Load Classification	Connected Load	Design Factor	Estimated Demand	Panel Totals	
HVAC	133203 VA	100.00%	133203 VA		
Misc. Non-Continuous	16627 VA	100.00%	16627 VA	**Total Conn. Load:**	149830 VA
				Total Est. Demand:	149830 VA
				Total Conn. Current:	180 A
				Total Est. Demand Current:	180 A
				Non-Coincident...	0 A
				Total Demand Current:	180 A

Notes:
1. TOTAL DEMAND CURRENT INCORPORATES ONLY THE NON-COINCIDENT PEAK LOAD BETWEEN HEATING AND COOLING.

2BL2

Location: ELEC 138
Supply From: T2BL2
Mounting: Surface
Accessories:

Volts: 120/208 Wye
Phases: 3
Wires: 4

Mains Type: MCB
Bus Rating: 225 A
MCB Rating 150 A

A.I.C. Rating: 10k
Available Fault Current: 6k

CKT	Circuit Description	Trip	Poles	A		B		C		Poles	Trip	Circuit Description	CKT
1	CU-1 MECHANICAL YARD 000	20 A	2	1373 VA	50 VA					2	20 A	DXFCU-1 TR 126	2
3						1373 VA	50 VA						4
5	OVHD DOOR SIMULATOR 3 130	20 A	2					600 VA	10 VA	1	20 A	TU VAV MECH CONTROLLER	6
7				600 VA	3603 VA								8
9	OVHD DOOR SIMULATOR 2 130	20 A	2			600 VA	3603 VA			3	40 A	CSAC-1 SIMULATOR 2 130	10
11								600 VA	3603 VA				12
13	HVAC SF-1	20 A	1	528 VA	3603 VA								14
15	UH-1 MECH 139	20 A	1			696 VA	3603 VA			3	40 A	CSAC-2 SIMULATOR 3 130	16
17	GF-1 RECEPT MECH 139	20 A	1					180 VA	3603 VA				18
19	Spare	20 A	1	0 VA	600 VA					2	20 A	OVH DOOR ATD (AIRCREW TRAINING DEVICE) 120	20
21	Spare	20 A	1			0 VA	600 VA						22
23	Spare	20 A	1					0 VA	696 VA	1	20 A	EF-3 MECHANICAL 139	24
25	Spare	20 A	1	0 VA	696 VA					1	20 A	EF-2 MECHANICAL 139	26
27	Spare	20 A	1			0 VA	696 VA			1	20 A	EF-1 MECHANICAL 139	28
29	Spare	20 A	1					0 VA	528 VA	1	20 A	EF-5	30
31	Spare	20 A	1	0 VA	528 VA					1	20 A	EF-4	32
33	Spare	20 A	1			0 VA	0 VA			1	20 A	Spare	34
35	Spare	20 A	1					0 VA	0 VA	1	20 A	Spare	36
37	Spare	20 A	1	0 VA	0 VA					1	20 A	Spare	38
39	Spare	20 A	1			0 VA	0 VA			1	20 A	Spare	40
41	Spare	20 A	1					0 VA	0 VA	1	20 A	Spare	42
			Total Load:	11580 VA		11220 VA		9819 VA					

Load Classification	Connected Load	Design Factor	Estimated Demand	Panel Totals	
HVAC	24372 VA	100.00%	24372 VA		
Misc. Non-Continuous	3600 VA	100.00%	3600 VA	**Total Conn. Load:**	32620 VA
Motor	4468 VA	103.89%	4642 VA	**Total Est. Demand:**	32794 VA
RECEPTACLES	180 VA	100.00%	180 VA	**Total Conn. Current:**	91 A
				Total Est. Demand Current:	91 A
				Non-Coincident...	0 A
				Total Demand Current:	91 A

Notes:
1. TOTAL DEMAND CURRENT INCORPORATES ONLY THE NON-COINCIDENT PEAK LOAD BETWEEN HEATING AND COOLING.

STATE OF TEXAS
AARON McWHORTER
100310
LICENSED
PROFESSIONAL ENGINEER
6.24.2021

READY TO ADVERTISE

US Army Corps of Engineers ®

MARK	DESCRIPTION	DATE

DESIGNED BY: A. MCWHORTER
DRAWN BY: S. WALCHER
CHECKED BY: V. MONTELLANO
SUBMITTED BY: E. OLMESS
SIZE: ANSI D
FILENAME: K408-951-E-603
ISSUE DATE: JUNE 2022
CONTRACT NO.: W912PP-22-R-0021

US ARMY CORPS OF ENGINEERS
ALBUQUERQUE
ALBUQUERQUE, NEW MEXICO

JACOBS®
JACOBS ENGINEERING GROUP INC.
777 Main Street
Fort Worth, Texas 76102

COMBAT RESCUE HELICOPTER SIMULATOR FACILITY
KIRTLAND AIR FORCE BASE (AFB),
BERNALILLO COUNTY, NEW MEXICO

CRH SIMULATOR FACILITY ADAL
SCHEDULES

SHEET ID
951B
E-603

2RL1A

Location: ELEC 138
Supply From: 2RL1
Mounting: Surface
Accessories:

Volts: 120/208 Wye
Phases: 3
Wires: 4

Mains Type: MLO
Bus Rating: 100 A

A.I.C. Rating: 10k
Available Fault Current: 5k

CKT	Circuit Description	Trip	Poles	A		B		C		Poles	Trip	Circuit Description	CKT
1	RECEPTACLES - 137 SMALL COPIERS	20 A	1	600 VA	600 VA					1	20 A	RECEPTACLES - 122 SMALL COPIERS	2
3	RECEPTACLE - 137 COPIER	20 A	1			500 VA	500 VA			1	20 A	RECEPTACLE - 122 COPIER	4
5	RECEPTACLE - 137 COPIER	20 A	1					500 VA	500 VA	1	20 A	RECEPTACLE - 122 COPIER	6
7	RECEPTACLE - 137 COPIER	20 A	1	500 VA	500 VA					1	20 A	RECEPTACLE - 122 COPIER	8
9	RECEPTACLE - 137 SHREDDER	20 A	1			500 VA	500 VA			1	20 A	RECEPTACLE - 122 SHREDDER	10
11	RECEPTACLES - 137 DESKS	20 A	1					720 VA	900 VA	1	20 A	RECEPTACLES - 122	12
13	RECEPTACLES - 137 DESKS	20 A	1	720 VA	360 VA					1	20 A	FLOOR BOX - 122 CONF TABLE	14
15	RECEPTACLES - 137 DESKS	20 A	1			720 VA	1440 VA			1	20 A	RECEPTACLES - 122 DESKS	16
17	RECEPTACLES - 137 DESKS	20 A	1					720 VA	0 VA	1	20 A	SPARE	18
19	RECEPTACLES - 137	20 A	1	1080 VA	1620 VA					1	20 A	RECEPTACLES - 122 DESKS	20
21	FLOOR BOX - 137 CONF TABLE	20 A	1			360 VA	0 VA			1	20 A	SPARE	22
23	RECEPTACLES - 135	20 A	1					1260 VA	1260 VA	1	20 A	RECEPTACLES - 136	24
25	SPARE	20 A	1	0 VA	0 VA					1	20 A	SPARE	26
27	FLOOR BOX - 135 CONF TABLE	20 A	1			360 VA	360 VA			1	20 A	FLOOR BOX - 136 CONF TABLE	28
29	RECEPTACLES - 134	20 A	1					900 VA	0 VA	1	20 A	SPARE	30
31	RECEPTACLES - 134	20 A	1	1080 VA	0 VA					1	20 A	SPARE	32
33	FLOOR BOX - 134 CONF TABLE	20 A	1			360 VA	0 VA			1	20 A	SPARE	34
35	SPARE	20 A	1					0 VA	0 VA	1	20 A	SPARE	36
37	SPARE	20 A	1	0 VA	0 VA					1	20 A	SPARE	38
39	SPARE	20 A	1			0 VA	0 VA			1	20 A	SPARE	40
41	SPARE	20 A	1					0 VA	0 VA	1	20 A	SPARE	42
			Total Load:	7060 VA		5600 VA		6760 VA					

Load Classification	Connected Load	Design Factor	Estimated Demand	Panel Totals	
RECEPTACLES	17620 VA	78.38%	13810 VA		
Receptacle	1800 VA	100.00%	1800 VA	**Total Conn. Load:**	19420 VA
				Total Est. Demand:	15610 VA
				Total Conn. Current:	54 A
				Total Est. Demand Current:	43 A
				Non-Coincident...	0 A
				Total Demand Current:	43 A

Notes:
1. TOTAL DEMAND CURRENT INCORPORATES ONLY THE NON-COINCIDENT PEAK LOAD BETWEEN HEATING AND COOLING.

2RL1

Location: ELEC 138
Supply From: T2RL1
Mounting: Surface
Accessories:

Volts: 120/208 Wye
Phases: 3
Wires: 4

Mains Type: MCB
Bus Rating: 225 A
MCB Rating 225 A

A.I.C. Rating: 10k
Available Fault Current: 6k

CKT	Circuit Description	Trip	Poles	A		B		C		Poles	Trip	Circuit Description	CKT
1	2RL1A	100 A	3	7060 VA	0 VA					3	60 A	SPD	2
3						5600 VA	0 VA						4
5								6760 VA	0 VA				6
7	2RL1B	100 A	3	7040 VA	0 VA					--	--	Space	8
9						4420 VA	0 VA			--	--	Space	10
11								3560 VA	0 VA	--	--	Space	12
13	2RL1C	100 A	3	1500 VA	0 VA					--	--	Space	14
15						1500 VA	0 VA			--	--	Space	16
17								1500 VA	0 VA	--	--	Space	18
19	DMON RECEPT IG 3 130B	20 A	1	180 VA	0 VA					--	--	Space	20
21	EDS RECEPT IG 3 130B	20 A	1			180 VA	0 VA			--	--	Space	22
23	DMON RECEPT IG 2 130A	20 A	1					180 VA	0 VA	--	--	Space	24
25	EDS RECEPT IG 2 130A	20 A	1	180 VA	0 VA					--	--	Space	26
27	DESTORYER RECEPT 137	20 A	2			250 VA	0 VA			--	--	Space	28
29								250 VA	0 VA	--	--	Space	30
31	Space	--	--	0 VA	0 VA					--	--	Space	32
33	Space	--	--			0 VA	0 VA			--	--	Space	34
35	Space	--	--					0 VA	0 VA	--	--	Space	36
37	Space	--	--	0 VA	0 VA					--	--	Space	38
39	Space	--	--			0 VA	0 VA			--	--	Space	40
41	Space	--	--					0 VA	0 VA	--	--	Space	42
			Total Load:	15960 VA		11950 VA		12250 VA					

Load Classification	Connected Load	Design Factor	Estimated Demand	Panel Totals	
Other	0 VA	0.00%	0 VA		
RECEPTACLES	35700 VA	64.01%	22850 VA	**Total Conn. Load:**	40160 VA
Receptacle	4460 VA	100.00%	4460 VA	**Total Est. Demand:**	27310 VA
				Total Conn. Current:	111 A
				Total Est. Demand Current:	76 A
				Non-Coincident...	0 A
				Total Demand Current:	76 A

Notes:
1. TOTAL DEMAND CURRENT INCORPORATES ONLY THE NON-COINCIDENT PEAK LOAD BETWEEN HEATING AND COOLING.

2RL1B

Location: ELEC 138
Supply From: 2RL1
Mounting: Surface
Accessories:

Volts: 120/208 Wye
Phases: 3
Wires: 4

Mains Type: MLO
Bus Rating: 100 A

A.I.C. Rating: 10k
Available Fault Current: 5k

CKT	Circuit Description	Trip	Poles	A		B		C		Poles	Trip	Circuit Description	CKT
1	RECEPTACLES - 121 SMALL COPIERS	20 A	1	600 VA	900 VA					1	20 A	RECEPTACLES - 128	2
3	RECEPTACLE - 121 COPIER	20 A	1			500 VA	360 VA			1	20 A	FLOOR BOX - 128 CONF TABLE	4
5	RECEPTACLE - 121 COPIER	20 A	1					500 VA	0 VA	1	20 A	Spare	6
7	RECEPTACLE - 121 COPIER	20 A	1	500 VA	1620 VA					1	20 A	RECEPTACLES - 127	8
9	RECEPTACLE - 121 SHREDDER	20 A	1			500 VA	360 VA			1	20 A	FLOOR BOX - 127 CONF TABLE	10
11	RECEPTACLES - 121	20 A	1					900 VA	0 VA	1	20 A	Spare	12
13	FLOOR BOX - 121 CONF TABLE	20 A	1	360 VA	0 VA					1	20 A	Spare	14
15	RECEPTACLES - 121 DESKS	20 A	1			1620 VA	0 VA			1	20 A	Spare	16
17	Spare	20 A	1					0 VA	0 VA	1	20 A	Spare	18
19	RECEPTACLES - 121 DESKS	20 A	1	1440 VA	0 VA					1	20 A	Spare	20
21	Spare	20 A	1			0 VA	0 VA			1	20 A	Spare	22
23	RECEPTACLES - 123	20 A	1					1080 VA	0 VA	1	20 A	Spare	24
25	FLOOR BOX - 123 CONF TABLE	20 A	1	360 VA	0 VA					1	20 A	Spare	26
27	Spare	20 A	1			0 VA	0 VA			1	20 A	Spare	28
29	RECEPTACLES - 130B	20 A	1					1080 VA	0 VA	1	20 A	Spare	30
31	RECEPTACLES - 130A	20 A	1	1260 VA	0 VA					1	20 A	Spare	32
33	RECEPTACLES - 128	20 A	1			1080 VA	0 VA			1	20 A	Spare	34
35	SPARE	20 A	1					0 VA	0 VA	1	20 A	SPARE	36
37	SPARE	20 A	1	0 VA	0 VA					1	20 A	SPARE	38
39	SPARE	20 A	1			0 VA	0 VA			1	20 A	SPARE	40
41	SPARE	20 A	1					0 VA	0 VA	1	20 A	SPARE	42
			Total Load:	7040 VA		4420 VA		3560 VA					

Load Classification	Connected Load	Design Factor	Estimated Demand	Panel Totals	
Other	0 VA	0.00%	0 VA		
RECEPTACLES	13580 VA	86.82%	11790 VA	**Total Conn. Load:**	15020 VA
Receptacle	1440 VA	100.00%	1440 VA	**Total Est. Demand:**	13230 VA
				Total Conn. Current:	42 A
				Total Est. Demand Current:	37 A
				Non-Coincident...	0 A
				Total Demand Current:	37 A

Notes:
1. TOTAL DEMAND CURRENT INCORPORATES ONLY THE NON-COINCIDENT PEAK LOAD BETWEEN HEATING AND COOLING.

2RL1C

Location: TR 126
Supply From: 2RL1
Mounting: Surface
Accessories:

Volts: 120/208 Wye
Phases: 3
Wires: 4

Mains Type: MLO
Bus Rating: 100 A

A.I.C. Rating: 10k
Available Fault Current: 5k

CKT	Circuit Description	Trip	Poles	A		B		C		Poles	Trip	Circuit Description	CKT
1													2
3	TR 126 - RACK 1 - 208V	30 A	2			250 VA							4
5								250 VA					6
7	TR 126 - RACK 1 - 120V	30 A	1	500 VA									8
9	TR 126 - RACK 1 - 120V	30 A	1			500 VA							10
11	TR 126 - RACK 2 - 208V	30 A	2					250 VA					12
13				250 VA									14
15	TR 126 - RACK 2 - 120V	30 A	1			500 VA							16
17	TR 126 - RACK 2 - 120V	30 A	1					500 VA					18
19	TR 126 - RACK 3 - 208V	30 A	2	250 VA									20
21						250 VA							22
23	TR 126 - RACK 3 - 120V	30 A	1					500 VA					24
25	TR 126 - RACK 3 - 120V	30 A	1	500 VA									26
27													28
29													30
31													32
33													34
35													36
37													38
39													40
41													42
			Total Load:	1500 VA		1500 VA		1500 VA					

Load Classification	Connected Load	Design Factor	Estimated Demand	Panel Totals	
RECEPTACLES	4500 VA	100.00%	4500 VA		
				Total Conn. Load:	4500 VA
				Total Est. Demand:	4500 VA
				Total Conn. Current:	12 A
				Total Est. Demand Current:	12 A
				Non-Coincident...	0 A
				Total Demand Current:	12 A

Notes:
1. TOTAL DEMAND CURRENT INCORPORATES ONLY THE NON-COINCIDENT PEAK LOAD BETWEEN HEATING AND COOLING.

STATE OF TEXAS
AARON McWHORTER
100310
LICENSED
PROFESSIONAL ENGINEER
6-24-2021

US Army Corps of Engineers ®

MARK	DESCRIPTION	DATE

ISSUE DATE: JUNE 2022
CONTRACT NO.: W912PP-22-R-0021

DESIGNED BY: A. MCWHORTER
DRAWN BY: S. WALCHER
CHECKED BY: V. MONTELLANO
SUBMITTED BY: E. OLNESS
ANSI D
FILENAME: K469-951-E-604

US ARMY CORPS OF ENGINEERS
ALBUQUERQUE
ALBUQUERQUE, NEW MEXICO

JACOBS
JACOBS ENGINEERING GROUP INC.
777 Main Street
Fort Worth, TX 76102

COMBAT RESCUE HELICOPTER SIMULATOR FACILITY
KIRTLAND AIR FORCE BASE (AFB),
BERNALILLO COUNTY, NEW MEXICO

CRH SIMULATOR FACILITY ADAL
SCHEDULES

SHEET ID
951B
E-604

READY TO ADVERTISE

2BL1

Location: ELEC 138
Supply From: T2BL1
Mounting: Surface
Accessories:

Volts: 120/208 Wye
Phases: 3
Wires: 4

Mains Type: MCB
Bus Rating: 225 A
MCB Rating 225 A

A.I.C. Rating: 10k
Available Fault Current: 6k

CKT	Circuit Description	Trip	Poles	A		B		C		Poles	Trip	Circuit Description	CKT
1				9041 VA	0 VA								2
3	2BL1A	100 A	3			8040 VA	0 VA			3	60 A	SPD	4
5								5335 VA	0 VA				6
7				1750 VA									8
9	2BL1B	100 A	3			2000 VA							10
11								1500 VA					12
13	RECEPTACLES ELEC MECH 139, 138	20 A	1	1625 VA									14
15	CH-2 CONTROLS	20 A	1			50 VA							16
17	B-1 & B-2 MECH 139	20 A	1					1440 VA					18
19	RECEPTACLES MEZZANINE	20 A	1	900 VA									20
21	CH-1 CONTROLS	20 A	1			50 VA							22
23	CH-1,2 HEAT TRACE	20 A	1					500 VA					24
25	RECEPTACLES CATV TR 126	20 A	1	500 VA									26
27	RECEPTACLES TR 126	20 A	1			720 VA							28
29													30
31													32
33													34
35													36
37													38
39													40
41													42
			Total Load:	13816 VA		10860 VA		8775 VA					

Load Classification	Connected Load	Design Factor	Estimated Demand	Panel Totals	
HVAC	1440 VA	100.00%	1440 VA		
Other	7931 VA	100.00%	7931 VA	**Total Conn. Load:**	33451 VA
RECEPTACLES	23360 VA	71.40%	16680 VA	**Total Est. Demand:**	26771 VA
Receptacle	720 VA	100.00%	720 VA	**Total Conn. Current:**	93 A
				Total Est. Demand Current:	74 A
				Non-Coincident...	0 A
				Total Demand Current:	74 A

Notes:
1. TOTAL DEMAND CURRENT INCORPORATES ONLY THE NON-COINCIDENT PEAK LOAD BETWEEN HEATING AND COOLING.

2BL1A

Location: ELEC 138
Supply From: 2BL1
Mounting: Surface
Accessories:

Volts: 120/208 Wye
Phases: 3
Wires: 4

Mains Type: MLO
Bus Rating: 100 A

A.I.C. Rating: 10k
Available Fault Current: 5k

CKT	Circuit Description	Trip	Poles	A		B		C		Poles	Trip	Circuit Description	CKT
1	RECEPTACLES - 133	20 A	1	1080 VA	1261 VA					1	20 A	RECEPTACLES - 130 SIM 2	2
3	RECEPTACLE - 133 VENDING MACHINE	20 A	1			360 VA	1260 VA			1	20 A	RECEPTACLES - 120 ATD	4
5	RECEPTACLE - 133 VENDING MACHINE	20 A	1					360 VA	360 VA	1	20 A	RECEPTACLE - 120 DESK	6
7	RECEPTACLE - 133 VENDING MACHINE	20 A	1	1180 VA	40 VA					1	20 A	SECURITY DOOR LOCK	8
9	RECEPTACLE - 133 REFRIGERATOR	20 A	1			1180 VA	860 VA			1	20 A	RECEPTACLES - 129 DESKS	10
11	RECEPTACLE - 133 MICROWAVE	20 A	1					1000 VA	900 VA	1	20 A	RECEPTACLES - 129 DESKS	12
13	RECEPTACLE - 133 DISH WASHER	20 A	1	1000 VA	720 VA					1	20 A	RECEPTACLES - 129 DESKS	14
15	RECEPTACLE - 133 COFFEE	20 A	1			1000 VA	500 VA			1	20 A	RECEPTACLE - 129 COPIER	16
17	RECEPTACLE - 133 ICE MACHINE	20 A	1					1180 VA	35 VA	1	20 A	SECURITY DOOR LOCK	18
19	RECEPTACLE - 133 MICROWAVE	20 A	1	1000 VA	360 VA					1	20 A	FLOOR BOX - 129	20
21	RECEPTACLES - 132	20 A	1			360 VA	1080 VA			1	20 A	RECEPTACLES - C101	22
23	SINKS - 132	20 A	1					500 VA	500 VA	1	20 A	RECEPTACLE - C101 EWC	24
25	TOILETS - 131, 132	20 A	1	1000 VA	360 VA					1	20 A	RECEPTACLE - BREAK ROOM 133	26
27	RECEPTACLES - 131	20 A	1			360 VA							28
29	SINKS - 131	20 A	1					500 VA					30
31	RECEPTACLES - 124, 125	20 A	1	1040 VA									32
33	RECEPTACLES - 130 SIM 3	20 A	1			1080 VA							34
35	SPARE	20 A	1					0 VA	0 VA	1	20 A	SPARE	36
37	SPARE	20 A	1	0 VA	0 VA					1	20 A	SPARE	38
39	SPARE	20 A	1			0 VA	0 VA			1	20 A	SPARE	40
41	SPARE	20 A	1					0 VA	0 VA	1	20 A	SPARE	42
			Total Load:	9041 VA		8040 VA		5335 VA					

Load Classification	Connected Load	Design Factor	Estimated Demand	Panel Totals	
Other	2076 VA	100.00%	2076 VA		
RECEPTACLES	19620 VA	75.48%	14810 VA	**Total Conn. Load:**	22416 VA
Receptacle	720 VA	100.00%	720 VA	**Total Est. Demand:**	17606 VA
				Total Conn. Current:	62 A
				Total Est. Demand Current:	49 A
				Non-Coincident...	0 A
				Total Demand Current:	49 A

Notes:
1. TOTAL DEMAND CURRENT INCORPORATES ONLY THE NON-COINCIDENT PEAK LOAD BETWEEN HEATING AND COOLING.

2BH2

Location: ELEC 138
Supply From: 2DP1
Mounting: Surface
Accessories:

Volts: 480/277 Wye
Phases: 3
Wires: 4

Mains Type: MLO
Bus Rating: 100 A

A.I.C. Rating: 35k
Available Fault Current: 18k

CKT	Circuit Description	Trip	Poles	A		B		C		Poles	Trip	Circuit Description	CKT
1	LTG RM 138, 126, 139	20 A	1	352 VA									2
3	LTG RM 122, 136, 121, 123	20 A	1			1591 VA							4
5	LTG RM 132, 131, 124, 125, C101	20 A	1					590 VA					6
7	EXTERIOR LIGHTING	20 A	1	137 VA									8
9	LTG RM 130B, 128, 130A, 127, 129	20 A	1			1227 VA							10
11	LTG RM 133, 134, 135, 137	20 A	1					1426 VA					12
13	LTG MEZZ	20 A	1	252 VA									14
15	EXTERIOR LIGHTING	20 A	1			213 VA							16
17	LTG RM 130 NORTH	20 A	1					2605 VA					18
19	LTG RM 130 SOUTH	20 A	1	2279 VA									20
21	LTG RM 120 EAST	20 A	1			1986 VA							22
23	LTG RM 120 WEST	20 A	1					1790 VA					24
25													26
27													28
29													30
31													32
33													34
35													36
37													38
39													40
41													42
			Total Load:	2991 VA		5006 VA		6411 VA					

Load Classification	Connected Load	Design Factor	Estimated Demand	Panel Totals	
LTG	349 VA	100.00%	349 VA		
Lighting	9036 VA	100.00%	9036 VA	**Total Conn. Load:**	14402 VA
Other	5035 VA	100.00%	5035 VA	**Total Est. Demand:**	14402 VA
				Total Conn. Current:	17 A
				Total Est. Demand Current:	17 A
				Non-Coincident...	0 A
				Total Demand Current:	17 A

Notes:
1. TOTAL DEMAND CURRENT INCORPORATES ONLY THE NON-COINCIDENT PEAK LOAD BETWEEN HEATING AND COOLING. 2. 60AMP INCOMING FEEDER

2BL1B

Location: ELEC 138
Supply From: 2BL1
Mounting: Surface
Accessories:

Volts: 120/208 Wye
Phases: 3
Wires: 4

Mains Type: MCB
Bus Rating: 100 A
MCB Rating 100 A

A.I.C. Rating: 10k
Available Fault Current: 5k

CKT	Circuit Description	Trip	Poles	A		B		C		Poles	Trip	Circuit Description	CKT
1	FIRE AASD ATD (AIRCREW TRAINING...	20 A	1	500 VA	250 VA					1	20 A	FIRE SMOKE DAMPER	2
3	FIRE IMAGE GENERATOR 2 130A	20 A	1			1000 VA	500 VA			1	20 A	FIRE SMOKE DAMPERS	4
5	FIRE AMP/RPS CORRIDOR C101	20 A	1					500 VA	1000 VA	1	20 A	FIRE SMOKE DAMPERS	6
7	FIRE CARP/AASD IMAGE GENERATOR ...	20 A	1	1000 VA									8
9	FIRE AASD SIMULATOR 2 130	20 A	1			500 VA							10
11													12
13													14
15	SPARE	20 A	1			0 VA	0 VA			1	20 A	SPARE	16
17	SPARE	20 A	1					0 VA	0 VA	1	20 A	SPARE	18
			Total Load:	1750 VA		2000 VA		1500 VA					

Load Classification	Connected Load	Design Factor	Estimated Demand	Panel Totals	
Other	5250 VA	100.00%	5250 VA		
				Total Conn. Load:	5250 VA
				Total Est. Demand:	5250 VA
				Total Conn. Current:	15 A
				Total Est. Demand Current:	15 A
				Non-Coincident...	0 A
				Total Demand Current:	15 A

Notes:
1. TOTAL DEMAND CURRENT INCORPORATES ONLY THE NON-COINCIDENT PEAK LOAD BETWEEN HEATING AND COOLING.

STATE OF TEXAS
AARON McWHORTER
100310
LICENSED PROFESSIONAL ENGINEER
6.24.2021

US Army Corps of Engineers ®

MARK	DESCRIPTION	DATE

ISSUE DATE: JUNE 2022
CONTRACT NO.: W912PP-22-R-0021
DESIGNED BY: A. MCWHORTER
DRAWN BY: S. WALCHER
CHECKED BY: V. MONTELLANO
SUBMITTED BY: E. OLMESS
SIZE: ANSI D
FILENAME: K486-951-E-605

US ARMY CORPS OF ENGINEERS
ALBUQUERQUE
ALBUQUERQUE, NEW MEXICO

JACOBS
JACOBS ENGINEERING GROUP INC.
777 Main Street
Fort Worth, Texas 76102

COMBAT RESCUE HELICOPTER SIMULATOR FACILITY
KIRTLAND AIR FORCE BASE (AFB)
BERNALILLO COUNTY, NEW MEXICO
CRH SIMULATOR FACILITY ADAL
SCHEDULES

SHEET ID
951B
E-605

READY TO ADVERTISE

GENERAL NOTES - ONE-LINE

A	PROVIDE ARC FLASH LABELLING ON PANELBOARDS UTILIZING EXISTING AVAILABLE FAULT CURRENT INDICATED.
B	COORDINATE INSTALLATION WITH EXISTING CONDITIONS AND COORDINATE REQUIRED ELECTRICAL SHUTDOWN REQUIRED WITH CONTRACTING OFFICER.

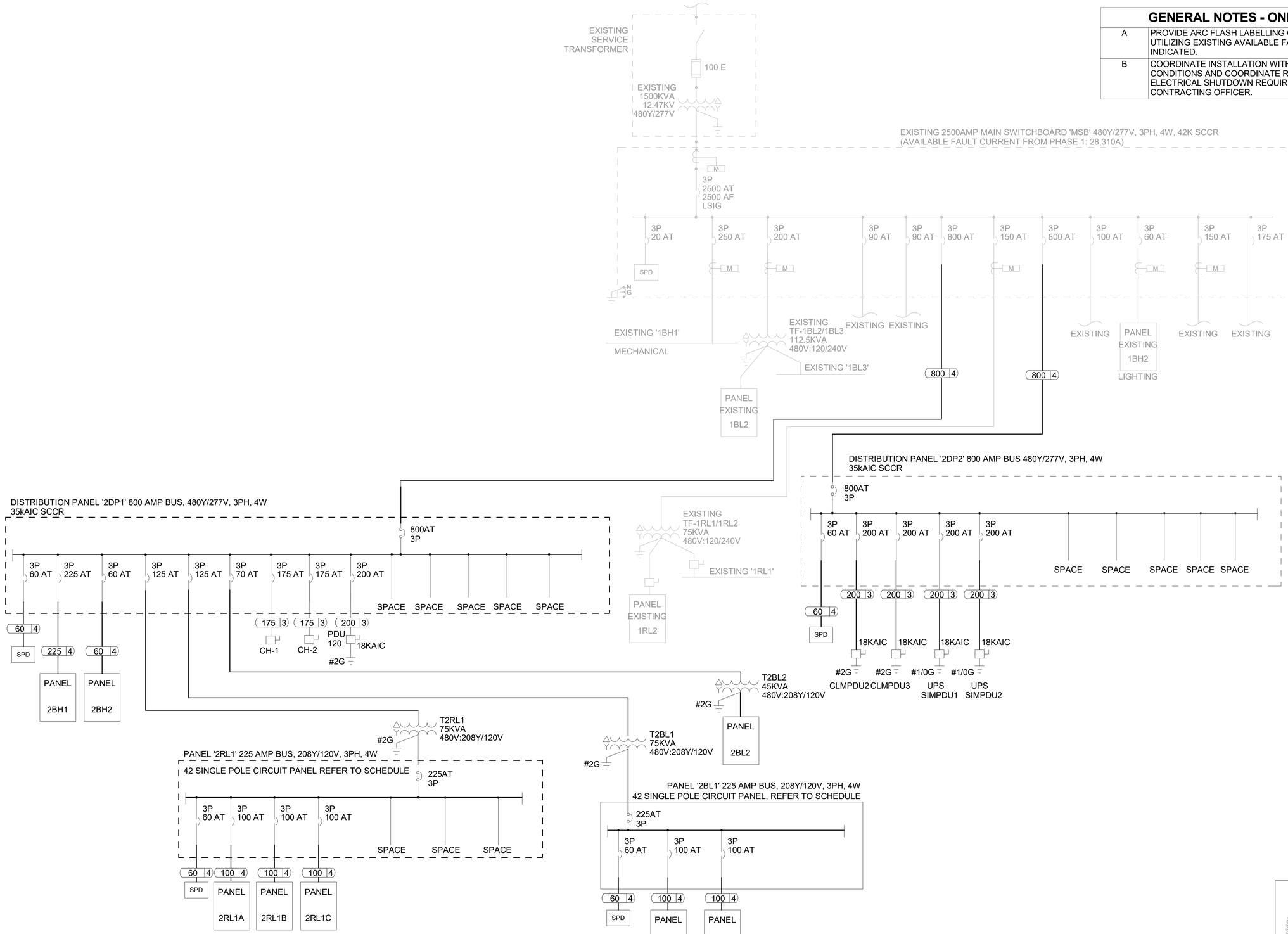

A1 ONE-LINE DIAGRAM - BUILDING
NTS

STATE OF TEXAS
AARON McWHORTER
100310
LICENSED PROFESSIONAL ENGINEER
6.24.2021

READY TO ADVERTISE

US Army Corps of Engineers ®

MARK	DESCRIPTION	DATE

ISSUE DATE: JUNE 2022
CONTRACT NO.: W912PP-22-R-0021

DESIGNED BY: A. MCWHORTER
DRAWN BY: S. WALCHER
CHECKED BY: V. MONTELLANO
SUBMITTED BY: E. CLINESS
SIZE ANSI D
FILENAME: K486-951-E-701

US ARMY CORPS OF ENGINEERS
ALBUQUERQUE
ALBUQUERQUE, NEW MEXICO

JACOBS
JACOBS ENGINEERING GROUP INC.
777 Main Street
Fort Worth, TX 76102

COMBAT RESCUE HELICOPTER SIMULATOR FACILITY
KIRTLAND AIR FORCE BASE (AFB),
BERNALILLO COUNTY, NEW MEXICO

CRH SIMULATOR FACILITY ADAL
ONE-LINE DIAGRAM

SHEET ID
951B
E-701

TELECOMMUNICATIONS SYMBOLS

- TWO-POST RACK WITH VERTICAL WIRE MANAGERS
- DATA CABINET
- TELEPHONE WALL OUTLET - (1) GREEN CAT. 6 (+48")
- SIPR/SMARTNET DATA WALL OUTLET - (1) 2-STRAND RED OM3 FIBER WITH SIMPLEX SC CONNECTORS AND (1) 2-STRAND ORANGE OM3 FIBER WITH LC DUPLEX CONNECTORS
  M=MODULAR FURNITURE OUTLET
- NIPR DATA WALL OUTLET - (4) GREEN CAT. 6
  M=MODULAR FURNITURE OUTLET
- AAR DATA WALL OUTLET - CABLES PROVIDED AND INSTALLED BY SIMULATOR CONTRACTOR
- ANALOG VOICE/NIPR DATA WALL OUTLET - (4) GREEN CAT. 6
  M=MODULAR FURNITURE OUTLET
- ANALOG VOICE/NIPR DATA FLOOR OUTLET - (4) GREEN CAT. 6
- SIPR/SMARTNET DATA FLOOR OUTLET - (1) 2-STRAND RED OM3 FIBER WITH SIMPLEX SC CONNECTORS AND (1) 2 STRAND ORANGE OM3 FIBER WITH DUPLEX LC CONNECTORS.
- POWER/ANALOG VOICE/DATA FLOOR OUTLET
  AV=AUDIO/VISUAL CONNECTION
- WALL MOUNTED JUNCTION BOX WITH FLEXIBLE WHIP TO FURNITURE BASE POWER FEED. MOUNT AT 18-INCHES ABOVE FINISHED FLOOR
  N=NIPR S=SIPR/SMARTNET
- PRIMARY BONDING BUSBAR (PBB); SECONDARY BONDING BUSBAR (SBB)
- BEP — BUILDING ENTRANCE PROTECTION BLOCKS
- BASKET CABLE TRAY
- LADDER RACK
- CCTV CAMERA DATA OUTLET
- WAP — NIPR WIRELESS ACCESS POINT OUTLET (2) CAT. 6 GREEN
- A V — CEILING MOUNTED AUDIO-VISUAL OUTLET
- A V — WALL MOUNTED AUDIO-VISUAL OUTLET
- PULL BOX
- T — MAINTENANCE HOLE, E=ELEC, T=TELECOMM, P=PULLBOX, H=HANDHOLE
- Tx — EXISTING MAINTENANCE HOLE, E=ELEC, T=TELECOM, P=PULLBOX, H=HANDHOLE
- T — TELECOMMUNICATIONS DUCTBANK
- Tx — EXISTING TELECOMMUNICATIONS DUCTBANK
- TP — TELECOM POLE
  N = NIPR S = SIPR
- TV — CATV OUTLET
- P — POKE THROUGH
  N = NIPR, S = SIPR
- UNDERGROUND CONDUIT
- DB — DIRECT BURIED CABLE

TELECOMMUNICATIONS GENERAL NOTES

1. ALL SYMBOLS, ABBREVIATIONS AND GENERAL NOTES SHOWN ARE NOT NECESSARILY USED ON THIS PROJECT.
2. THESE CONTRACT DOCUMENTS ARE DIAGRAMMATIC AND SHOW THE DESIGN INTENT.
3. ALL WORK SHALL COMPLY WITH ALL APPLICABLE CODES, AMENDMENTS, RULES, REGULATIONS, ORDINANCES, LAWS, ORDERS, APPROVALS, ETC., THAT ARE REQUIRED FOR THIS PROJECT.
4. COORDINATE THE WORK OF YOUR TRADE WITH ALL OTHER TRADES, AS WELL AS PORTABLE MOBILE EQUIPMENT.
5. DIRECT ALL WORK USING BEST PRACTICES. COORDINATE ALL CONSTRUCTION MEANS, METHODS, TECHNIQUES, SEQUENCES, AND PROCEDURES AND COORDINATE ALL PORTIONS OF THIS PROJECT.
6. DATA CABLING MUST BE RUN IN CONDUIT FROM BASKET TRAY TO CABLE OUTLET. CONDUIT MUST BE BONDED TO THE BASKET TRAYS.
7. CONDUIT FILL MUST NOT EXCEED 40%. INSTALLATION OF CONDUIT AND CABLING MUST BE IN COMPLIANCE WITH NFPA 70 (NEC).
8. MINIMUM CONDUIT SIZE FOR HORIZONTAL CABLING MUST BE 1".
9. ALL INTERIOR CABLING MUST BE PLENUM RATED.
10. STANDARD HORIZONTAL NIPR DATA CABLING MUST BE (4) GREEN CAT. 6 UTP CABLES. WALL PHONES MUST BE (1) GREEN CAT. 6 CABLE.
11. AAR HORIZONTAL CABLING WILL BE INSTALLED BY THE SIMULATOR CONTRACTOR.
12. STANDARD HORIZONTAL SIPR DATA CABLING MUST BE (1) 2-STRAND RED OM3 FIBER OPTIC CABLE.
13. STANDARD HORIZONTAL SMARTNET CABLING MUST BE (1) 2-STRAND ORANGE OM3 FIBER OPTIC CABLE.
14. STANDARD DATA OUTLETS MUST BE 8-POSITION 8-CONTACT CATEGORY 6, COLOR-MATCHED TO THE CABLE AND WIRED WITH THE TIA T568B CONFIGURATION.
15. AAR DATA OUTLETS WILL BE INSTALLED BY THE SIMULATOR CONTRACTOR.
16. FIBER OPTIC DATA OUTLETS MUST BE SIMPLEX SC FOR SIPR AND DUPLEX LC CONNECTORS FOR SMARTNET, COLOR-MATCHED TO THE CABLE.
17. STANDARD OSP FIBER OPTIC CABLES MUST BE A 12 STRAND SINGLEMODE FIBER OPTIC CABLE (1) CABLE EACH FOR NIPR, SIPR AND SMARTNET. CABLE WILL ROUTE FROM THE MAIN TR IN PHASE 1. INSTALL 3-CELL FABRIC INNERDUCT FOR THE FIBER OPTIC CABLE. ADDITIONAL 12 STRAND SINGLEMODE MUST BE INSTALLED FROM THE MAINTENANCE HOLE INSTALLED UNDER PHASE 2.
18. STANDARD OSP COPPER CABLE MUST BE 50 PAIR. CABLE MUST BE INSTALLED FROM THE HANDHOLE INSTALLED UNDER PHASE 2
19. ALL CABINETS, VERTICAL AND HORIZONTAL WIRE MANAGERS LOCATED IN THE TELECOM ROOMS MUST BE BLACK IN COLOR.
20. BASKET TRAY RADIUS DROPOUTS (WATERFALLS) ARE REQUIRED WHERE FIBER OPTIC AND COPPER CABLES TRANSITION IN ELEVATION. PROVIDE VELCRO TIES FOR CABLE SUPPORT IN TRANSITIONS.
21. NYLON CABLE TIES MUST NOT BE USED FOR CABLE SUPPORT, BUNDLING, OR FOR ANY OTHER MEANS OF RESTRAINING CABLES.
22. THE CONTRACTOR SHALL INSTALL ALL COMPONENTS USING MANUFACTURER'S RECOMMENDED INSTALLATION PROCEDURES. ALL MATERIALS MUST BE NEW AND IN ORIGINAL MANUFACTURER'S PACKAGING.
23. WHERE RACEWAYS CROSS STRUCTURAL EXPANSION JOINTS, PROVIDE EXPANSION JOINT FITTINGS.
24. THE CONTRACTOR MUST MAINTAIN ALL CABLE MINIMUM BENDING RADII ACCORDING TO THE CABLE MANUFACTURER.
25. SEISMIC BRACING OF BASKET TRAY, CABINETS, LADDER TRAY, CONDUITS, AND ALL OTHER SUSPENDED APPURTENANCES MUST BE BRACED PER DESIGN CATEGORY 'D' AND AN IMPORTANCE FACTOR OF 1.5 FOR ALL SEISMIC SUPPORT AND BRACING.
26. CONTRACTOR MUST PROVIDE CAT. 6, DUPLEX OM3 AND DUPLEX SINGLEMODE FIBER OPTIC PATCH CORDS FOR EACH WIRED CONNECTION PORT, COLOR MATCHED TO THE CABLE. CONTRACTOR MUST COORDINATE PATCH CORD LENGTHS WITH THE SYSTEM OWNER. PATCH CORDS ARE CONTRACTOR FURNISHED AND GOVERNMENT INSTALLED.
27. PROVIDE 4' X 8' X 3/4" FIRE TREATED PLYWOOD ON ALL FOUR WALLS IN THE TELECOM ROOMS AT 12" AFF WITH THE FIRE STAMP VISIBLE.
28. NO PIPING, DUCTS, OR EQUIPMENT FOREIGN TO TELECOMMUNICATIONS ROOMS WILL BE PERMITTED TO BE LOCATED IN OR ABOVE THE TELECOMMUNICATIONS ROOM.
29. A MINIMUM OF 2" SEPARATION IS REQUIRED BETWEEN NIPR AND SIPR/SMARTNET DATA OUTLETS.
30. NIPR, COMMERCIAL, SIPR AND SMARTNET WILL BE INSTALLED IN THE SAME BASKET TRAY WITH A DIVIDER BETWEEN COPPER AND FIBER OPTIC CABLES.
31. PROVIDE A 2" CONDUIT FOR AAR CABLES INSTALLED IN CONDUIT FROM THE IG ROOM DATA CABINET TO THE AAR DESK IN THE MULTI-PURPOSE ROOMS AS SHOWN ON THE PLAN DRAWINGS.
32. WIRELESS ACCESS POINTS DATA OUTLETS SHALL RECEIVE (2) GREEN CAT. 6 CABLES FOR NIPR WIFI.
33. CATV OUTLETS MUST RECEIVE ONE WHITE RG-6U QUAD SHIELDED CABLE.
34. CCTV CAMERAS LOCATIONS MUST RECEIVE ONE GREEN CAT. 6 CABLE. ACCESS CONTROL SYSTEM AND INTRUSION DETECTION SYSTEM CONTROLLER LOCATIONS MUST RECEIVE TWO GREEN CAT. 6 CABLE.
35. WALL MOUNTED FACEPLATES FOR NIPR, ANALOG VOICE AND SIPR/SMARTNET OUTLETS MUST BE ANGLED 4 PORT OR 8 PORT. SEE SHEET T-501.
36. CONTRACTOR TO COLOR CODE VISIBLE CONDUITS FOR DATA CABLING. GREEN FOR NIPRNET, RED FOR SIPRNET/SMARTNET, RED FOR AAR CABLES AND WHITE FOR CATV.
37. FOR SITE TELECOMMUNICATIONS DEMOLITION SEE ELECTRICAL SHEET ED101 AND NEW INSTALLATION SEE ELECTRICAL SHEET ES101.
38. PROVIDE (1) 12 STRAND SINGLEMODE OSP FIBER OPTIC CABLE FROM THE HANDHOLE OUTSIDE OF PHASE 1 TO NIPR CABINET IN PHASE 1. CABLE WILL REQUIRE FUSION SPLICING IN THE HANDHOLE.

SECURITY SYMBOLS

- REX — REQUEST TO EXIT SENSOR
- BMS — BALANCED MAGNETIC SWITCH HIGH SECURITY
- HSS — MAGNASPHERE L2 HIGH SECURITY SWITCH
- EL — 24 VAC ELECTRIC LOCK
- X10 — DIAL COMBINATION LOCK
- ACS — ACCESS CONTROL SYSTEM PANEL
- CR — HID PROXIMITY CARD READER
- PANORAMIC PIR
- ID — PASSIVE INFRARED DETECTOR
- PUSH BUTTON DOOR RELEASE
- FIXED POSITION CAMERA - 1 GREEN CAT6
- PTZ — PTZ CAMERA
- IDS — INTRUSION DETECTION SYSTEM PANEL
- D — DURESS BUTTON
- KP — ALARM KEYPAD
- ###X — DOOR TAG

SECURITY GENERAL NOTES

1. THE CONTRACTOR MUST PROVIDE BOX AND CONDUIT ONLY FOR SECURITY SYSTEMS.
2. MINIMUM CONDUIT SIZE SHALL BE 1" WITH THE EXCEPTION OF SECURITY "DROP CONDUITS" AT DOOR LOCATIONS, WHICH MAY BE 1/2". ALL CONDUITS SHALL BE EMT: EXCEPTIONS INCLUDE;
   - 2.1 RIGID STEEL FOR EXPOSED AREAS OR AREAS ACCESSIBLE TO UNSCREENED PERSONS.
   - 2.2 PVC FOR BURIED OR CAST-IN-PLACE CONDUITS
   - 2.3 GALVANIZED RIGID STEEL FOR EXTERIOR CONDUITS
   - 2.4 FLEXIBLE CONDUIT FOR CONCEALED DROPS TO DOOR DEVICES.
3. CONDUIT FILL SHALL NOT EXCEED 40%. INSTALLATION OF CONDUIT AND WIRING SHALL BE IN COMPLIANCE WITH NATIONAL ELECTRICAL CODE (NEC). ALL WIRING SHALL BE HOMERUN, UNLESS OTHERWISE NOTED. ANY SPLICES MUST BE APPROVED BY THE DESIGNER.
4. CONDUITS PENETRATING FIRE RATED WALLS OR FLOORS SHALL USE U.L. APPROVED DEVICES IN ORDER TO MAINTAIN FIRE & ICD -705 RATING OF THE WALL OR FLOOR.
5. AT THE START OF CONSTRUCTION AND/OR BID PHASE. CONTRACTOR WILL BE RESPONSIBLE TO FIELD VERIFY ALL EXISTING CONDITIONS OF BUILDING SYSTEM AND PHYSICAL CHARACTERISTICS OF THE BUILDING/FACILITY PRIOR TO START OF WORK TO ENSURE THERE ARE NO CONFLICTS WITH THE CONSTRUCTION DOCUMENTS VERSES EXISTING FIELD CONDITIONS.
6. THE CONTRACTOR MUST COORDINATE THE WORK WITH THAT OF THE OTHER TRADES ON THE JOB. CONFLICTS WITH OTHER TRADES MUST BE BROUGHT TO THE ATTENTION OF THE OWNER PRIOR TO INSTALLATION. WORK SHOULD ALSO BE COORDINATED AROUND PORTABLE AND MOBILE EQUIPMENT.
7. ALL WORK MUST COMPLY WITH ALL APPLICABLE CODES, AMENDMENTS, RULES, REGULATIONS, ORDINANCES, LAWS, ORDERS, APPROVALS, ETC. THAT ARE REQUIRED BY PUBLIC AUTHORITIES. IN THE EVENT OF CONFLICT, THE MOST STRINGENT REQUIREMENTS SHALL GOVERN.
8. THE CONTRACTOR MUST SUPERVISE AND DIRECT THE WORK USING BEST SKILL AND ATTENTION. THE CONTRACTOR WILL BE SOLELY RESPONSIBLE FOR ALL CONSTRUCTION MEANS, METHODS, TECHNIQUES, SEQUENCES AND PROCEDURES AND FOR COORDINATING ALL PORTIONS OF THE WORK UNDER THE CONTRACT.
9. CONTRACTOR TO PROVIDE PULL LINES IN ALL CONDUITS.

REGISTERED COMMUNICATIONS DISTRIBUTION DESIGNER
Bicsi
Stephen A Leffler
BICSI ID # 110560
EXPIRES 12-31-22
RCDD
6.24.2021

US Army Corps of Engineers ®

MARK	DESCRIPTION	DATE

DESIGNED BY: S. LEFFLER
DRAWN BY: S. LEFFLER
CHECKED BY: R. RUBIO
SUBMITTED BY: E. OLMESS
SIZE: ANSI D
FILENAME: K486-951-T-001
ISSUE DATE: JUNE 2022
CONTRACT NO.: W912PP-22-R-0021

US ARMY CORPS OF ENGINEERS
ALBUQUERQUE
ALBUQUERQUE, NEW MEXICO

JACOBS
JACOBS ENGINEERING GROUP INC.
777 Main Street
Fort Worth, TX 76102

COMBAT RESCUE HELICOPTER SIMULATOR FACILITY
KIRTLAND AIR FORCE BASE (AFB),
BERNALILLO COUNTY, NEW MEXICO

CRH SIMULATOR FACILITY ADAL
GENERAL NOTES AND SYMBOLS

SHEET ID
951B
T-001

READY TO ADVERTISE

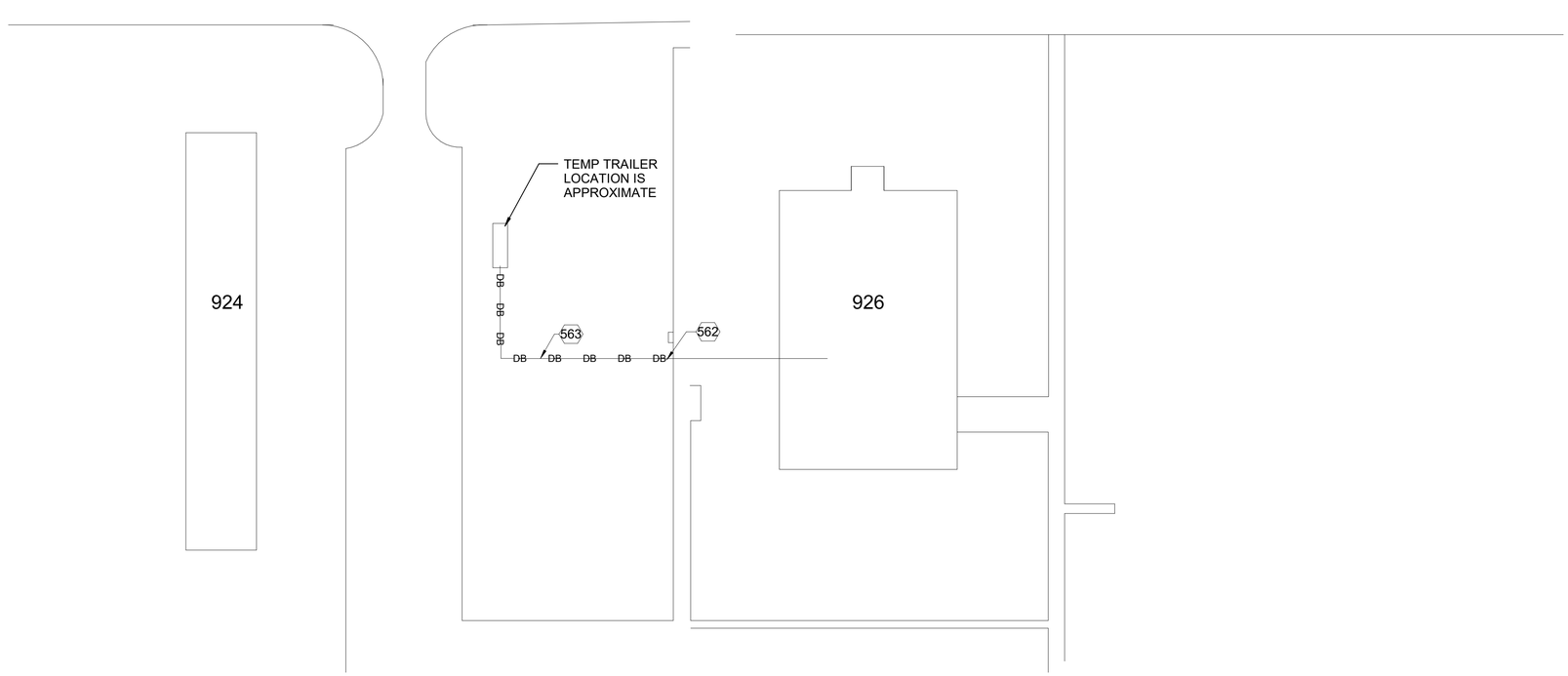

A1 TEMP TRAILER SITE PLAN
1" = 40'-0"

TEMP TRAILER SHEET NOTES

1	INTERCEPT CONDUIT FROM BUILDING 926. USE CONDUIT TO PULL DIRECT BURIAL CABLE INTO BUILDING 926.
2	PROVIDE 6-PAIR OSP DIRECT BURIAL CABLE FROM TEMP TRAILER TO BUILDING 926 BACKBOARD.
3	PROVIDE BUILDING ENTRANCE PROTECTOR AND MODULES ON BOTH ENDS OF DIRECT BURIAL CABLE.

SHEET KEYNOTES

562	INTERCEPT 4" CONDUITS FROM BUILDING 926.
563	PROVIDE DIRECT BURIED 6 PAIR CABLE FROM TRAILER TO BUILDING 926. PROVIDE ENTRANCE PROTECTOR AT EACH END.

GRAPHIC SCALE

0 20' 40' 80' 120'

GRAPHIC SCALE: 1" = 40'-0"

PROJECT NORTH

PLAN NORTH

REGISTERED COMMUNICATIONS DISTRIBUTION DESIGNER
Bicsi
Stephen A Leffler
BICSI ID # 110560
EXPIRES 12-31-22
RCDD
6.24.2021

US Army Corps of Engineers ®

MARK	DESCRIPTION	DATE

ISSUE DATE: JUNE 2022
CONTRACT NO.: W912PP-22-R-0021

DESIGNED BY: S. LEFFLER
DRAWN BY: S. LEFFLER
CHECKED BY: C. MEADE
SUBMITTED BY: E. OLMESS
SIZE: ANSI D
FILENAME: K468-951T-101

US ARMY CORPS OF ENGINEERS
ALBUQUERQUE
ALBUQUERQUE, NEW MEXICO

JACOBS
JACOBS ENGINEERING GROUP INC.
777 Main Street
Fort Worth, Texas 76102

COMBAT RESCUE HELICOPTER SIMULATOR FACILITY
KIRTLAND AIR FORCE BASE (AFB),
BERNALILLO COUNTY, NEW MEXICO

CRH SIMULATOR FACILITY ADAL
TEMP TRAILER SITE PLAN

SHEET ID
951B
T-101

READY TO ADVERTISE

A1 FLOOR PLAN - LEVEL 1 - OVERALL

1/16" = 1'-0"

TELECOMMUNICATIONS GENERAL NOTES

A. REFER TO SHEET T-001 FOR SYMBOLS AND GENERAL NOTES
B. SEE ES101 FOR TELECOM SITE PLANS.

KEY PLAN

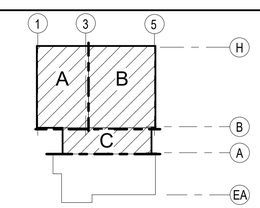

GRAPHIC SCALE

16 0 0 2 16 4 32

Scale: 1/16 INCH = 1 FOOT

PROJECT NORTH

PLAN NORTH

REGISTERED COMMUNICATIONS DISTRIBUTION DESIGNER
Bicsi
Stephen A Leffler
BICSI ID # 110560
EXPIRES 12-31-21
RCDD
6.24.2021

US Army Corps of Engineers ®

MARK	DESCRIPTION	DATE

US ARMY CORPS OF ENGINEERS
ALBUQUERQUE
ALBUQUERQUE, NEW MEXICO

JACOBS
JACOBS ENGINEERING GROUP INC.
777 Main Street
Fort Worth, TX 76102

DESIGNED BY: S. LEFFLER
DRAWN BY: S. LEFFLER
CHECKED BY: R. RUBIO
SUBMITTED BY: E. OLIVESS
SIZE: ANSI D
ISSUE DATE: JUNE 2022
CONTRACT NO.: W912PP-22-R-0021
FILENAME: K4069-951-T-110

COMBAT RESCUE HELICOPTER SIMULATOR FACILITY
KIRTLAND AIR FORCE BASE (AFB),
BERNALILLO COUNTY, NEW MEXICO

CRH SIMULATOR FACILITY ADAL
OVERALL FLOOR PLAN - LEVEL 1

SHEET ID
951B
T-110

READY TO ADVERTISE

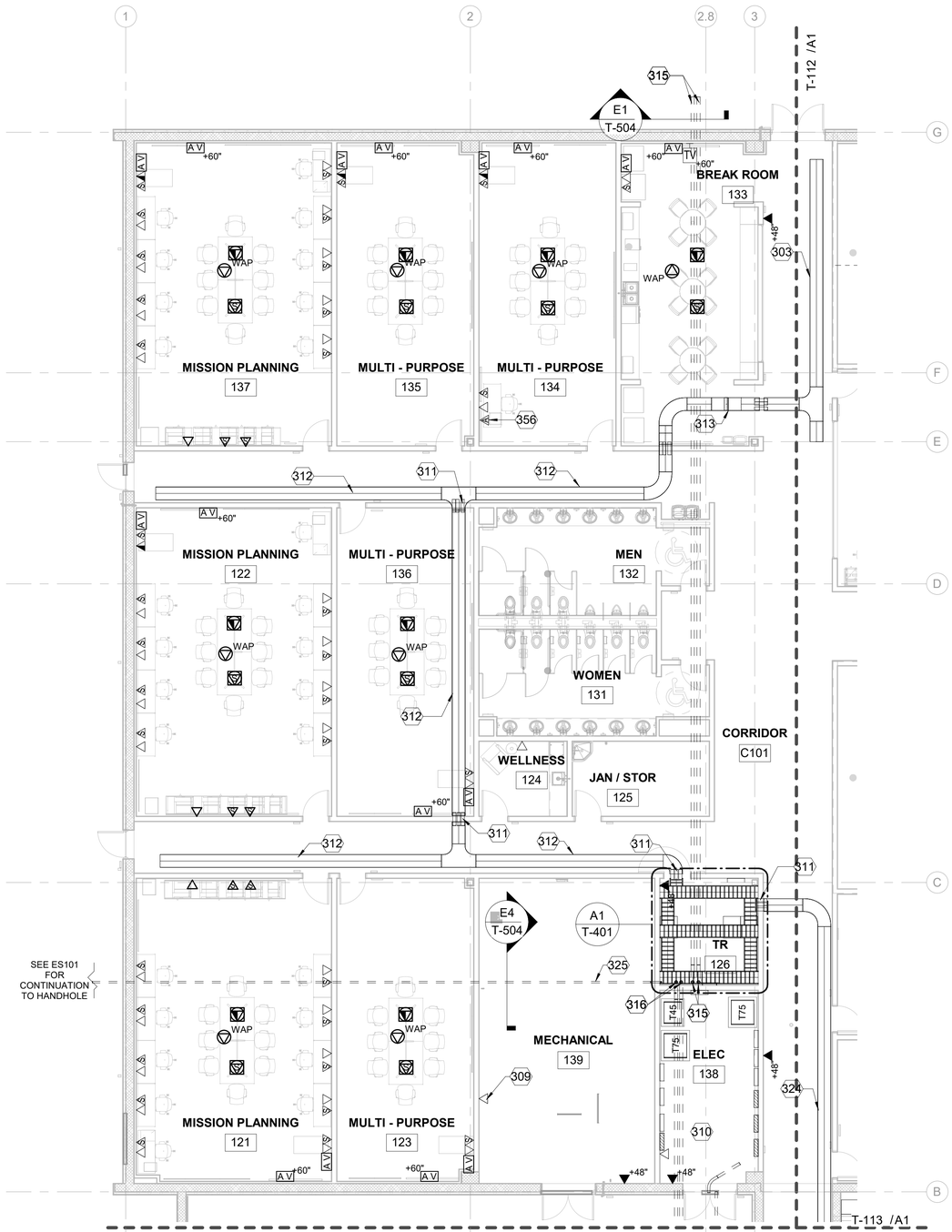

A1 PARTIAL FLOOR PLAN - LEVEL 1 - AREA A

1/8" = 1'-0"

TELECOMMUNICATIONS GENERAL NOTES

A. REFER TO SHEET T-001 FOR SYMBOLS AND GENERAL NOTES
B. SEE ES101 FOR TELECOM SITE PLANS.

SHEET KEYNOTES

303	18"W X 6"D BASKET TRAY WITH 6" DIVIDER AT 14'-6" AFF.
309	DATA OUTLET FOR BUILDING AUTOMATION SYSTEM (BAS). COORDINATE. INSTALLATION AND FINAL LOCATION WITH MECHANICAL CONTRACTOR
311	(3) 4" SLEEVES THROUGH WALL FOR CABLES. FIRESTOP AFTER CABLE INSTALLATION.
312	18"W X 6"D BASKET TRAY WITH 6" DIVIDER 18"AT 13'-0" AFF.
313	TRANSITION BASKET TRAY UP TO 14'-6" AFF.
315	(2) 4" PDS PVC CONDUITS, CONCRETE ENCASED, FROM PHASE 2 TELECOM ROOM STUBBED 6" AFF IN TR AND RUN AT -5'-6" BELOW FINISHED FLOOR. CONDUITS STUB 5'-0" OUTSIDE OF BUILDING FOR CONTINUATION TO FUTURE PHASE 3. CAP CONDUITS AND BURY WITH 18" OF SAND AND NATIVE FILL FOR NEXT PHASE.
316	PROVIDE (2) 4" PDS PVC CONDUITS, CONCRETE ENCASED, STUBBED 6" AFF IN PHASE 2 TELECOM ROOM, AND RUN AT -5'-6" BELOW FINISHED GRADE. CONNECT TO TWO EXISTING 4" CONDUITS STUBBED OUT OF PHASE 1 TELECOM ROOM. MATCH CONDUIT DEPTH AT CONNECTION POINT. PROVIDE 3" 3-CELL FABRIC INNERDUCT IN ONE CONDUIT.
324	18"W X 6"D BASKET TRAY WITH 6" DIVIDER AT 15'-0" AFF.
325	PROVIDE (1) 2" CONDUIT STUBBED AT 6" AFF AND RUN AT 5'-0" BELOW FINISHED GRADE FOR CATV FROM TELECOM ROOM TO CONTRACTOR PROVIDED CATV HANDHOLE. SEE SHEET ES101 FOR HANDHOLE LOCATION.
356	PROVIDE (1) 2-1/2" EMT CONDUIT FROM COMMUNICATIONS RACK IN IG ROOM 130B TO AAR WORKSTATION IN ROOM 134. ROUTE CONDUIT UNDER RAISED FLOOR IN THE IG ROOM AND ROUTE CONDUIT OVERHEAD OUTSIDE OF IG ROOM TO AAR WORKSTATION. PROVIDE RECESSED PULL BOX AT AAR WORK STATION AT 18" AFF TO CENTER. CABLES WILL BE INSTALLED BY SIMULATOR CONTRACTOR.

KEY PLAN

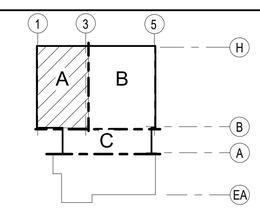

GRAPHIC SCALE

8 0 8 16

Scale: 1/8 INCH = 1 FOOT

PROJECT NORTH

PLAN NORTH

REGISTERED COMMUNICATIONS DISTRIBUTION DESIGNER
Bicsi
Stephen A Leffler
BICSI ID # 110560
EXPIRES 12-31-22
RCDD
6.24.2021

US Army Corps of Engineers ®

MARK	DESCRIPTION	DATE

DESIGNED BY: S. LEFFLER
DRAWN BY: S. LEFFLER
CHECKED BY: R. RUBIO
SUBMITTED BY: E. OLMESS
SIZE: ANSI D
ISSUE DATE: JUNE 2022
CONTRACT NO.: W912PP-22-R-0021
FILENAME: K4089-951-T-111

US ARMY CORPS OF ENGINEERS
ALBUQUERQUE
ALBUQUERQUE, NEW MEXICO

JACOBS
JACOBS ENGINEERING GROUP INC.
777 Main Street
Fort Worth, TX 76102

COMBAT RESCUE HELICOPTER SIMULATOR FACILITY
KIRTLAND AIR FORCE BASE (AFB),
BERNALILLO COUNTY, NEW MEXICO
CRH SIMULATOR FACILITY ADAL
TELECOM FLOOR PLAN - LEVEL 1 - AREA A

SHEET ID
951B
T-111

READY TO ADVERTISE

A1 PARTIAL FLOOR PLAN - LEVEL 1 - AREA B

1/8" = 1'-0"

TELECOMMUNICATIONS GENERAL NOTES

A. REFER TO SHEET T-001 FOR SYMBOLS AND GENERAL NOTES
B. SEE ES101 FOR TELECOM SITE PLANS.

SHEET KEYNOTES

303	18"W X 6"D BASKET TRAY WITH 6" DIVIDER AT 14'-6" AFF.
314	SURFACE MOUNT DATA OUTLETS ON SIDE OF TRENCH.
320	PROVIDE SINGLE COMMERCIAL DATA OUTLET AT THIS LOCATION IN SAME FACE PLATE WITH NIPR OUTLETS
323	PROVIDE DATA OUTLET FOR WIRELESS ACCESS POINTS. MOUNT OUTLETS ON ROOF TRUSS.
324	18"W X 6"D BASKET TRAY WITH 6" DIVIDER AT 15'-0" AFF.
354	
355	PROVIDE (1) 2-1/2" EMT CONDUIT FROM COMMUNICATIONS RACK IN IG ROOM 130A TO AAR WORKSTATION IN ROOM 128. ROUTE CONDUIT UNDER RAISED FLOOR IN THE IG ROOM AND ROUTE CONDUIT OVERHEAD OUTSIDE OF IG ROOM. CABLES WILL BE INSTALLED BY SIMULATOR CONTRACTOR. INSTALL RECESSED PULL BOX AT AAR WORKSTATION AT 18" AFF TO CENTER. NOTE: BID OPTION 1, IF ACCEPTED, CHANGES THE LOCATION OF THESE CABLES.
356	PROVIDE (1) 2-1/2" EMT CONDUIT FROM COMMUNICATIONS RACK IN IG ROOM 130B TO AAR WORKSTATION IN ROOM 134. ROUTE CONDUIT UNDER RAISED FLOOR IN THE IG ROOM AND ROUTE CONDUIT OVERHEAD OUTSIDE OF IG ROOM TO AAR WORKSTATION. PROVIDE RECESSED PULL BOX AT AAR WORK STATION AT 18" AFF TO CENTER. CABLES WILL BE INSTALLED BY SIMULATOR CONTRACTOR.
358	PROVIDE RECESSED PULL BOX AT AAR WORKSTATION AT 18" AFF TO CENTER AND (1) 2-1/2" EMT CONDUIT TO IG ROOM 130A FOR AAR STATION.

KEY PLAN

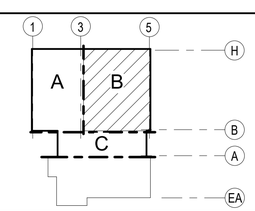

GRAPHIC SCALE

8 0 8 16

Scale: 1/8 INCH = 1 FOOT

PROJECT NORTH

PLAN NORTH

REGISTERED COMMUNICATIONS DISTRIBUTION DESIGNER
Bicsi
Stephen A Leffler
BICSI ID # 110560
EXPIRES 12-31-21
RCDD
6.24.2021

US Army Corps of Engineers ®

MARK	DESCRIPTION	DATE

ISSUE DATE: JUNE 2022
CONTRACT NO.: W912PP-22-R-0021

DESIGNED BY: S. LEFFLER
DRAWN BY: S. LEFFLER
CHECKED BY: R. RUBIO
SUBMITTED BY: E. OLMESS
SCALE: ANSI D
FILENAME: K469-951T-112

US ARMY CORPS OF ENGINEERS
ALBUQUERQUE
ALBUQUERQUE, NEW MEXICO

JACOBS
JACOBS ENGINEERING GROUP INC.
777 Main Street
Fort Worth, Texas 76102

COMBAT RESCUE HELICOPTER SIMULATOR FACILITY
KIRTLAND AIR FORCE BASE (AFB)
BERNALILLO COUNTY, NEW MEXICO

CRH SIMULATOR FACILITY ADAL
TELECOM FLOOR PLAN - LEVEL 1 - AREA B

SHEET ID
951B
T-112

READY TO ADVERTISE

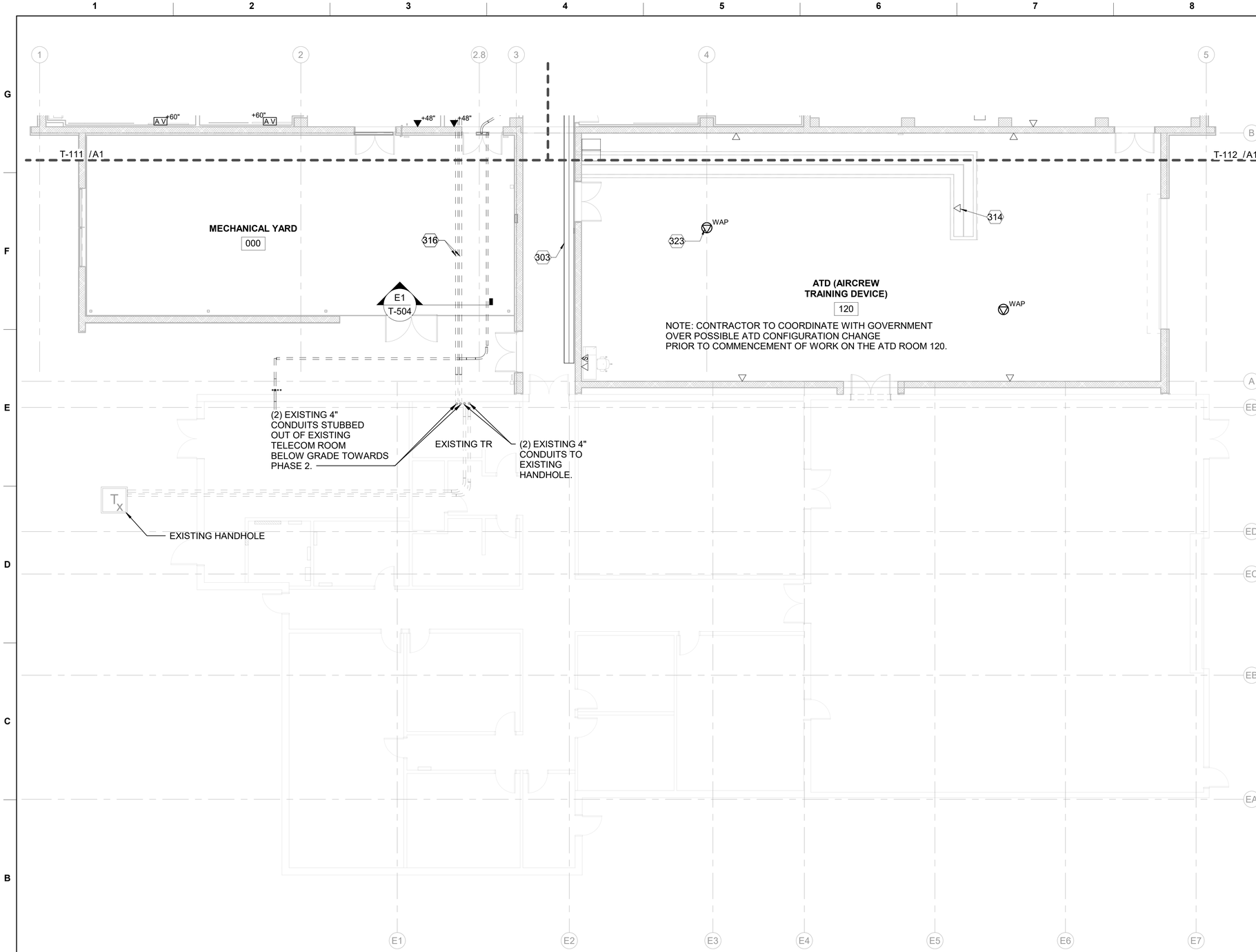

A1 PARTIAL FLOOR PLAN - LEVEL 1 - AREA C
1/8" = 1'-0"

TELECOMMUNICATIONS GENERAL NOTES

A. REFER TO SHEET T-001 FOR SYMBOLS AND GENERAL NOTES
B. SEE ES101 FOR TELECOM SITE PLANS.

SHEET KEYNOTES

303	18"W X 6"D BASKET TRAY WITH 6" DIVIDER AT 14'-6" AFF.
314	SURFACE MOUNT DATA OUTLETS ON SIDE OF TRENCH.
316	PROVIDE (2) 4" PDS PVC CONDUITS, CONCRETE ENCASED, STUBBED 6" AFF IN PHASE 2 TELECOM ROOM, AND RUN AT -5'-6" BELOW FINISHED GRADE. CONNECT TO TWO EXISTING 4" CONDUITS STUBBED OUT OF PHASE 1 TELECOM ROOM. MATCH CONDUIT DEPTH AT CONNECTION POINT. PROVIDE 3" 3-CELL FABRIC INNERDUCT IN ONE CONDUIT.
323	PROVIDE DATA OUTLET FOR WIRELESS ACCESS POINTS. MOUNT OUTLETS ON ROOF TRUSS.

KEY PLAN

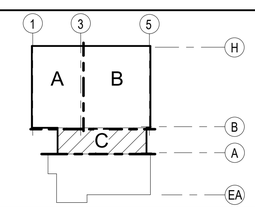

GRAPHIC SCALE

8 0 8 16
Scale: 1/8 INCH = 1 FOOT

PROJECT NORTH

PLAN NORTH

REGISTERED COMMUNICATIONS DISTRIBUTION DESIGNER
Bicsi
Stephen A Leffler
BICSI ID # 110560
EXPIRES 12-31-21
RCDD
6.24.2021

US Army Corps of Engineers ®

MARK	DESCRIPTION	DATE

DESIGNED BY: S. LEFFLER
DRAWN BY: S. LEFFLER
CHECKED BY: R. RUBIO
SUBMITTED BY: E. OLMESS
SIZE: ANSI D
ISSUE DATE: JUNE 2022
CONTRACT NO.: W912PP-22-R-0021
FILENAME: KAB9951-T-113

US ARMY CORPS OF ENGINEERS
ALBUQUERQUE
ALBUQUERQUE, NEW MEXICO

JACOBS
JACOBS ENGINEERING GROUP INC.
777 Main Street
Fort Worth, TX 76102

COMBAT RESCUE HELICOPTER SIMULATOR FACILITY
KIRTLAND AIR FORCE BASE (AFB)
BERNALILLO COUNTY, NEW MEXICO
CRH SIMULATOR FACILITY ADAL
TELECOM FLOOR PLAN - LEVEL 1 - AREA C

SHEET ID
951B
T-113

READY TO ADVERTISE

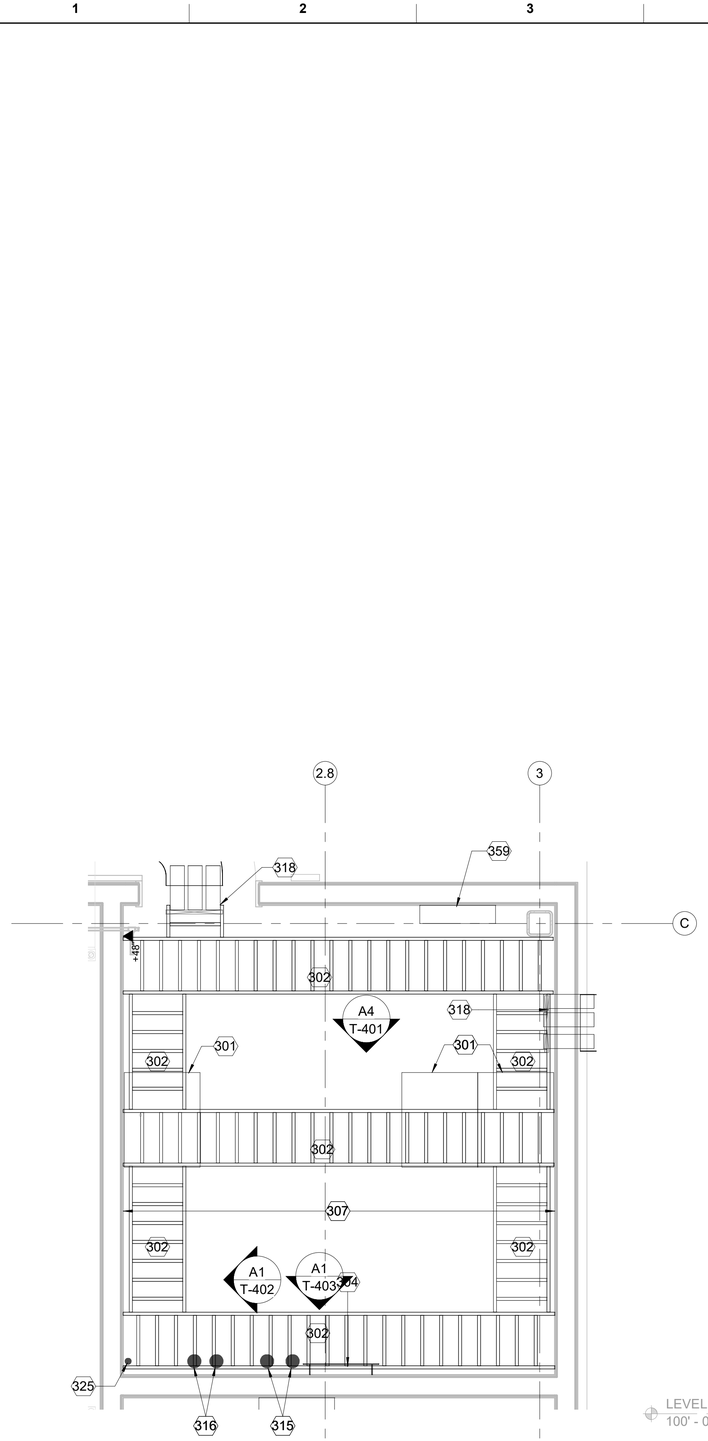

A1 ENLARGED PLAN - TR 126

1/2" = 1'-0"

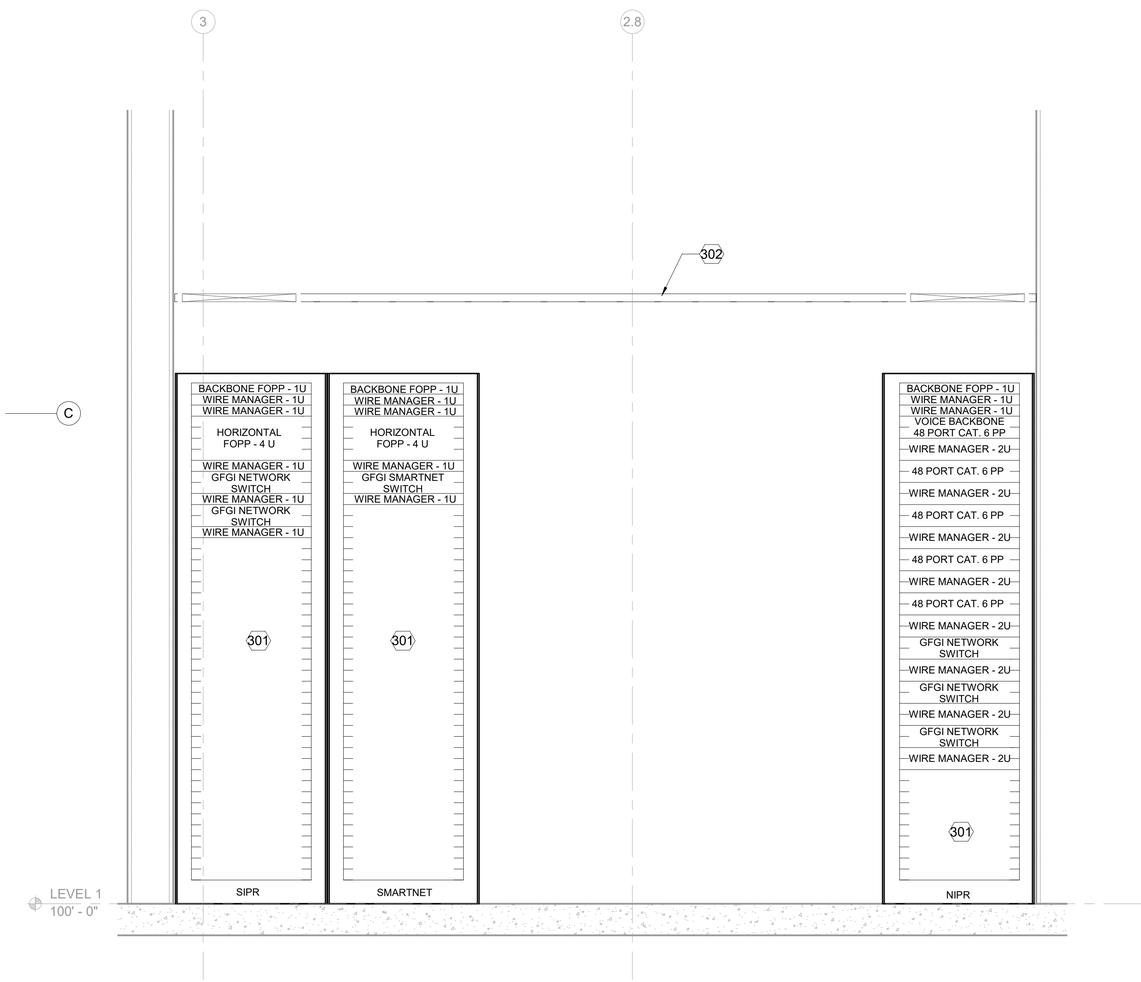

A4 TR 126 CABINET ELEVATIONS

1" = 1'-0"

TELECOMMUNICATIONS GENERAL NOTES

A. REFER TO SHEET T-001 FOR SYMBOLS AND GENERAL NOTES
B. SEE ES101 FOR TELECOM SITE PLANS.

SHEET KEYNOTES

301	PROVIDE 24"W X 30"D X 84"H DATA CABINET WITH FRONT AND REAR LOCKABLE PERFORATED DOORS, (2) 120VAC. 20A. PDU'S AND HORIZONTAL GROUND BAR AT REAR OF CABINET.
302	18"W LADDER RACK. MOUNT AT 8'-0" AFF.
304	PRIMARY BONDING BUSBAR AT 7'-0" AFF.
307	3/4" X 4' X 8' FIRE TREATED PLYWOOD. MOUNT PLYWOOD ON ALL 4 WALLS. MOUNT 12" AFF
315	(2) 4" PDS PVC CONDUITS, CONCRETE ENCASED, FROM PHASE 2 TELECOM ROOM STUBBED 6" AFF IN TR AND RUN AT -5'-6" BELOW FINISHED FLOOR. CONDUITS STUB 5'-0" OUTSIDE OF BUILDING FOR CONTINUATION TO FUTURE PHASE 3. CAP CONDUITS AND BURY WITH 18" OF SAND AND NATIVE FILL FOR NEXT PHASE.
316	PROVIDE (2) 4" PDS PVC CONDUITS, CONCRETE ENCASED, STUBBED 6" AFF IN PHASE 2 TELECOM ROOM, AND RUN AT -5'-6" BELOW FINISHED GRADE. CONNECT TO TWO EXISTING 4" CONDUITS STUBBED OUT OF PHASE 1 TELECOM ROOM. MATCH CONDUIT DEPTH AT CONNECTION POINT. PROVIDE 3" 3-CELL FABRIC INNERDUCT IN ONE CONDUIT.
318	PROVIDE 18" LADDER RACK, VERTICALLY MOUNTED UP TO SLEEVES ENTERING ROOM. USE VELCRO TIES TO SECURE CABLING TO LADDER RACK.
325	PROVIDE (1) 2" CONDUIT STUBBED AT 6" AFF AND RUN AT 5'-0" BELOW FINISHED GRADE FOR CATV FROM TELECOM ROOM TO CONTRACTOR PROVIDED CATV HANDHOLE. SEE SHEET ES101 FOR HANDHOLE LOCATION.
359	TELECOM ROOM ELECTRIC PANEL

GRAPHIC SCALES

SCALE: 1"=1'-0"

SCALE: 1/2"=1'-0"

PROJECT NORTH

PLAN NORTH

REGISTERED COMMUNICATIONS DISTRIBUTION DESIGNER
Bicsi
Stephen A Leffler
BICSI ID # 110560
EXPIRES 12-31-20
REV
6.24.2021

US Army Corps of Engineers ®

MARK	DESCRIPTION	DATE

ISSUE DATE: JUNE 2022
CONTRACT NO.: W912PP-22-R-0021

DESIGNED BY: S. LEFFLER
DRAWN BY: S. LEFFLER
CHECKED BY: R. RUBIO
SUBMITTED BY: E. OLIVESS
SIZE: ANSI D
FILENAME: K469-951-T-401

US ARMY CORPS OF ENGINEERS
ALBUQUERQUE
ALBUQUERQUE, NEW MEXICO

JACOBS
JACOBS ENGINEERING GROUP INC.
777 Main Street
Fort Worth, TX 76102

COMBAT RESCUE HELICOPTER SIMULATOR FACILITY
KIRTLAND AIR FORCE BASE (AFB),
BERNALILLO COUNTY, NEW MEXICO

CRH SIMULATOR FACILITY ADAL
ENLARGED PLANS

SHEET ID
951B
T-401

READY TO ADVERTISE

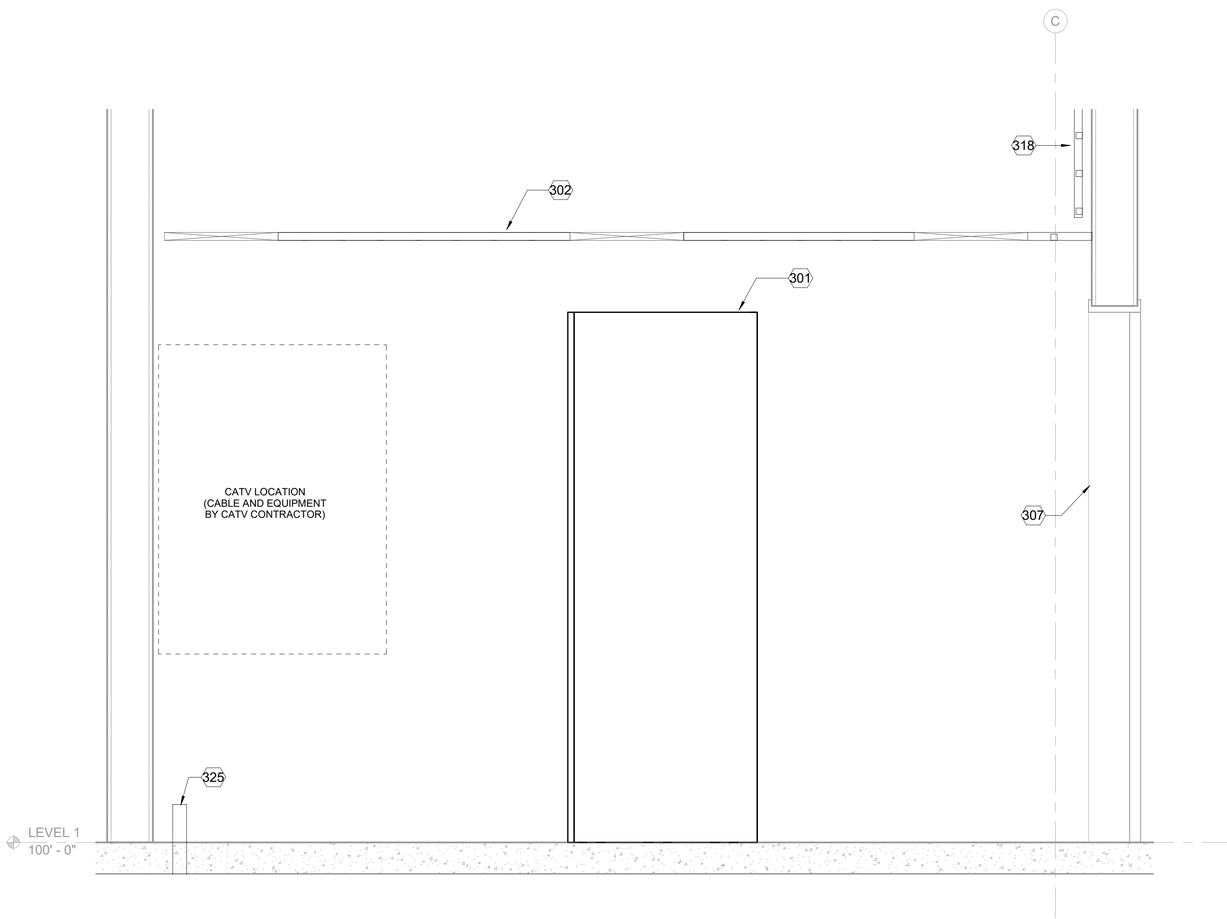

A1 TR 126 WEST WALL CATV LOCATION
1" = 1'-0"

TELECOMMUNICATIONS GENERAL NOTES

A. REFER TO SHEET T-001 FOR SYMBOLS AND GENERAL NOTES
B. SEE ES101 FOR TELECOM SITE PLANS.

SHEET KEYNOTES

301	PROVIDE 24"W X 30"D X 84"H DATA CABINET WITH FRONT AND REAR LOCKABLE PERFORATED DOORS, (2) 120VAC. 20A. PDU'S AND HORIZONTAL GROUND BAR AT REAR OF CABINET.
302	18"W LADDER RACK. MOUNT AT 8'-0" AFF.
307	3/4" X 4' X 8' FIRE TREATED PLYWOOD. MOUNT PLYWOOD ON ALL 4 WALLS. MOUNT 12" AFF
318	PROVIDE 18" LADDER RACK, VERTICALLY MOUNTED UP TO SLEEVES ENTERING ROOM. USE VELCRO TIES TO SECURE CABLING TO LADDER RACK.
325	PROVIDE (1) 2" CONDUIT STUBBED AT 6" AFF AND RUN AT 5'-0" BELOW FINISHED GRADE FOR CATV FROM TELECOM ROOM TO CONTRACTOR PROVIDED CATV HANDHOLE. SEE SHEET ES101 FOR HANDHOLE LOCATION.

GRAPHIC SCALE

1 1/2 0 1 2
SCALE: 1"=1'-0"

REGISTERED COMMUNICATIONS DISTRIBUTION DESIGNER
Bicsi
Stephen A Leffler
BICSI ID # 110560
EXPIRES 12-31-21
RCDD
6.24.2021

US Army Corps of Engineers ®

MARK	DESCRIPTION	DATE

DESIGNED BY: S. LEFFLER
DRAWN BY: S. LEFFLER
CHECKED BY: R. RUBIO
SUBMITTED BY: E. OLMESS
SIZE: ANSI D
ISSUE DATE: JUNE 2022
CONTRACT NO.: W912PP-22-R-0021
FILENAME: K486-951-T-402

US ARMY CORPS OF ENGINEERS
ALBUQUERQUE
ALBUQUERQUE, NEW MEXICO

JACOBS
JACOBS ENGINEERING GROUP INC.
777 Main Street
Fort Worth, TX 76102

COMBAT RESCUE HELICOPTER SIMULATOR FACILITY
KIRTLAND AIR FORCE BASE (AFB)
BERNALILLO COUNTY, NEW MEXICO

CRH SIMULATOR FACILITY ADAL
ENLARGED PLANS

SHEET ID
951B
T-402

READY TO ADVERTISE

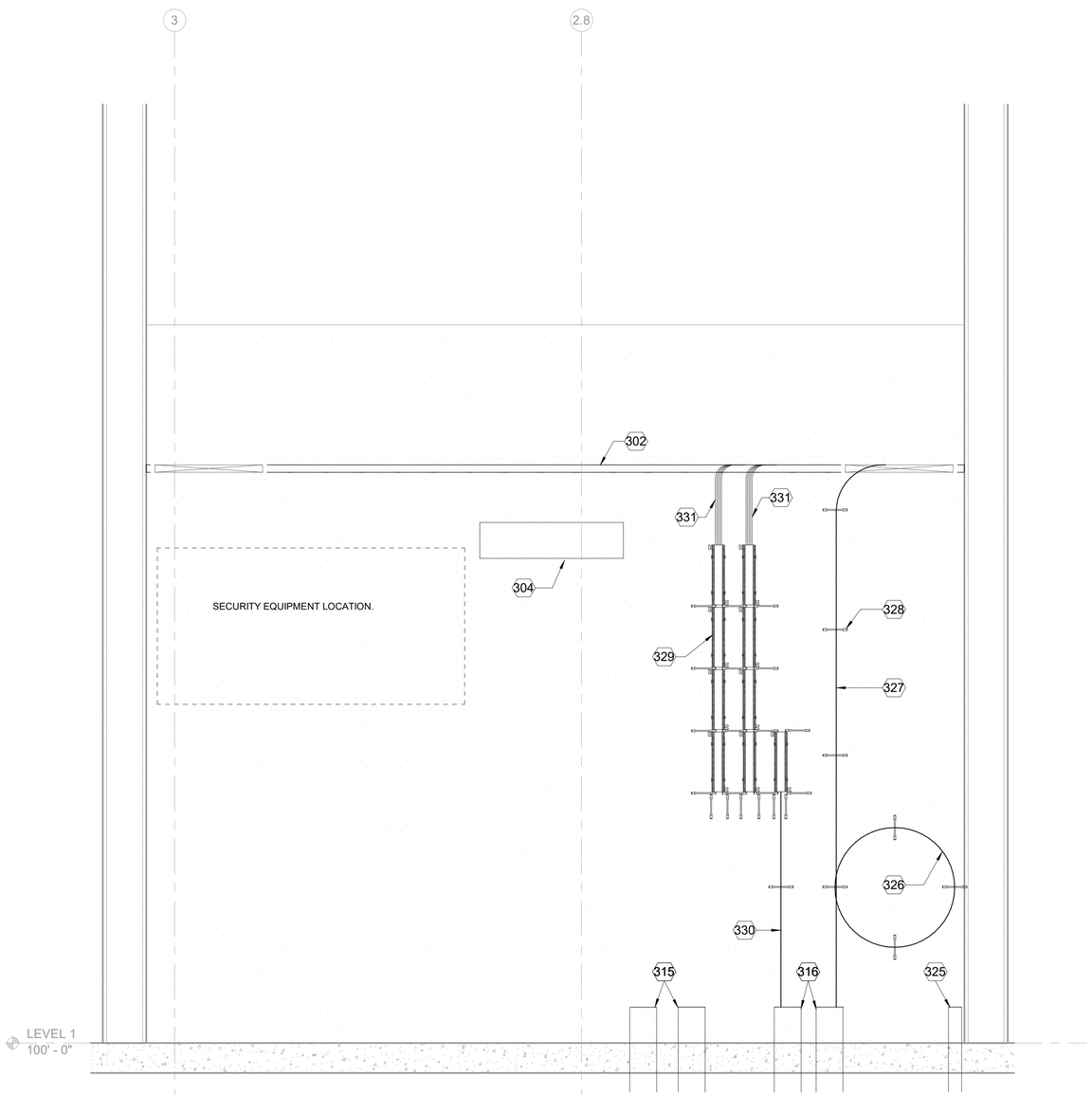

A1 TR 126 - SOUTH WALL

1" = 1'-0"

SHEET KEYNOTES

302	18"W LADDER RACK. MOUNT AT 8'-0" AFF.
304	PRIMARY BONDING BUSBAR AT 7'-0" AFF.
315	(2) 4" PDS PVC CONDUITS, CONCRETE ENCASED, FROM PHASE 2 TELECOM ROOM STUBBED 6" AFF IN TR AND RUN AT -5'-6" BELOW FINISHED FLOOR. CONDUITS STUB 5'-0" OUTSIDE OF BUILDING FOR CONTINUATION TO FUTURE PHASE 3. CAP CONDUITS AND BURY WITH 18" OF SAND AND NATIVE FILL FOR NEXT PHASE.
316	PROVIDE (2) 4" PDS PVC CONDUITS, CONCRETE ENCASED, STUBBED 6" AFF IN PHASE 2 TELECOM ROOM, AND RUN AT -5'-6" BELOW FINISHED GRADE. CONNECT TO TWO EXISTING 4" CONDUITS STUBBED OUT OF PHASE 1 TELECOM ROOM. MATCH CONDUIT DEPTH AT CONNECTION POINT. PROVIDE 3" 3-CELL FABRIC INNERDUCT IN ONE CONDUIT.
325	PROVIDE (1) 2" CONDUIT STUBBED AT 6" AFF AND RUN AT 5'-0" BELOW FINISHED GRADE FOR CATV FROM TELECOM ROOM TO CONTRACTOR PROVIDED CATV HANDHOLE. SEE SHEET ES101 FOR HANDHOLE LOCATION.
326	PROVIDE 20' FIBER SLACK LOOP
327	(3) 12 STRAND SINGLEMODE FIBER OPTIC CABLES FROM PHASE 1. NIPR, SIPR AND SMARTNET.
328	D-RING (TYP).
329	66M150 BLOCK - PROVIDE 1 CAT. 6 CABLE PER VOICE PATCH PANEL PORT IN IN NIPR CABINET FOR A TOTAL OF 48 CABLES.
330	50 PAIR OSP CABLE FROM PHASE 1.
331	PROVIDE ONE CAT. 6 CABLE PER VOICE PATCH PANEL PORT.

GRAPHIC SCALE

1 1/2 0 1 2

SCALE: 1"=1'-0"

REGISTERED COMMUNICATIONS DISTRIBUTION DESIGNER
Bicsi
Stephen A Leffler
BICSI ID # 110560
EXPIRES 12-31-20
REV
6.24.2021

US Army Corps of Engineers ®

MARK	DESCRIPTION	DATE

ISSUE DATE: JUNE 2022
CONTRACT NO.: W912PP-22-R-0021

DESIGNED BY: S. LEFFLER
DRAWN BY: S. LEFFLER
CHECKED BY: C. MEADE
SUBMITTED BY: E. OLNESS
SIZE: ANSI D
FILENAME: K469-951-T-403

US ARMY CORPS OF ENGINEERS
ALBUQUERQUE
ALBUQUERQUE, NEW MEXICO

JACOBS
JACOBS ENGINEERING GROUP INC.
777 Main Street
Fort Worth, TX 76102

COMBAT RESCUE HELICOPTER SIMULATOR FACILITY
KIRTLAND AIR FORCE BASE (AFB),
BERNALILLO COUNTY, NEW MEXICO

CRH SIMULATOR FACILITY ADAL
ENLARGED PLANS

SHEET ID
951B
T-403

READY TO ADVERTISE

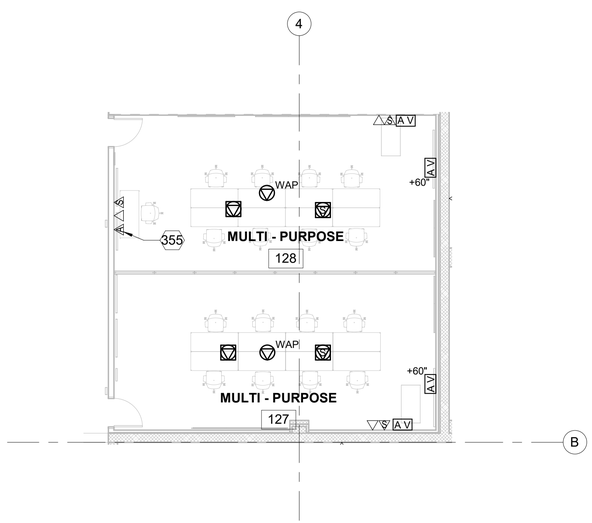

A1 ENLARGED PLAN - BID OPTION 6
1/8" = 1'-0"

TELECOMMUNICATIONS GENERAL NOTES

A. REFER TO SHEET T-001 FOR SYMBOLS AND GENERAL NOTES
B. SEE ES101 FOR TELECOM SITE PLANS.

SHEET KEYNOTES

355	PROVIDE (1) 2-1/2" EMT CONDUIT FROM COMMUNICATIONS RACK IN IG ROOM 130A TO AAR WORKSTATION IN ROOM 128. ROUTE CONDUIT UNDER RAISED FLOOR IN THE IG ROOM AND ROUTE CONDUIT OVERHEAD OUTSIDE OF IG ROOM. CABLES WILL BE INSTALLED BY SIMULATOR CONTRACTOR. INSTALL RECESSED PULL BOX AT AAR WORKSTATION AT 18" AFF TO CENTER. NOTE: BID OPTION 1, IF ACCEPTED, CHANGES THE LOCATION OF THESE CABLES.

GRAPHIC SCALE

8 0 8 16
Scale: 1/8 INCH = 1 FOOT

PROJECT NORTH

PLAN NORTH

REGISTERED COMMUNICATIONS DISTRIBUTION DESIGNER
Bicsi
Stephen A Leffler
BICSI ID # 110560
EXPIRES 12-31-21
RCDD
6.24.2021

US Army Corps of Engineers ®

MARK	DESCRIPTION	DATE

DESIGNED BY: S. LEFFLER
DRAWN BY: S. LEFFLER
CHECKED BY: R. RUBIO
SUBMITTED BY: E. OLMESS
SIZE: ANSI D
ISSUE DATE: JUNE 2022
CONTRACT NO.: W912PP-22-R-0021
FILENAME: K486-951-T-404

US ARMY CORPS OF ENGINEERS
ALBUQUERQUE
ALBUQUERQUE, NEW MEXICO

JACOBS
JACOBS ENGINEERING GROUP INC.
777 Main Street
Fort Worth, TX 76102

COMBAT RESCUE HELICOPTER SIMULATOR FACILITY
KIRTLAND AIR FORCE BASE (AFB)
BERNALILLO COUNTY, NEW MEXICO
CRH SIMULATOR FACILITY ADAL
BID OPTION 6 - TELECOM - ENLARGED PLAN

SHEET ID
951B
T-404

READY TO ADVERTISE

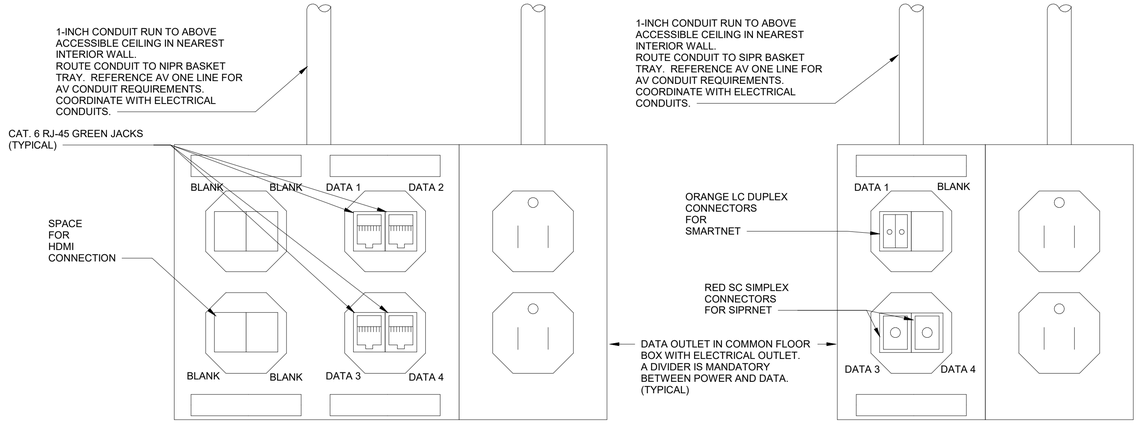

ANALOG VOICE/NIPR DATA FLOOR BOX OUTLET - 2 PORT

SECURE DATA FLOOR BOX OUTLET - 2 PORT

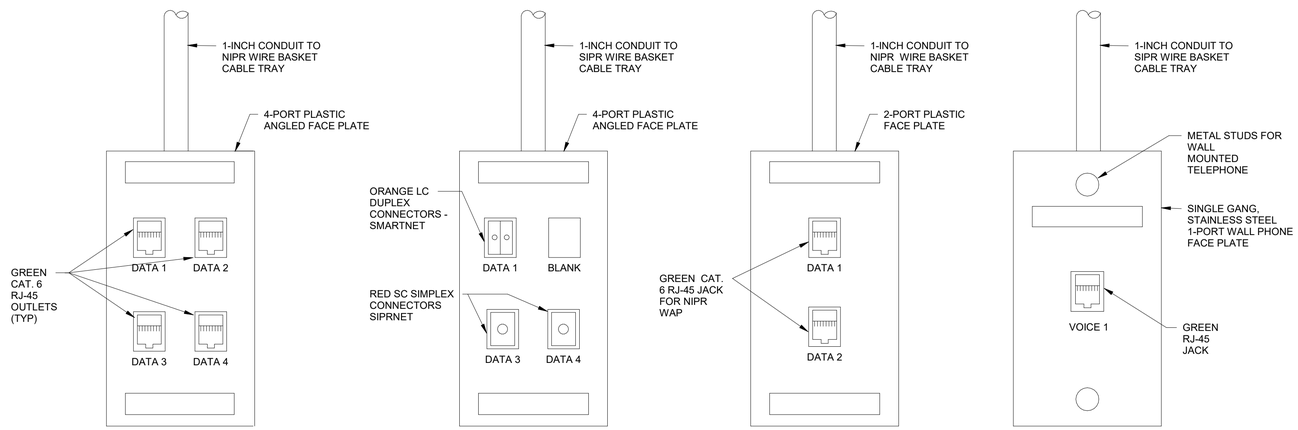

ANANLOG VOICE/NIPR DATA OUTLET

SIPR / SMARTNET DATA OUTLET

WIRELESS ACCESS POINT (WAP) OUTLET

WAP

ANALOG WALL PHONE OUTLET

W

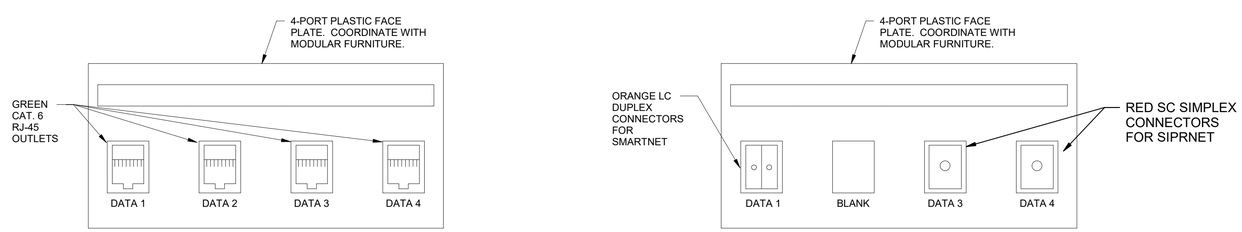

MODULAR FURNITURE ANALOG VOICE/ NIPRNET

M

MODULAR FURNITURE SECURE DATA

M

A1 DATA OUTLET DETAILS

NTS

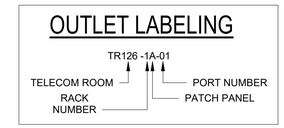

F8 TYPICAL OUTLET LABELING

NTS

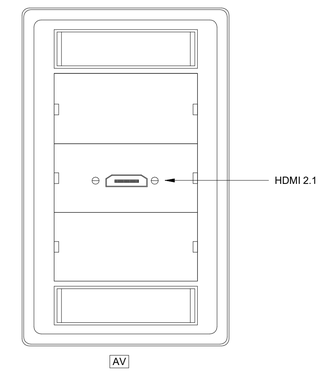

D8 AUDIO/VISUAL FACE PLATE DETAIL

NTS

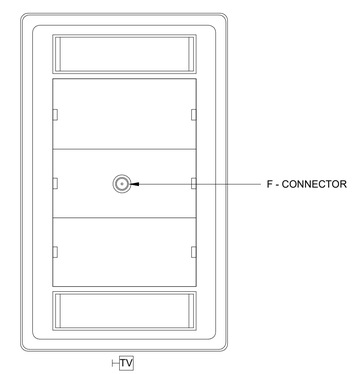

B8 CATV FACE PLATE DETAIL

NTS

REGISTERED COMMUNICATIONS DISTRIBUTION DESIGNER
Bicsi
Stephen A Leffler
BICSI ID # 110560
EXPIRES 12-31-22
RCDD
6.24.2021

US Army Corps of Engineers ®

MARK	DESCRIPTION	DATE

ISSUE DATE: JUNE 2022
CONTRACT NO.: W912PP-22-R-0021

DESIGNED BY: S. LEFFLER
DRAWN BY: S. LEFFLER
CHECKED BY: R. RUBIO
SUBMITTED BY: E. OLNESS
SIZE: ANSI D
FILENAME: K469-951-T-501

US ARMY CORPS OF ENGINEERS
ALBUQUERQUE
ALBUQUERQUE, NEW MEXICO

JACOBS
JACOBS ENGINEERING GROUP INC.
777 Main Street
Fort Worth, TX 76102

COMBAT RESCUE HELICOPTER SIMULATOR FACILITY
KIRTLAND AIR FORCE BASE (AFB),
BERNALILLO COUNTY, NEW MEXICO

CRH SIMULATOR FACILITY ADAL
DETAILS

SHEET ID
951B
T-501

READY TO ADVERTISE

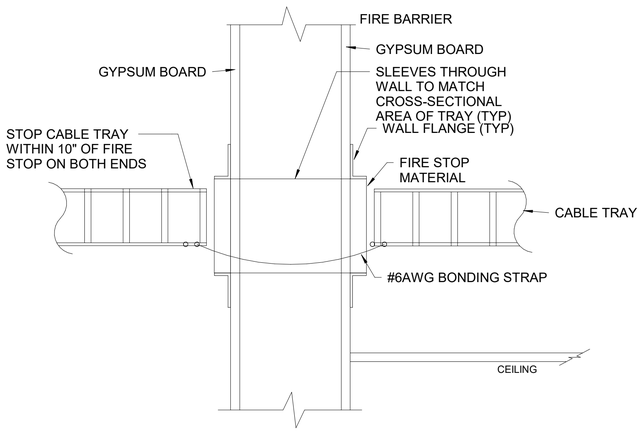

TYPICAL WHERE CABLE TRAY PENETRATES FIRE-RATED PARTITION ABOVE CEILING. BASIS OF DESIGN: EZ PATH 44+ SERIES.

D1 BASKET TRAY FIRE RATED WALL PENETRATION DETAIL

NTS

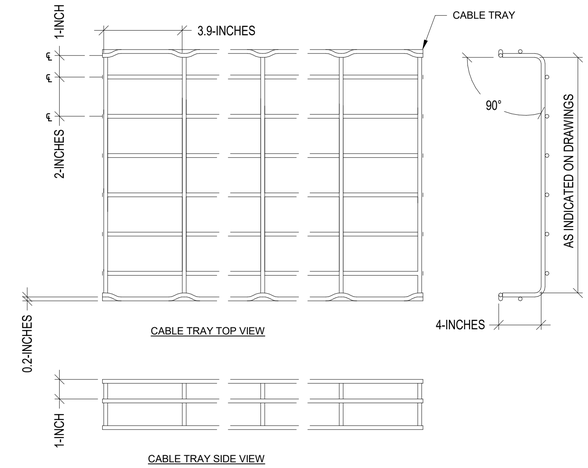

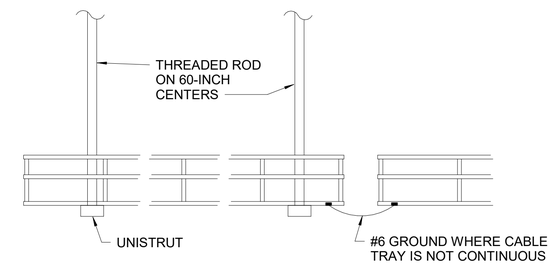

MOUNTING AND BONDING DETAIL

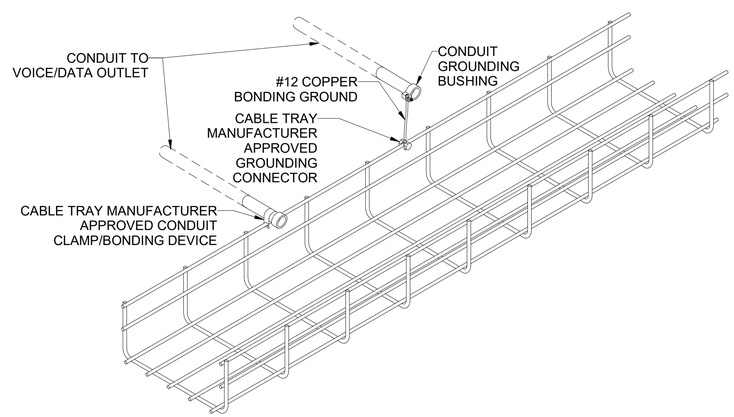

INSTALL WATERFALLS WHERE CABLES LEAVE THE TRAY IN ORDER TO PROVIDE PROPER BEND RADIUS.

A1 BASKET TYPE - CONDUIT BONDING

NTS

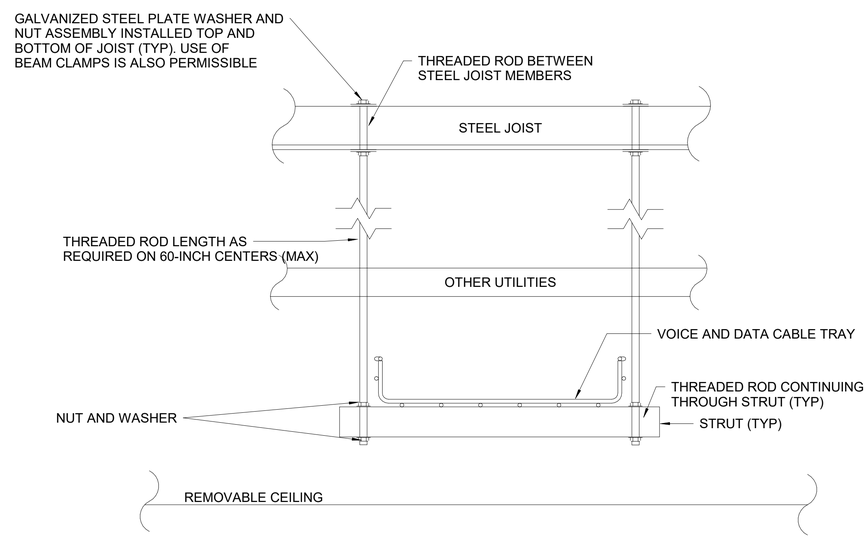

ABOVE CEILING MOUNTED CABLE TRAY

A6 TYPICAL BASKET TRAY DETAILS

NTS

REGISTERED COMMUNICATIONS DISTRIBUTION DESIGNER
Bicsi
Stephen A Leffler
BICSI ID # 110560
EXPIRES 12-31-21
RCDD
6.24.2021

US Army Corps of Engineers ®

MARK	DESCRIPTION	DATE

DESIGNED BY: S. LEFFLER
DRAWN BY: S. LEFFLER
CHECKED BY: R. RUBIO
SUBMITTED BY: E. OLMESS
SIZE: ANSI D
ISSUE DATE: JUNE 2022
CONTRACT NO.: W912PP-22-R-0021
FILENAME: K486-951-1-502

US ARMY CORPS OF ENGINEERS
ALBUQUERQUE
ALBUQUERQUE, NEW MEXICO

JACOBS
JACOBS ENGINEERING GROUP INC.
777 Main Street
FORT WORTH, TX 76102

COMBAT RESCUE HELICOPTER SIMULATOR FACILITY
KIRTLAND AIR FORCE BASE (AFB),
BERNALILLO COUNTY, NEW MEXICO

CRH SIMULATOR FACILITY ADAL
DETAILS

SHEET ID
951B
T-502

READY TO ADVERTISE

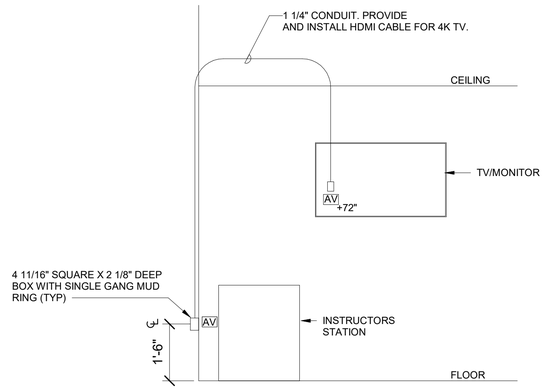

MISSION PLANNING AND MULTIPURPOSE ROOM AV DIAGRAM

E1

NTS

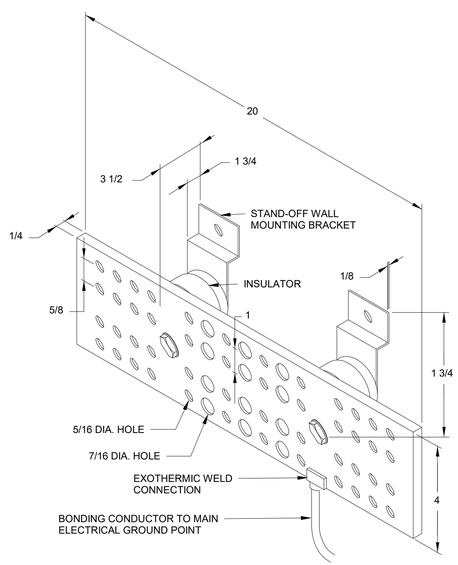

TELECOMMUNICATION PRIMARY BONDING BUSBAR (PBB) DETAIL

A1

NTS

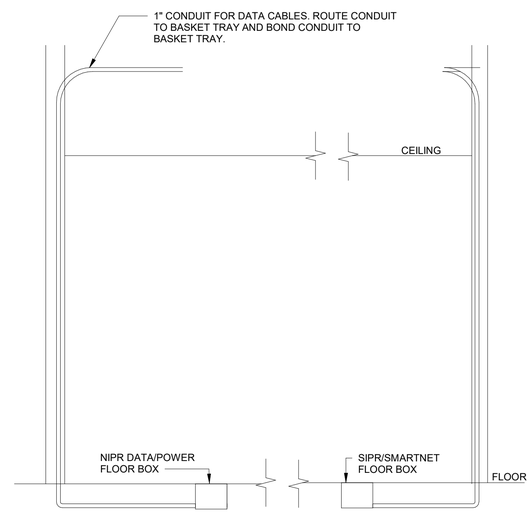

NOTE: NIPR AND SIPR/SMARTNET MAY NOT BE CONBINED IN THE SAME FLOOR BOX UNLESS THERE IS A MINIMUM OF 2" SEPARATION BETWEEN NIPR AND SIPR/SPARTNET.. NIPR AND SIPR/SMARTNET SHALL NOT BE COMBINED IN THE SAME CONDUIT.

MISSION PLANNING / MULTIPURPOSE ROOM FLOOR BOX DETAIL

A6

NTS

REGISTERED COMMUNICATIONS DISTRIBUTION DESIGNER
Bicsi
Stephen A Leffler
BICSI ID # 110560
EXPIRES 12-31-21
RCDD
6.24.2021

US Army Corps of Engineers ®

MARK	DESCRIPTION	DATE

DESIGNED BY: S. LEFFLER
DRAWN BY: S. LEFFLER
CHECKED BY: R. RUBIO
SUBMITTED BY: E. OLMESS
SIZE: ANSI D
ISSUE DATE: JUNE 2022
CONTRACT NO.: W912PP-22-R-0021
FILENAME: K4A9-951-T-503

US ARMY CORPS OF ENGINEERS
ALBUQUERQUE
ALBUQUERQUE, NEW MEXICO

JACOBS
JACOBS ENGINEERING GROUP INC.
777 Main Street
Fort Worth, TX 76102

COMBAT RESCUE HELICOPTER SIMULATOR FACILITY
KIRTLAND AIR FORCE BASE (AFB)
BERNALILLO COUNTY, NEW MEXICO

CRH SIMULATOR FACILITY ADAL
DETAILS

SHEET ID
951B
T-503

READY TO ADVERTISE

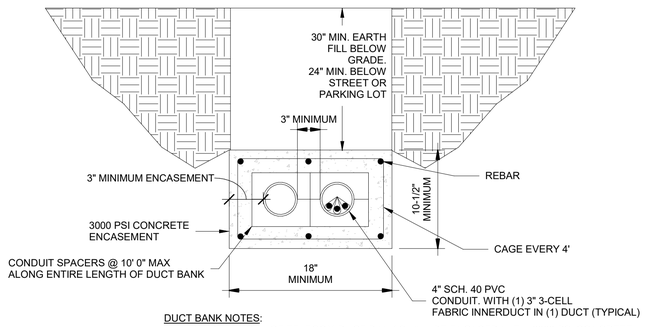

DUCT BANK NOTES:

A. ENTIRE LENGTH OF TELECOM DUCT BANK SHALL BE ENCASED WITH 3000 PSI CONCRETE.

B. CONTINUOUS 6" WIDE DETECTABLE WARNING TAPE SHALL BE INSTALLED ABOVE THE TOP OF THE DUCT BANK AT 12" BELOW GRADE. DUCT BANKS UP TO 24" WIDE SHALL HAVE ONE (1) MARKER TAPE ABOVE THE ENTIRE CENTER LENGTH. DUCT BANKS GREATER THAN 24" WIDE SHALL HAVE TWO (2) OR MORE MARKER TAPES AT 24" APART ABOVE THE ENTIRE CENTER LENGTH.

C. DEPTH AS SHOWN UNLESS OTHERWISE NOTED ON THE DRAWINGS

E1 PDS 2 X 1-WAY 4" TELECOM DUCT BANK

NTS

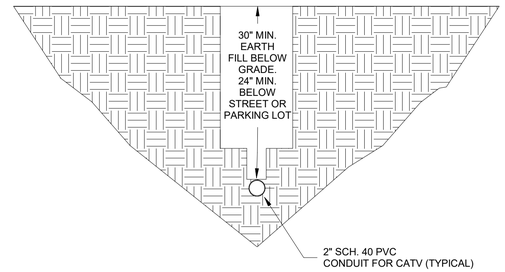

DUCT BANK NOTES:

A. CONTINUOUS 6" WIDE DETECTABLE WARNING TAPE SHALL BE INSTALLED ABOVE THE TOP OF THE DUCT BANK AT 12" BELOW GRADE. DUCT BANKS UP TO 24" WIDE SHALL HAVE ONE (1) MARKER TAPE ABOVE THE ENTIRE CENTER LENGTH. DUCT BANKS GREATER THAN 24" WIDE SHALL HAVE TWO (2) OR MORE MARKER TAPES AT 24" APART ABOVE THE ENTIRE CENTER LENGTH.

B. DEPTH AS SHOWN UNLESS OTHERWISE NOTED ON THE DRAWINGS

E4 1 X 1-WAY 2" CATV DUCT BANK

NTS

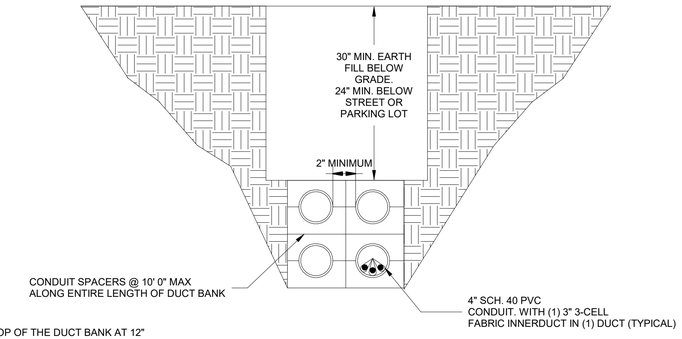

DUCT BANK NOTES:

A. CONTINUOUS 6" WIDE DETECTABLE WARNING TAPE SHALL BE INSTALLED ABOVE THE TOP OF THE DUCT BANK AT 12" BELOW GRADE. DUCT BANKS UP TO 24" WIDE SHALL HAVE ONE (1) MARKER TAPE ABOVE THE ENTIRE CENTER LENGTH. DUCT BANKS GREATER THAN 24" WIDE SHALL HAVE TWO (2) OR MORE MARKER TAPES AT 24" APART ABOVE THE ENTIRE CENTER LENGTH.

B. DEPTH AS SHOWN UNLESS OTHERWISE NOTED ON THE DRAWINGS

E7 2 X 2-WAY 4" TELECOM DUCT BANK

NTS

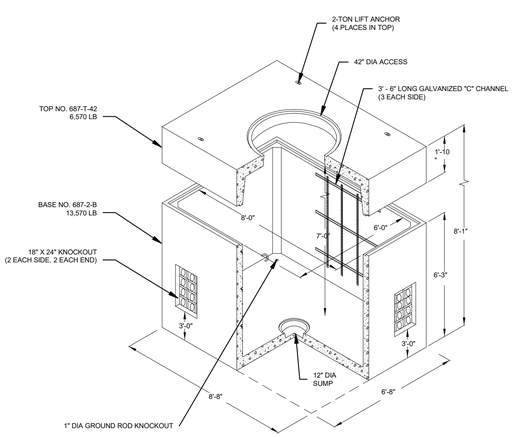

A1 TELECOMMUNICATIONS MAINTENANCE HOLE (PRECAST CONCRETE)

NTS

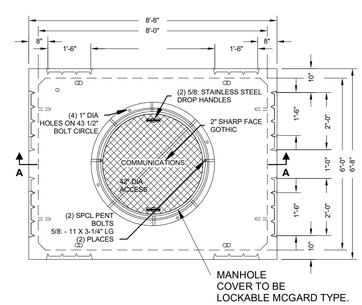

A4 MAINTENANCE HOLE PLAN VIEW

NTS

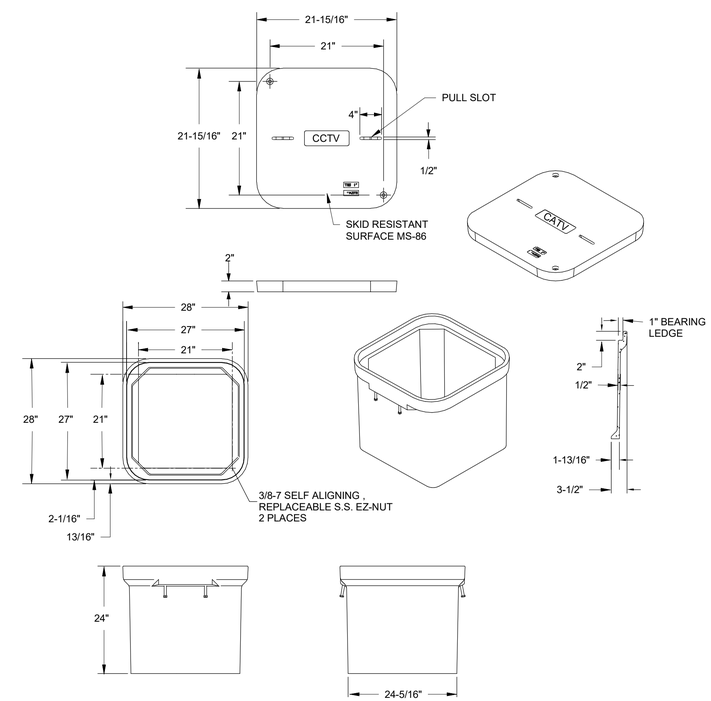

A7 TELECOM HAND HOLE

3" = 1'-0"

REGISTERED COMMUNICATIONS DISTRIBUTION DESIGNER
Bicsi
Stephen A Leffler
BICSI ID # 110560
EXPIRES 12-31-21
RCDD
6.24.2021

US Army Corps of Engineers ®

MARK	DESCRIPTION	DATE

ISSUE DATE: JUNE 2022
CONTRACT NO.: W912PP-22-R-0021

DESIGNED BY: S. LEFFLER
DRAWN BY: S. LEFFLER
CHECKED BY: R. RUBIO
SUBMITTED BY: E. OLNESS
SIZE: ANSI D
FILENAME: KA969-951-T-504

US ARMY CORPS OF ENGINEERS
ALBUQUERQUE
ALBUQUERQUE, NEW MEXICO

JACOBS
JACOBS ENGINEERING GROUP INC.
777 Main Street
Fort Worth, TX 76102

COMBAT RESCUE HELICOPTER SIMULATOR FACILITY
KIRTLAND AIR FORCE BASE (AFB),
BERNALILLO COUNTY, NEW MEXICO

CRH SIMULATOR FACILITY ADAL
DETAILS

SHEET ID
951B
T-504

READY TO ADVERTISE

CONDUIT FILL	
CONDUIT SIZE	MAXIMUM QUANTITY OF CABLES
1/2"	NOT USED
3/4"	NOT USED
1"	7
1 1/4"	13
1 1/2"	18
2"	29
2 1/2"	50
3"	76
3 1/2"	100
4"	127

NOTE: CABLE QUANTITIES ARE BASED ON AN OVERALL CABLE DIAMETER OF APPROXIMATELY .224" WITH ONE 90 DEGREE CONDUIT BEND."

C1 TELECOM CONDUIT FILL

NTS

BASKET TRAY FILL SCHEDULE				
BASKET TRAY SIZE	MAXIMUM CABLE QUANTITY AT 50%	APPROXIMATE MAXIMUM CABLE WEIGHT LBS/FT	CABLE TRAY SAFE LOAD CAPACITY LBS/FT**	NEMA CLASS
8"W X 6"D X 10'L	609	15.834	111	VE-2
12"W X 6"D X 10'L	913	23.738	124	VE-2
18"W X 6"D X 10'L	1370	35.62	128	VE-2
24"W X 6"D X 10'L	1827	47.502	154	VE-2

NOTE: CABLE QUANTITY IS BASED ON AN APPROXIMATE CABLE DIAMETER OF .224" AND A MAXIMUM CABLE TRAY FILL OF 50% (BASED ON NEC 392-9B).
CABLE WEIGHT IS BASED ON .026 POUNDS PER FOOT. UFC 3-580-01 REQUIRES MAXIMUM 25% FILL AT INSTALLATION.
** CABLE TRAY LOAD CAPACITY IS BASED ON COOPER B-LINE, FLEXTRAY WIRE BASKET TYPE SYSTEM WITH 5' SUPPORT SPAN.

A1 BASKET TRAY FILL SCHEDULE

NTS

REGISTERED COMMUNICATIONS DISTRIBUTION DESIGNER
Bicsi
Stephen A Leffler
BICSI ID # 110560
EXPIRES 12-31-23
6.24.2021

US Army Corps of Engineers ®

MARK	DESCRIPTION	DATE

ISSUE DATE: JUNE 2022
CONTRACT NO.: W912PP-22-R-0021
DESIGNED BY: S. LEFFLER
DRAWN BY: S. LEFFLER
CHECKED BY: R. RUBIO
SUBMITTED BY: E. OLNESS
SIZE: ANSI D
FILENAME: KA69-951-T-504

US ARMY CORPS OF ENGINEERS
ALBUQUERQUE
ALBUQUERQUE, NEW MEXICO

JACOBS
JACOBS ENGINEERING GROUP INC.
777 Main Street
Fort Worth, Texas 76102

COMBAT RESCUE HELICOPTER SIMULATOR FACILITY
KIRTLAND AIR FORCE BASE (AFB),
BERNALILLO COUNTY, NEW MEXICO

CRH SIMULATOR FACILITY ADAL
DETAILS

SHEET ID
951B
T-505

READY TO ADVERTISE

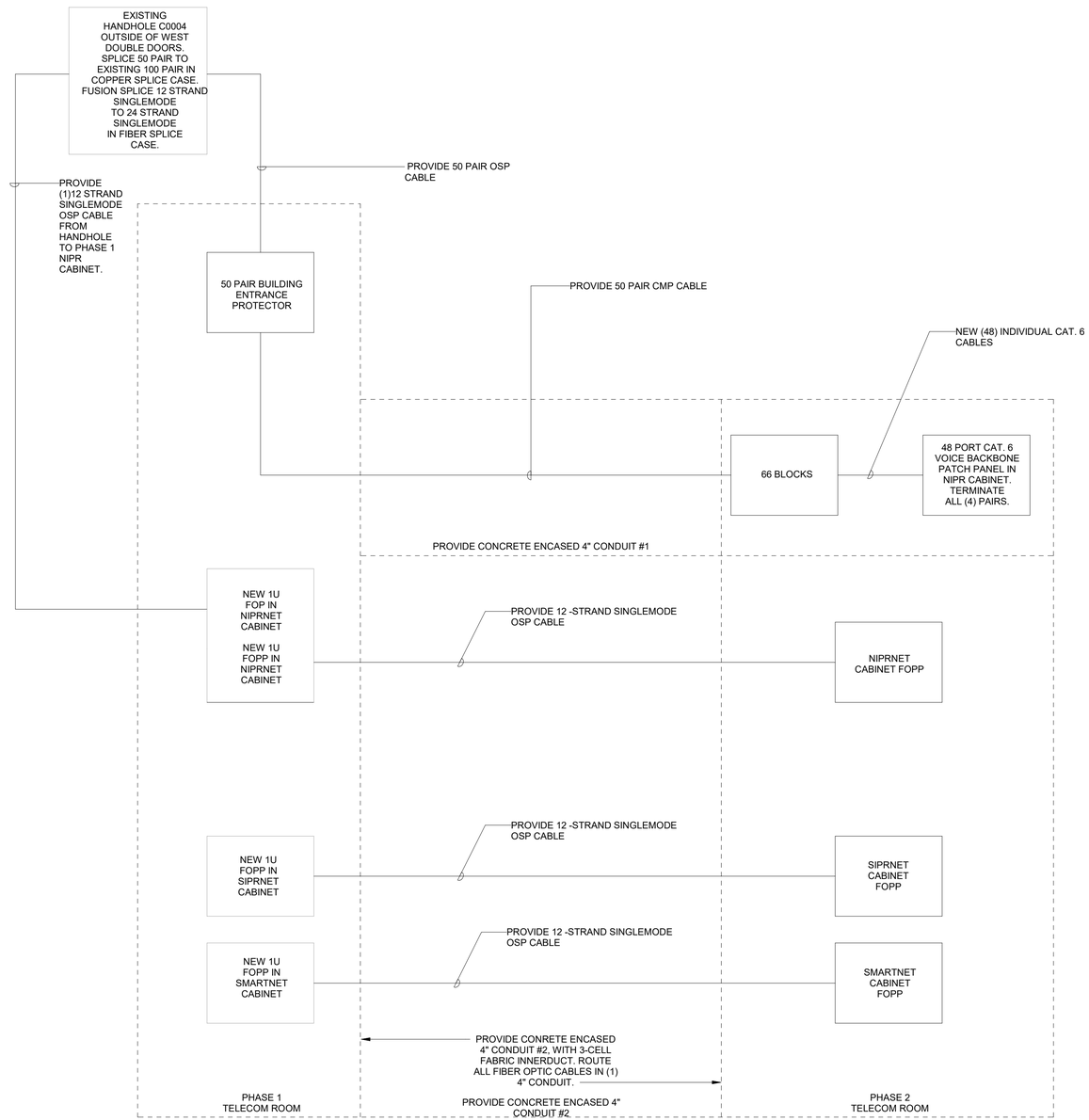

NOTE: CONTRACTOR TO PROVIDE AND INSTALL HARDWARE, (2) 3-CELL FABRIC INNERDUCTS IN ONE CONDUIT AND OSP CABLES IN PHASE 1 AND 2; INCLUDING PATCH PANELS, CONNECTORS, TERMINATIONS AND TESTING OF FIBER OPTIC AND COPPER CABLES BETWEEN PHASE 1 AND 2.

A2 TELECOM BACKBONE ONE-LINE DIAGRAMS

NTS

REGISTERED COMMUNICATIONS DISTRIBUTION DESIGNER
Bicsi
Stephen A Leffler
BICSI ID # 110560
EXPIRES 12-31-21
RCDD
6.24.2021

US Army Corps of Engineers ®

MARK	DESCRIPTION	DATE

DESIGNED BY: S. LEFFLER
DRAWN BY: S. LEFFLER
CHECKED BY: R. RUBIO
SUBMITTED BY: E. OLMESS
SIZE: ANSI D
ISSUE DATE: JUNE 2022
CONTRACT NO.: W912PP-22-R-0021
FILENAME: K4089-951-T-602

US ARMY CORPS OF ENGINEERS
ALBUQUERQUE
ALBUQUERQUE, NEW MEXICO

JACOBS
JACOBS ENGINEERING GROUP INC.
777 Main Street
Fort Worth, TX 76102

COMBAT RESCUE HELICOPTER SIMULATOR FACILITY
KIRTLAND AIR FORCE BASE (AFB)
BERNALILLO COUNTY, NEW MEXICO

CRH SIMULATOR FACILITY ADAL
ONE-LINE DIAGRAMS

SHEET ID
951B
T-601

READY TO ADVERTISE

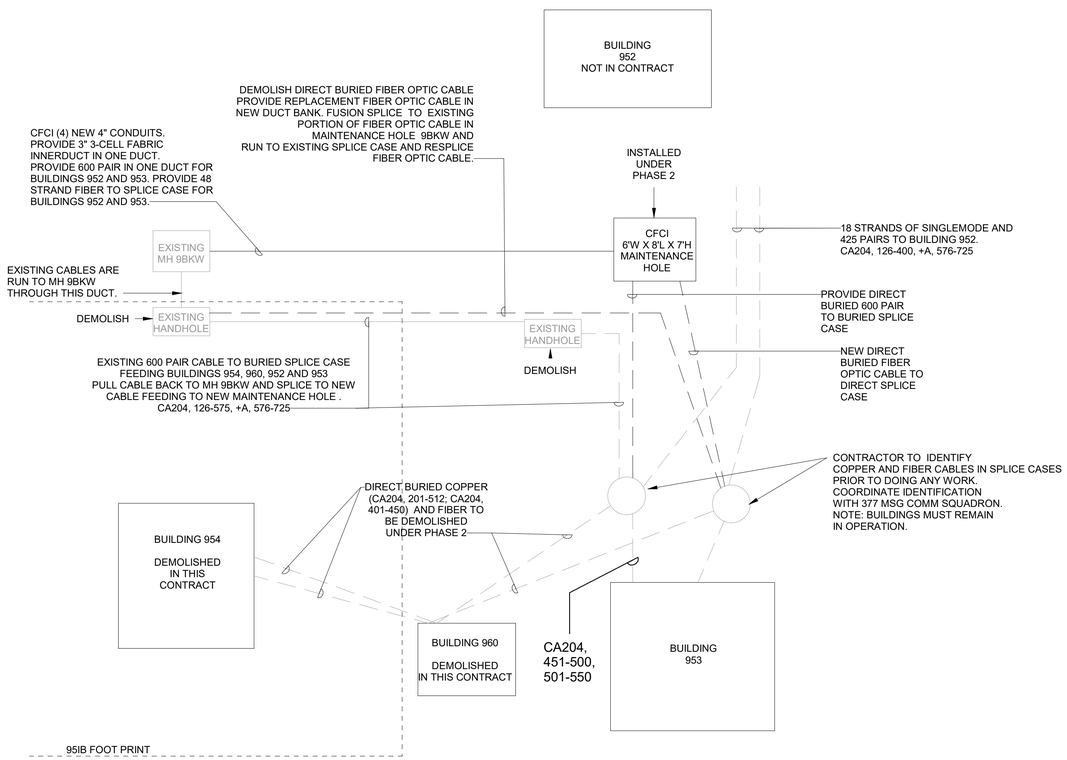

NOTE: NEW INSTALLATION MUST TAKE PLACE PRIOR TO DEMOLITION WORK. ALL WORK MUST BE COORDINATED AND VERIFIED WITH 377 MSG/SC AND CONTRACTING OFFICER PRIOR TO START OF WORK. BUILDINGS 952 AND 953 MUST REMAIN OPERATIONAL DURING NORMAL WORKING HOURS.

CABLES FEEDING BUILDINGS 952 AND 953 WILL REQUIRE REROUTING TO NEW DUCT BANK AND MAINTENANCE HOLE DUE TO THE CONSTRUCTION OF BUILDING 951B

SEE SHEET ED101 AND ES101 FOR SCALED DRAWINGS

A1 TELECOM BACKBONE REROUTE

NTS

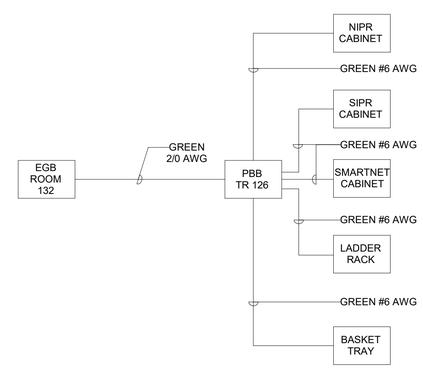

NOTE: BOND ALL TELECOMMUNICATIONS CONDUITS WITH A GREEN #12 AWG AND SLEEVES WITH A GREEN #6 AWG TO BASKET TRAYS

A6 TELECOM GROUNDING ONE-LINE DIAGRAM

1/2" = 1'-0"

REGISTERED COMMUNICATIONS DISTRIBUTION DESIGNER
Bicsi
Stephen A Leffler
BICSI ID # 110560
EXPIRES 12-31-21
RCDD
6.24.2021

US Army Corps of Engineers ®

MARK	DESCRIPTION	DATE

DESIGNED BY: S. LEFFLER
DRAWN BY: S. LEFFLER
CHECKED BY: R. RUBIO
SUBMITTED BY: E. OLMESS
DATE:
ANSI D
ISSUE DATE: JUNE 2022
CONTRACT NO.: W912PP-22-R-0021
FILENAME: K486-951-T-602

US ARMY CORPS OF ENGINEERS
ALBUQUERQUE
ALBUQUERQUE, NEW MEXICO

JACOBS
JACOBS ENGINEERING GROUP INC.
777 Main Street
Fort Worth, Tx 76102

COMBAT RESCUE HELICOPTER SIMULATOR FACILITY
KIRTLAND AIR FORCE BASE (AFB)
BERNALILLO COUNTY, NEW MEXICO

CRH SIMULATOR FACILITY ADAL
ONE-LINE DIAGRAMS

SHEET ID
951B
T-602

READY TO ADVERTISE

A1 FLOOR PLAN - LEVEL 1 - OVERALL

1/16" = 1'-0"

SECURITY GENERAL NOTES

A. SEE SHEET T-001 FOR SYMBOLS AND GENERAL NOTES

KEY PLAN

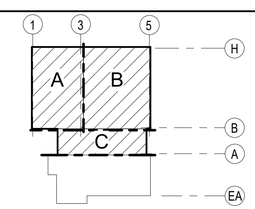

GRAPHIC SCALE

16 0 0 2 16 4 32

Scale: 1/16 INCH = 1 FOOT

PROJECT NORTH

PLAN NORTH

REGISTERED COMMUNICATIONS DISTRIBUTION DESIGNER
Bicsi
Stephen A Leffler
BICSI ID # 110560
EXPIRES 12-31-22
RCDD
6.24.2021

US Army Corps of Engineers ®

MARK	DESCRIPTION	DATE

ISSUE DATE: JUNE 2022
CONTRACT NO.: W912PP-22-R-0021

DESIGNED BY: S. LEFFLER
DRAWN BY: S. LEFFLER
CHECKED BY: R. RUBIO
SUBMITTED BY: E. OLNESS
SIZE: ANSI D
FILENAME: KA69591-TY110

US ARMY CORPS OF ENGINEERS
ALBUQUERQUE
ALBUQUERQUE, NEW MEXICO

JACOBS
JACOBS ENGINEERING GROUP INC.
777 Main Street
Fort Worth, TX 76102

COMBAT RESCUE HELICOPTER SIMULATOR FACILITY
KIRTLAND AIR FORCE BASE (AFB),
BERNALILLO COUNTY, NEW MEXICO

CRH SIMULATOR FACILITY ADAL

SECURITY PLAN - LEVEL 1 - OVERALL

SHEET ID
951B
TY110

READY TO ADVERTISE

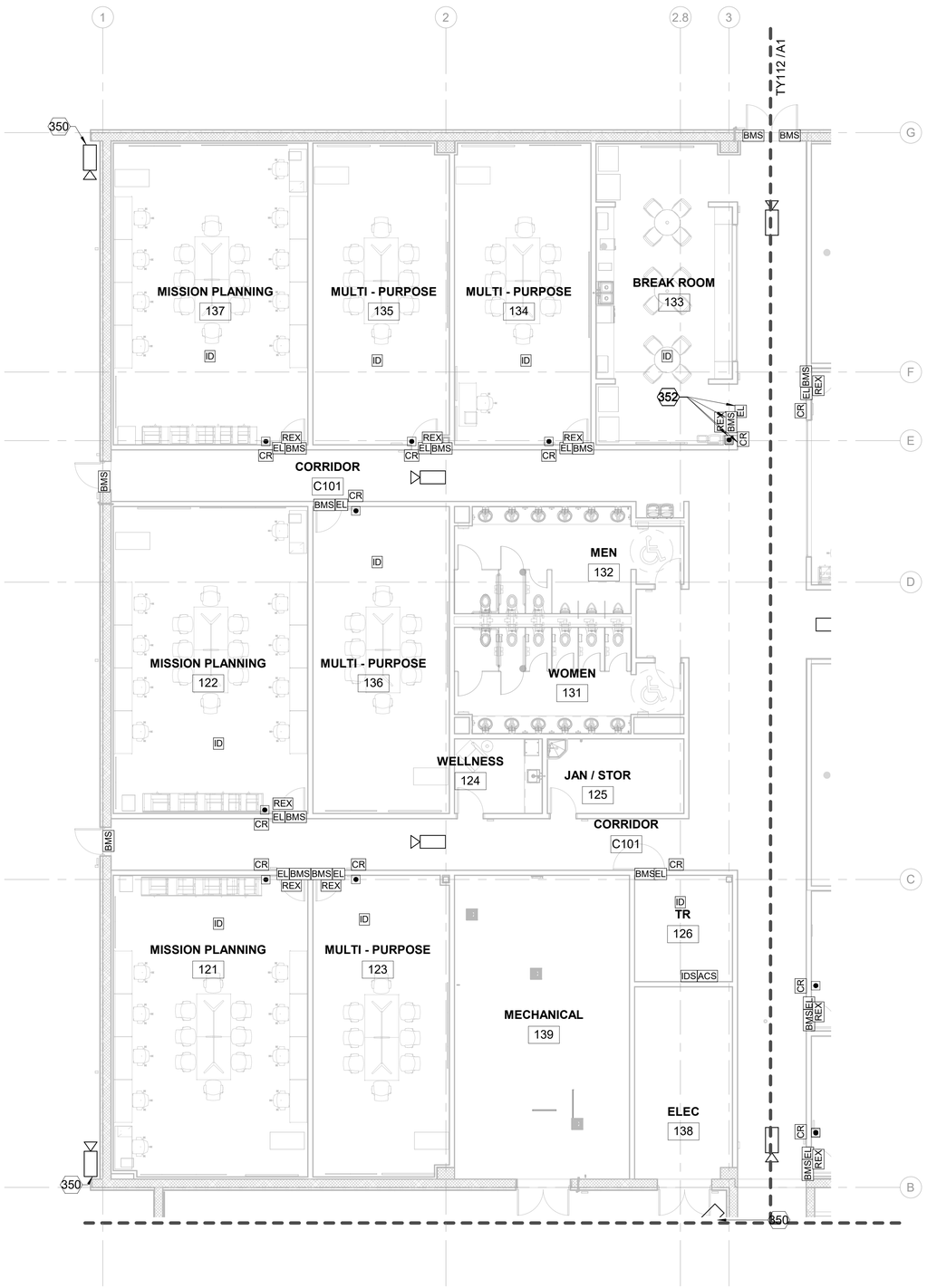

A1 PARTIAL FLOOR PLAN - LEVEL1 - AREA A

1/8" = 1'-0"

SECURITY GENERAL NOTES

A. SEE SHEET T-001 FOR SYMBOLS AND GENERAL NOTES

SHEET KEYNOTES

350	MOUNT EXTERIOR SECURITY CAMERAS AT 15'-0" AFF
352	CARD READER, BMS, PUSH BUTTON, RES AND ELECTRIC LOCK ARE TO BE PREWIRED ONLY TO BOX ABOVE CEILING AT THE BREAKROOM ONLY. MARK AS FUTURE.

KEY PLAN

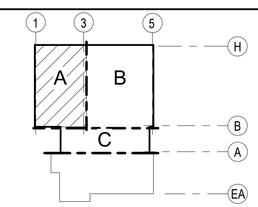

GRAPHIC SCALE

8 0 8 16

Scale: 1/8 INCH = 1 FOOT

PROJECT NORTH

PLAN NORTH

REGISTERED COMMUNICATIONS DISTRIBUTION DESIGNER
Bicsi
Stephen A Leffler
BICSI ID # 110560
EXPIRES 12-31-22
RCDD
6.24.2021

US Army Corps of Engineers ®

MARK	DESCRIPTION	DATE

DESIGNED BY: S. LEFFLER
DRAWN BY: S. LEFFLER
CHECKED BY: R. RUBIO
SUBMITTED BY: E. OLMESS
SIZE: ANSI D
ISSUE DATE: JUNE 2022
CONTRACT NO.: W912PP-22-R-0021
FILENAME: K486-951-TY111

US ARMY CORPS OF ENGINEERS
ALBUQUERQUE
ALBUQUERQUE, NEW MEXICO

JACOBS
JACOBS ENGINEERING GROUP INC.
777 Main Street
Fort Worth, TX 76102

COMBAT RESCUE HELICOPTER SIMULATOR FACILITY
KIRTLAND AIR FORCE BASE (AFB)
BERNALILLO COUNTY, NEW MEXICO

CRH SIMULATOR FACILITY ADAL

SECURITY FLOOR PLAN - LEVEL 1 - AREA A

SHEET ID
951B
TY111

READY TO ADVERTISE

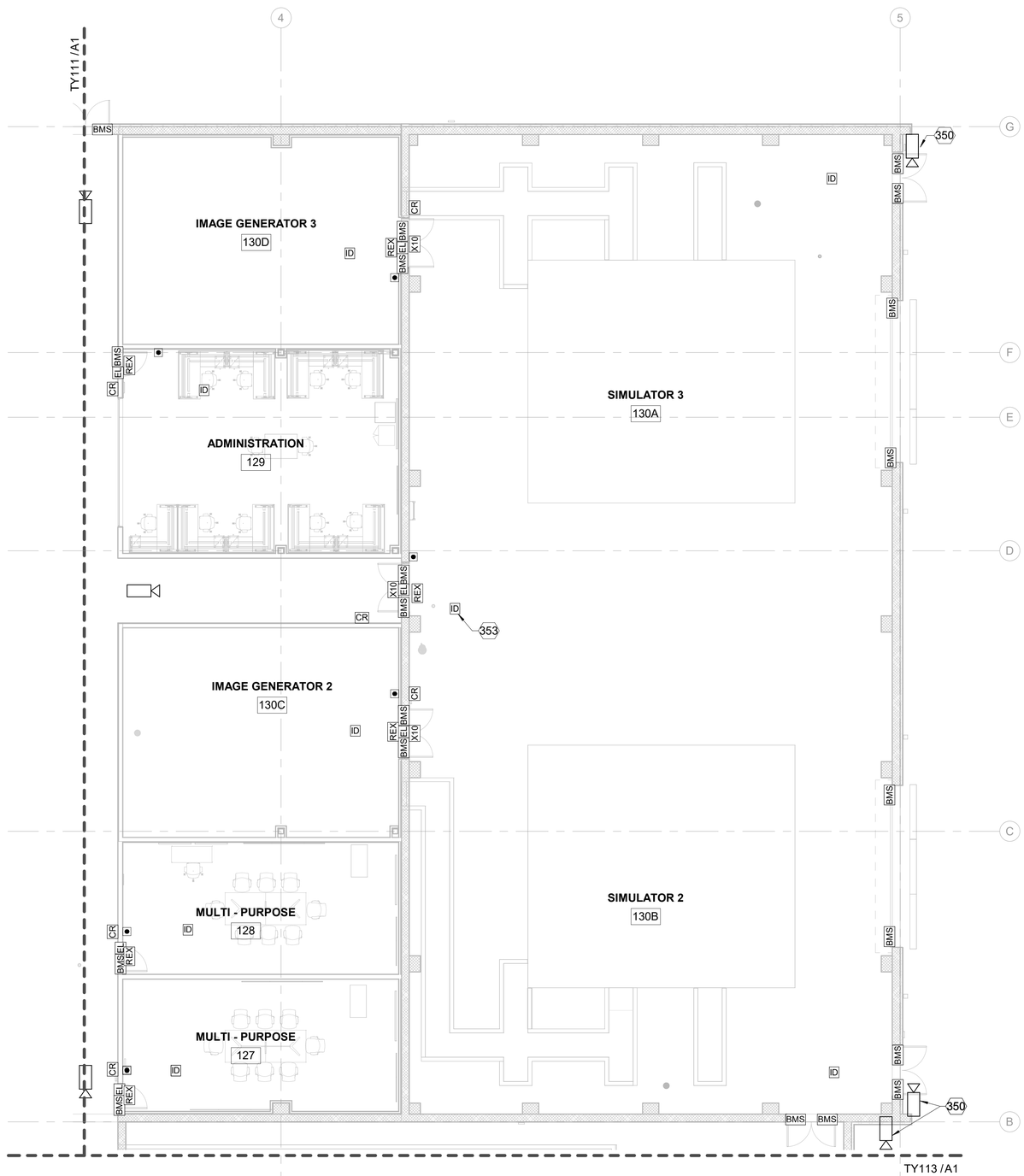

A1 PARTIAL FLOOR PLAN - LEVEL 1 - AREA B

1/8" = 1'-0"

SECURITY GENERAL NOTES

A. SEE SHEET T-001 FOR SYMBOLS AND GENERAL NOTES

SHEET KEYNOTES

350	MOUNT EXTERIOR SECURITY CAMERAS AT 15'-0" AFF
353	PROVIDE PENDANT MOUNT FOR PASSIVE INFRARED DETECTOR. (TYPICAL IN SIMULATOR BAYS)

KEY PLAN

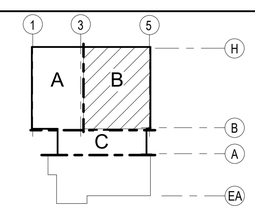

GRAPHIC SCALE

Scale: 1/8 INCH = 1 FOOT

PROJECT NORTH

PLAN NORTH

REGISTERED COMMUNICATIONS DISTRIBUTION DESIGNER
Bicsi
Stephen A Leffler
BICSI ID # 110560
EXPIRES 12-31-21
6-24-2021

US Army Corps of Engineers ®

MARK	DESCRIPTION	DATE

US ARMY CORPS OF ENGINEERS
ALBUQUERQUE
ALBUQUERQUE, NEW MEXICO

JACOBS
JACOBS ENGINEERING GROUP INC.
777 Main Street
Fort Worth, TX 76102

DESIGNED BY: S. LEFFLER
DRAWN BY: S. LEFFLER
CHECKED BY: R. RUBIO
SUBMITTED BY: E. OLMESS
SIZE: ANSI D
ISSUE DATE: JUNE 2022
CONTRACT NO.: W912PP-22-R-0021
FILENAME: K486-951-TY112

COMBAT RESCUE HELICOPTER SIMULATOR FACILITY
KIRTLAND AIR FORCE BASE (AFB),
BERNALILLO COUNTY, NEW MEXICO

CRH SIMULATOR FACILITY ADAL
SECURITY FLOOR PLAN - LEVEL 1 - AREA B

SHEET ID
951B
TY112

READY TO ADVERTISE

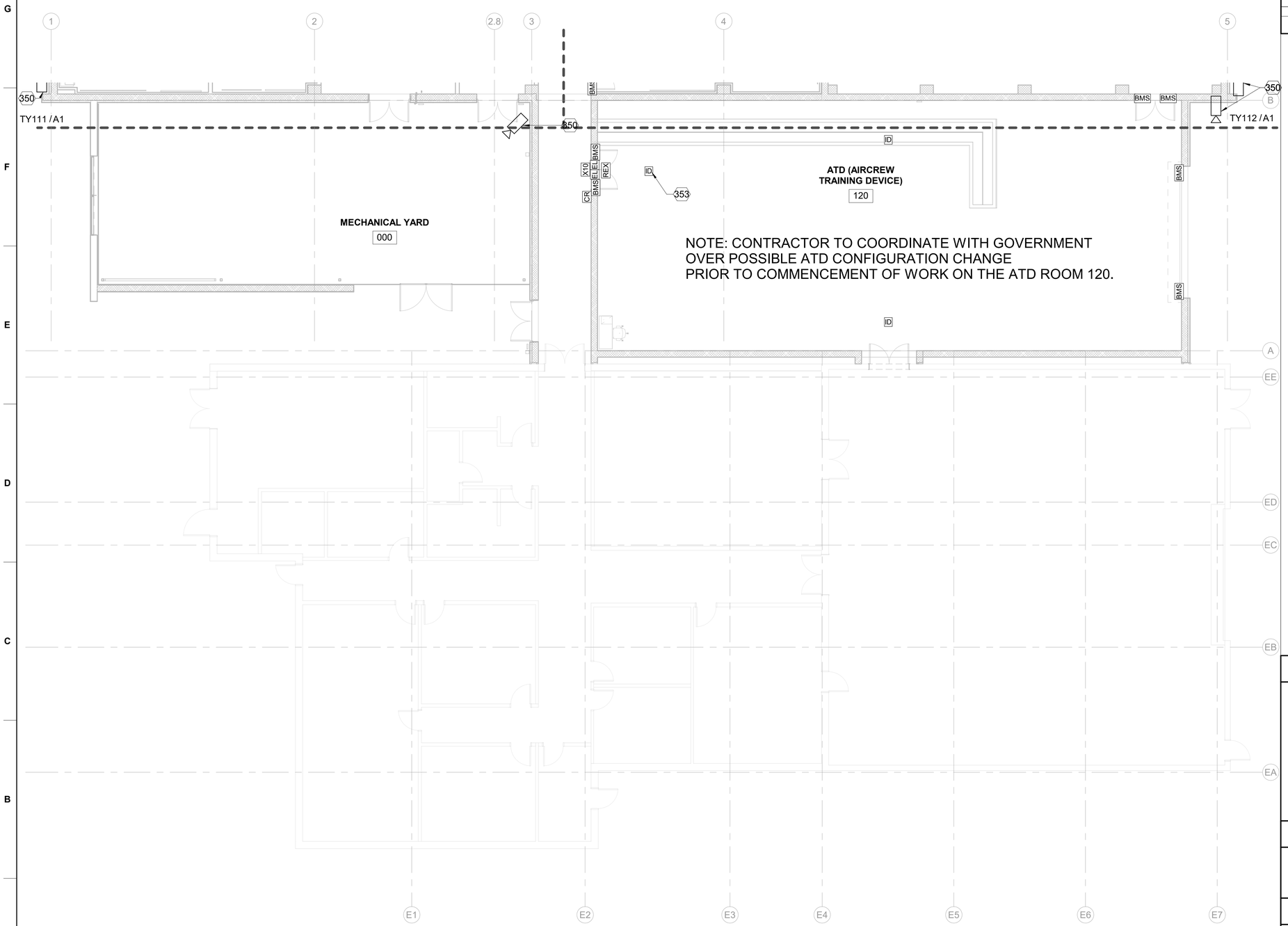

A1 PARTIAL FLOOR PLAN - LEVEL1 - AREA C

1/8" = 1'-0"

SECURITY GENERAL NOTES

A. SEE SHEET T-001 FOR SYMBOLS AND GENERAL NOTES

SHEET KEYNOTES

350	MOUNT EXTERIOR SECURITY CAMERAS AT 15'-0" AFF
353	PROVIDE PENDANT MOUNT FOR PASSIVE INFRARED DETECTOR. (TYPICAL IN SIMULATOR BAYS)

KEY PLAN

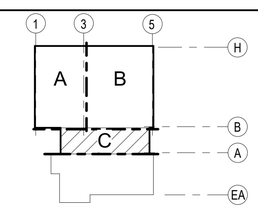

GRAPHIC SCALE

8 0 8 16

Scale: 1/8 INCH = 1 FOOT

PROJECT NORTH

PLAN NORTH

REGISTERED COMMUNICATIONS DISTRIBUTION DESIGNER
Bicsi
Stephen A Leffler
BICSI ID # 110560
EXPIRES 12-31-21
RCDD
6.24.2021

US Army Corps of Engineers ®

MARK	DESCRIPTION	DATE

DESIGNED BY: S. LEFFLER
DRAWN BY: S. LEFFLER
CHECKED BY: R. RUBIO
SUBMITTED BY: E. OLMESS
SIZE: ANSI D
ISSUE DATE: JUNE 2022
CONTRACT NO.: W912PP-22-R-0021
FILENAME: K486-951-TY113

US ARMY CORPS OF ENGINEERS
ALBUQUERQUE
ALBUQUERQUE, NEW MEXICO

JACOBS
JACOBS ENGINEERING GROUP INC.
777 Main Street
Fort Worth, TX 76102

COMBAT RESCUE HELICOPTER SIMULATOR FACILITY
KIRTLAND AIR FORCE BASE (AFB)
BERNALILLO COUNTY, NEW MEXICO

CRH SIMULATOR FACILITY ADAL

SECURITY FLOOR PLAN - LEVEL 1 - AREA C

SHEET ID
951B
TY113

READY TO ADVERTISE

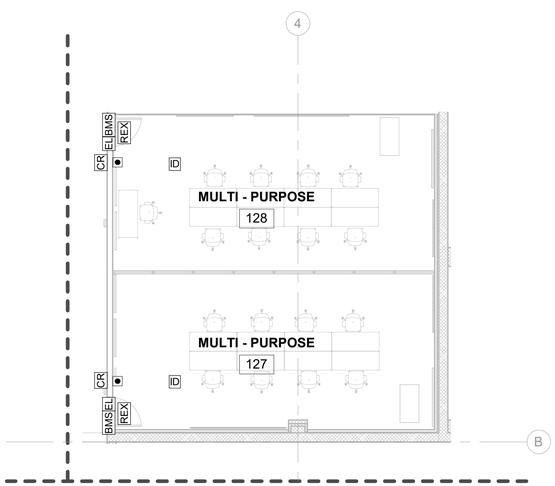

A1 BID OPTION 6 - SECURITY - ENLARGED PLAN

1/8" = 1'-0"

SECURITY GENERAL NOTES

A. SEE SHEET T-001 FOR SYMBOLS AND GENERAL NOTES

GRAPHIC SCALE

8 0 8 16

Scale: 1/8 INCH = 1 FOOT

PROJECT NORTH

PLAN NORTH

REGISTERED COMMUNICATIONS DISTRIBUTION DESIGNER
Bicsi
Stephen A Leffler
BICSI ID # 110560
EXPIRES 12-31-23
RCDD
6.24.2021

US Army Corps of Engineers ®

MARK	DESCRIPTION	DATE

DESIGNED BY: S. LEFFLER
DRAWN BY: S. LEFFLER
CHECKED BY: R. RUBIO
SUBMITTED BY: E. OLMESS
SIZE: ANSI D
ISSUE DATE: JUNE 2022
CONTRACT NO.: W912PP-22-R-0021
FILENAME: KAB8951-TY402

US ARMY CORPS OF ENGINEERS
ALBUQUERQUE
ALBUQUERQUE, NEW MEXICO

JACOBS
JACOBS ENGINEERING GROUP INC.
777 Main Street
Fort Worth, TX 76102

COMBAT RESCUE HELICOPTER SIMULATOR FACILITY
KIRTLAND AIR FORCE BASE (AFB)
BERNALILLO COUNTY, NEW MEXICO

CRH SIMULATOR FACILITY ADAL

BID OPTION 6 - SECURITY ENLARGED PLAN

SHEET ID
951B
TY402

READY TO ADVERTISE

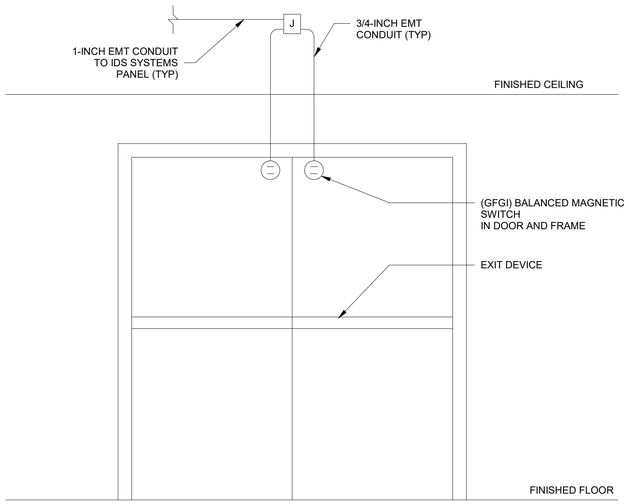

D1 MONITORED DOUBLE DOOR (TYP)
NTS

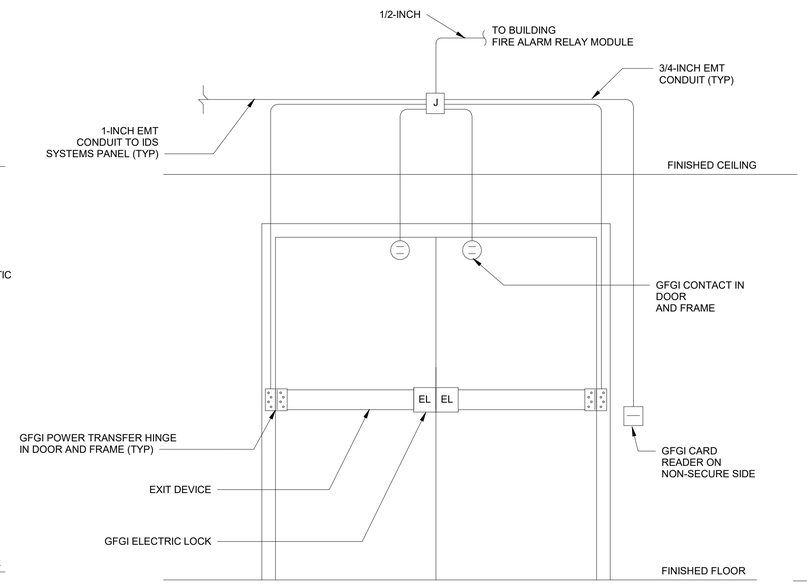

D4 SECURED DOUBLE DOOR ELEVATION (TYP)
NTS

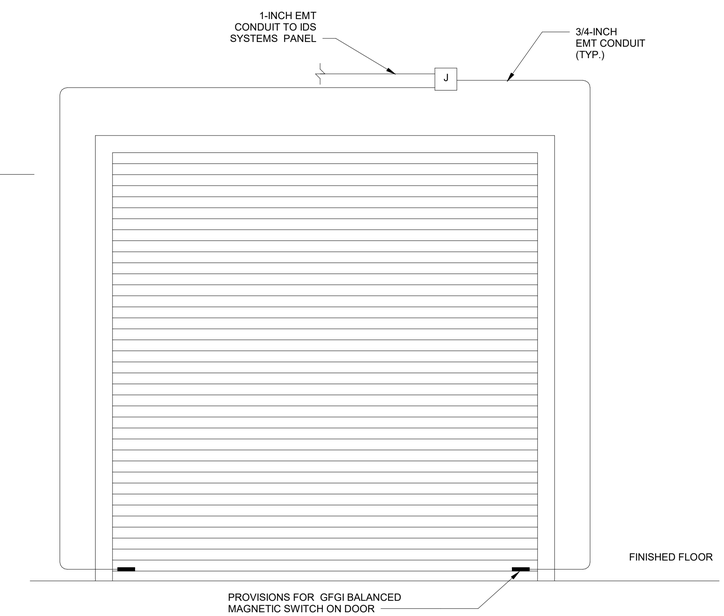

D7 MONITORED COILING OVERHEAD DOOR (TYP)
NTS

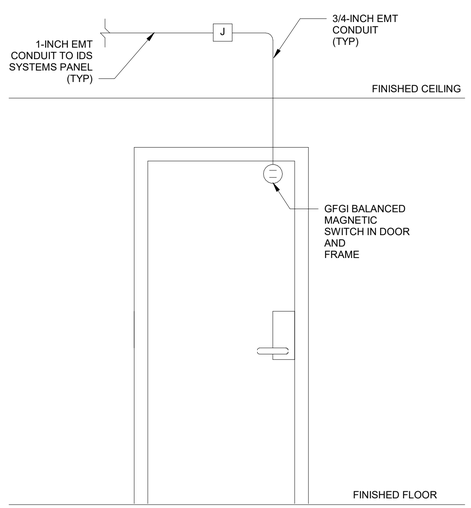

A1 MONITORED SINGLE DOOR (TYP)
NOT TO SCALE

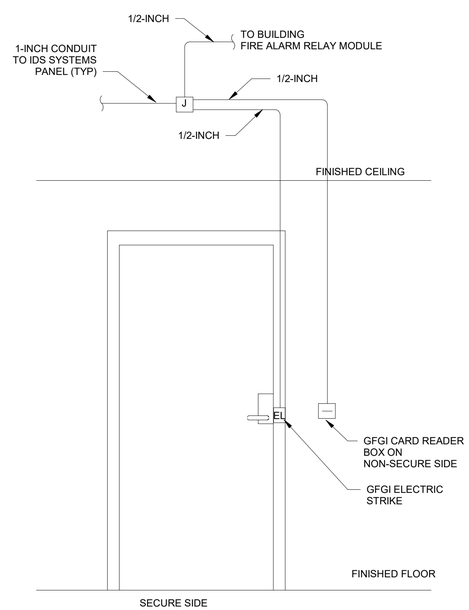

A4 SECURED SINGLE DOOR ELEVATION (TYP)
NTS

REGISTERED COMMUNICATIONS DISTRIBUTION DESIGNER
Bicsi
Stephen A Leffler
BICSI ID # 110560
EXPIRES 12-31-21
RCDD
6.24.2021

US Army Corps of Engineers ®

MARK	DESCRIPTION	DATE

DESIGNED BY: S. LEFFLER
DRAWN BY: S. LEFFLER
CHECKED BY: R. RUBIO
SUBMITTED BY: E. OLMESS
SIZE: ANSI D
ISSUE DATE: JUNE 2022
CONTRACT NO.: W912PP-22-R-0021
FILENAME: K486951-TY501

US ARMY CORPS OF ENGINEERS
ALBUQUERQUE
ALBUQUERQUE, NEW MEXICO

JACOBS
JACOBS ENGINEERING GROUP INC.
777 Main Street
Fort Worth, TX 76102

COMBAT RESCUE HELICOPTER SIMULATOR FACILITY
KIRTLAND AIR FORCE BASE (AFB)
BERNALILLO COUNTY, NEW MEXICO

CRH SIMULATOR FACILITY ADAL
DETAILS

SHEET ID
951B
TY501

READY TO ADVERTISE

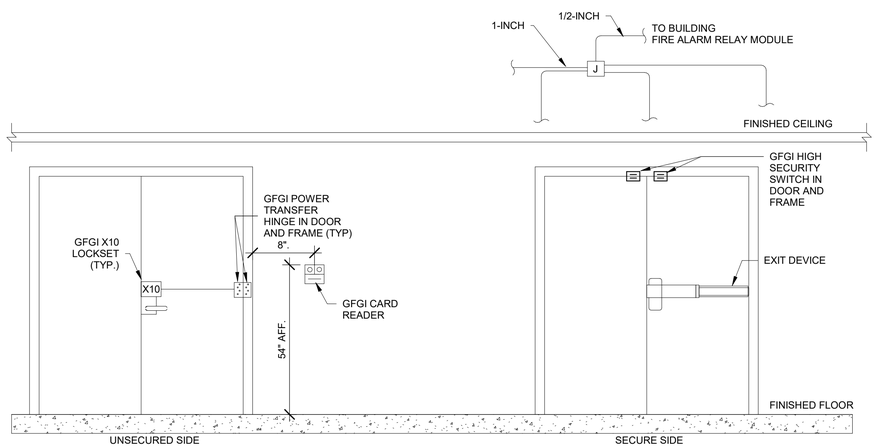

D1 CARD READER W-X10 LOCKSET (DOUBLE DOOR)

NTS

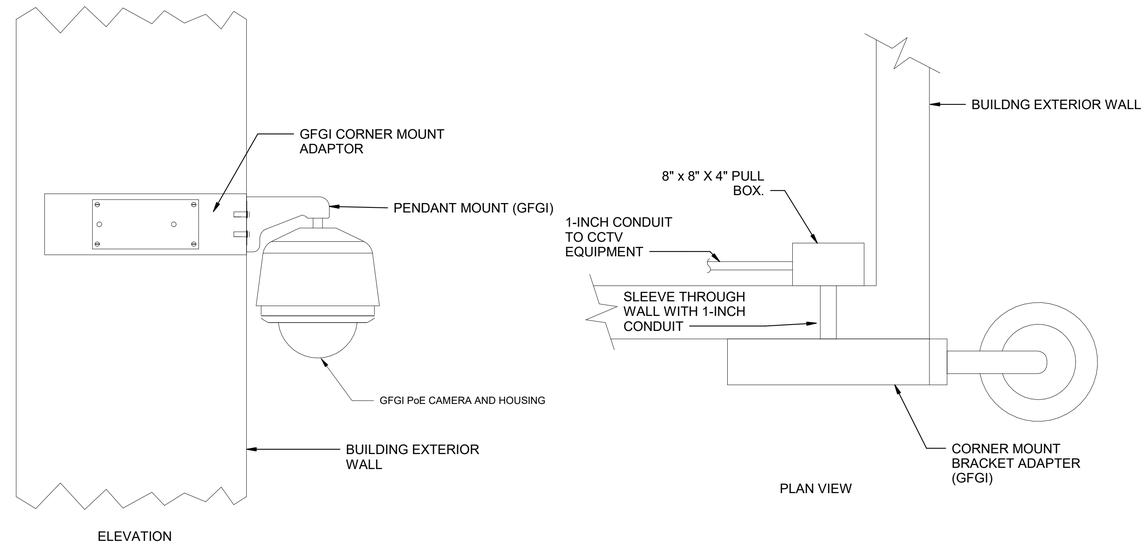

D5 OUTDOOR CORNER MOUNT DOME CAMERA

NOT TO SCALE

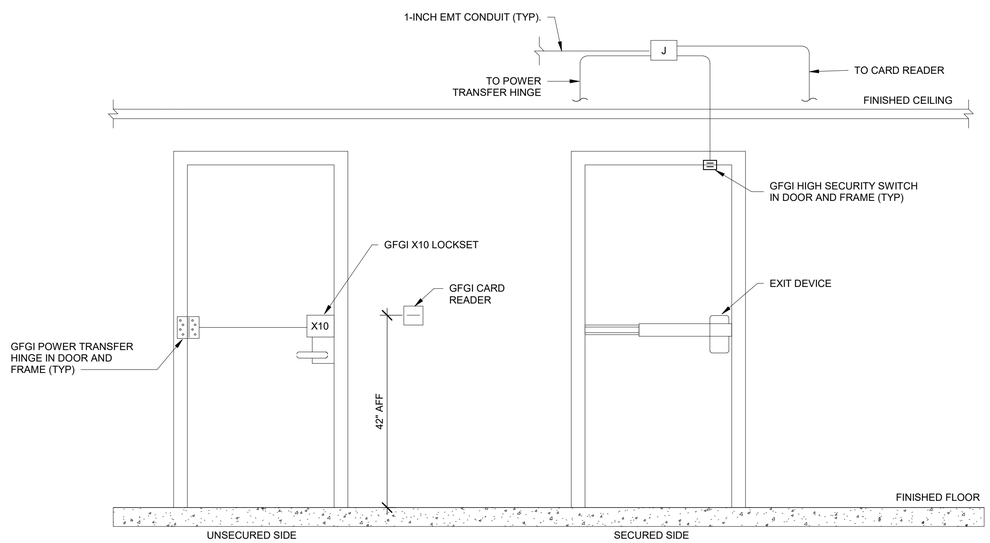

A1 CARD READER W-X10-LOCKSET (SINGLE DOOR)

NTS

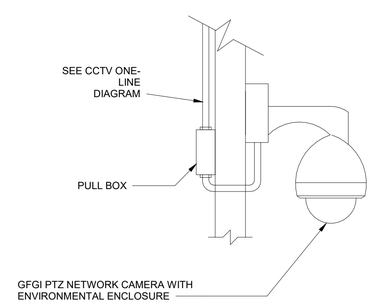

A5 WALL MOUNT EXTERIOR CAMERA DETAIL

NTS

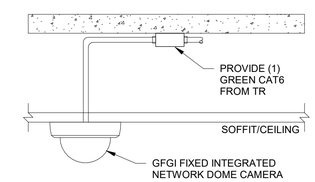

B5 CEILING MOUNTED INTERIOR CAMERA

NTS

REGISTERED COMMUNICATIONS DISTRIBUTION DESIGNER
Bicsi
Stephen A Leffler
BICSI ID # 110560
EXPIRES 12-31-20
RCDD
6.24.2021

US Army Corps of Engineers ®

MARK	DESCRIPTION	DATE

DESIGNED BY: S. LEFFLER
DRAWN BY: S. LEFFLER
CHECKED BY: R. RUBIO
SUBMITTED BY: E. OLMESS
SIZE: ANSI D
ISSUE DATE: JUNE 2022
CONTRACT NO.: W912PP-22-R-0021
FILENAME: K486-951-TY502

US ARMY CORPS OF ENGINEERS
ALBUQUERQUE
ALBUQUERQUE, NEW MEXICO

JACOBS
JACOBS ENGINEERING GROUP INC.
777 Main Street
Fort Worth, TX 76102

COMBAT RESCUE HELICOPTER SIMULATOR FACILITY
KIRTLAND AIR FORCE BASE (AFB),
BERNALILLO COUNTY, NEW MEXICO

CRH SIMULATOR FACILITY ADAL
DETAILS

SHEET ID
951B
TY502

READY TO ADVERTISE

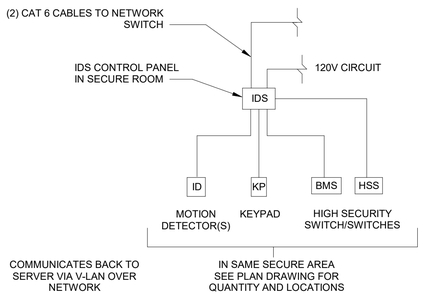

D1 TYPICAL SECURE ROOM IDS DIAGRAM

NTS

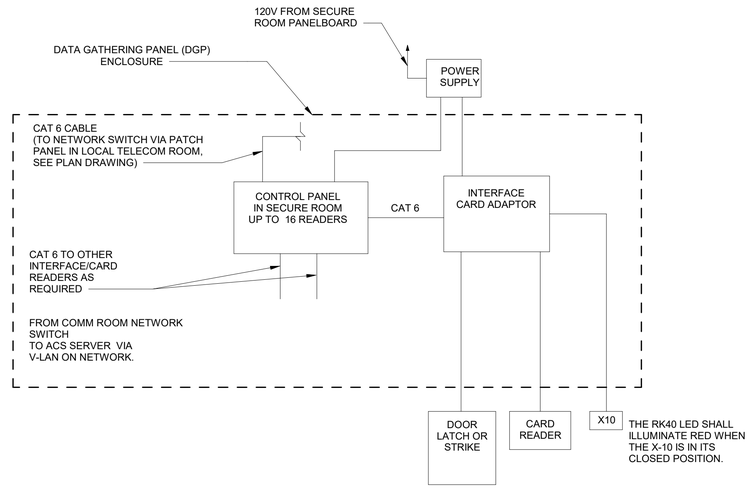

D5 TYPICAL SECURE ROOM ACS DIAGRAM

NTS

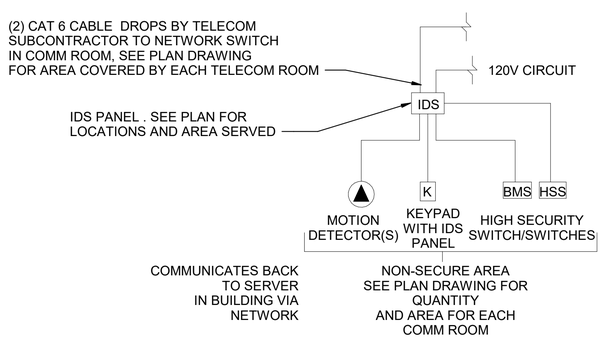

A1 TYPICAL NON-SECURE ROOM IDS DIAGRAM

NTS

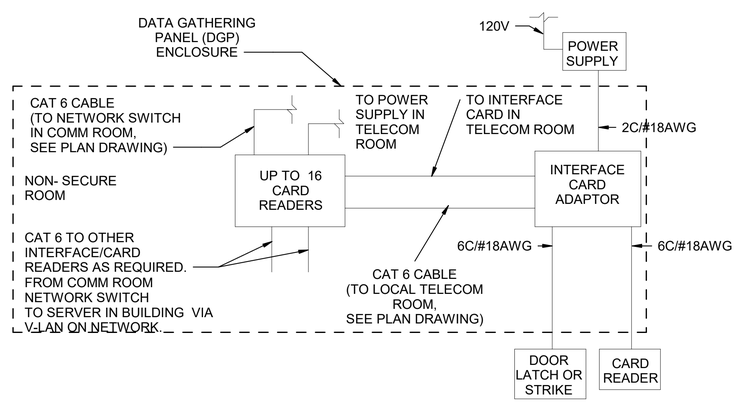

A5 TYPICAL NON-SECURE ROOM ACS DIAGRAM

NTS

REGISTERED COMMUNICATIONS DISTRIBUTION DESIGNER
Bicsi
Stephen A Leffler
BICSI ID # 110560
EXPIRES 12-31-22
6.24.2021

US Army Corps of Engineers ®

MARK	DESCRIPTION	DATE

DESIGNED BY: S. LEFFLER
DRAWN BY: S. LEFFLER
CHECKED BY: R. RUBIO
SUBMITTED BY: E. OLIVESS
SIZE: ANSI D
ISSUE DATE: JUNE 2022
CONTRACT NO.: W912PP-22-R-0021
FILENAME: K4689951-TY601

US ARMY CORPS OF ENGINEERS
ALBUQUERQUE
ALBUQUERQUE, NEW MEXICO

JACOBS
JACOBS ENGINEERING GROUP INC.
777 Main Street
Fort Worth, TX 76102

COMBAT RESCUE HELICOPTER SIMULATOR FACILITY
KIRTLAND AIR FORCE BASE (AFB),
BERNALILLO COUNTY, NEW MEXICO

CRH SIMULATOR FACILITY ADAL
ONE-LINE DIAGRAMS

SHEET ID
951B
TY601

READY TO ADVERTISE

BUILDING CODE ANALYSIS
CRH SIMULATOR ADAL - 923

DATE - 24 AUGUST 2020

GOVERNING CODE CRITERIA

AFMAN 32-1084	STANDARD FACILITY REQUIREMENTS	
AMERICANS WITH DISABILITIES ACT (ADA), ARCHITECTURAL BARRIERS ACT (ABAAG)		
IBC	INTERNATIONAL BUILDING CODE	2018
NFPA 101	LIFE SAFETY CODE	2018
UFC 1-200-01	DOD BUILDING CODE	CHANGE 2, 01 NOVEMBER 2018
UFC 3-101-01	ARCHITECTURE	CHANGE 4, 06 MARCH 2019
UFC 3-600-01	FIRE PROTECTION ENGINEERING	CHANGE 4, 07 February 2020
UFC 4-010-01	DOD MINIMUM ANTITERRORISM STANDARDS	12 DECEMBER 2018

TOTAL BUILDING AREA

BUILDING AREA PER UFC 3-101-01: (AREA CALCULATED FROM THE EXTERIOR FACE OF THE EXTERIOR WALL PLUS 1/2 COVERED AREAS)	14,860 SF
BUILDING AREA PER NFPA 101 & IBC 2018: (AREA CALCULATED FROM THE INTERIOR FACE OF THE EXTERIOR WALL)	13,190 SF

BUILDING AREA OF RENOVATION

FORM 1391 AUTHORIZED GUIDANCE AREA FOR RENOVATION:	4,682 SF
BUILDING AREA OF RENOVATION	4,679 SF

OCCUPANT LOAD

BASE BID			
BUSINESS USE	2,726 SF	(1:100)	28 OCCUPANTS
MECHANICAL/ELECTRICAL	61 SF	(1:300)	1 OCCUPANTS
BASE BID TOTAL	**2,787 SF**		**29 OCCUPANTS**
BID OPTIONS			
BUSINESS USE	1,410 SF	(1:100)	15 OCCUPANTS
BUSINESS COLLABORATION USE	419 SF	(1:30)	14 OCCUPANTS
MECHANICAL/ELECTRICAL	63 SF	(1:300)	1 OCCUPANTS
BID OPTIONS - OCCUPANT LOAD	**1,892 SF**		**30 OCCUPANTS**
TOTAL OCCUPANT LOAD			**59 OCCUPANTS**

1ST FLOOR AREA (W/ MAXIMUM OCCUPANT LOADS) PER UFC 3-600-01 CH 10 & NFPA 101 — MAXIMUM PROBABLE OCCUPANTS PER NFPA 101 TABLE 7.3.1.2

OCCUPANCY CLASSIFICATION - IBC (CHAPTER 3)

B	BUSINESS

GENERAL BUILDING HEIGHTS AND AREAS - IBC (CHAPTER 5)
NON-SEPARATED MIXED USE OCCUPANCY

ALLOWABLE HEIGHTS, BUILDING AREAS, AND NUMBER OF STORIES		
B	BUSINESS	TYPE II B
TABLE 504.3	ALLOWABLE HEIGHT:	75 FT
TABLE 504.4	ALLOWABLE NO. STORIES:	4
TABLE 506.2	ALLOWABLE AREA (PER FLOOR):	69,000 SF
ACTUAL HEIGHTS, BUILDING AREAS, AND NUMBER OF STORIES		
	ACTUAL TYPE	TYPE II B
	ACTUAL HEIGHT:	19'-1" FT
	ACTUAL NO. STORIES:	1
	ACTUAL AREA (PER FLOOR):	13,190 SF

CONSTRUCTION TYPE: **INTERIOR RENOVATION**

NON-SEPARATED MIXED USE ALLOWABLE AREA - IBC 508

BUILDING FIRST FLOOR ALLOWABLE AREA

OCCUPANCY	ALLOWABLE AREA	AREA INCREASE	TOTAL ALLOWABLE AREA	ACTUAL AREA
B	69,000	-	69,000	4,679
			1ST FLOOR TOTAL	**4,679**

TYPES OF CONSTRUCTION - IBC AND UFC

IBC TABLE 601	FIRE-RESISTANT REQUIREMENTS	
	STRUCTURAL FRAME	0 HOUR
	BEARING WALLS	
	EXTERIOR	0 HOUR
	INTERIOR	0 HOUR *
IBC TABLE 602	NONBEARING WALLS	
	EXTERIOR	0 HOUR
	INTERIOR	0 HOUR *
	FLOOR CONSTRUCTION	0 HOUR
	ROOF CONSTRUCTION	0 HOUR

FIRE-RESISTANCE-RATED CONSTRUCTION - IBC

TABLE 716.5	MINIMUM FIRE DOOR FIRE PROTECTION RATINGS	
1 HOUR FIRE BARRIER IN SHAFT, STAIRWELL, OR EXIT ENCLOSURE		60 MIN
TABLE 716.5	OPENING FIRE-PROTECTION RATINGS	
1 HOUR FIRE BARRIER		60 MIN

MEANS OF EGRESS - NFPA 101

TABLE 7.3.1.2	MAXIMUM FLOOR AREA ALLOWANCES PER OCCUPANT (LOAD)	
	STORAGE (SPRINKLERED)	500
	BUSINESS (SPRINKLERED)	100
SECTION 7.3.3.1	EGRESS WIDTH PER OCCUPANT SERVED (INCH/OCC)	
	STAIRWAYS (SPRINKLERED)	0.30
	OTHER EGRESS (SPRINKLERED)	0.20
SECTION 7.2.1.2.3.2	32 INCHES CLEAR MINIMUM EXIT WIDTH	
SECTION 7.3.4.1 (2)	MINIMUM MEANS OF EGRESS WIDTH IS 36 INCHES	
TABLE A.7.6	EXIT ACCESS TRAVEL DISTANCE (FEET)	
	STORAGE (SPRINKLERED)	400 FT
	BUSINESS (SPRINKLERED)	300 FT
TABLE A.7.6	COMMON PATH EGRESS TRAVEL (FEET)	
	STORAGE (SPRINKLERED)	100 FT
	BUSINESS (SPRINKLERED)	100 FT
TABLE A.7.6	DEAD ENDS - MAXIMUM LENGTH (FEET)	
	STORAGE (SPRINKLERED)	100 FT
	BUSINESS (SPRINKLERED)	50 FT

EGRESS WIDTH PER OCCUPANT - LEVEL COMPONENTS

FLOOR	LOAD	WIDTH PER OCC	WIDTH REQUIRED	DOOR WIDTH PROVIDED	LOAD CAPACITY	NOTES
LEVEL 1	59	0.2"	11.8"	(3)34" = 102"	480 PERSONS	-

GENERAL NOTES

A	THIS PROJECT WILL BE DESIGNED AND CONSTRUCTED IN CONFORMANCE WITH UFC 1-200-01, UFC 3-600-01, AND UFC 4-010-01. UFC 3-600-01 AND UFC 1-200-01 GENERALLY REFERENCES INTERNATIONAL BUILDING CODE FOR TYPE OF CONSTRUCTION, ALLOWABLE HEIGHT AND AREA LIMITATIONS, AND BUILDING SEPARATION REQUIREMENTS. UFC 3-600-01 GENERALLY REFERENCES NFPA 101, LIFE SAFETY CODE, FOR BUILDING CONSTRUCTION RELATED TO EGRESS AND SAFETY TO LIFE. IN CONFLICTS BETWEEN THE IBC AND NFPA 101 RELATED TO FIRE-RESISTANCE RATINGS, UFC 3-600-01 REQUIRES CONFORMANCE TO NFPA 101 AND APPLICABLE CRITERIA CONTAINED IN THIS UFC.
B	THE IBC FIRE-RESISTANCE REQUIREMENTS FOR PERMANENT PARTITIONS DO NOT APPLY TO NON-BEARING PARTITIONS. FOR FIRE RESISTANCE RATINGS OF NON-BEARING PARTITIONS (OTHER THAN OCCUPANCY SEPARATIONS), THIS PROJECT WILL COMPLY WITH NFPA 101 PER UFC 3-600-01.

WILLIAM ALLAN CLAY
NEW MEXICO
24233
PROFESSIONAL ENGINEER
Jun 23 2021

US Army Corps of Engineers ®

MARK	DESCRIPTION	DATE

DESIGNED BY: J. PERRY
DRAWN BY: J. MCKINNEY
CHECKED BY: N. CARRUTH
SUBMITTED BY: E. OLMESS
SIZE: ANSI D
ISSUE DATE: JUNE 2022
CONTRACT NO.: W912PP-22-R-0021
FILENAME: K486-923-GI010

US ARMY CORPS OF ENGINEERS
ALBUQUERQUE
ALBUQUERQUE, NEW MEXICO

JACOBS
JACOBS ENGINEERING GROUP INC.
777 Main Street
Fort Worth, TX 76102

COMBAT RESCUE HELICOPTER SIMULATOR FACILITY
KIRTLAND AIR FORCE BASE (AFB)
BERNALILLO COUNTY, NEW MEXICO

PARTIAL RENOVATION BUILDING 923
CODE ANALYSIS

SHEET ID
923
GI010

READY TO ADVERTISE

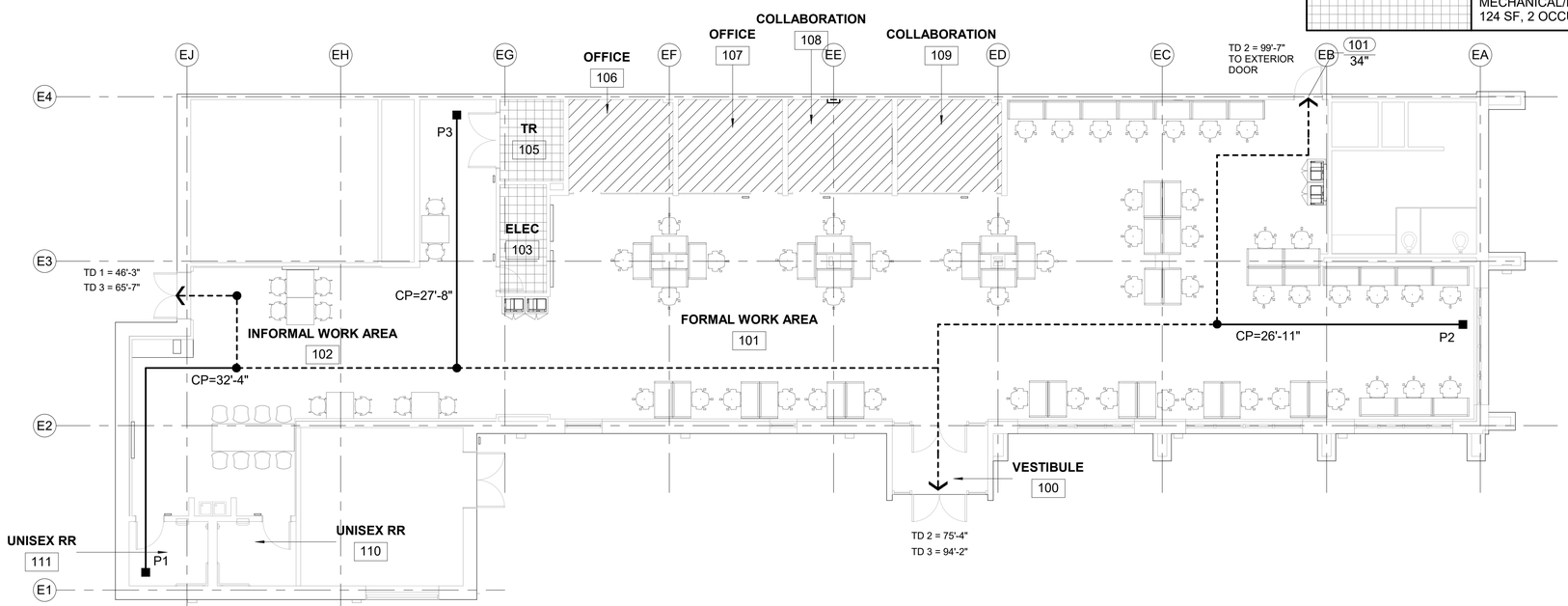

D1 OVERALL LIFE SAFETY PLAN - BID OPTIONS

1/8" = 1'-0"

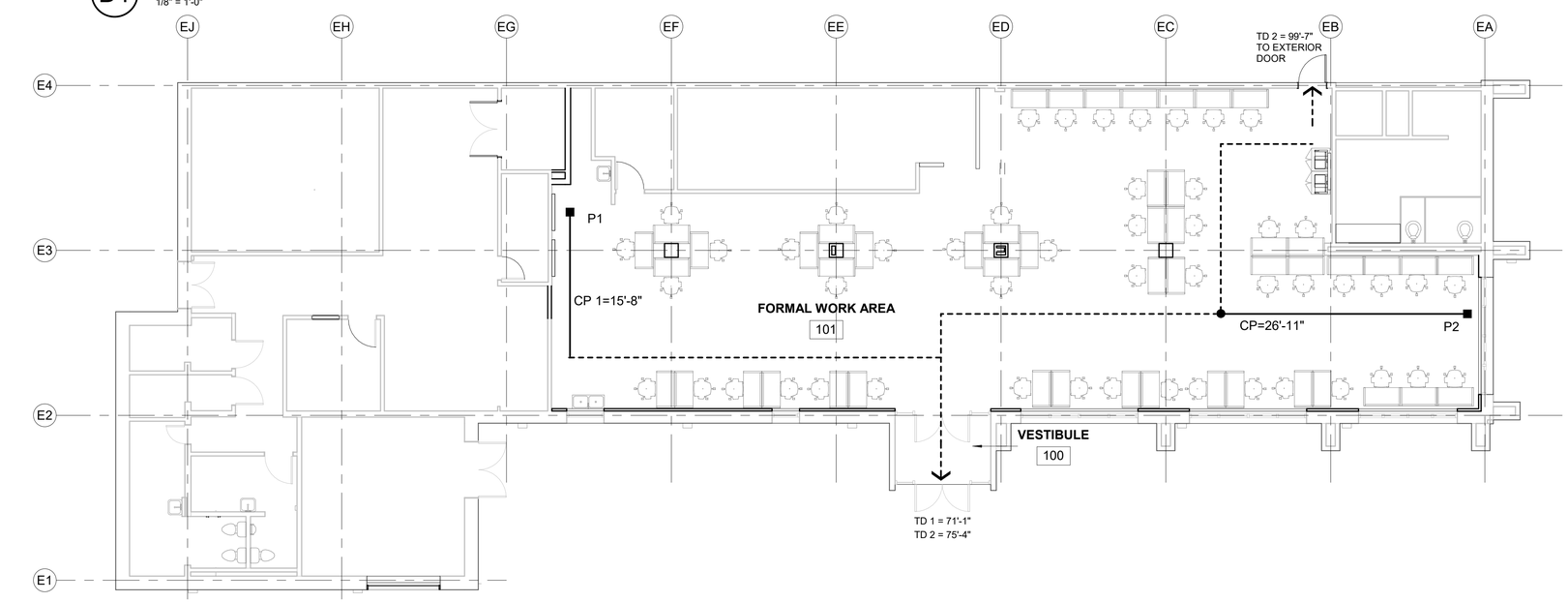

A1 OVERALL LIFE SAFETY PLAN - LEVEL 1 - BASE BID

1/8" = 1'-0"

OCCUPANCY LEGEND - NFPA 101

(NO PATTERN)	BUSINESS USE (100) 4,136 SF, 42 OCCUPANTS
	BUSINESS COLLABORATION USE (30) 419 SF, 16 OCCUPANTS
	MECHANICAL/ELECTRICAL USE (300) 124 SF, 2 OCCUPANTS

GENERAL NOTES - LIFE SAFETY PLAN

A	WHERE A PARTITION IS INDICATED TO BE RATED, PROVIDE A THROUGH PENETRATION FIRE STOPPING SYSTEM CONSTRUCTED IN STRICT COMPLIANCE WITH THE FIRE TEST DESIGN (TESTED AND COMPATIBLE WITH THE LEVEL OF RATING INDICATED AT ALL PENETRATIONS. IF NO TEST IS REFERENCED, PROVIDE AN INDUSTRY RECOGNIZED TEST APPLICABLE TO THE PARTITION TYPE
B	THIS SHEET IS FOR REFERENCE ONLY, IT IS NOT PART OF THE CONSTRUCTION CONTRACT AND ALL INFORMATION CONTAINED HEREIN IS LOCATED ON THE CONSTRUCTION DOCUMENTS
C	REFER TO PARTIAL LIFE SAFETY PLANS FOR OCCUPANCY LOADS, EXIT CAPACITY, TRAVEL DISTANCES, AND EXTENT OF FIRE RATED WALL CONSTRUCTION

LIFE SAFETY LEGEND

PATH OF EXIT TRAVEL WITH DISTANCES FROM SELECTED REMOTE LOCATIONS TO NEAREST EXIT. INCLUDES; TOTAL TRAVEL DISTANCE (TD) AND COMMON PATH OF TRAVEL(CP).

146 TD 75 CP — INDICATES START OF CP & TD

INDICATES END OF CP

INDICATES POINT OF EXIT

117 — ROOM NUMBER

17 — CALCULATED ROOM OCCUPANCY LOAD

123B — EXIT LOCATION (DOOR NUMBER)

32" — TOTAL CLEAR WIDTH

EXIT LIGHT FIXTURE, REFER TO ELECTRICAL DRAWINGS

DESIGN CRITERIA

A	NFPA 101 LIFE SAFETY CODE, 2018 EDITION; EGRESS REQUIREMENTS
B	INTERNATIONAL BUILDING CODE 2018; OCCUPANCY CLASSIFICATION, CONSTRUCTION TYPE AND CONSTRUCTION REQUIREMENTS

OCCUPANT LOAD SUMMARY

NAME	NUMBER	AREA	LOAD FACTOR	OCCUPANT LOAD
COLLABORATION	108	117 SF	30 SF	4
OFFICE	107	117 SF	30 SF	4
OFFICE	106	117 SF	30 SF	4
COLLABORATION	109	117 SF	30 SF	4
INFORMAL WORK AREA	102	1013 SF	100 SF	11
FORMAL WORK AREA	101	2740 SF	100 SF	28
VESTIBULE	100	79 SF	100 SF	1
UNISEX RR	110	59 SF	100 SF	1
UNISEX RR	111	61 SF	100 SF	1
ELEC	103	61 SF	300 SF	1
TR	105	62 SF	300 SF	1
TOTAL:		4543 SF		60

KEY PLAN

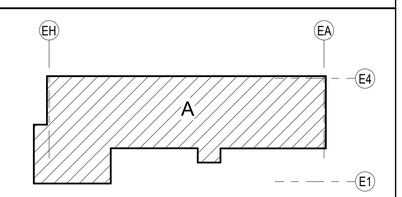

GRAPHIC SCALE

8 0 8 16

Scale: 1/8 INCH = 1 FOOT

PROJECT NORTH

PLAN NORTH

WILLIAM ALLAN CLAY
NEW MEXICO
24233
PROFESSIONAL ENGINEER
Jun 23 2021

US Army Corps of Engineers ®

MARK	DESCRIPTION	DATE

ISSUE DATE: JUNE 2022
CONTRACT NO.: W912PP-22-R-0021

DESIGNED BY: J. PERRY
DRAWN BY: J. MCKINNEY
CHECKED BY: N. CARRUTH
SUBMITTED BY: E. OLIVESS
SIZE: ANSI D
FILENAME: KA89-923-GI011

US ARMY CORPS OF ENGINEERS
ALBUQUERQUE
ALBUQUERQUE, NEW MEXICO

JACOBS
JACOBS ENGINEERING GROUP INC.
777 Main Street
Fort Worth, TX 76102

COMBAT RESCUE HELICOPTER SIMULATOR FACILITY
KIRTLAND AIR FORCE BASE (AFB),
BERNALILLO COUNTY, NEW MEXICO

PARTIAL RENOVATION BUILDING 923

LIFE SAFETY PLAN - LEVEL 1

SHEET ID
923
GI011

READY TO ADVERTISE

D1 INTERIOR VIEW 2

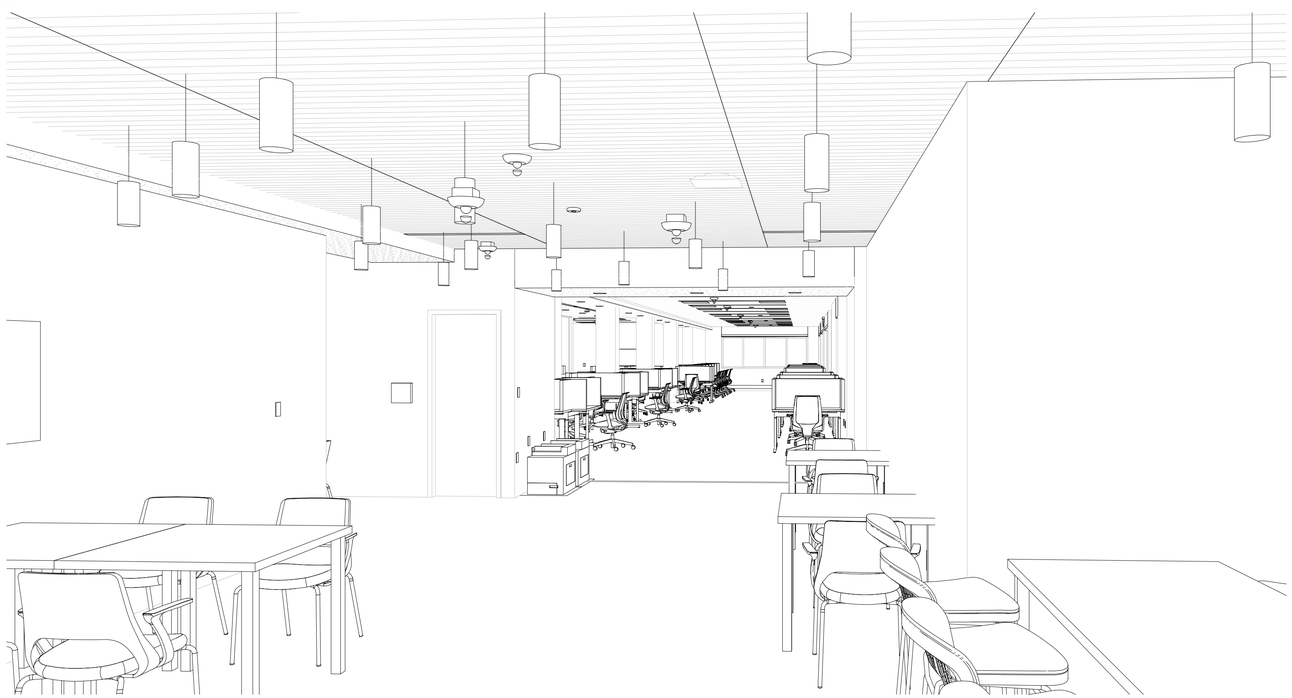

A1 INTERIOR VIEW 1

GENERAL NOTES

A MANUFACTURER PRODUCTS INDICATED ESTABLISHES A MINIMUM LEVEL OF ACCEPTABLE QUALITY. IT IS NOT INTENDED TO LIMIT THE SELECTION OF APPROVED EQUIVALENT PRODUCTS.

B BASE BID INCLUDES COMPLETE DEMOLITION OF BUILDING 954 AND BUILDING 960, NEW CONSTRUCTION FOR COMBAT RESCUE HELICOPTER SIMULATOR ADAL FACILITY, BUILDING 923 INTERIOR CLASSROOM RENOVATION, SITE IMPROVEMENTS, SITE PREPARATION AND PLACEMENT OF TEMPORARY TRAILERS.

C VERIFY AND DOCUMENT CONDITIONS AND DIMENSIONS ON THE JOB.

D DO NOT SCALE THE DRAWINGS FOR CONSTRUCTION PURPOSES.

E VERIFY SIZE, LOCATION, AND CHARACTERISTICS OF ALL EQUIPMENT TO BE FURNISHED WITH MANUFACTURERS AND SUPPLIERS BEFORE BEGINNING CONSTRUCTION.

F ALL PLAN DIMENSIONS ARE TO FACE OF GYPSUM BOARD, FACE OF CONCRETE, FACE OF CMU, OR CENTERLINE OF COLUMN.

G REFER TO MECHANICAL, PLUMBING, AND ELECTRICAL DRAWINGS FOR ADDITIONAL LOCATIONS OF PENETRATIONS OCCURING WITHIN FLOORS, WALLS, CEILINGS, AND ROOF SYSTEMS.

H COORDINATE LOCATIONS OF ALL FLOOR DRAINS WITH PLUMBING DRAWINGS

I VERIFY SIZE AND LOCATION OF ALL OPENINGS FOR EQUIPMENT AND RELATED WORK

J REFER TO MECHANICAL, PLUMBING, AND ELECTRICAL DRAWINGS FOR LOCATIONS OF EQUIPMENT NOT SHOWN ON ARCHITECTURAL DRAWINGS

K FINISH FLOOR ELEVATION OF 100'-0" IS A RELATIVE ELEVATION USED FOR DESIGN COORDINATION.

L ALL COLUMN GRIDS IN BUILDING 923 ARE EXISTING AND TO BE FIELD VERIFIED.

LEGEND

MATERIALS

- CONCRETE/ PRECAST CONCRETE
- FIBERGLASS BATT INSULATION
- MINERAL WOOL SEMI RIGID INSULATION
- POLYISOCYANURATE RIGID INSULATION
- GYPSUM BOARD

ANNOTATION CALLOUTS/DRAWING SYMBOLS

- 1 / A101 — EXTERIOR ELEVATION; SHEET NUMBER WHERE SECTION/DETAIL IS DRAWN
- 1 / A101 — SECTION; SHEET NUMBER WHERE SECTION/DETAIL IS DRAWN
- 1 SIM / A-101 — SHEET NUMBER WHERE SECTION/DETAIL IS DRAWN
- SPOT ELEVATION
- Name Elevation — FLOOR LEVEL & NAME
- 000 — SHEET KEYNOTE
- MATCHLINE — MATCHLINE
- XX / XXXX
- PLAN NORTH — TRUE NORTH — NORTH ARROW

ROOM NAME

- 101 — ROOM NAME/NUMBER
- IW-1 — WINDOW TYPE
- 1i — WALL TYPE
- 0 — GRID / COLUMN LINE DESIGNATOR
- 101 — DOOR NUMBER
- 1 — REVISION TAG

ROOM NAME

- 101 — ROOM NUMBER

INDEX OF DRAWINGS

NUMBERING SYSTEM:

A-001

DISCIPLINE:
C - CIVIL
L - LANDSCAPE
A - ARCHITECTURE
M - MECHANICAL
E - ELECTRICAL
P - PLUMBING
S - STRUCTURAL
K - FOOD SERVICE

SHEET NUMBER WITHIN SERIES

SERIES NUMBER

REGISTERED ARCHITECT RICHARD G. PERRY JR. 76592 STATE OF TEXAS
6.24.2021

US Army Corps of Engineers ®

MARK	DESCRIPTION	DATE

DESIGNED BY: J. PERRY
DRAWN BY: J. MCKINNEY
CHECKED BY: N. CARRUTH
SUBMITTED BY: E. OLNESS
DATE:
ANSI D
ISSUE DATE: JUNE 2022
CONTRACT NO.: W912PP-22-R-0021
FILENAME: KA69-923-A001

US ARMY CORPS OF ENGINEERS
ALBUQUERQUE
ALBUQUERQUE, NEW MEXICO

JACOBS
JACOBS ENGINEERING GROUP INC.
77 Main Street
Fort Worth, Texas 76102

COMBAT RESCUE HELICOPTER SIMULATOR FACILITY
KIRTLAND AIR FORCE BASE (AFB),
BERNALILLO COUNTY, NEW MEXICO

PARTIAL RENOVATION BUILDING 923
GENERAL NOTES AND SYMBOLS

SHEET ID
923
A-001

READY TO ADVERTISE

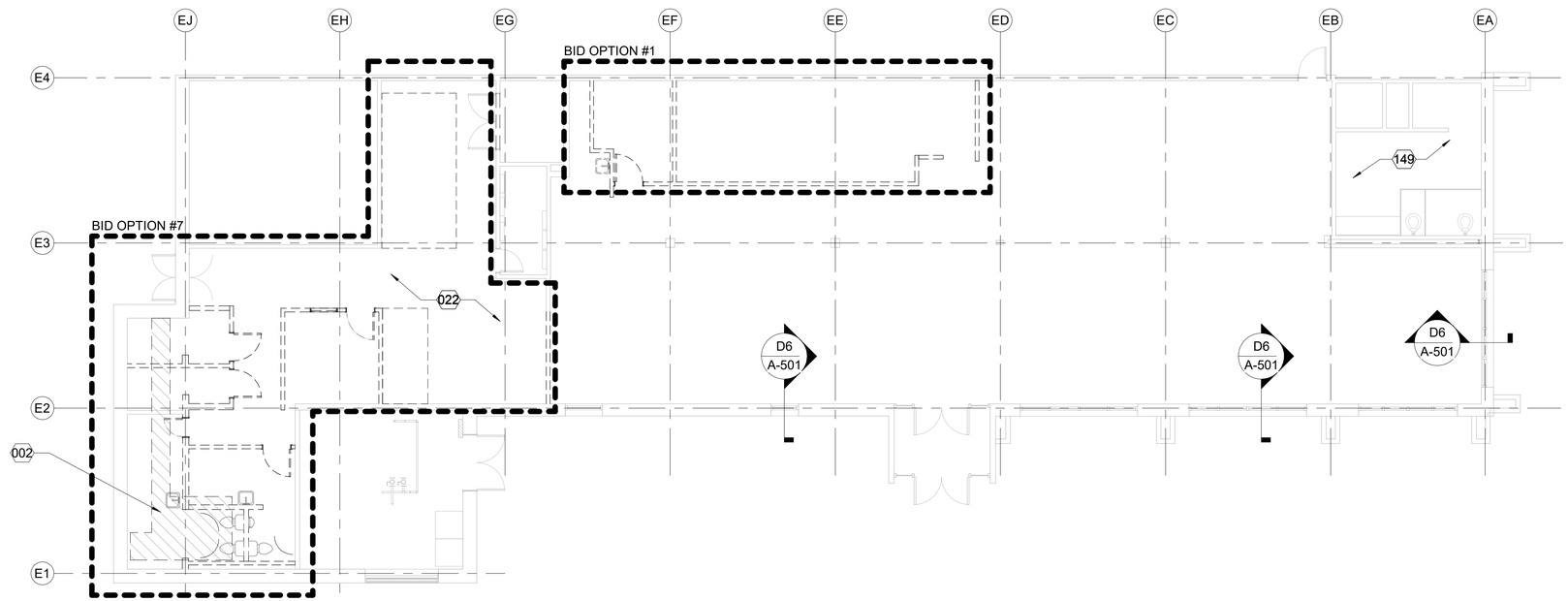

D1 DEMOLITION PLAN - BID OPTIONS

1/8" = 1'-0"

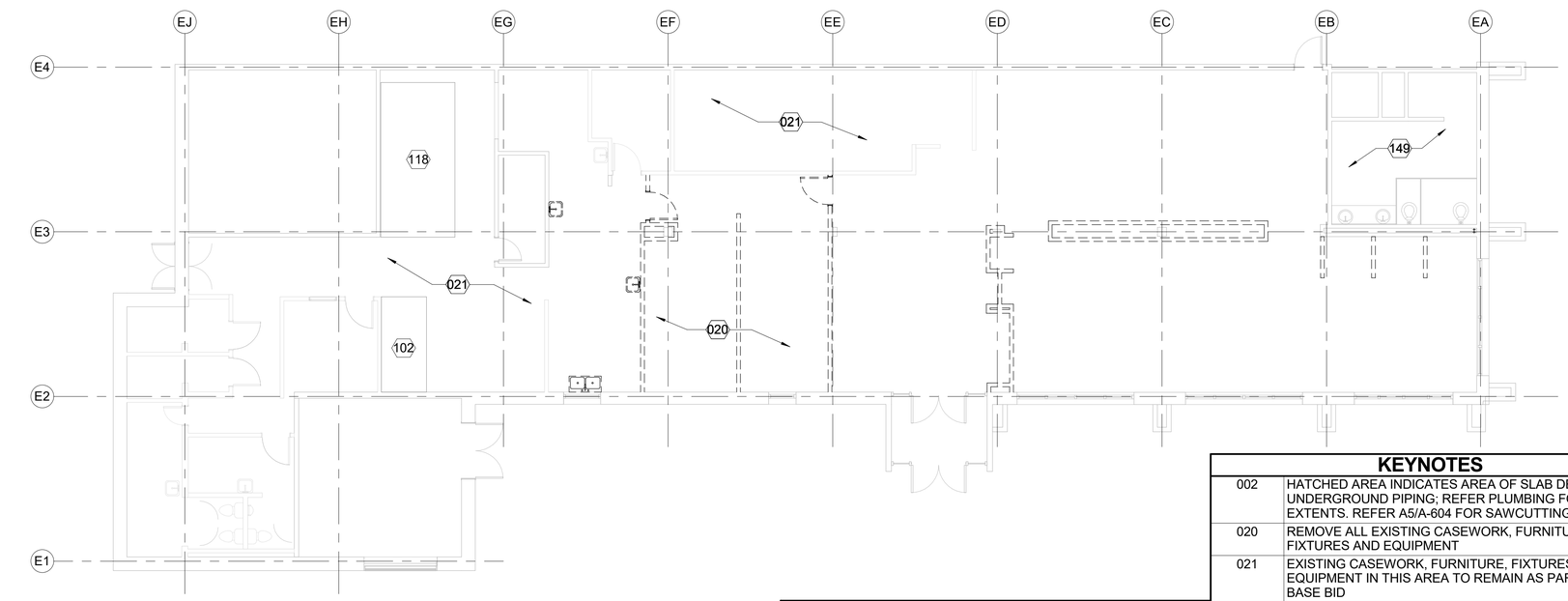

A1 DEMOLITION PLAN - BASE BID

1/8" = 1'-0"

DEMOLITION LEGEND

	EXISTING WALL AND FIXTURES TO BE REMOVED
	EXISTING WALL TO REMAIN; REMOVE ALL INTERIOR FINISHES WHERE APPLICABLE

KEYNOTES

002	HATCHED AREA INDICATES AREA OF SLAB DEMO FOR UNDERGROUND PIPING; REFER PLUMBING FOR EXTENTS. REFER A5/A-604 FOR SAWCUTTING DETAIL.
020	REMOVE ALL EXISTING CASEWORK, FURNITURE, FIXTURES AND EQUIPMENT
021	EXISTING CASEWORK, FURNITURE, FIXTURES AND EQUIPMENT IN THIS AREA TO REMAIN AS PART OF THE BASE BID
022	EXISTING CASEWORK, FURNITURE, FIXTURES AND EQUIPMENT TO BE REMOVED
102	EXISTING EQUIPMENT
118	EXISTING FLOOR TO CEILING WALK-IN FREEZER
149	ADJACENT TENANT; NOT IN SCOPE

GENERAL NOTES - DEMOLITION

A THE SCOPE OF DEMOLITION: REMOVE ALL EXISTING FLOOR AND APPLIED WALL FINISHES, VINYL, AND WALL BASES, FURR-OUTS, PARTITIONS, EXISTING GYP BOARD, DESIGNATED PORTIONS OF WALLS, WAINSCOTS, CEILING SYSTEMS, UTILITY SUPPORTS, EQUIPMENT, AND OTHER MISC CONSTRUCTION IN THE DESIGNATED AREA UON. REMOVE ALL EXISTING HARDWARE ON WALLS, FLOORS, ETC; PATCH ALL HOLES LEFT BY REMOVED HARDWARE TO MATCH ADJACENT FINISHES. PROVIDE A CLEAN SURFACE TO INITIATE NEW CONSTRUCTION

B EXISTING CONSTRUCTION SHOWN BASED UPON OWNER FURNISHED PLANS AND ONSITE OBSERVATIONS. ANY DISCREPANCIES BETWEEN DRAWINGS AND ACTUAL FIELD CONDITIONS SHALL BE REPORTED TO THE A/E PRIOR TO PROCEEDING WITH WORK.

C REPAIR AND REFINISH EXISTING FLOOR AND ROOF PENETRATIONS WHERE DUCTWORK, PIPING, PLUMBING FIXTURES AND DRAINS WERE REMOVED TO MATCH ADJACENT FINISHES.

D CONTRACTOR TO EXERCISE CARE DURING DEMOLITION OF AREAS LIKELY TO CONTAIN HIDDEN OR OBSCURED SYSTEMS BELOW FINISHED SURFACES

E THE CONTRACTOR SHALL VERIFY CONSTRUCTION LAYOUT PRIOR TO COMMENCEMENT OF CONSTRUCTION

F IT IS THE INTENT OF THESE DRAWINGS AND SPECIFICATIONS TO CALL FOR A DEMOLITION THAT IS COMPLETE. IT IS NOT THE INTENT TO GIVE EVERY DETAIL ON THE DRAWINGS AND IN THE SPECIFICATIONS. IF ANY ITEM OF WORK IS INDICATED IN THE DRAWINGS, IT IS CONSIDERED SUFFICIENT FOR INCLUSION IN THE CONTRACT.

G DO NOT SCALE DRAWINGS FOR CONSTRUCTION PURPOSES.

H COORDINATE WITH CONTRACTING OFFICER FOR DEMOLITION STAGING/SCHEDULE BEFORE DEMOLITION BEGINS.

I REPAIR AND FINISH ALL HOLES IN WALLS, CONCRETE COLUMNS, AND FLOORS LEFT FROM REMOVAL (HARDWARE, FASTENERS, DUCTS, PIPES, CONDUIT, ETC) AND RESTORE WALLS TO ORIGINAL INTEGRITY; RE:STRUC, MECH, PLUMB, ELEC

J REFER TO STRUCTURAL, MECHANICAL, PLUMBING, AND ELECTRICAL DRAWINGS FOR ADDITIONAL LOCATIONS OF PENETRATIONS OCCURRING WITHIN FLOOR, WALL, CEILING, AND ROOF SYSTEMS.

K COORDINATE ALL NEW M.E.P OPENINGS REQUIRED IN THE HORIZONTAL ASSEMBLIES.

L REMOVE ALL BLIND AND DRAPE SYSTEMS.

M ALL SIGNAGE TO BE REMOVED

N ALL INTERIOR DOORS, FRAMES, AND HARDWARE TO BE REMOVED.

O CONTRACTOR SHOULD REPAIR ANY DAMAGE TO WALLS AND FLOORS DURING CONSTRUCTION TO ITS ORIGINAL CONDITION

Q ASBESTOS CONTAINING MATERIAL (ACM) MAY BE CONCEALED BY EXISTING CONSTRUCTION AND MAY HAVE NOT BEEN TESTED. ADVISE THE CONTRACTING OFFICER OF ANY SUSPECTED ACM NOT IDENTIFIED IN THE SURVEY PROVIDED.

R REMOVE EXIST. FIRE ALARM AND DETECTION SYSTEMS. SALVAGE FIRE ALARM PANELS, TRANSMITTERS, AND ALL FIRE ALARM DEVICES

KEY PLAN

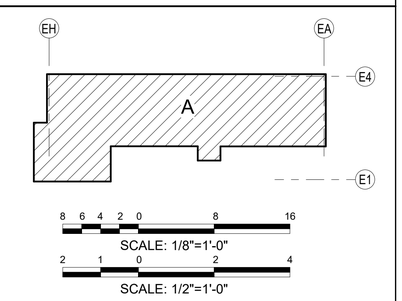

PROJECT NORTH

PLAN NORTH

REGISTERED ARCHITECT RICHARD G. PERRY JR. 16592 STATE OF TEXAS

6.24.2021

US Army Corps of Engineers ®

MARK	DESCRIPTION	DATE

DESIGNED BY: J. PERRY
DRAWN BY: J. MCKINNEY
CHECKED BY: N. CARRUTH
SUBMITTED BY: E. OLMESS
SIZE: ANSI D
ISSUE DATE: JUNE 2022
CONTRACT NO.: W912PP-22-R-0021
FILENAME: K408923-AD110

US ARMY CORPS OF ENGINEERS
ALBUQUERQUE
ALBUQUERQUE, NEW MEXICO

JACOBS
JACOBS ENGINEERING GROUP INC.
777 Main Street
Fort Worth, Texas 76102

COMBAT RESCUE HELICOPTER SIMULATOR FACILITY
KIRTLAND AIR FORCE BASE (AFB)
BERNALILLO COUNTY, NEW MEXICO

PARTIAL RENOVATION BUILDING 923
DEMOLITION FLOOR PLAN

SHEET ID
923
AD110

READY TO ADVERTISE

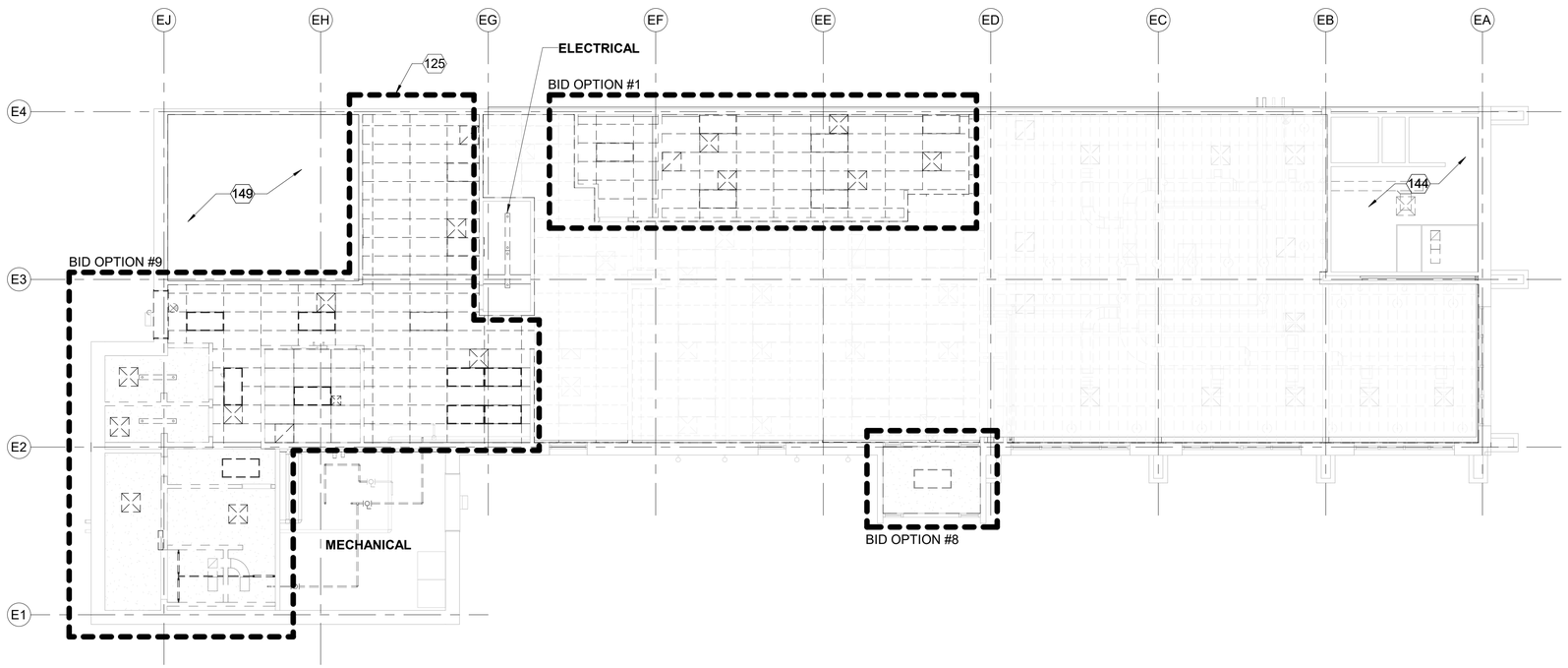

D1 REFLECTED CEILING DEMOLITION PLAN - BID OPTIONS

1/8" = 1'-0"

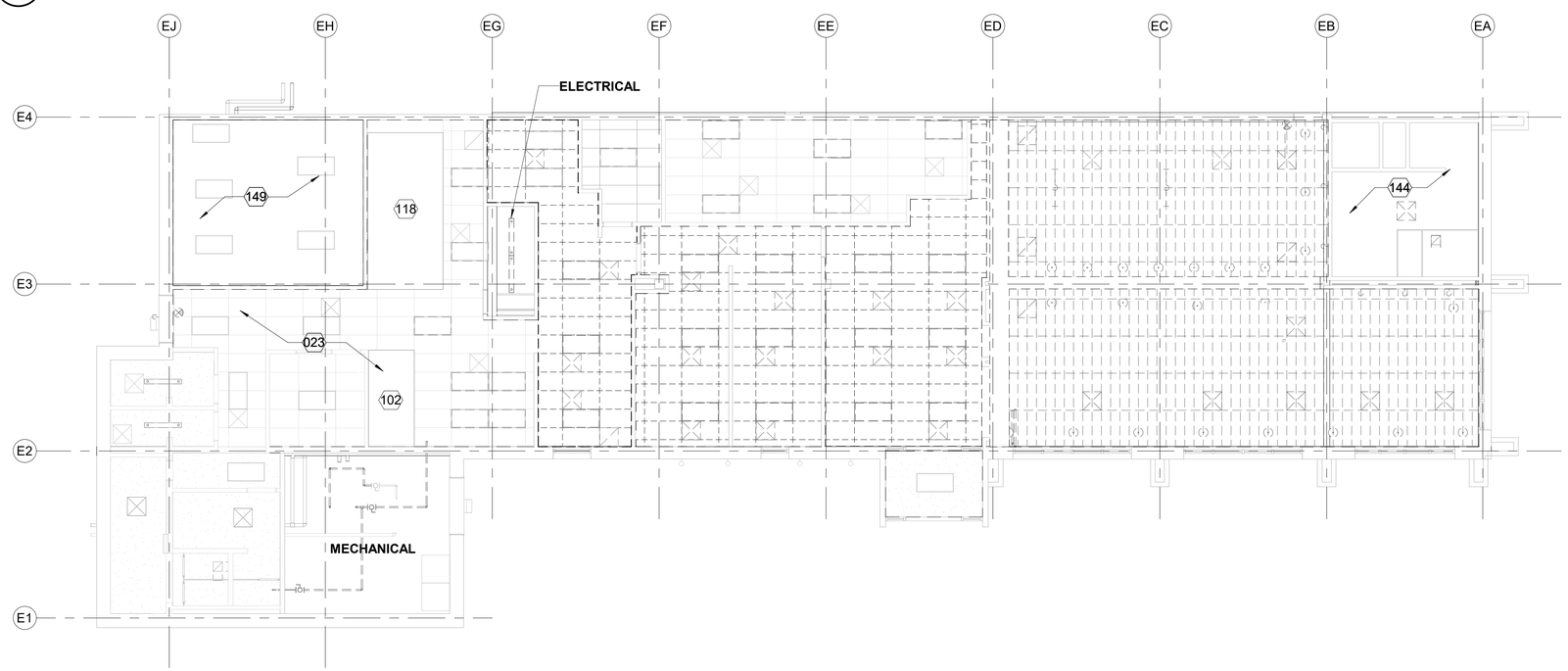

A1 REFLECTED CEILING DEMOLITION PLAN - BASE BID

1/8" = 1'-0"

GENERAL DEMOLITION NOTES - RCP

A REMOVE ALL CEILINGS AND SUPPORT SYSTEMS. REMOVE ALL ABANDONED CEILING SYSTEMS AND THEIR SUPPORTS INCLUDING, BUT NOT LIMITED TO; HARDWARE, GLUE, WOOD, AND FINISHES. PROVIDE A CLEAN SPACE TO INITIATE NEW CONSTRUCTIONS.

B REPAIR AND FINISH ALL HOLES LEFT FROM REMOVAL OF HARDWARE, FASTENERS, DUCTS, PIPES, CONDUIT, AND OTHER EQUIPMENT, AND RESTORE WALLS TO ORIGINAL INTEGRITY

C REFER TO MECHANICAL, ELECTRICAL, AND PLUMBING FOR REMOVAL OF SYSTEMS.

D ALL SIGNAGE TO BE REMOVED.

KEYNOTES

023	REFER TO MECHANICAL, PLUMBING, ELECTRICAL, AND TELECOM FOR ABOVE CEILING EQUIPMENT REMOVAL. DEMO CEILINGS FOR REMOVAL OF EQUIPMENT AS REQUIRED.
102	EXISTING EQUIPMENT
118	EXISTING FLOOR TO CEILING WALK-IN FREEZER
125	DASHED AREA INDICATES EXTENT OF BID OPTION #7
144	EXISTING RESTROOM; TO REMAIN IN EXISTING CONDITION
149	ADJACENT TENANT; NOT IN SCOPE

DEMOLITION LEGEND

EXISTING CEILING TO BE REMOVED

EXISTING CEILING TO REMAIN

KEY PLAN

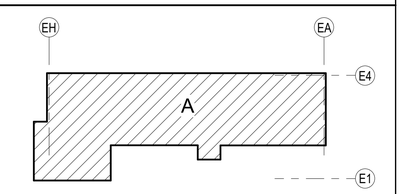

GRAPHIC SCALE

8 0 8 16

Scale: 1/8 INCH = 1 FOOT

PROJECT NORTH

PLAN NORTH

REGISTERED ARCHITECT
RICHARD G. PERRY JR.
76592
STATE OF TEXAS
6.24.2021

US Army Corps of Engineers ®

MARK	DESCRIPTION	DATE

ISSUE DATE: JUNE 2022
CONTRACT NO.: W912PP-22-R-0021

DESIGNED BY: J. PERRY
DRAWN BY: J. MCKINNEY
CHECKED BY: N. CARRUTH
SUBMITTED BY: E. OLNESS
SIZE: ANSI D
FILENAME: KA69-923-AD111

US ARMY CORPS OF ENGINEERS
ALBUQUERQUE
ALBUQUERQUE, NEW MEXICO

JACOBS
JACOBS ENGINEERING GROUP INC.
777 Main Street
Fort Worth, Texas 76102

COMBAT RESCUE HELICOPTER SIMULATOR FACILITY
KIRTLAND AIR FORCE BASE (AFB),
BERNALILLO COUNTY, NEW MEXICO

PARTIAL RENOVATION BUILDING 923
CEILING DEMOLITION PLAN

SHEET ID
923
AD111

READY TO ADVERTISE

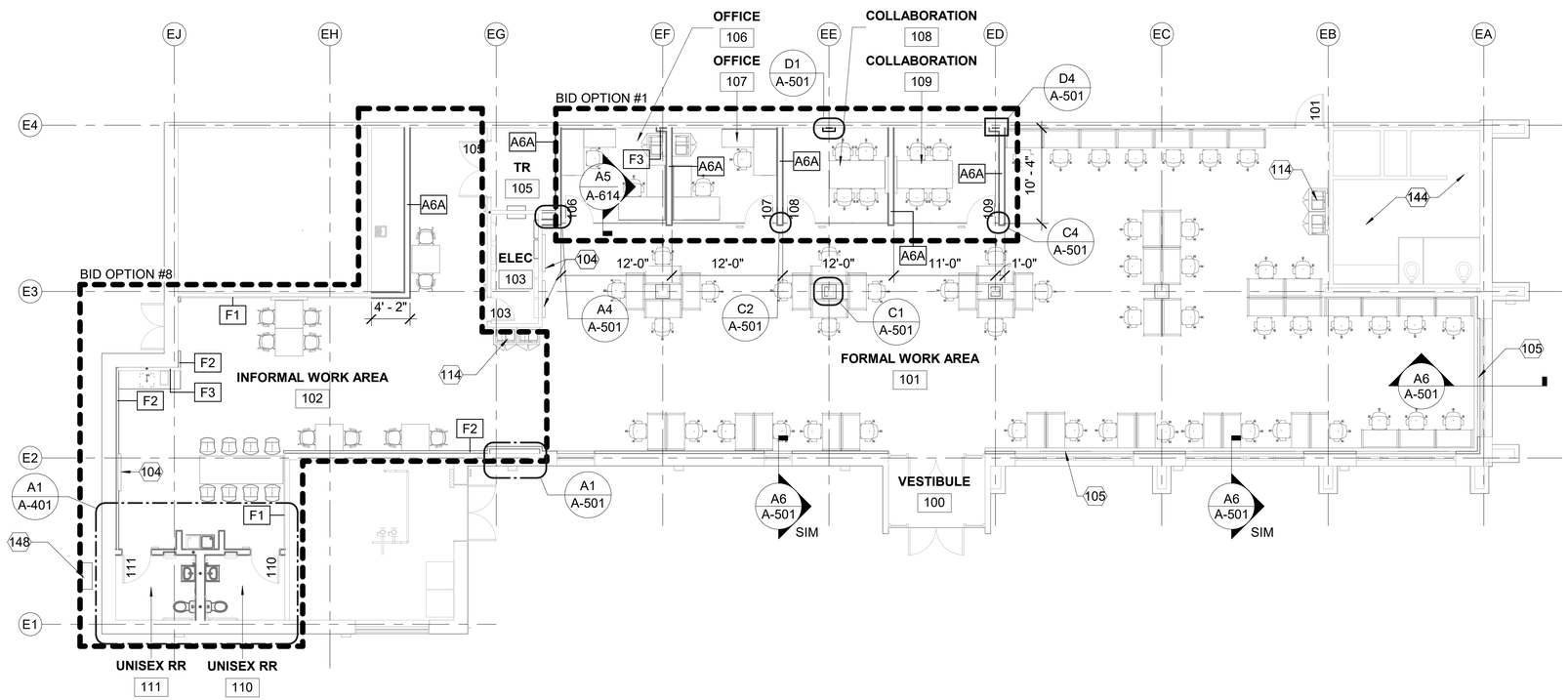

D1 FIRST FLOOR PLAN - BID OPTIONS
1/8" = 1'-0"

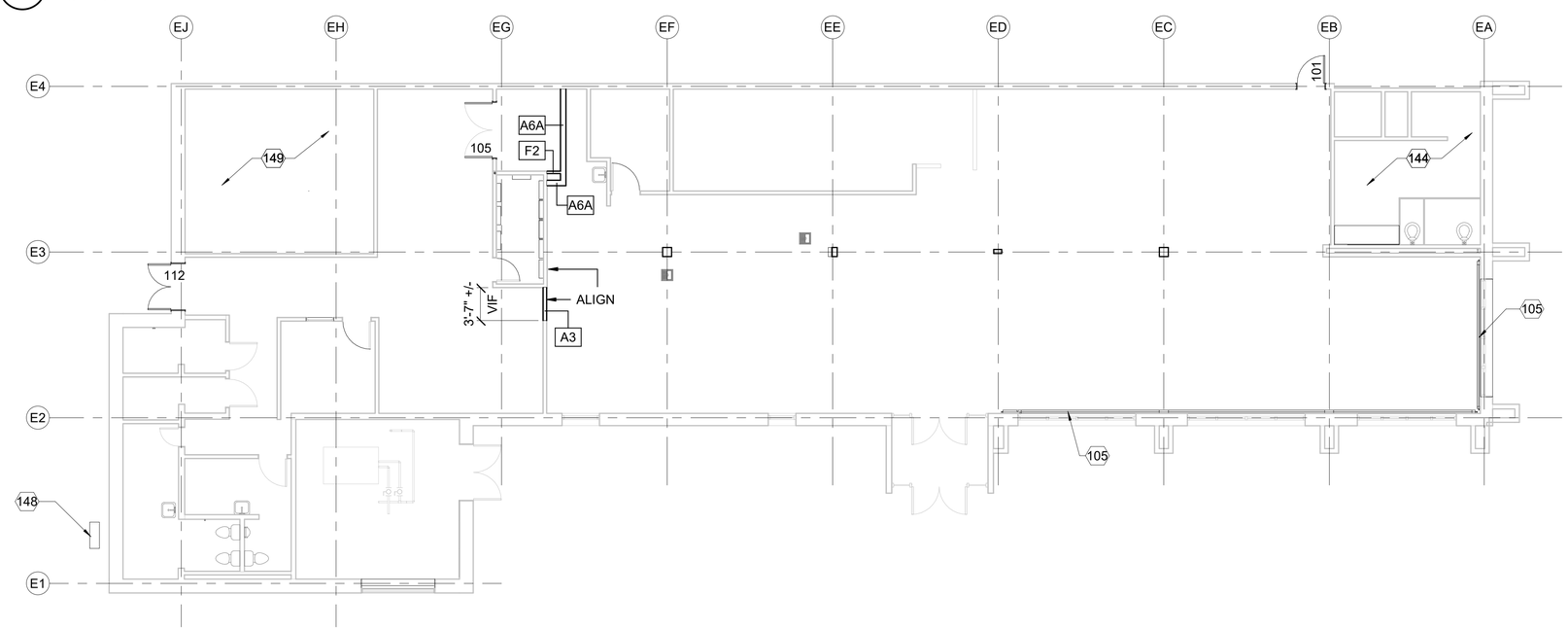

A1 FIRST FLOOR PLAN - BASE BID
1/8" = 1'-0"

GENERAL NOTES - OVERALL PLAN

A	REFER TO AC110 FOR REFLECTED CEILING PLANS
B	REFER TO A-601 FOR PARTITION TYPES
C	REFER TO IN110 FOR FINISH PLANS, IF110 FOR FURNITURE PLANS. REFER TO I-610 FOR FINISH SCHEDULE

KEYNOTES

104	WALL MOUNTED MONITOR, REFER INTERIORS
105	FLOOR MOUNTED RADIATOR, REFER MECHANICAL
114	FURNITURE LAYOUT; REFER INTERIORS
144	EXISTING RESTROOM; TO REMAIN IN EXISTING CONDITION
148	CONDENSING UNIT; REFER MECHANICAL
149	ADJACENT TENANT; NOT IN SCOPE

PLAN LEGEND

EXISTING WALL TO REMAIN

NEW WALL - REFER A-601 FOR PARTITION TYPES

KEY PLAN

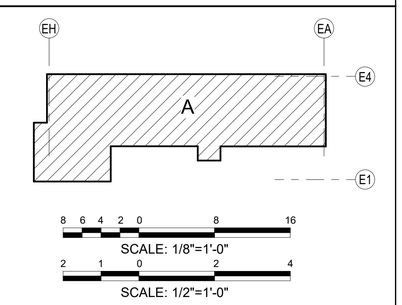

PROJECT NORTH

PLAN NORTH

REGISTERED ARCHITECT RICHARD G. PERRY III 16592 STATE OF TEXAS
6.24.2021

US Army Corps of Engineers ®

MARK	DESCRIPTION	DATE

DESIGNED BY: J. PERRY
DRAWN BY: J. MCKINNEY
CHECKED BY: N. CARRUTH
SUBMITTED BY: E. OLMESS
SIZE: ANSI D
ISSUE DATE: JUNE 2022
CONTRACT NO.: W912PP-22-R-0021
FILENAME: KA69-923-AE110

US ARMY CORPS OF ENGINEERS
ALBUQUERQUE
ALBUQUERQUE, NEW MEXICO

JACOBS
JACOBS ENGINEERING GROUP INC.
777 Main Street
Fort Worth, Texas 76102

COMBAT RESCUE HELICOPTER SIMULATOR FACILITY
KIRTLAND AIR FORCE BASE (AFB)
BERNALILLO COUNTY, NEW MEXICO

PARTIAL RENOVATION BUILDING 923
FLOOR PLAN - LEVEL 1

SHEET ID
923
AE110

READY TO ADVERTISE

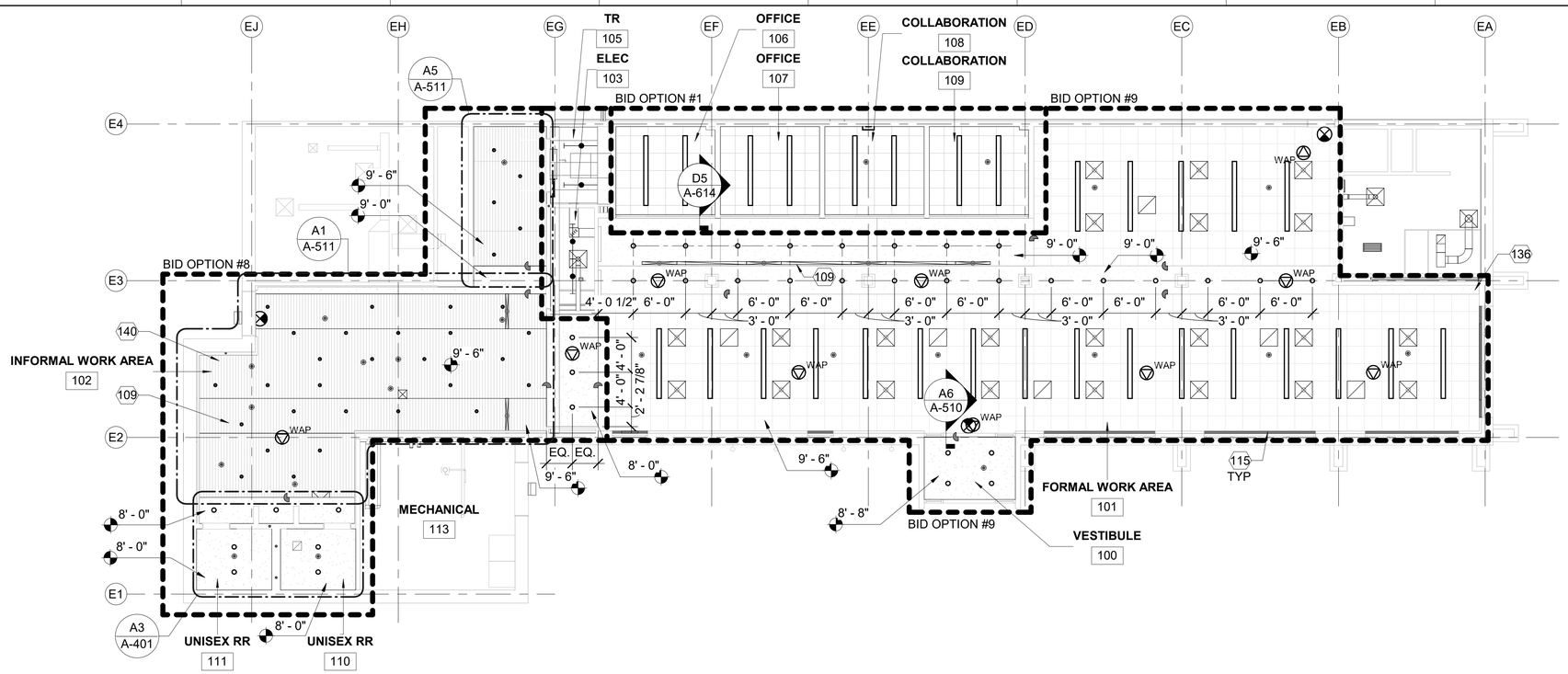

D1 REFLECTED CEILING PLAN - BID OPTIONS

1/8" = 1'-0"

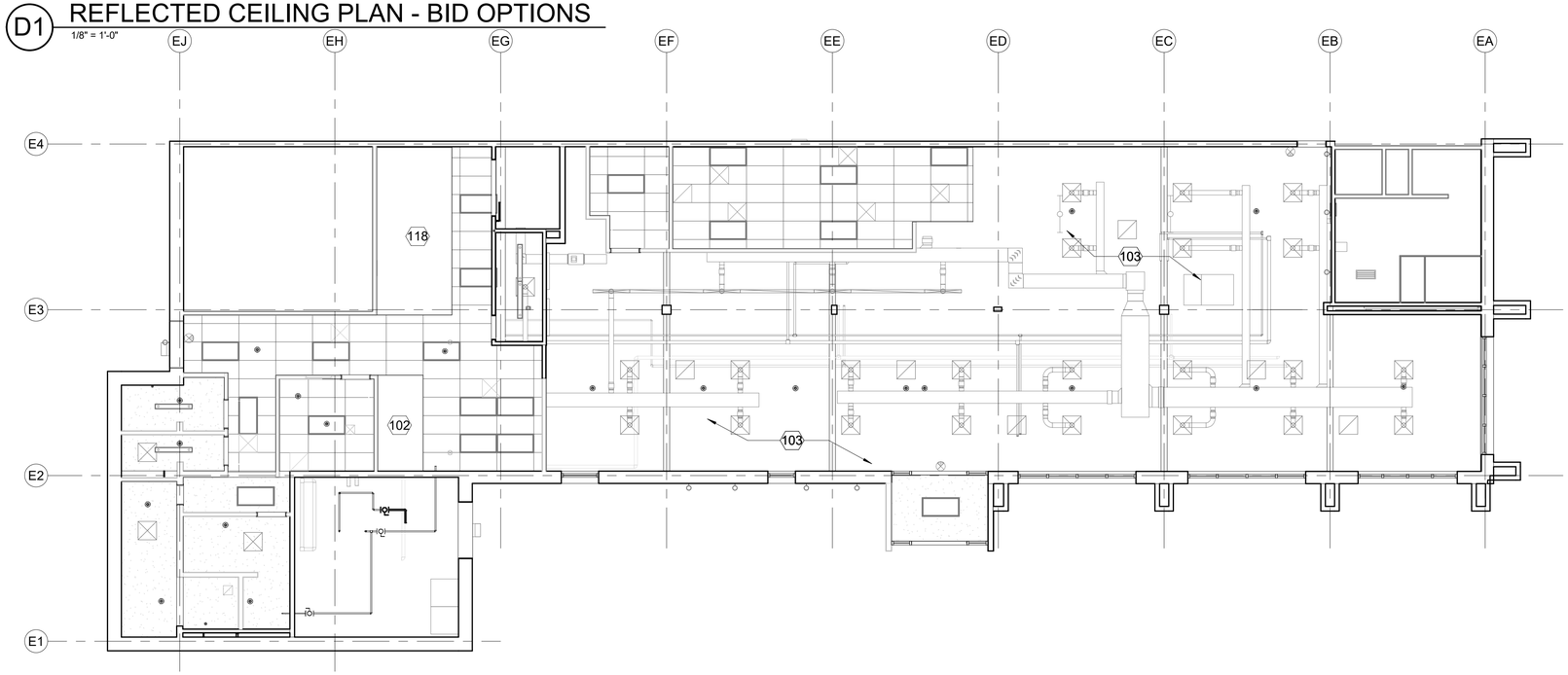

A1 REFLECTED CEILING PLAN - BASE BID

1/8" = 1'-0"

GENERAL NOTES - REFLECTED CEILING PLANS

A	REFER TO AE110 FOR FLOOR PLANS
B	REFER TO A-601 FOR PARTITION TYPES
C	REFER TO IN110 FOR FINISH PLANS. REFER TO I-610 FOR FINISH SCHEDULE
D	ALL GYPSUM BOARD AND ACOUSTICAL CEILINGS TO BE 9' - 0" ABOVE FINISH FLOOR UNLESS OTHERWISE NOTED
E	PROVIDE HOLD-DOWN CLIPS AT ALL ACOUSTICAL CEILING TILE WITHIN 10'-0" OF AN EXTERIOR DOOR
F	AT CONDITIONS WHERE LIGHTS, SPRINKLERS, OR OTHER DEVICES ARE COINCIDENT ON PLAN, FIXTURES ARE AT DIFFERENT LOCATIONS. REFER TO ELECTRICAL AND FIRE PROTECTION FOR FIXTURE MOUNTING HEIGHTS

KEYNOTES

102	EXISTING EQUIPMENT
103	OPEN TO STRUCTURE
109	LINEAR SLOT DIFFUSER; REFER MECHANICAL
115	ROLLER SHADE; REFER TO SHEET A-510 FOR SECTION; REFER TO INTERIORS FOR PRODUCT INFORMATION
118	EXISTING FLOOR TO CEILING WALK-IN FREEZER
136	GYPSUM BOARD CEILING
140	WOOD SLAT CEILING

REFLECTED CEILING PLAN LEGEND

- GYPSUM BOARD CEILING AS SCHEDULED CONTROL JOINT
- 2'x2' ACOUSTICAL CEILING TILE AS SCHEDULED CENTERED IN SPACE AS INDICATED
- 1'-0" x 8'-0" x 2-3/4" WOOD SLAT GRILLE; REFER TO SHEET A-510 FOR DETAILS
- SMOKE DETECTORS, AND SPEAKER STROBES; REFER TO FIRE PROTECTION DRAWINGS.
- RECESSED LIGHT FIXTURE; REFER TO ELECTRICAL DRAWINGS.
- PENDANT LIGHT FIXTURE; REFER TO ELECTRICAL DRAWINGS.
- EXIT LIGHT FIXTURE; REFER TO ELECTRICAL DRAWINGS.
- SUPPLY AIR DIFFUSERS; REFER TO MECHANICAL DRAWINGS.
- RETURN AIR GRILLE; REFER TO MECHANICAL DRAWINGS.
- 2' x 2' DAMPER ACCESS PANEL; REFER TO MECHANICAL FOR DAMPER LOCATIONS.
- CEILING TRANSITION; REFER TO SHEET A-510 FOR TYPICAL DETAILS.
- ROLLER SHADE; REFER TO SHEET A-510 FOR SECTION; REFER TO INTERIORS FOR PRODUCT INFORMATION

KEY PLAN

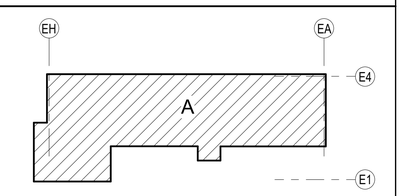

GRAPHIC SCALE

8 0 8 16

Scale: 1/8 INCH = 1 FOOT

PROJECT NORTH

PLAN NORTH

REGISTERED ARCHITECT
RICHARD G. PERRY JR
16592
STATE OF TEXAS
6.24.2021

US Army Corps of Engineers ®

MARK	DESCRIPTION	DATE

ISSUE DATE: JUNE 2022
CONTRACT NO.: W912PP-22-R-0021

DESIGNED BY: J. PERRY
DRAWN BY: J. MCKINNEY
CHECKED BY: N. CARRUTH
SUBMITTED BY: E. OLNESS
SIZE: ANSI D
FILENAME: KA69-923-AC110

US ARMY CORPS OF ENGINEERS
ALBUQUERQUE
ALBUQUERQUE, NEW MEXICO

JACOBS
JACOBS ENGINEERING GROUP INC.
777 Main Street
Fort Worth, Tx 76102

COMBAT RESCUE HELICOPTER SIMULATOR FACILITY
KIRTLAND AIR FORCE BASE (AFB)
BERNALILLO COUNTY, NEW MEXICO

PARTIAL RENOVATION BUILDING 923
REFLECTED CEILING PLAN

SHEET ID
923
AC110

READY TO ADVERTISE

PLUMBING SYSTEMS
(TABLE 2902.1 - IBC AS MODIFIED BY UFC 3 - 420 - 01)

BASE BID - 29 OCCUPANTS WITH 50/50 SPLIT; 15 MALES, 15 FEMALES

B OCCUPANCY

BASE BID FIXTURES	MINIMUM NUMBER REQUIRED		NEW FIXTURES PROVIDED		EXISTING	
	MALE	FEMALE	MALE	FEMALE	MALE	FEMALE
WATER CLOSETS (1 PER 20, UP TO 100; THEN 1 PER 40)	1	1	0	0	2	2
LAVATORIES (1 PER 20, UP TO 100; THEN 1 PER 45)	1	1	0	0	2	2
SHOWERS	-	-	-	-	-	-
URINALS	-		-		1	
DRINKING FOUNTAINS (1 PER 75)	1		-		1	
SERVICE SINK (1 PER FLOOR)	1		-		1	

TOTAL RENOVATION - 59 OCCUPANTS WITH 50/50 SPLIT; 30 MALES, 30 FEMALES

B OCCUPANCY

BASE BID FIXTURES	MINIMUM NUMBER REQUIRED		NEW FIXTURES PROVIDED		EXISTING	
	MALE	FEMALE	MALE	FEMALE	MALE	FEMALE
WATER CLOSETS (1 PER 20, UP TO 100; THEN 1 PER 40)	2	2	1	1	2	2
LAVATORIES (1 PER 20, UP TO 100; THEN 1 PER 45)	2	2	1	1	2	2
SHOWERS	-	-	-	-	-	-
URINALS	-		-		1	
DRINKING FOUNTAINS (1 PER 75)	1		-		1	
SERVICE SINK (1 PER FLOOR)	1		-		1	

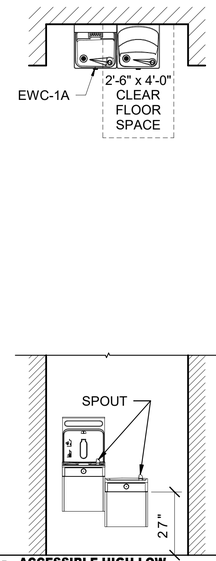

C1 ACCESSIBLE HIGH-LOW ELECTRIC WATER COOLER

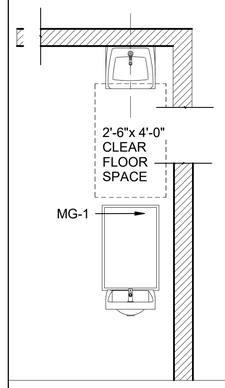

L- 1 ACCESSIBLE COUNTER MOUNTED LAVATORY

MG - 1 MIRROR WITH STAINLESS STEEL FRAME

L1 ACCESSIBLE MULTIPLE COUNTER MOUNTED LAVATORIES

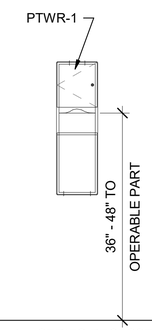

PTWR - 1 SERIES RECESSED PAPER TOWEL DISPENSER AND WASTE RECEPTACLE

MISCELLANIOUS TOILET ROOM MOUNTING HEIGHTS

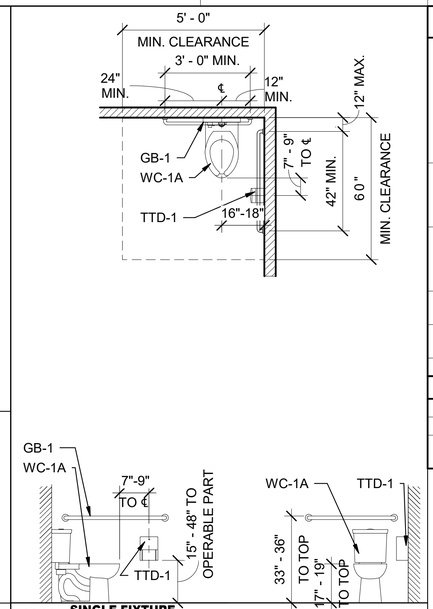

S3 SINGLE FIXTURE ACCESSIBLE RESTROOM

GENERAL NOTES - TOILET PLANS

A	PROVIDE 5/8" CEMENT BOARD AT ALL TILED WET WALL LOCATIONS IN RESTROOMS AND LOCKER ROOMS. PROVIDE 5/8" WATER RESISTANT GYP. BOARD AT ALL PAINTED WALL AND CEILING LOCATIONS IN RESTROOMS, LOCKER ROOMS, AND JANITOR'S CLOSETS, AND WITHIN 4'-0" OF WATER FOUNTAIN LOCATIONS. REFER TO INTERIORS FINISH SCHEDULE SHEET I-610 FOR TILE WALL LOCATIONS.
B	MANUFACTURER PRODUCTS INDICATED ESTABLISHES A MINIMUM LEVEL OF ACCEPTABLE QUALITY. IT IS NOT INTENDED TO LIMIT THE SELECTION OF APPROVED EQUIVALENT PRODUCTS.
C	PROVIDE CONCEALED WOOD BLOCKING BETWEEN STEEL STUDS AT ALL WALL MOUNTED EQUIPMENT AND TOILET PARTITION BRACKET LOCATIONS. VERIFY LOCATIONS WITH SHOP DRAWINGS.
D	REFER TO PLAN FOR QUANTITIES AND ORIENTATION OF TOILET PARTITIONS AND ACCESSORIES.
E	ALL CEILINGS ARE AT 9'-0" A.F.F. UNLESS OTHERWISE NOTED
F	REFFER TO INTERIORS FOR ALL FINISHES

KEYNOTES

136	GYPSUM BOARD CEILING
157	ADA COMPLIANT GRAB BAR
161	HI-LOW WALL MOUNTED WATER COOLER WITH BOTTLE FILLER, REFER PLUMBING

REFLECTED CEILING PLAN LEGEND

- GYPSUM BOARD CEILING AS SCHEDULED
- CONTROL JOINT
- 2'x2' ACOUSTICAL CEILING TILE AS SCHEDULED CENTERED IN SPACE AS INDICATED
- 1'-0" x 8'-0" x 2-3/4" WOOD SLAT GRILLE; REFER TO SHEET A-510 FOR DETAILS
- SMOKE DETECTORS, AND SPEAKER STROBES; REFER TO FIRE PROTECTION DRAWINGS.
- RECESSED LIGHT FIXTURE; REFER TO ELECTRICAL DRAWINGS.
- PENDANT LIGHT FIXTURE; REFER TO ELECTRICAL DRAWINGS.
- EXIT LIGHT FIXTURE; REFER TO ELECTRICAL DRAWINGS.
- SUPPLY AIR DIFFUSERS; REFER TO MECHANICAL DRAWINGS.
- RETURN AIR GRILLE; REFER TO MECHANICAL DRAWINGS.
- 2' x 2' DAMPER ACCESS PANEL; REFER TO MECHANICAL FOR DAMPER LOCATIONS.
- CEILING TRANSITION; REFER TO SHEET A-510 FOR TYPICAL DETAILS.
- ROLLER SHADE; REFER TO SHEET A-510 FOR SECTION; REFER TO INTERIORS FOR PRODUCT INFORMATION

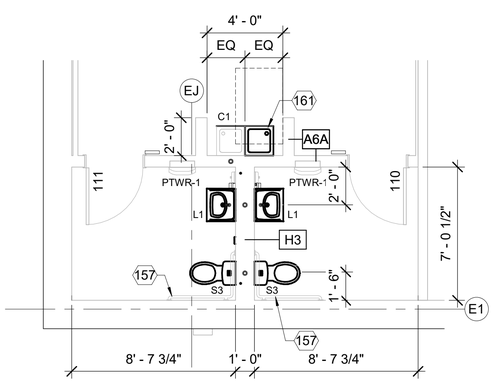

A1 ENLARGED RR PLANS - BID OPTION #8
1/4" = 1'-0"

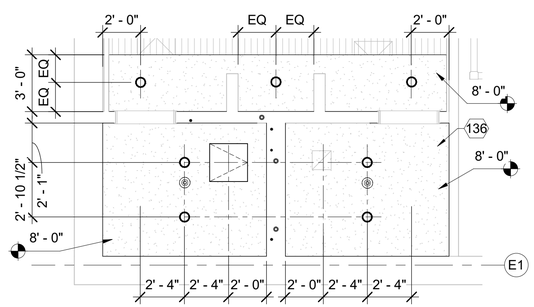

A3 ENLARGED RR RCP - BID OPTION #8
1/4" = 1'-0"

GRAPHIC SCALE

4 0 4 8

Scale: 1/4 INCH = 1 FOOT

PROJECT NORTH

PLAN NORTH

REGISTERED ARCHITECT RICHARD G. PERRY, JR. STATE OF TEXAS 16592
6.24.2021

US Army Corps of Engineers ®

MARK	DESCRIPTION	DATE

DESIGNED BY: J. PERRY
DRAWN BY: J. MCKINNEY
CHECKED BY: N. CARRUTH
SUBMITTED BY: E. OLMESS
SIZE: ANSI D
ISSUE DATE: JUNE 2022
CONTRACT NO.: W912PP-22-R-0021
FILENAME: KAB9923-A401

US ARMY CORPS OF ENGINEERS
ALBUQUERQUE
ALBUQUERQUE, NEW MEXICO

JACOBS
JACOBS ENGINEERING GROUP INC.
777 Main Street
Fort Worth, TX 76102

COMBAT RESCUE HELICOPTER SIMULATOR FACILITY
KIRTLAND AIR FORCE BASE (AFB),
BERNALILLO COUNTY, NEW MEXICO

PARTIAL RENOVATION BUILDING 923
RESTROOM ACCESSORIES AND ENLARGED RESTROOM PLANS

SHEET ID
923
A-401

READY TO ADVERTISE

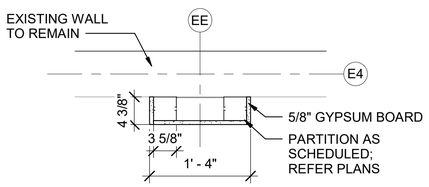

D1 PLAN DETAIL - BID OPTION #1

1" = 1'-0"

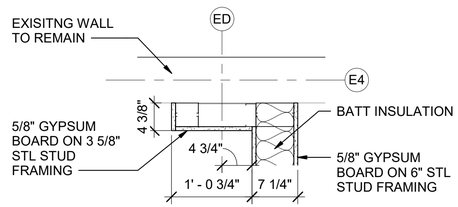

D4 PLAN DETAIL - BID OPTION #1

1" = 1'-0"

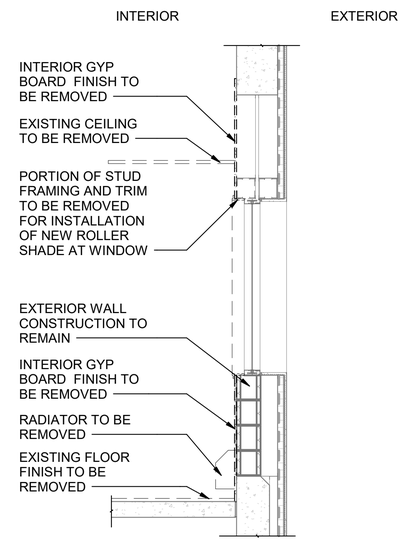

D6 DEMO WALL SECTION - BID OPTION #9

1/2" = 1'-0"

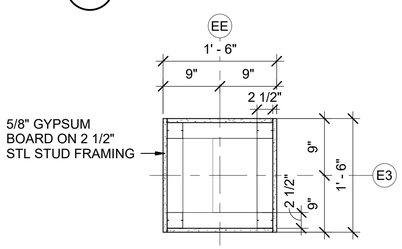

C1 PLAN DETAIL - BID OPTION #9

1" = 1'-0"

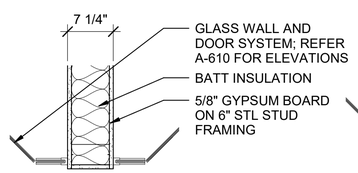

C2 PLAN DETAIL - BID OPTION #1

1" = 1'-0"

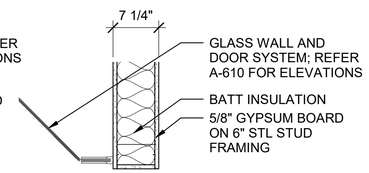

C4 PLAN DETAIL - BID OPTION #1

1" = 1'-0"

A6 EXTERIOR WALL SECTION - BID OPTION #9

1/2" = 1'-0"

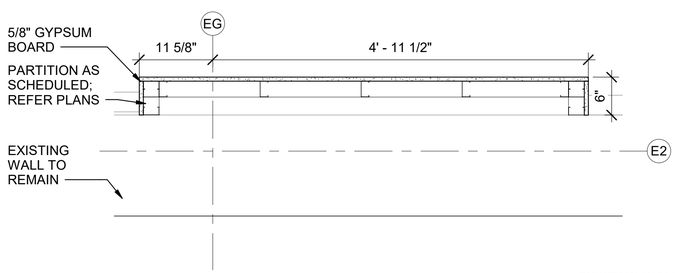

A1 PLAN DETAIL - BID OPTION #8

1" = 1'-0"

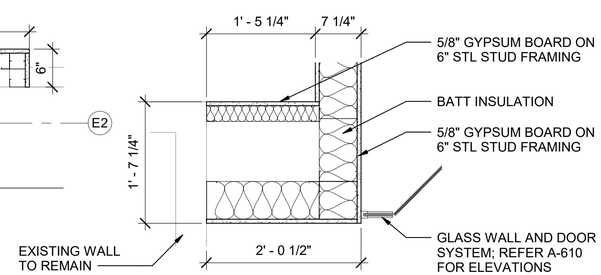

A4 PLAN DETAIL - BID OPTION #1

1" = 1'-0"

GRAPHIC SCALE

2 1 0 2 4

SCALE: 1/2"=1'-0"

1 1/2 0 1 2

SCALE: 1"=1'-0"

REGISTERED ARCHITECT
RICHARD G. PERRY JR.
76592
STATE OF TEXAS
6.24.2021

US Army Corps of Engineers ®

MARK	DESCRIPTION	DATE

DESIGNED BY: J. PERRY
DRAWN BY: J. MCKINNEY
CHECKED BY: N. CARRUTH
SUBMITTED BY: E. OLMESS
SIZE: ANSI D
ISSUE DATE: JUNE 2022
CONTRACT NO.: W912PP-22-R-0021
FILENAME: K408-923-A501

US ARMY CORPS OF ENGINEERS
ALBUQUERQUE
ALBUQUERQUE, NEW MEXICO

JACOBS
JACOBS ENGINEERING GROUP INC.
777 Main Street
Fort Worth, TX 76102

COMBAT RESCUE HELICOPTER SIMULATOR FACILITY
KIRTLAND AIR FORCE BASE (AFB),
BERNALILLO COUNTY, NEW MEXICO

PARTIAL RENOVATION BUILDING 923
PLAN AND SECTION DETAILS

SHEET ID
923
A-501

READY TO ADVERTISE

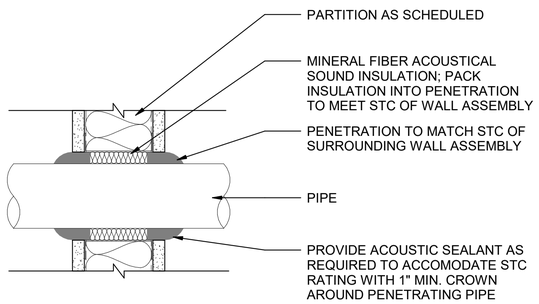

C1 ACOUSTICAL PENETRATION AT WALL
N.T.S.

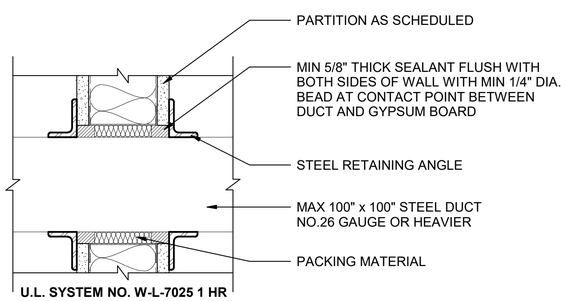

A1 PENETRATION AT DUCT
N.T.S.

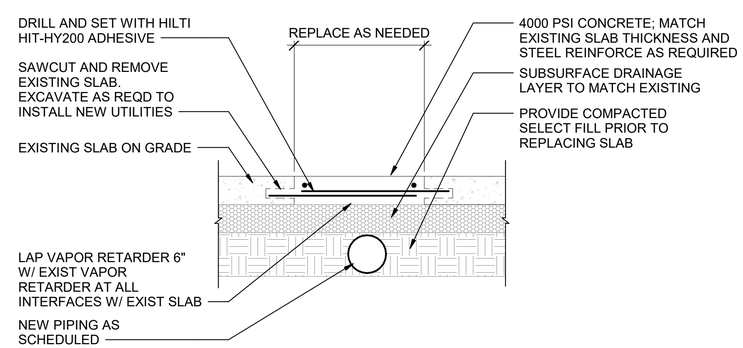

A5 SAWCUT DETAIL
N.T.S.

PROJECT NORTH

PLAN NORTH

REGISTERED ARCHITECT
RICHARD G. PERRY JR.
76592
STATE OF TEXAS
6.24.2021

US Army Corps of Engineers ®

MARK	DESCRIPTION	DATE

ISSUE DATE: JUNE 2022
CONTRACT NO.: W912PP-22-R-0021

DESIGNED BY: J. PERRY
DRAWN BY: J. MCKINNEY
CHECKED BY: N. CARRUTH
SUBMITTED BY: E. OLNESS
SIZE: ANSI D
FILENAME: KA69-9203-A504

US ARMY CORPS OF ENGINEERS
ALBUQUERQUE
ALBUQUERQUE, NEW MEXICO

JACOBS
JACOBS ENGINEERING GROUP INC.
777 Main Street
Fort Worth, Texas 76102

COMBAT RESCUE HELICOPTER SIMULATOR FACILITY
KIRTLAND AIR FORCE BASE (AFB),
BERNALILLO COUNTY, NEW MEXICO

PARTIAL RENOVATION BUILDING 923
PENETRATION DETAILS

SHEET ID
923
A-504

READY TO ADVERTISE

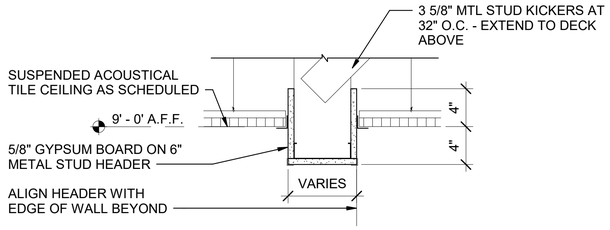

F1 CEILING HEADER DETAIL
1 1/2" = 1'-0"

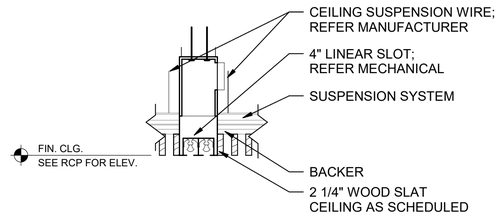

F4 WOOD SLAT AT DIFFUSER - BID OPTION #8
1 1/2" = 1'-0"

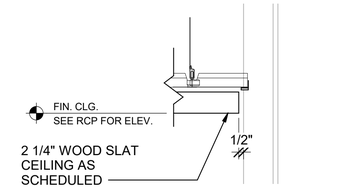

F6 WOOD SLAT CEILING TO WALL - BID OPTION #8
1 1/2" = 1'-0"

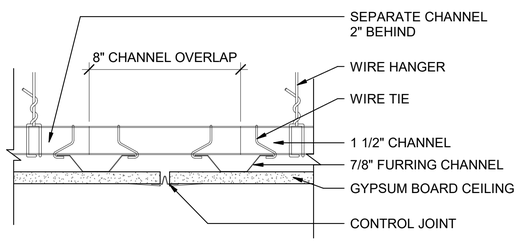

D1 TYP CJ AT GYP BD CEILING
3" = 1'-0"

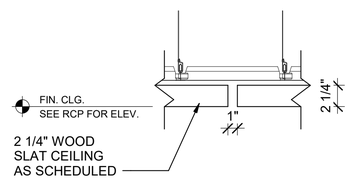

D4 TYP WOOD SLAT JOINT - BID OPTION #8
1 1/2" = 1'-0"

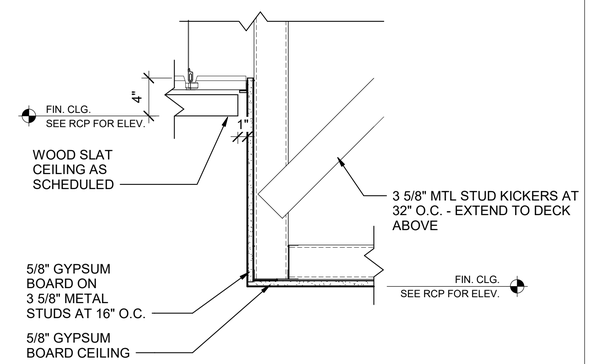

D6 GYP TO WOOD SLAT TRANSITION - BID OPTION #8
1 1/2" = 1'-0"

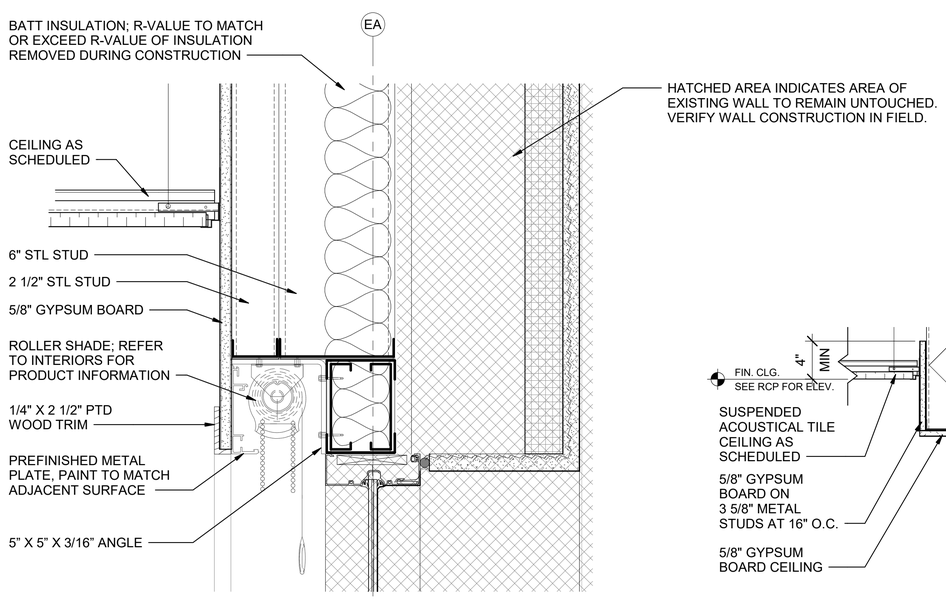

A1 ROLLER SHADE DETAIL - BID OPTION #9
3" = 1'-0"

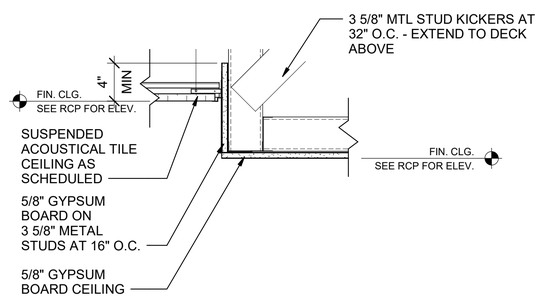

A4 GYP TO ACT TRANSITION
1 1/2" = 1'-0"

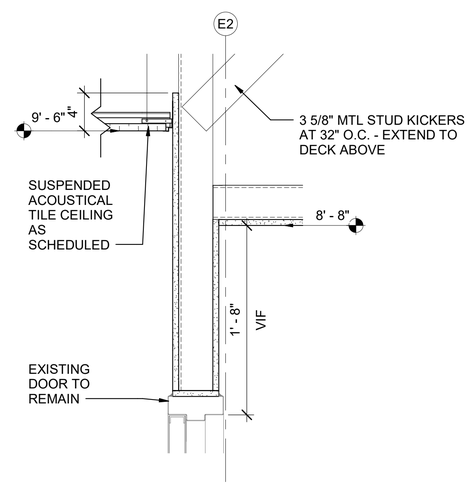

A6 ENTRY DOOR TRANSITION - BASE BID
1 1/2" = 1'-0"

GRAPHIC SCALE

1 0 1
SCALE: 1 1/2"=1'-0"

6 4 2 0 6
SCALE: 3"=1'-0"

REGISTERED ARCHITECT RICHARD G. PERRY III STATE OF TEXAS 16592
6.24.2021

US Army Corps of Engineers ®

MARK	DESCRIPTION	DATE

DESIGNED BY: J. PERRY
DRAWN BY: J. MCKINNEY
CHECKED BY: N. CARRUTH
SUBMITTED BY: E. OLMESS
SIZE: ANSI D
ISSUE DATE: JUNE 2022
CONTRACT NO.: W912PP-22-R-0021
FILENAME: K486923-A510

US ARMY CORPS OF ENGINEERS
ALBUQUERQUE
ALBUQUERQUE, NEW MEXICO

JACOBS
JACOBS ENGINEERING GROUP INC.
777 Main Street
Fort Worth, Texas 76102

COMBAT RESCUE HELICOPTER SIMULATOR FACILITY
KIRTLAND AIR FORCE BASE (AFB)
BERNALILLO COUNTY, NEW MEXICO

PARTIAL RENOVATION BUILDING 923
CEILING DETAILS

SHEET ID
923
A-510

READY TO ADVERTISE

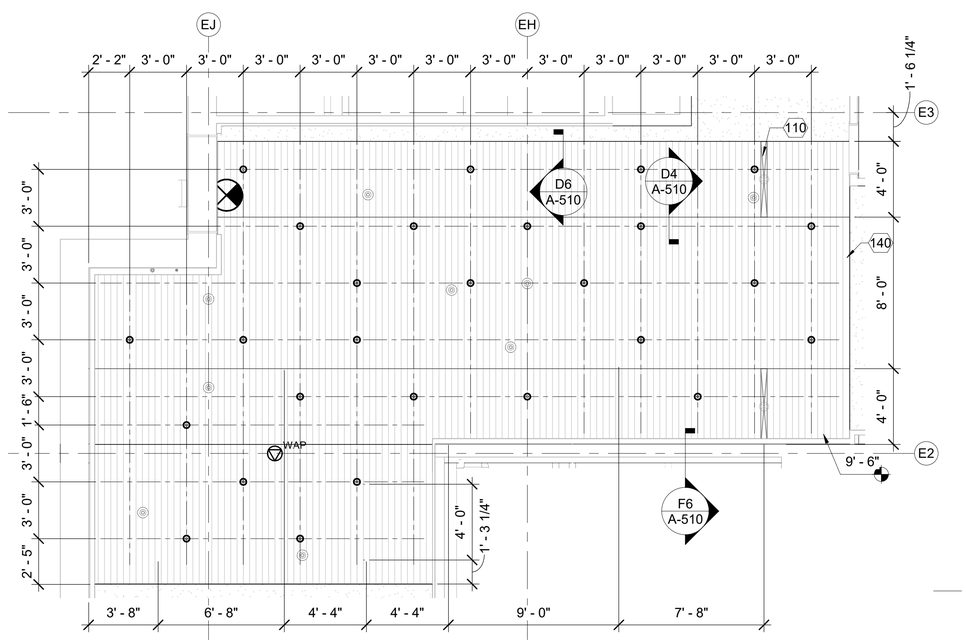

A1 ENLARGED RCP - BID OPTION #8

1/4" = 1'-0"

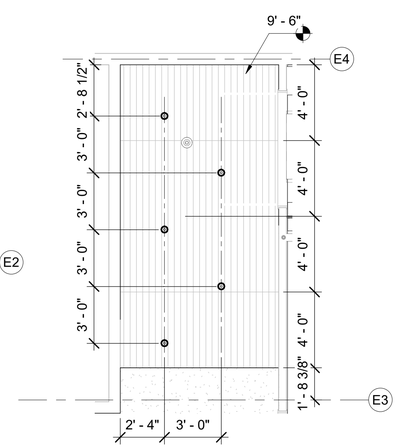

A5 ENLARGED RCP - BID OPTION #8

1/4" = 1'-0"

KEYNOTES

110	MECHANICAL EQUIPMENT; REFER MECHANICAL
140	WOOD SLAT CEILING

GRAPHIC SCALE

4 0 4 8

Scale: 1/4 INCH = 1 FOOT

PROJECT NORTH

PLAN NORTH

REGISTERED ARCHITECT RICHARD G. PERRY JR. 16592 STATE OF TEXAS

6.24.2021

US Army Corps of Engineers ®

MARK	DESCRIPTION	DATE

DESIGNED BY: J. PERRY
DRAWN BY: J. MCKINNEY
CHECKED BY: N. CARRUTH
SUBMITTED BY: E. OLMESS
SIZE: ANSI D
FILENAME: K486923-A511
ISSUE DATE: JUNE 2022
CONTRACT NO.: W912PP-22-R-0021

US ARMY CORPS OF ENGINEERS
ALBUQUERQUE
ALBUQUERQUE, NEW MEXICO

JACOBS
JACOBS ENGINEERING GROUP INC.
777 Main Street
Fort Worth, Texas 76102

COMBAT RESCUE HELICOPTER SIMULATOR FACILITY
KIRTLAND AIR FORCE BASE (AFB),
BERNALILLO COUNTY, NEW MEXICO

PARTIAL RENOVATION BUILDING 923

ENLARGED REFLECTED CEILING PLANS

SHEET ID
923
A-511

READY TO ADVERTISE

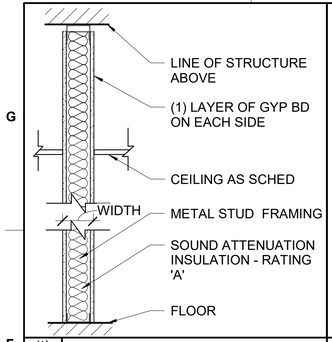

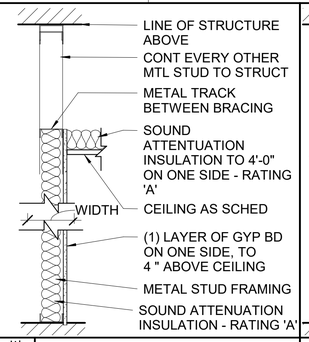

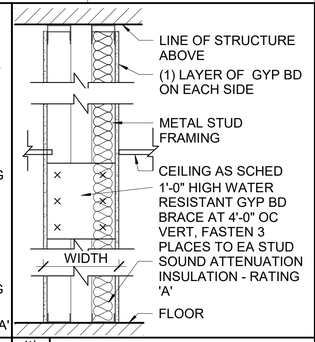

TYPE	A		
SIZE INDICATOR	IND	STUD SIZE	TOTAL WIDTH
	2	2 1/2"	3 3/4"
	3	3 5/8"	4 7/8"
	4	4"	5 1/4"
	6	6"	7 1/4"
	8	8"	9 1/4"
RATING		NO RATING - NO INSULATION	
	1	1 HR FIRE RATED - UL# U419	
	A	ACOUSTICAL - STC 45	

TYPE	F		
SIZE INDICATOR	IND	STUD SIZE	TOTAL WIDTH
	1	7/8"	1 1/2"
	2	2 1/2"	3 1/8"
	3	3 5/8"	4 1/4"
	4	4"	4 5/8"
	6	6"	6 5/8"
RATING		NO RATING - NO INSULATION	
	A	ACOUSTICAL	

TYPE	H		
SIZE INDICATOR	IND	STUD SIZE	TOTAL WIDTH
	3	3 5/8"	1'-0"
	4	3 5/8"	1'-4"
	6	3 5/8"	1'-7"
RATING		NO RATING - NO INSULATION	
	A	ACOUSTICAL	

DO NOT ATTACH GYP BD OR STUDS TO TOP TRACK

PROVIDE UL SYSTEMS HW-D-0042 AT ALL 1 HR RATED PARTITIONS

REFER TO GENERAL NOTES FOR SEALANT AND INSULATION TYPES

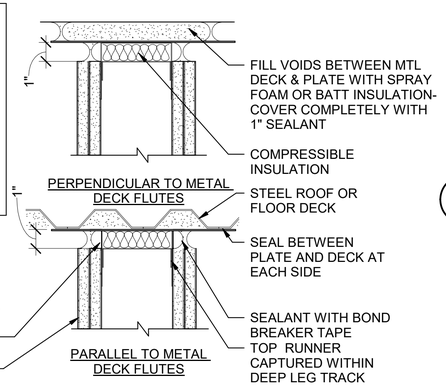

A1 TYP TOP OF GYP BD WALL CONX
3" = 1'-0"

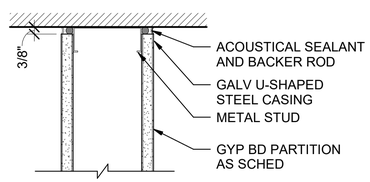

B3 TYP WALL-WALL CONNECTION
3" = 1'-0"

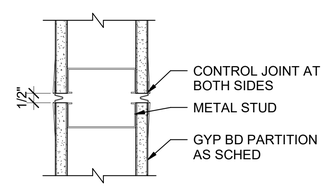

B5 TYP CONTROL JOINT
3" = 1'-0"

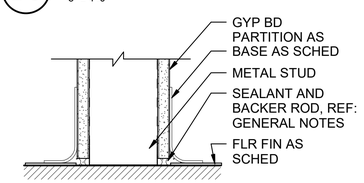

A3 TYP BOTTOM OF WALL CONNECTION
3" = 1'-0"

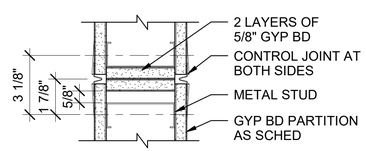

A5 TYP 1 HR RATED CONTROL JOINT
3" = 1'-0"

PARTITION TYPES

FIRST DIGIT IS THE PARTITION 'TYPE'

A3-2

SECOND DIGIT IS THE 'SIZE INDICATOR'

THIRD DIGIT IS THE PARTITION 'RATING'

GENERAL SHEET NOTES

A. NOT ALL PARTITIONS ILLUSTRATED ARE USED. REFER TO SCHEDULE BELOW "GYP BD PARTITIONS IN PROJECT" FOR TYPES USED.

B. "LINE OF STRUCTURE" INDICATED FOR EACH PARTITION IS DIAGRAMMATIC ONLY AND DOES NOT INDICATE EXACT CONSTRUCTION CONDITIONS OR GEOMETRY. REFER TO DETAILS ON THIS SHEET FOR TYPICAL CONNECTION DETAILS.

C. DO NOT ATTACH METAL STUD TO THE TOP SLIP TRACK.

D. GYPSUM BOARD:
1. FIRE RESISTANT RATED PARTITIONS SHALL USE TYPE "X" FIRE RATED GYPSUM BOARD.
2. PARTITIONS IN HIGH MOISTURE AREAS SHALL USE MOISTURE RESISTANT GYPSUM BOARD WHICH INCLUDE TOILET ROOM(S), LOCKER ROOM(S),JANITOR CLOSET(S) AND WITHIN 4'-0" OF WATER FOUNTAIN.
3. PARTITIONS BEHIND TOILETS, FIXTURES AND WITHIN SHOWER AREAS SHALL USE CEMENT BOARD WITH A MOISTURE BARRIER.
4. DO NOT ATTACH GYPSUM BOARD TO THE TOP SLIP TRACK.

E. SEALANT:
1. FIRE RESISTANT RATED PARTITIONS SHALL USE FIRE STOP SEALANT SYSTEM.
2. NON - RATED PARTITIONS AND SMOKE RATED PARTITIONS SHALL USE ACOUSTICAL SEALANT.FIRE RESISTANT RATED PARTITIONS SHALL NOT USE ACOUSTICAL SEALANT.

F. INSULATION - HEAD CONDITION AT STRUCTURE ABOVE:
1. FIRE RATED RESISTANT PARTITIONS SHALL USE FIRE SAFING INSULATION.
2. NON - RATED PARTITIONS SHALL USE SOUND ATTENUATION BLANKET.

G. FIRE AND / OR SMOKE RESISTANT RATINGS ARE TO SURROUND ALL OPENINGS IN RATED PARTITIONS.

H. FIRE AND / OR SMOKE RESISTANT PARTITIONS SHALL EXTEND TO INSIDE FACE OF EXTERIOR SHEATHING,INCLUDING EXTENSIONS THROUGH SOFFITS.

I. EACH PARTITION INDICATED TO BE FIRE AND/OR SMOKE RESISTANT SHALL BE IDENTIFIED AS SUCH WITH A LABEL ABOVE THE CEILING ON EACH SEGMENT OF WALL AT 8'-0" ON CENTER OR BY THE AUTHORITY HAVING JURISDICTION. IN AREAS WITH NO CEILINGS, PROVIDE ONE LABEL WITH ARIAL BOLD (BLACK) FONT 2" IN HEIGHT AT 9'-0" AFF CENTERED ON EACH FIRE/SMOKE WALL OF AREA

J. STC RATING IS BASED ON A MIN METAL STUD SIZE OF 3 5/8".

K. INSTALL HORIZONTAL STUD FRAMING BRACING AT 4'- 0" ON CENTER.

L. ALL STUDS ARE MINIMUM 22 GAUGE.

M. REFER TO FLOOR PLANS FOR LOCATION OF PARTITION TYPE TAGS.

N. ALL STUDS ARE 16" ON CENTER UNLESS OTHERWISE NOTED.

GRAPHIC SCALE

6 4 2 0 6

SCALE: 3"=1'-0"

REGISTERED ARCHITECT RICHARD G. PERRY, JR. 76592 STATE OF TEXAS
6.24.2021

US Army Corps of Engineers ®

MARK	DESCRIPTION	DATE

DESIGNED BY: J. PERRY
DRAWN BY: J. MCKINNEY
CHECKED BY: N. CARRUTH
SUBMITTED BY: E. OLMESS
SIZE: ANSI D
FILENAME: KA89923-A601
ISSUE DATE: JUNE 2022
CONTRACT NO.: W912PP-22-R-0021

US ARMY CORPS OF ENGINEERS
ALBUQUERQUE
ALBUQUERQUE, NEW MEXICO

JACOBS
JACOBS ENGINEERING GROUP INC.
777 Main Street
Fort Worth, TX 76102

COMBAT RESCUE HELICOPTER SIMULATOR FACILITY
KIRTLAND AIR FORCE BASE (AFB),
BERNALILLO COUNTY, NEW MEXICO

PARTIAL RENOVATION BUILDING 923
PARTITION TYPES

SHEET ID
923
A-601

READY TO ADVERTISE

DOOR SCHEDULE

		DOOR						FRAME			DETAILS			ASSEMBLY			
		SIZE															
	TYPE	WT	HT	THK	MATL	FIN	GLZ	TYPE	MATL	FIN	HEAD	JAMB	SILL	STC	FIRE RATING	HDWR	REMARKS
100A	PF	6' - 0"	7' - 0"	2 1/4"	-	-	-	B	-	-	-	-	-	-	-		3
100B	PF	6' - 0"	7' - 0"	2 1/4"	-	-	-	B	-	-	-	-	-	-	-		3
101	F	3' - 0"	7' - 0"	1 3/4"	HM	P	-	A	HM	P	-	-	-	-	-		3
103	EXIST	2' - 6"	7' - 0"	1 3/4"	-	-	-	-	-	-	-	-	-	-	-	-	-
105	PF	6' - 0"	7' - 0"	1 3/4"	HM	P	-	B	HM	P	D1/A-614	B1/A-614	A1/A-614	-	-	2	2
106	G	3' - 0"	8' - 11"	3/8"	GLZ	-	3/8" CTLI	C	-	-	-	-	-	35	-	3	2,4
107	G	3' - 0"	8' - 11"	3/8"	GLZ	-	3/8" CTLI	C	-	-	-	-	-	35	-	3	2,4
108	G	3' - 0"	8' - 11"	3/8"	GLZ	-	3/8" CTLI	C	-	-	-	-	-	35	-	3	2,4
109	G	3' - 0"	8' - 11"	3/8"	GLZ	-	3/8" CTLI	C	-	-	-	-	-	35	-	3	2,4
110	F	3' - 0"	7' - 0"	1 3/4"	HM	P	-	A	HM	P	D3/A-614	B3/A-614	A1/A-614	45	-	4	2
111	F	3' - 0"	7' - 0"	1 3/4"	HM	P	-	A	HM	P	D3/A-614	B3/A-614	A1/A-614	45	-	4	2
112	PF	5' - 0"	7' - 0"	1 3/4"	-	-	-	B	-	-	-	-	-	-	-		3

DOOR TYPES

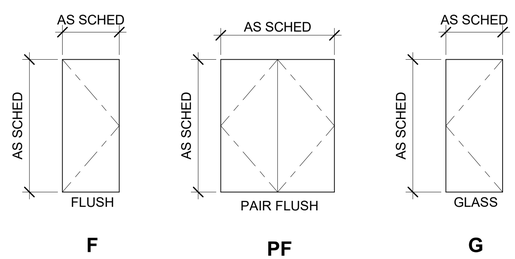

FRAME TYPES

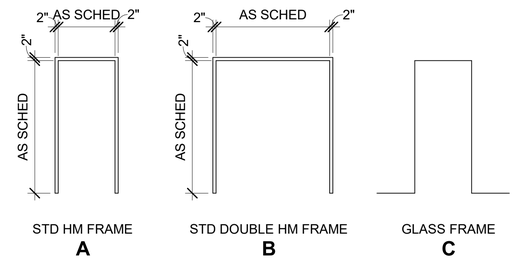

GLAZING SCHEDULE

ABBREVIATION	DESCRIPTION	SPEC.	LOCATION	FINISH	SOURCE (BOD)	COLOR	CAT. NO.	REMARKS
GL-1	SINGLE GLAZED PARTITION SYSTEM	08 41 13	OFFICE AND COLLABORATION SPACES	CLEAR ANODIZED ALUMINUM TRIM	SOLARE	CLEAR	-	3/8" CLEAR TEMPERED GLASS WITH CLEAR ANODIZED ALUMINUM TRIM

GLASS TYPES

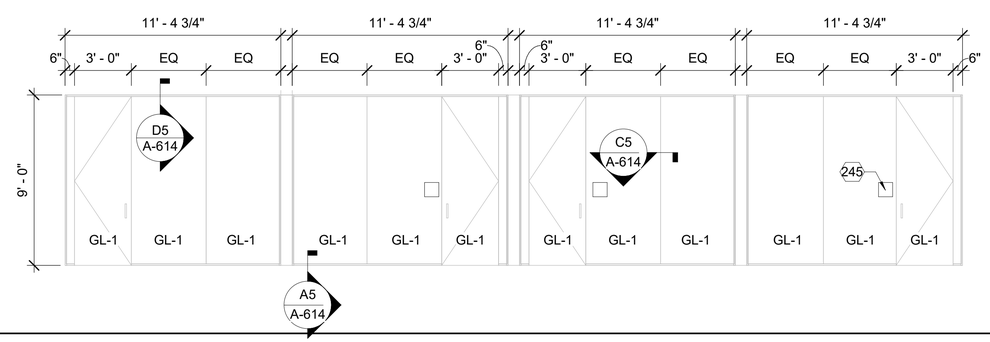

GENERAL NOTES - DOOR SCHEDULE

A	REFER AE101FOR PARTITION LAYOUT AND DIMENSIONS. REFER A-601 FOR PARTITION TYPES AND DETAILS
B	REFER SHEET IN110 FOR SIGNAGE TYPES AND DETAILS

KEYNOTES

245	SIGNAGE; REFER INTERIORS

DOOR SCHEDULE ABBREVIATIONS

3/8" CTLI	3/8" CLEAR TEMPERED, LOW IRON GLAZING
AL	ALUMINUM
AN	ANODIZED
BRG	BLAST RESISTANT, LOW E, TINTED, CLEAR GLAZING
CCR	COILING COUNTER DOOR
CLG	CHAIN LINK GATE
F	FABRIC
FF	FACTORY FINISH
FIN	FINISH
GALV	GALVANIZED
GLZ	GLAZING
HDWR	HARDWARE
HM	HOLLOW METAL
HT	HEIGHT
MATL	MATERIAL
MIN	MINUTE
NO	DOOR NUMBER
P	PAINTED
SS	STAINLESS STEEL
ST	STAINED
STC	SOUND TRANSMISSION CLASS RATING
STL	STEEL
THK	THICKNESS
TLP	TRANSLUCENT PANEL
WD	FSC CERTIFIED WOOD
WM	WIRE MESH
WT	WIDTH

DOOR SCHEDULE REMARKS

1	INSULATED HOLLOW METAL DOORS
2	REFER INTERIORS FOR FLOORING/MATERIAL TRANSITIONS
3	EXISTING DOOR TO REMAIN
4	GLAZED DOOR IN GLAZED WALL SYSTEM; REFER MANUFACTURER FOR DETAILS

GRAPHIC SCALE

4 0 4 8

Scale: 1/4 INCH = 1 FOOT

REGISTERED ARCHITECT
RICHARD G. PERRY JR
STATE OF TEXAS
18592
6.24.2021

US Army Corps of Engineers ®

MARK	DESCRIPTION	DATE

ISSUE DATE: JUNE 2022
CONTRACT NO.: W912PP-22-R-0021

DESIGNED BY: J. PERRY
DRAWN BY: J. MCKINNEY
CHECKED BY: N. CARRUTH
SUBMITTED BY: E. OLMESS
SIZE: ANSI D
FILENAME: KA89923-A610

US ARMY CORPS OF ENGINEERS
ALBUQUERQUE
ALBUQUERQUE, NEW MEXICO

JACOBS
JACOBS ENGINEERING GROUP INC.
777 Main Street
Fort Worth, TX 76102

COMBAT RESCUE HELICOPTER SIMULATOR FACILITY
KIRTLAND AIR FORCE BASE (AFB)
BERNALILLO COUNTY, NEW MEXICO

PARTIAL RENOVATION BUILDING 923
DOOR & FRAME SCHEDULE

SHEET ID
923
A-610

READY TO ADVERTISE

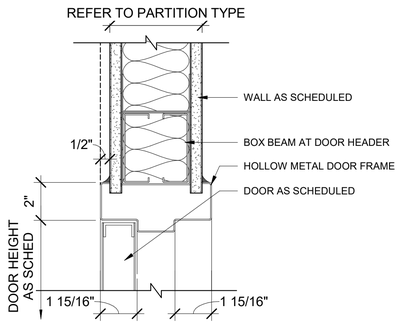

D1 HEAD DETAIL
3" = 1'-0"

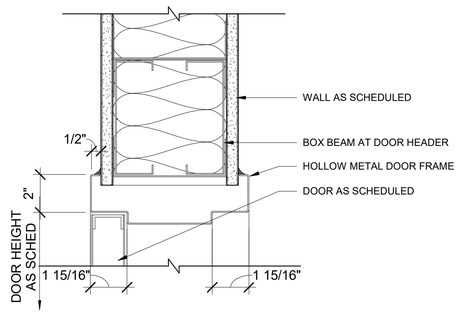

D3 HEAD DETAIL
3" = 1'-0"

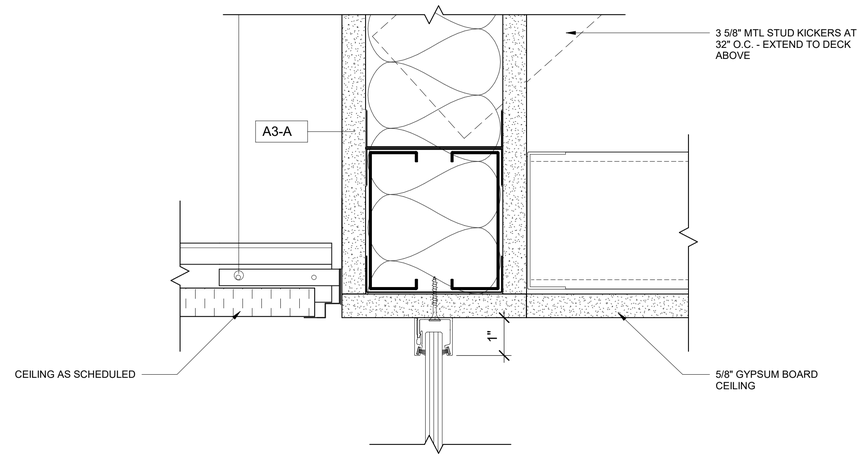

D5 GLASS PARTITION HEADER - BID OPTION #1
6" = 1'-0"

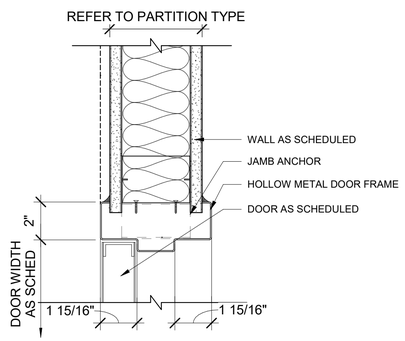

B1 JAMB DETAIL
3" = 1'-0"

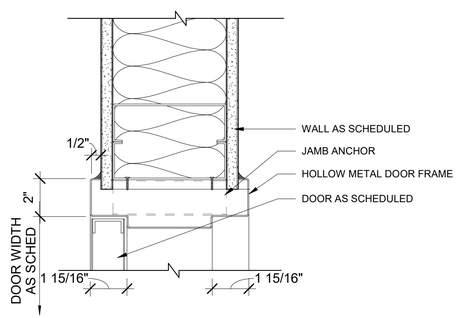

B3 JAMB DETAIL
3" = 1'-0"

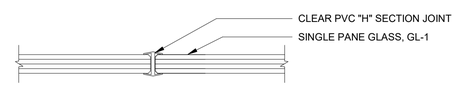

C5 JOINT DETAIL AT GLAZING - BID OPTION #1
6" = 1'-0"

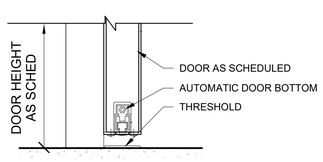

A1 SILL - AUTOMATIC DOOR BOTTOM
3" = 1'-0"

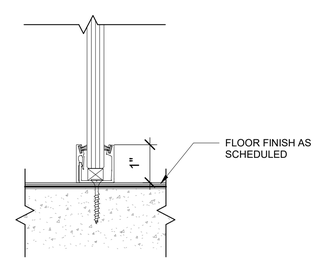

A5 GLASS PARTITION SILL - BID OPTION #1
6" = 1'-0"

GRAPHIC SCALE

6 4 2 0 6

SCALE: 3"=1'-0"

REGISTERED ARCHITECT
RICHARD G. PERRY JR
STATE OF TEXAS
16592
6.24.2021

US Army Corps of Engineers ®

MARK	DESCRIPTION	DATE

DESIGNED BY: J. PERRY
DRAWN BY: J. MCKINNEY
CHECKED BY: N. CARRUTH
SUBMITTED BY: E. OLMESS
SIZE: ANSI D
ISSUE DATE: JUNE 2022
CONTRACT NO.: W912PP-22-R-0021
FILENAME: K489923-A614

US ARMY CORPS OF ENGINEERS
ALBUQUERQUE
ALBUQUERQUE, NEW MEXICO

JACOBS
JACOBS ENGINEERING GROUP INC.
777 Main Street
Fort Worth, Texas 76102

COMBAT RESCUE HELICOPTER SIMULATOR FACILITY
KIRTLAND AIR FORCE BASE (AFB)
BERNALILLO COUNTY, NEW MEXICO

PARTIAL RENOVATION BUILDING 923
INTERIOR DOOR DETAILS

SHEET ID
923
A-614

READY TO ADVERTISE

1 2 3 4 5 6 7 8 9 10

ABBREVIATIONS

A

A/C	AIR CONDITION
A/E	ARCHITECT/ENGINEER
AB	ANCHOR BOLT
ABAN	ABANDON
ACC	ACCESSIBLE
ACS FLR	ACCESS FLOOR
ACST	ACOUSTIC
ACT	ACOUSTICAL CEILING TILE
AD	AREA DRAIN
ABA	ARCHITECTURAL BARRIERS ACT
ADA	AMERICANS WITH DISABILITIES ACT
ADJ	ADJUSTABLE
AFF	ABOVE FINISH FLOOR
AHU	AIR HANDLING UNIT
ALNMT	ALIGNMENT
ALT	ALTERNATE
ALUM	ALUMINUM
ANOD	ANODIZE
APPROX	APPROXIMATE
AR	AS REQUIRED
ARCH	ARCHITECT
ASKLR	AUTOMATIC SPRINKLER
ASR	AUTOMATIC SPRINKLER RISER
ASSY	ASSEMBLY
ASTM	AMERICAN SOCIETY FOR TESTING AND MATERIALS
ASYM	ASYMMETRICAL
AUTO	AUTOMATIC
AUX	AUXILIARY

B

B/B	BACK TO BACK
BAT	BATTEN
BC	BACK OF CURB
BD	BOARD
BEV	BEVEL
BF	BOTH FACES
BFF	BELOW FINISH FLOOR
BKBD	BACKBOARD
BL	BUILDING LINE
BLD	BUILD
BLDG	BUILDING
BLKT	BLANKET
BLST	BALLAST
BLW	BELOW
BM	BEAM
BN	BULLNOSE
BOS	BOTTOM OF STEEL
BOT	BOTTOM
BP	BUILDING PAPER
BRES	BULLET-RESISTANT
BRDG	BRIDGING
BRD	BEARING
BRKT	BRACKET
BRZ	BRONZE
BS	BOTH SIDES
BSMT	BASEMENT
BUR	BUILT-UP ROOFING

C

C	CHANNEL
C TO C	CENTER TO CENTER
CAB	CABINET
CB	CERAMIC BASE
CBB	CEMENTITIOUS BACKER BOARD
CD	CONSTRUCTION DOCUMENTS
CEM	CEMENT
CER	CERAMIC
CEQ	COLLATERAL EQUIPMENT
CFCI	CONTRACTOR FURNISHED CONTRACTOR INSTALLED
CFGI	CONTRACTOR FURNISHED GOVERNMENT INSTALLED
CFLG	COUNTERFLASHING
CG	CORNER GUARD
CHFR	CHAMFER
CI	CAST IRON
CIP	CAST IN PLACE
CIP	CAST IRON PIPE
CJ	CONTROL JOINT
CL	CENTER LINE
CLDG	CLADDING
CLG	CEILING
CLL	COLUMN LINE
CLO	CLOSET
CLR	CLEAR
CLT	CLEAT
CLWG	CLEAR WIRE GLASS
CM	CENTIMETER
CMPST	COMPOSITE
CMU	CONCRETE MASONRY UNIT
CNR	CORNER
CNTOR	CONTRACTOR
CNTR	COUNTER
COL	COLUMN
COMM	COMMUNICATION
COMPR	COMPRESSOR
CONN	CONNECT

C CONT

CONT	CONTINUE
CORR	CORRIDOR
COV	COVER
CPRS	COMPRESSIBLE
CPT	CARPET
CRS	COLD ROLLED STEEL
CSB	CONCRETE SPLASH BLOCK
CSWK	CASEWORK
CT	CERMIC TILE
CTR	CENTER
CTRL	CONTROL
CU	COPPER
CU	CUBIC

D

D	DEPTH
DBL	DOUBLE
DEG	DEGREE
DEMO	DEMOLITION
DIM	DIMENSION
DIST	DISTANCE
DMPF	DAMPPROOFING
DR	DOOR
DR FR	DOOR FRAME
DR OPN	DOOR OPENING
DS	DOWNSPOUT
DW	DISHWASHER
DW	DOMESTIC WATER
DWH	DOMESTIC WATER HEATER
DX OUT	DUPLEX OUTLET

E

EA	EACH
EF	EACH FACE
EGSB	EXTERIOR GYPSUM SHEATHING BOARD
EHD	ELECTRIC HAND DRYER
EIFS	EXTERIOR INSULATION AND FINISH SYSTEM
EJ	EXPANSION JOINT
EL	ELEVATION
ELEC	ELECTRIC
ELEV	ELEVATOR
EM	EXPANDED METAL
EMER	EMERGENCY
ENAM	ENAMEL
ENCL	ENCLOSURE
ENGR	ENGINEER
ENTR	ENTRANCE
ENVIR	ENVIRONMENT
EPRF	EXPLOSION PROOF
EQ	EQUAL
EQUIP	EQUIPMENT
ESCAL	ESCALATOR
EW	EACH WAY
EWC	ELECTRIC WATER COOLER
EXH FN	EXHAUST FAN
EXH HD	EXHAUST HOOD
EXHV	EXHAUST VENT
EXIST	EXISTING
EXP	EXPOSED
EXP	EXPANSION
EXT	EXTINGUISHER
EXT LT	EXIT LIGHT

F

F	FEMALE
FACIL	FACILITY
FAS	FIRE ALARM STATION
FB	FIRE BLANKET
FC BRK	FIRE BRICK
FD	FLOOR DRAIN
FDTN	FOUNDATION
FE	FIRE EXTINGUISHER
FEC	FIRE EXTINGUISHER CABINET
FF&E	FURNITURE, FIXTURES & EQUIPMENT
FF EL	FINISH FLOOR ELEVATION
FHC	FIRE HOSE CABINET
FIN	FINISH
FIN FL	FINISH FLOOR
FIN GR	FINISH GRADE
FIXT	FIXTURE
FLASH	FLASHING
FLR	FLOOR
FLUOR	FLUORESCENT
FM	FACTORY MUTUAL
FO	FINISHED OPENING
FOM	FACE OF MASONRY
FOW	FACE OF WALL
FP	FIRE PROTECTION
FPM	FEET PER MINUTE
FR	FIRE RATING
FSTNR	FASTENER
FT	FEET
FURG	FURRING
FURN	FURNITURE
FW	FIRE WALL
FWC	FABRIC WALL COVERING

G

GA	GAGE
GAL	GALLON
GALV	GALVANIZED
GB	GRAB BAR
GDR	GUARDRAIL
GEN	GENERAL
GFCI	GOVERNMENT FURNISHED CONTRACTOR INSTALLED
GFGI	GOVERNMENT FURNISHED GOVERNMENT INSTALLED
GLZ	GLAZING
GRTG	GRATING
GSB	GYPSUM SHEATHING BOARD
GT	GROUT
GUT	GUTTER
GYP BD	GYPSUM BOARD

H

HB	HOSE BIBB
HC	HANDICAP
HDW	HARDWARE
HID	HIGH INTENSITY DISCHARGE
HM	HOLLOW METAL
HMD	HOLLOW METAL FRAME
HNDRL	HANDRAIL
HORIZ	HORIZONTAL
HPLAM	HIGH PRESSURE PLASTIC LAMINATE
HST	HOIST
HT	HEIGHT
HVAC	HEATING, VENTILATION, AND AIR CONDITIONING
HW	HOT WATER

I

ID	IDENTIFICATION
INSUL	INSULATION
INT	INTERIOR
IP	IRON PIPE
IS	INSECT SCREEN

J

JAN	JANITOR
J-BOX	JUNCTION BOX

K

K	THOUSAND
KOP	KNOCK OUT PANEL

L

L	ANGLE
LAB	LABORATORY
LAD	LADDER
LAM	LAMINATE
LAM GL	LAMINATED GLASS
LAV	LAVATORY
LB	POUND
LBR	LUMBER
LDG	LANDING
LH	LEFT HAND
LHR	LEFT HAND REVERSE
LKR	LOCKER
LNDSCP	LANDSCAPE
LVR	LOUVER
LWC	LIGHTWEIGHT CONCRETE
LYR	LAYER

M

M	METER
MACH	MACHINE ROOM
MAINT	MAINTENANCE
MAX	MAXIMUM
MECH	MECHANICAL
MEMB	MEMBRANE
MFD	MANUFACTURED
MID	MIDDLE
MIN	MINIMUM
MIRR	MIRROR
MISC	MISCELLANEOUS
MLWK	MILLWORK
MM	MILLIMETER
MO	MASONRY OPENING
MOT	MOTOR
MRT	MARBLE THRESHOLD
MS	MOP SINK
MSB	MOP SERVICE BASIN
MTD	MOUNTED
MTL	METAL
MULL	MULLION
MVBL	MOVABLE
MW	MICROWAVE
MWP	MEMBRANE WATERPROOFING

N

N	NORTH
NIC	NOT IN CONTRACT
NO	NUMBER
NOM	NOMINAL
NS	NARROW STILE
NTS	NOT TO SCALE

O

OCC	OCCUPY
OFF	OFFICE
OHCD	OVERHEAD COILING DOOR
OPH	OPPOSITE HAND
OPNG	OPENING
OPP	OPPOSITE
OPR	OPERABLE

P

PBD	PARTICLE BOARD
PCC	PRECAST CONCRETE
PEJ	PREMOLDED EXPANSION JOINT
PERIM	PERIMETER
PERP	PERPENDICULAR
PIL	PILASTER
PL	PLATE
PL	PROPERTY LINE
PLAM	PLASTIC LAMINATE
PLB	PLUMB
PLYWD	PLYWOOD
PNEU	PNEUMATIC
PNL	PANEL
PORT	PORTABLE
PR	PAIR
PR	PIPE RAIL
PRCST	PRECAST
PREFAB	PREFABICATED
PREFIN	PREFINISHED
PROJ	PROJECT
PT	PORCELAIN TILE
PTD	PAPER TOWEL DISPENSER
PTDR	PAPER TOWEL DISPENSER AND RECEPTACLE
PTN	PARTITION
PTR	PAPER TOWEL RECEPTACLE
PUR	PURLINS
PVG	PAVING

R

R	RADIUS
R	THERMAL RESISTANCE
RB	RESILIENT BASE
RB HK	ROBE HOOK
RBR	RUBBER
RC	REINFORCED CONCRETE
RCP	REFLECTED CEILING PLAN
RCVR	RECEIVER
RD	ROOF DRAIN
RDC	REDUCER
REBAR	REINFORCING STEEL BARS
REC	RECESSED
RECD	RECEIVED
RE:	REFERENCED
REF	REFRIGERATOR
REG	REGULATION
REINF	REINFORCE
REM	REMOVABLE
REP	REPAIR
REPL	REPLACE
REQD	REQUIRED
RESIL	RESILIENT
REST	RESTROOM
RF	RESILIENT FLOORING
RH	RIGHT HAND
RHR	RIGHT HAND REVERSE
RLG	RAILING
RM	ROOM
RND	ROUND
RO	ROUGH OPENING
ROW	RIGHT OF WAY
RT	RIGHT
RVL	REVEAL

S

S	SOUTH
SAN	SANITARY
SAT	SUSPENDED ACOUSTICAL TILE
SB	SPLASH BLOCK
SC	SEALED CONCRETE
SCD	SEAT COVER DISPENSER
SCHED	SCHEDULE
SCP	SCUPPER
SCWD	SOLID CORE WOOD DOOR
SDL	SADDLE
SEG	SEGMENT
SEP	SEPERATE
SF	SQUARE FOOT
SHFT	SHAFT (ELEVATOR)
SHT	SHEET

S CONT

SHTHG	SHEATHING
SIM	SIMILAR
SLNT	SEALANT
SM	SHEET METAL
SND	SANITARY NAPKIN DISPENSER
SND INS	SOUND INSULATION
SP	SUMP PIT
SQ	SQUARE
SS	STAINLESS STEEL
ST	STAIRS
STC	SOUND TRANSMISSION CLASS
STD	STANDARD
STL	STEEL
STL JST	STEEL JOIST
STL PL	STEEL PLATE
STL RF	STEEL ROOF DECK
STL TR	STEEL TRUSS
STOR	STORAGE
STR	STRINGER
STRM	STOREROOM
STRUCT	STRUCTURAL
SUSP	SUSPENDED
SW	SIDEWALK
SYM	SYMBOL
SYMM	SYMMETRICAL
SYS	SYSTEM

T

T	TREAD
TB	THROUGH BOLT
TB	TOWEL BAR
TEL	TELEPHONE
TEMP	TEMPORARY
TER	TERRAZZO
THERM	THERMAL
THK	THICK
THRES	THRESHOLD
TOC	TABLE OF CONTENT
TOM	TOP OF MASONRY
TOS	TOP OF STEEL
TOW	TOP OF WALL
TPD	TOILET PAPER DISPENSER
TRANS	TRANSPARENT
TS	TUBE STEEL
TSTAT	THERMOSTAT
TYP	TYPICAL

U

UON	UNLESS OTHERWISE NOTED
UPS	UNINTERUPTIBLE POWER SUPPLY
UR	URINAL

V

VAC	VACUUM
VB	VINYL BASE
VCT	VINYL COMPOSITION TILE
VERT	VERTICAL
VIF	VERIFY IN FIELD
VNR	VENEER
VOL	VOLUME
VR	VAPOR RETARDER
VRFY	VERIFY
VWF	VINYL WALL FABRIC

W

W	WIDE
W CAB	WALL CABINETS
W/O	WITHOUT
WBL	WOOD BLOCKING
WC	WATER CLOSET
WD	WOOD
WDW	WINDOW
WF	WIDE FLANGE
WF BM	BEAM, WIDE FLANGE
WGL	WIRED GLASS
WH	WALL HUNG
WPM	WATERPROOF MEMBRANE
WSCT	WAINSCOT
WT	WEIGHT
WWF	WELDED WIRE FABRIC

X

X BRACE	STRUCTURAL LATERAL BRACE
XFMR	TRANSFORMER

Y

Y	YARD

ARCHITECTURAL SYMBOLS

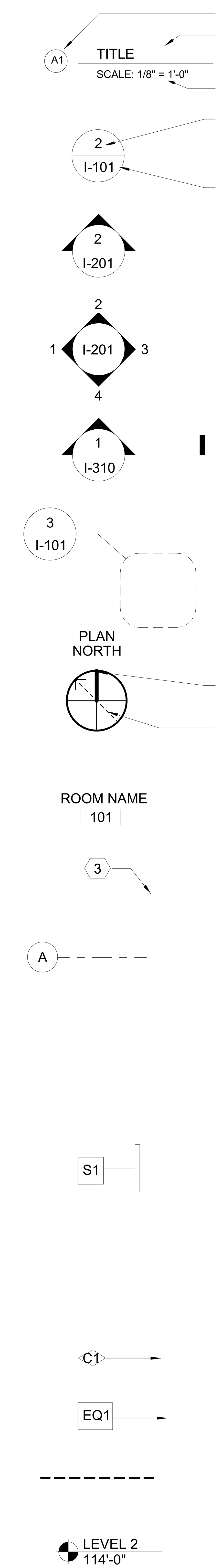

DETAIL IDENTIFICATION
TITLE OF DRAWING
STATED SCALE
DETAIL IDENTIFICATION,
SHEET ON WHICH DETAIL IS DRAWN
INTERIOR ELEVATION
INTERIOR ELEVATION MULTIPLE VIEWS
SECTION
ENLARGED PLAN/DETAIL REFERENCE
PLAN NORTH ARROW
TRUE NORTH ARROW
ROOM NAME AND NUMBER
NOTES BY SYMBOL (KEYNOTES)
COLUMN CENTERLINE
REVISION
SIGNAGE SYMBOL
FURNITURE SYMBOL
EQUIPMENT SYMBOL
MATCH LINE
DATUM MARKER

GENERAL NOTES

A. VERIFY AND DOCUMENT CONDITIONS AND DIMENSIONS ON THE JOB SITE BEFORE BEGINNING CONSTRUCTION.
B. DO NOT SCALE THE DRAWINGS FOR CONSTRUCTION PURPOSES.
C. VERIFY SIZE, LOCATIONS AND CHARACTERISTICS OF ALL EQUIPMENT TO BE FURNISHED WITH MANUFACTURERS OR SUPPLIERS BEFORE BEGINNING CONSTRUCTION.
D. VERIFY SIZE AND LOCATION OF ALL OPENINGS FOR EQUIPMENT AND RELATED WORK.
E. ALL PLAN DIMENSIONS ARE TO FACE OF GYPSUM BOARD, FACE OF BRICK, FACE OF CONCRETE MASONRY UNITS OR CENTERLINE OF COLUMNS, UNLESS OTHERWISE NOTED.
F. REFER TO ARCHITECTURAL, MECHANICAL, PLUMBING AND ELECTRICAL DRAWINGS FOR ADDITIONAL INFORMATION AND COORDINATION.

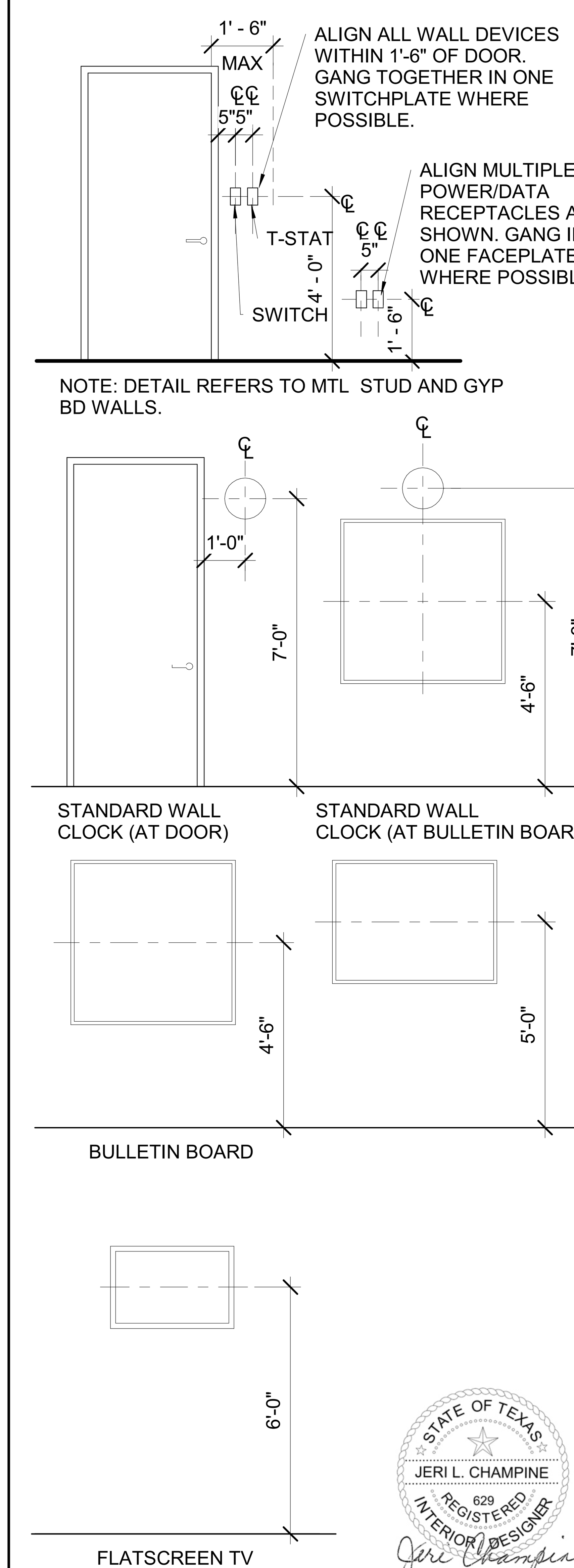

STATE OF TEXAS
JERI L. CHAMPINE
629
REGISTERED INTERIOR DESIGNER
Jeri Champine
6.24.2021

A8 MOUNTING HEIGHTS UON
3/8" = 1'-0"

US Army Corps of Engineers ®

MARK | DESCRIPTION | DATE

ISSUE DATE: JUNE 2022
CONTRACT NO. : W912PP-22-R-0021
DESIGNED BY: G.MOLLICA
DRAWN BY: G.MOLLICA
CHECKED BY: B. BLACK
SUBMITTED BY: E. OLNESS
SIZE: ANSI D
FILENAME: KA69-923-I-001

US ARMY CORPS OF ENGINEERS
ALBUQUERQUE
ALBUQUERQUE, NEW MEXICO

JACOBS®
JACOBS ENGINEERING GROUP INC.
777 Main Street
Fort Worth, TX 76102

COMBAT RESCUE HELICOPTER SIMULATOR FACILITY
KIRTLAND AIR FORCE BASE (AFB),
BERNALILLO COUNTY, NEW MEXICO
PARTIAL RENOVATION BUILDING 923
GENERAL NOTES AND SYMBOLS

SHEET ID
923
I-001

READY TO ADVERTISE

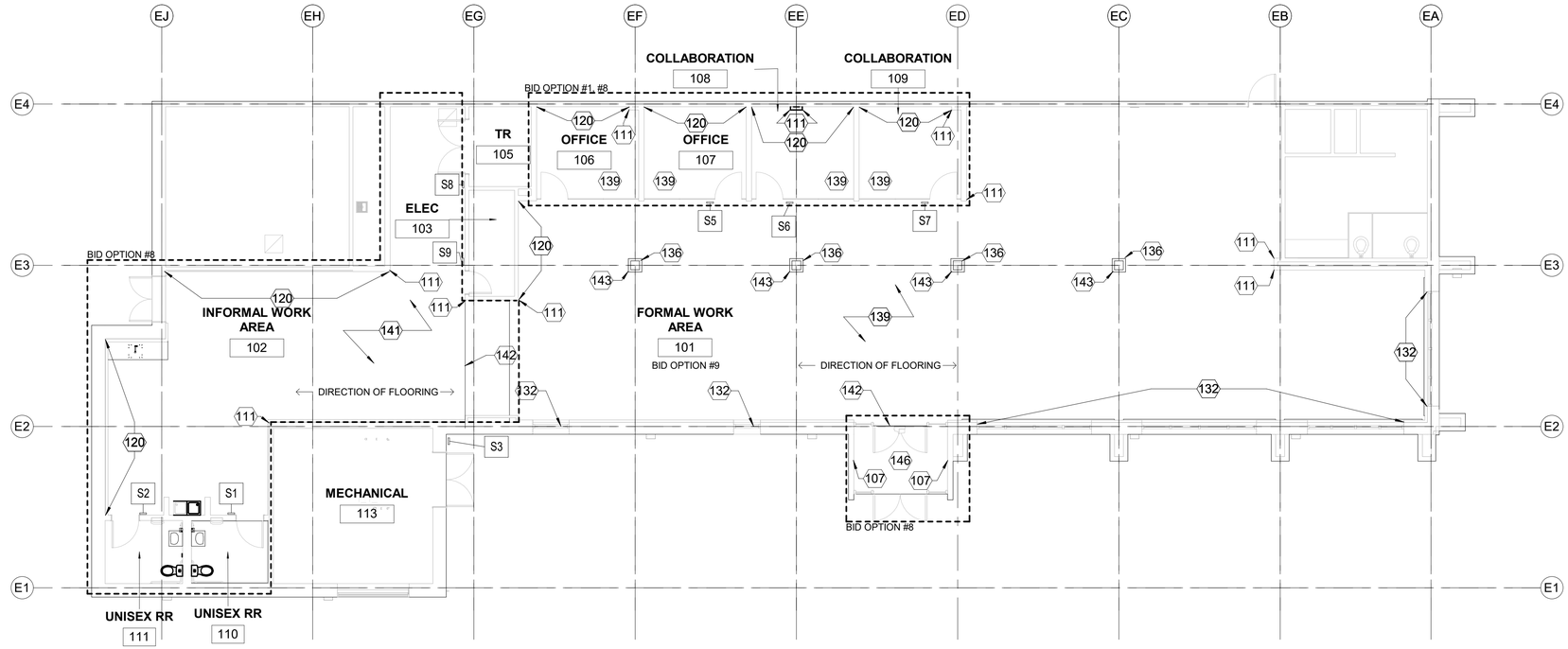

D1 FINISH AND SIGNAGE PLAN - BID OPTIONS

1/8" = 1'-0"

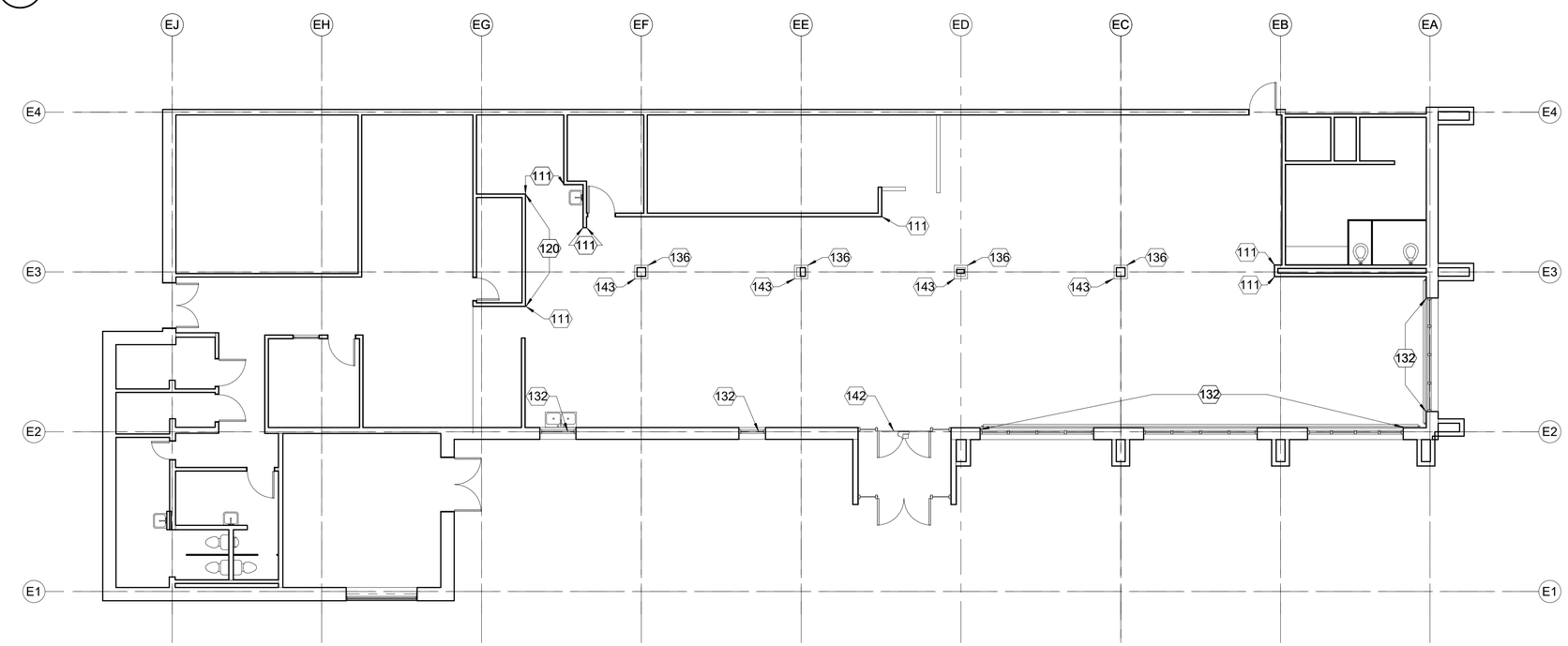

A1 FINISH AND SIGNAGE PLAN - BASE BID

1/8" = 1'-0"

GENERAL NOTES - FINISH PLANS

A	FIELD VERIFY ALL DIMENSIONS PRIOR TO ORDERING MATERIALS/FINISHES.
B	REFER TO I-610 FOR FINISH LEGEND.
C	ALL TRANSITIONS ARE TO OCCUR AT THE CENTERLINE OF THE DOOR, DOORWAY OR CEILING LINE, UNLESS OTHERWISE NOTED.
D	REFER TO REFLECTED CEILING PLANS FOR ADDITIONAL INFORMATION.
E	APPLY BASE AS SPECIFIED ON GYSUM BOARD.

KEYNOTES

107	INSTALL CRASH RAIL CENTERED AT 3'-0" AFF. REFER TO I-610 FOR FINISH.
111	CORNER GUARD CG-1.
120	PAINT PT-3.
132	INSTALL WS-1 WINDOW SHADE AT EXTERIOR WINDOWS, UON.
136	PAINT COLUMNS PT-3.
139	CARPET TILE, CPT-1
141	LUXURY VINYL TILE, LVT-1
142	FLOORING TRANSITION LINE
143	APPLY CG-1 ON ALL FOUR CORNERS
146	WM-1, WALK-OFF MAT

SIGNAGE KEY

1i — INDICATES SIGN MOUNTED ON WALL. REFER TO SCHEDULE 1-611

1i — INDICATES SIGN MOUNTED ON SIDELIGHT. REFER TO SCHEDULE ON 1-611

KEY PLAN

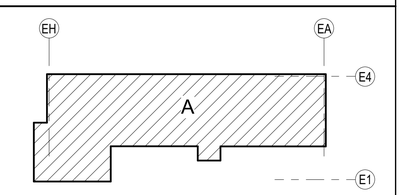

GRAPHIC SCALE

8 0 8 16

Scale: 1/8 INCH = 1 FOOT

PROJECT NORTH

PLAN NORTH

STATE OF TEXAS
JERI L. CHAMPINE
629
REGISTERED
INTERIOR DESIGNER
6.24.2021

US Army Corps of Engineers ®

MARK	DESCRIPTION	DATE

DESIGNED BY: G.MOLLICA
DRAWN BY: G.MOLLICA
CHECKED BY: S. LEBEAU
SUBMITTED BY: E. OLMESS
SIZE: ANSI D
FILENAME: K408-923-IN110
ISSUE DATE: JUNE 2022
CONTRACT NO.: W912PP-22-R-0021

US ARMY CORPS OF ENGINEERS
ALBUQUERQUE
ALBUQUERQUE, NEW MEXICO

JACOBS
JACOBS ENGINEERING GROUP INC.
777 Main Street
Fort Worth, Texas 76102

COMBAT RESCUE HELICOPTER SIMULATOR FACILITY
KIRTLAND AIR FORCE BASE (AFB)
BERNALILLO COUNTY, NEW MEXICO

PARTIAL RENOVATION BUILDING 923
OVERALL FINISH AND SIGNAGE PLAN

SHEET ID
923
IN110

READY TO ADVERTISE

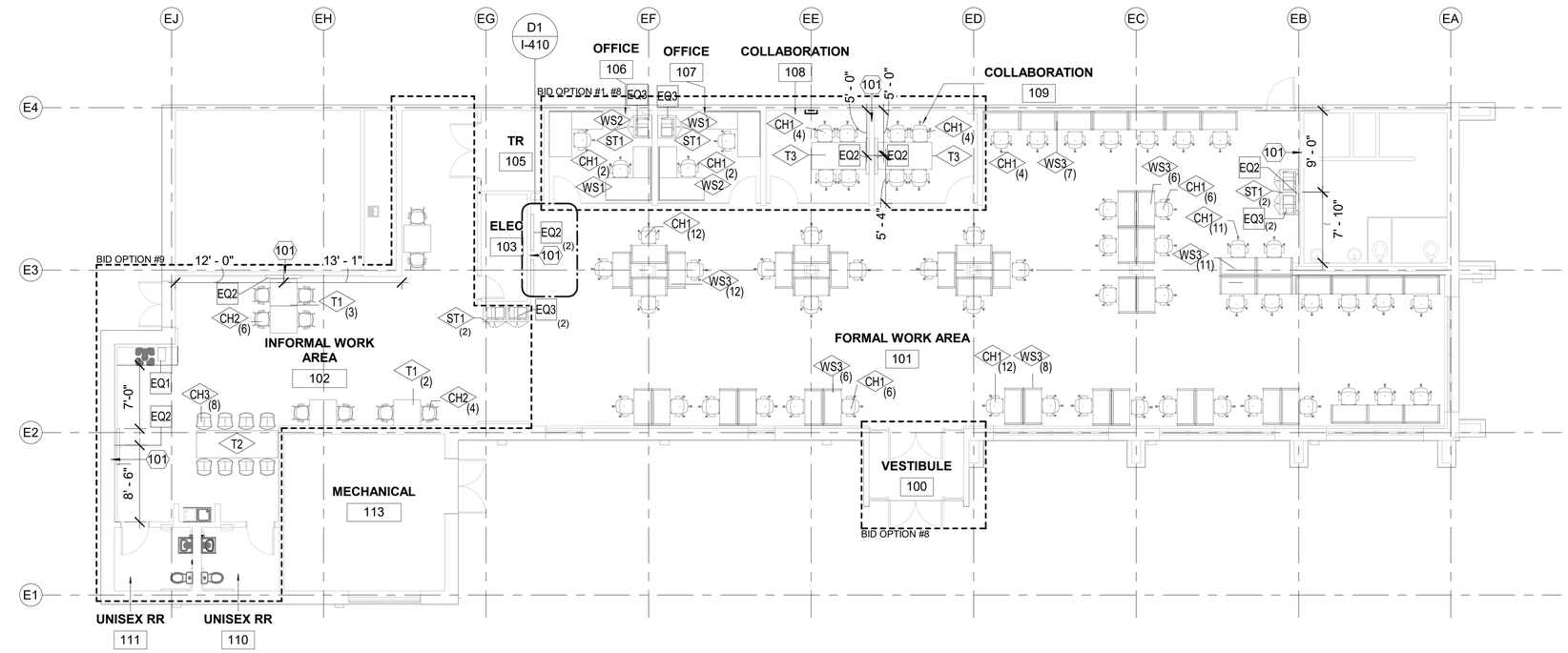

FURNITURE, FIXTURES & EQUIPMENT PLAN - BID OPTIONS

D1

1/8" = 1'-0"

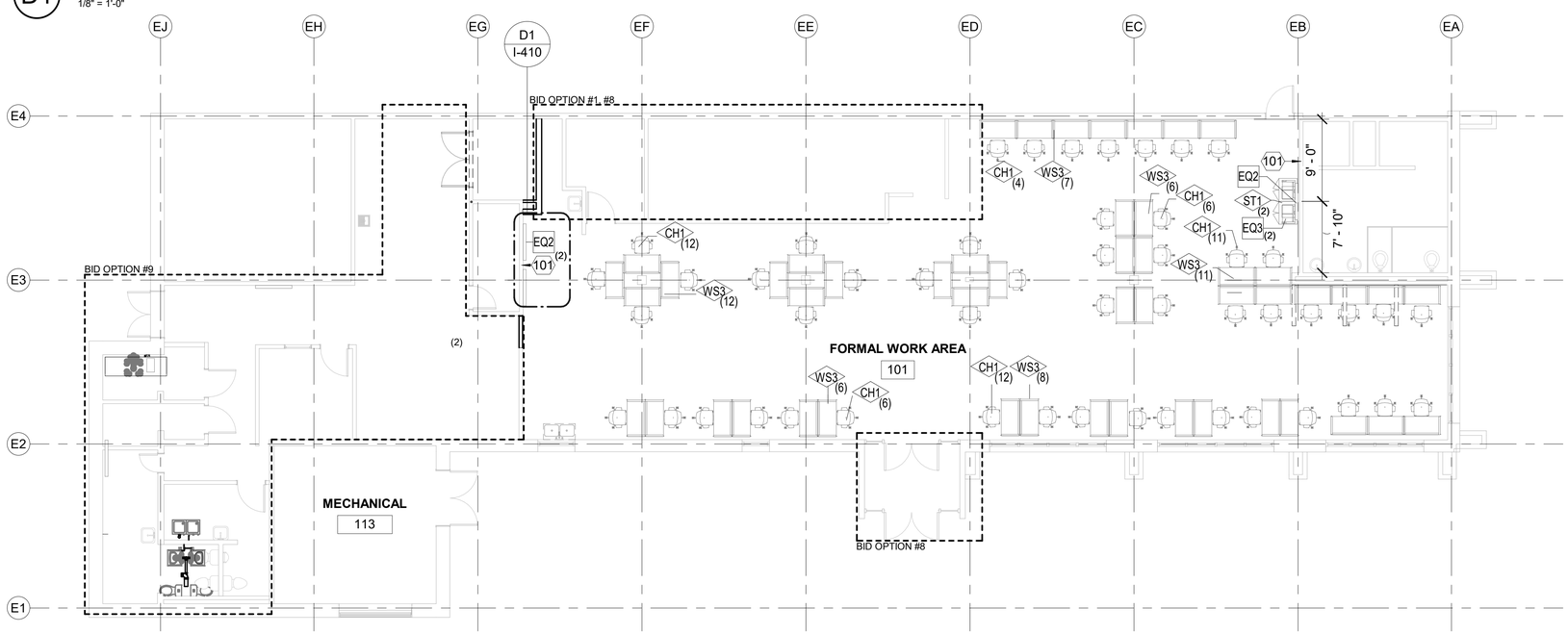

FURNITURE, FIXTURES & EQUIPMENT PLAN - BASE BID

A1

1/8" = 1'-0"

GENERAL NOTES - FF&E PLANS

A	FURNITURE, FIXTURE & EQUIPMENT (FF&E) IS SHOWN FOR COORDINATION, AND IS GOVERNMENT FURNISHED GOVERNMENT INSTALLED (GFGI).
B	VERIFY FIELD CONDITIONS PRIOR TO ORDERING FF&E TO ENSURE PROPER FIT OF ALL ITEMS.
C	GENERAL CONTRACTOR SHALL COORDIATE WITH FURNITURE DEALER TO ALLOW BUILDING ACCESS FOR FIELD CONDITION VERIFICATION.
D	GENERAL CONTRACTOR IS RESPONSIBLE FOR ELECTRICAL CONNECTIONS TO THE BUILDING, INCLUDING J BOXES TO SUPPORT FF&E. FURNITURE DEALER IS RESPONSIBLE FOR THE ELECTRICAL HOOKUP OF ALL FF&E, INCLUDING WHIPS FROM WALL CONNECTIONS TO THE FURNITURE AND CONNECTING PRE-WIRED PANELS, UP TO AND INCLUDING FACEPLATES.
E	INFORMATION TECHNOLOGY (IT) (PHONE/ LAN ETC.) WIRING SHALL BE PROVIDED BY OTHERS AFTER INSTALLATION: COORDINATE WITH CONTRACTING OFFICER.
F	PROVIDE ALL FF&E COMPONENTS REQUIRED TO FULFILL THE DESIGN INTENT OUTLINED IN THE FF&E PACKAGE, AND ASSEMBLE FF&E PER MANUFACTURER'S WRITTEN INSTRUCTIONS.FF&E PROVIDER SHALL COORDINATE WITH CONTRACTING OFFICER AS REQUIRED TO ENSURE THAT ALL FF&E IS SUCCESSFULLY INSTALLED AND OPERATIONAL PRIOR TO OCCUPANCY.
G	AWARDED FURNITURE DEALER TO PROVIDE SHOP DRAWINGS WITH PANELS AND ELECTRICAL/COMM CONNECTIONS FOR GOVERNMENT APPROVAL.
H	ALL WORKSURFACES ARE TO HAVE ONE GROMMET WITH COVER MINIMUM.

KEYNOTES

101	ADD WALL BLOCKING FOR MARKER BOARD/ MONITOR AS REQUIRED.

FF&E - GFGI

MARK	DESCRIPTION
CH1	CHAIR, TRAINING/TASK
CH2	CHAIR, BREAKROOM
CH3	CHAIR, STOOL
ST1	STORAGE, DOOR-DOUBLE
T1	TABLE, 36" x 36"
T2	TABLE, 36" x 108"
T3	TABLE, TRAINING 6'-0"
WS1	WORKSTATION, L-SHAPED LEFT
WS2	WORKSTATION, L-SHAPED RIGHT
WS3	WORKSTATION, 24" x 50"

EQUIP - GFCI

MARK	DESCRIPTION
EQ1	COFFEE MAKER
EQ2	WALL MOUNTED TELEVISION, 72" AND BRACKET
EQ3	PRINTER

KEY PLAN

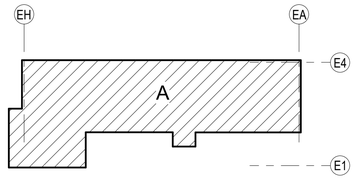

GRAPHIC SCALE

8 0 8 16

Scale: 1/8 INCH = 1 FOOT

PROJECT NORTH

PLAN NORTH

STATE OF TEXAS
JERI L. CHAMPINE
629
REGISTERED
INTERIOR DESIGNER
6.24.2021

US Army Corps of Engineers ®

MARK	DESCRIPTION	DATE

DESIGNED BY: G.MOLLICA
DRAWN BY: G.MOLLICA
CHECKED BY: S. LEBEAU
SUBMITTED BY: E. OLMESS
SIZE: ANSI D
FILENAME: K486-923-IF111
ISSUE DATE: JUNE 2022
CONTRACT NO.: W912PP-22-R-0021

US ARMY CORPS OF ENGINEERS
ALBUQUERQUE
ALBUQUERQUE, NEW MEXICO

JACOBS
JACOBS ENGINEERING GROUP INC.
777 Main Street
Fort Worth, TX 76102

COMBAT RESCUE HELICOPTER SIMULATOR FACILITY
KIRTLAND AIR FORCE BASE (AFB)
BERNALILLO COUNTY, NEW MEXICO

PARTIAL RENOVATION BUILDING 923

FURNITURE, FIXTURES, & EQUIPMENT PLAN

SHEET ID
923
IF110

READY TO ADVERTISE

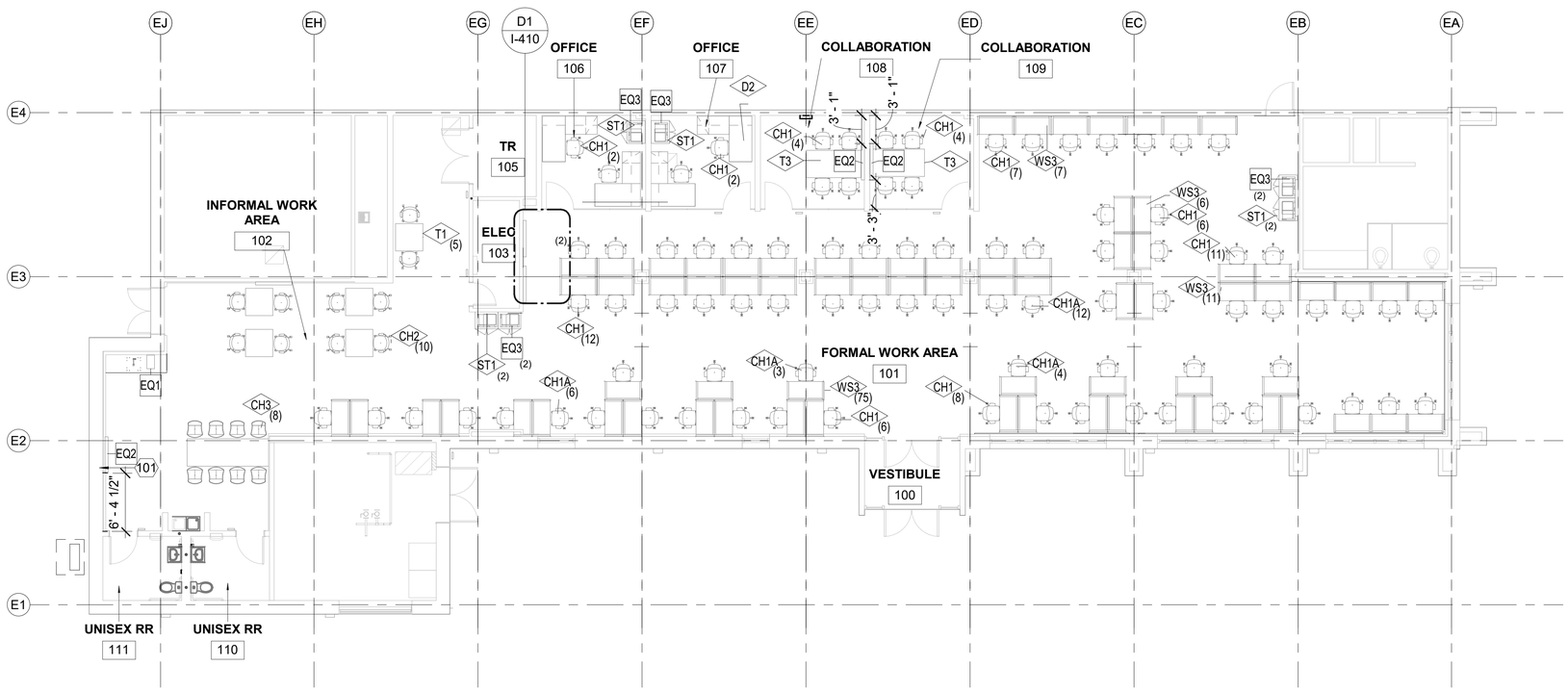

FURNITURE, FIXTURES & EQUIPMENT PLAN 75
WORKSTATIONS OPTION

A1

1/8" = 1'-0"

GENERAL NOTES - FF&E PLANS

A	FURNITURE, FIXTURE & EQUIPMENT (FF&E) IS SHOWN FOR COORDINATION, AND IS GOVERNMENT FURNISHED GOVERNMENT INSTALLED (GFGI).
B	VERIFY FIELD CONDITIONS PRIOR TO ORDERING FF&E TO ENSURE PROPER FIT OF ALL ITEMS.
C	GENERAL CONTRACTOR SHALL COORDIATE WITH FURNITURE DEALER TO ALLOW BUILDING ACCESS FOR FIELD CONDITION VERIFICATION.
D	GENERAL CONTRACTOR IS RESPONSIBLE FOR ELECTRICAL CONNECTIONS TO THE BUILDING, INCLUDING J BOXES TO SUPPORT FF&E. FURNITURE DEALER IS RESPONSIBLE FOR THE ELECTRICAL HOOKUP OF ALL FF&E, INCLUDING WHIPS FROM WALL CONNECTIONS TO THE FURNITURE AND CONNECTING PRE-WIRED PANELS, UP TO AND INCLUDING FACEPLATES.
E	INFORMATION TECHNOLOGY (IT) (PHONE/ LAN ETC.) WIRING SHALL BE PROVIDED BY OTHERS AFTER INSTALLATION: COORDINATE WITH CONTRACTING OFFICER.
F	PROVIDE ALL FF&E COMPONENTS REQUIRED TO FULFILL THE DESIGN INTENT OUTLINED IN THE FF&E PACKAGE, AND ASSEMBLE FF&E PER MANUFACTURER'S WRITTEN INSTRUCTIONS.FF&E PROVIDER SHALL COORDINATE WITH CONTRACTING OFFICER AS REQUIRED TO ENSURE THAT ALL FF&E IS SUCCESSFULLY INSTALLED AND OPERATIONAL PRIOR TO OCCUPANCY.
G	AWARDED FURNITURE DEALER TO PROVIDE SHOP DRAWINGS WITH PANELS AND ELECTRICAL/COMM CONNECTIONS FOR GOVERNMENT APPROVAL.
H	ALL WORKSURFACES ARE TO HAVE ONE GROMMET WITH COVER MINIMUM.

KEYNOTES

101	ADD WALL BLOCKING FOR MARKER BOARD/ MONITOR AS REQUIRED.

FF&E - GFGI

MARK	DESCRIPTION
CH1	CHAIR, TRAINING/TASK
CH2	CHAIR, BREAKROOM
CH3	CHAIR, STOOL
ST1	STORAGE, DOOR-DOUBLE
T1	TABLE, 36" x 36"
T2	TABLE, 36" x 108"
T3	TABLE, TRAINING 6'-0"
WS1	WORKSTATION, L-SHAPED LEFT
WS2	WORKSTATION, L-SHAPED RIGHT
WS3	WORKSTATION, 24" x 50"

EQUIP - GFCI

MARK	DESCRIPTION
EQ1	COFFEE MAKER
EQ2	WALL MOUNTED TELEVISION, 72" AND BRACKET
EQ3	PRINTER

STATE OF TEXAS
JERI L. CHAMPINE
629
REGISTERED
INTERIOR DESIGNER
6.24.2021

US Army Corps of Engineers ®

MARK	DESCRIPTION	DATE

ISSUE DATE: JUNE 2022
CONTRACT NO.: W912PP-22-R-0021
DESIGNED BY: G.MOLLICA
DRAWN BY: G.MOLLICA
CHECKED BY: S. LEBEAU
SUBMITTED BY:
SIZE: ANSI D
FILENAME:

US ARMY CORPS OF ENGINEERS
ALBUQUERQUE
ALBUQUERQUE, NEW MEXICO

JACOBS
JACOBS ENGINEERING GROUP INC.
777 Main Street
Fort Worth, Texas 76102

COMBAT RESCUE HELICOPTER SIMULATOR FACILITY
KIRTLAND AIR FORCE BASE (AFB),
BERNALILLO COUNTY, NEW MEXICO

PARTIAL RENOVATION BUILDING 923
FURNITURE, FIXTURES & EQUIPMENT PLAN 75
WORKSTATIONS OPTION

SHEET ID

IF111

READY TO ADVERTISE

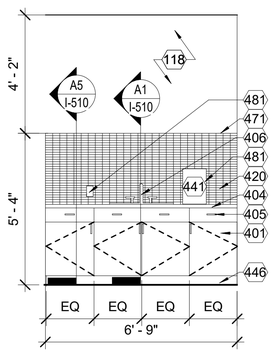

E1 INFORMAL AREA - NORTH ELEV.
3/8" = 1'-0"

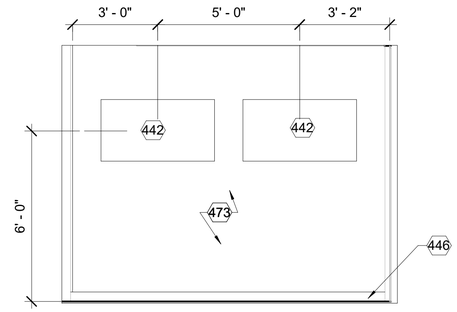

E3 FORMAL AREA - WEST ELEV.
3/8" = 1'-0"

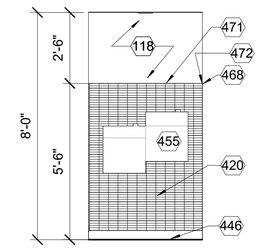

E7 EWC ALCOVE
3/8" = 1'-0"

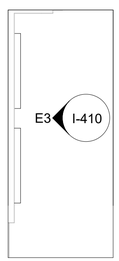

D1 FORMAL AREA - ENLARGED PLAN
1/4" = 1'-0"

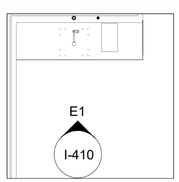

C1 INFORMAL AREA - ENLARGED PLAN
1/4" = 1'-0"

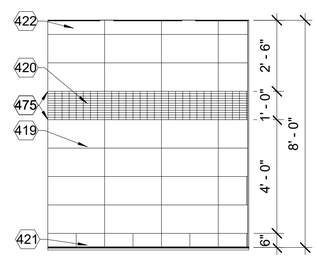

C3 TYP. RESTROOM 110 - WEST ELEV.
3/8" = 1'-0"

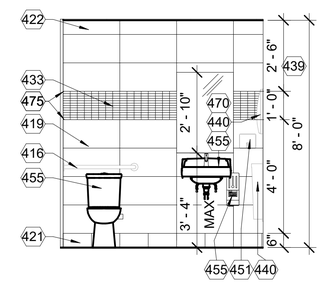

C7 TYP. RESTROOM 110 - EAST ELEV.
3/8" = 1'-0"

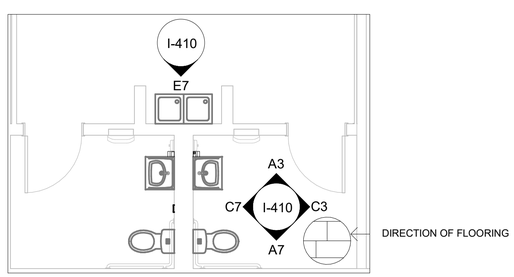

A1 TYP. RESTROOM 110/111- ENLARGED PLAN
1/4" = 1'-0"

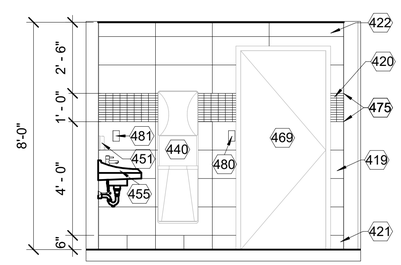

A3 TYP. RESTROOM 110 - NORTH ELEV.
3/8" = 1'-0"

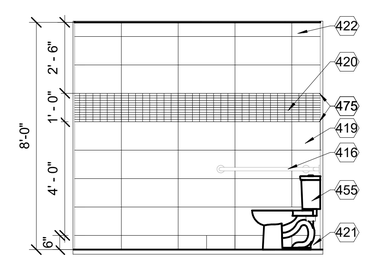

A7 TYP. RESTROOM 110 - SOUTH ELEV.
3/8" = 1'-0"

GENERAL NOTES - ELEVATIONS

A	REFER TO I-610 FOR FINISH LEGEND.
B	ELEVATIONS ARE SHOWN TO INDICATE FINISHES ONLY, REFER TO ARCHITECTURAL AND PLUMBING PLANS FOR TYPE, LOCATION AND PLACEMENT OF PLUMBING FIXTURES.
C	REFER TO ARCHITECTURAL FOR TYPE, LOCATION, AND PLACEMENT OF TOILET ACCESSORIES, GRAB BARS, ETC.
D	FIELD VERIFY ALL DIMENSIONS PRIOR TO ORDERING MATERIALS AND FINISHES.
E	REFER TO REFLECTED CEILING PLAN FOR CEILING HEIGHTS AND ADDITIONAL CEILING INFORMATION.
F	WHERE TILE IS INSTALLED, UTILIZE MANUFACTURER'S MATCHING BASE TRIM PIECES AT INSIDE AND OUTSIDE CORNERS.
G	AT TILED WALLS, INSTALL FULL HEIGHT ANDOD. ALUM. TRIM PIECE AT ALL OUTSIDE CORNERS: AS INDICATED.
H	AT TILED WALLS CUT TILE AROUND LIGHT SWITCHES AND RECEPTACLES. REFER TO ELECTRICAL DRAWING FOR POWER PLAN A1/EP110.

KEYNOTES

118	PAINT PT-1.
401	PL-1, PLASTIC LAMINATE.
404	SOLID SURFACE COUNTERTOP: SS-1.
405	6" WIRE PULLS-BRUSHED STAINLESS FINISH, TYP.
406	SINK AND FAUCET: REFER TO PLUMBING.
416	ADA GRAB BARS: REFER TO ARCH.
419	PORCELAIN WALL TILE - PWT-1.
420	PORCELAIN WALL TILE - PWT-2.
421	PORCELAIN TILE BASE - PTB-1.
422	ROW OF CUT TILE.
433	PORCELAIN TILE -PWT-3.
440	WALL MOUNTED DISPENSER W/ PAPER TOWEL ROLL, GFCI. REFER TO ARCH FOR DETAILS.
441	COFFEE MAKER: AP1.
442	WALL MOUNTED MONITOR, 55" WITH BRACKET. GFCI.
446	RB-1, RESILIENT BASE
451	SOAP DISPENSER, GFCI. REFER TO ARCH.
455	REFER TO PLUMBING FOR TYPE AND LOCATION OF PLUMBING FIXTURES TYP.
468	TILE TRIM AT CORNER. REFER TO A3/ I-510 FOR DETAIL.
469	PAINT DOOR AND TRIM PT-2.
470	WALL MOUNTED MIRROR (EASED EDGE). MOUNT MIRROR ON TILE.
471	TILE TRIM AT TOP. REFER TO A1/ I-510 FOR DETAIL.
472	CONTINUE TILE WAINSCOT BOTH SIDE WALLS OF ALCOVE. TRIM VERTICAL EDGE REFER TO A1/I-510 FOR DETAIL.
473	PAINT, PT-3.
475	TILE TRIM ABOVE AND BELOW. REFER TO A1/ I-510 FOR DETAIL.
480	CUT TILE FOR LIGHT SWITCH, COORDINATE WITH ELECTRICAL CONTRACTOR.
481	CUT TILE FOR ELECTRICAL RECEPTABLE. COORDINATE WITH ELECTRICAL CONTRACTOR. INSTALL RECEPTABLE BOX VERTICALLY.

GRAPHIC SCALE

4 3 2 1 0 4

SCALE: 1/4"=1'-0"

STATE OF TEXAS
JERI L. CHAMPINE
629
REGISTERED
INTERIOR DESIGNER
6.24.2021

US Army Corps of Engineers ®

MARK	DESCRIPTION	DATE

DESIGNED BY: G.MOLLICA
DRAWN BY: G.MOLLICA
CHECKED BY: S. LEBEAU
SUBMITTED BY: E. OLMESS
SIZE: ANSI D
ISSUE DATE: JUNE 2022
CONTRACT NO.: W912PP-22-R-0021
FILENAME: K486-923-I-410

US ARMY CORPS OF ENGINEERS
ALBUQUERQUE
ALBUQUERQUE, NEW MEXICO

JACOBS
JACOBS ENGINEERING GROUP INC.
777 Main Street
Fort Worth, TX 76102

COMBAT RESCUE HELICOPTER SIMULATOR FACILITY
KIRTLAND AIR FORCE BASE (AFB)
BERNALILLO COUNTY, NEW MEXICO
PARTIAL RENOVATION BUILDING 923
INTERIOR ELEVATIONS AND ENLARGED PLANS

SHEET ID
923
I-410

READY TO ADVERTISE

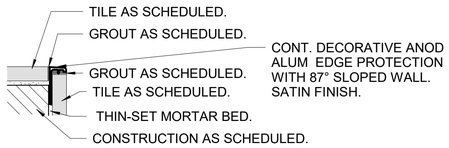

F1 TILE TRIM AT CORNER
6" = 1'-0"

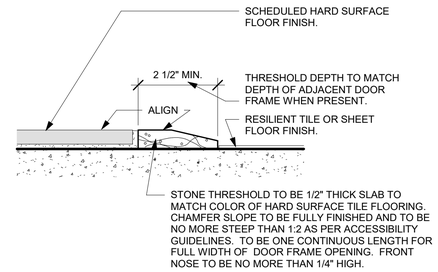

F7 CERAMIC TILE TO RESILIENT FLOORING
6" = 1'-0"

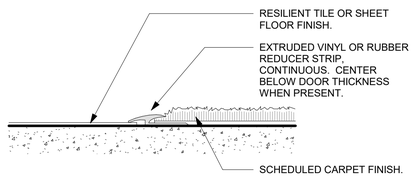

D1 RESILIENT FLOORING TO CARPET
6" = 1'-0"

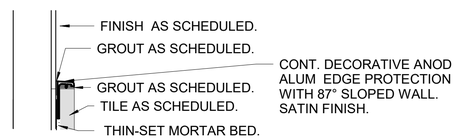

D5 TILE TRIM AT WAINSCOT
6" = 1'-0"

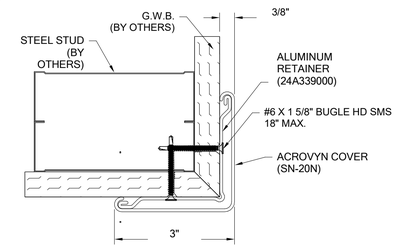

D7 CORNER GUARD - SURFACE MOUNTED
1/4" = 1'-0"

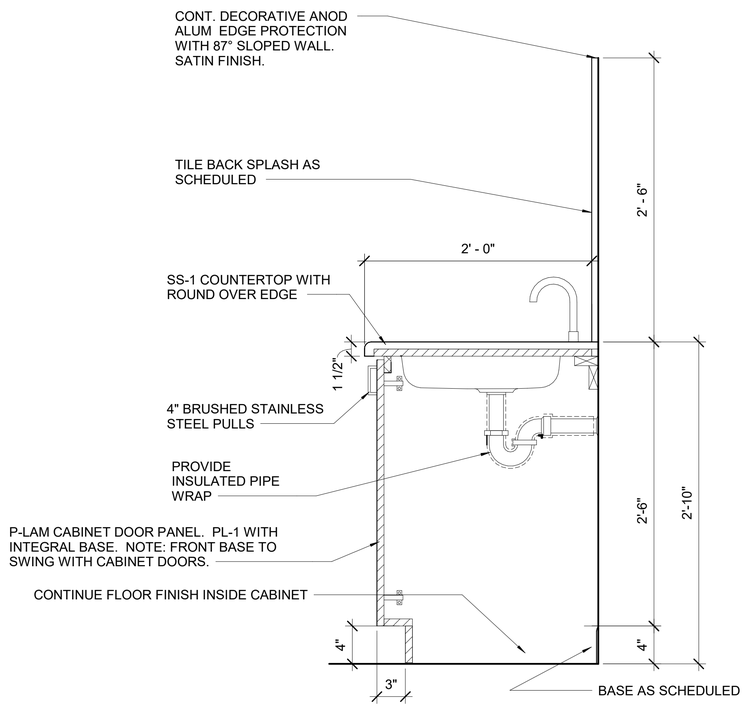

A1 MILLWORK SECTION - LOWER CABINET AT SINK
1 1/2" = 1'-0"

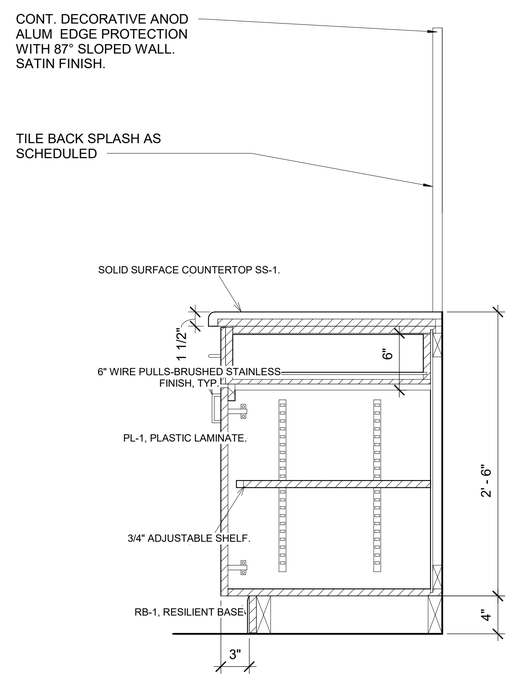

A5 MILLWORK SECTION - LOWER CABINET
1 1/2" = 1'-0"

GRAPHIC SCALE

3 2 1 0 3
SCALE: 6"=1'-0"

1 0 1
SCALE: 1 1/2"=1'-0"

STATE OF TEXAS
JERI L. CHAMPINE
629
REGISTERED INTERIOR DESIGNER
6.24.2021

US Army Corps of Engineers ®

MARK	DESCRIPTION	DATE

ISSUE DATE: JUNE 2022
CONTRACT NO.: W912PP-22-R-0021

DESIGNED BY: G.MOLLICA
DRAWN BY: G.MOLLICA
CHECKED BY: B. BLACK
SUBMITTED BY:
SIZE: ANSI D
FILENAME:

US ARMY CORPS OF ENGINEERS
ALBUQUERQUE
ALBUQUERQUE, NEW MEXICO

JACOBS
JACOBS ENGINEERING GROUP INC.
777 Main Street
Fort Worth, TX 76102

COMBAT RESCUE HELICOPTER SIMULATOR FACILITY
KIRTLAND AIR FORCE BASE (AFB),
BERNALILLO COUNTY, NEW MEXICO

PARTIAL RENOVATION BUILDING 923
MILLWORK AND DETAILS

SHEET ID
923
I-510

READY TO ADVERTISE

FINISH LEGEND

ITEM CODE	DESCRIPTION	MANUFACTURER	MODEL	COLOR	SIZE	NOTES
FLOORING						
CPT-1	CARPET TILE	SHAW	5T301, KNOTTED TILE	01555, BLENDED	18" x 36"	BRICK INSTALLATION METHOD
EC-1	EPOXY COVERING, 3 COAT SYSTEM	TENNANT	ECO-MPE MULTI PURPOSE EPOXY	BATTLESHIP GREY	...	TOP COAT W/ ECO-HTS 100
LVT-1	LUXURY VINYL TILE	ARMSTRONG	U3064, VIVERO	VINTAGE SILVER, SILVER MOON	6" x 48"	BRICK INSTALLATION METHOD
PFT-1	PORCELAIN TILE	CROSSVILLE	SHADES	AV248, THUNDER	12"x 24"	BRICK SET
SDT-1	STATIC DISSAPATIVE TILE	TARKETT	MINERALITY RUBBER TILE AND PLANK	PA9, BECKA	12' x 24"	SET STRAIGHT
WM-1	WALK -OFF	C/S ACROVYN	PEDIMAT, M1	9301, SILVERADO	...	REPLACE EXISTING
BASE						
PTB-1	PORCELAIN TILE BASE	CROSSVILLE	SHADES	AV248, THUNDER	12" x 24"	COVE BASE
RB-1	RESILIENT BASE	ROPPE	PINNACLE – TYPE TS	123, CHARCOAL	4" HIGH, ROLLED GOODS	STRAIGHT BASE WITH CARPET, COVE BASE LVT WITH RESILIENT FLOORING
WALLS						
PT-1	PAINT	DUNN EDWARDS	EVERSET	DEW340, WHISPER	...	GENERAL USE
PT-2	PAINT	DUNN EDWARDS	EVERSET	DE6377, BOAT ANCHOR	...	ACCENT, DOORS AND TRIM
PT-3	PAINT	DUNN EDWARDS	EVERSET	DE6319, GRAY FLANNEL	...	ACCENT
PWT-1	PORCELAIN TILE	CROSSVILLE	SHADES	AV244, MIST	12' x 24"	SET STRAIGHT
PWT-2	PORCELAIN MOSAIC	CROSSVILLE	SHADES	SBC2, COOL GRAYS	1" x 3" MOSAIC ON 12" x 12" SHEET	SET STRAIGHT
CEILINGS						
ACT-1	ACOUSTICAL CEILING TILE	ARMSTRONG	DUNE	WHITE	24" x 24"	1774, BEVELED TANULAR 9/16" SYSTEM
GYP-1	GYPSUM PAINTED CEILING	DUNN EDWARDS	EVERSET	DEHW08, CLASSIC WHITE	...	
OTS-1	OPEN TO STRUCTURE	DUNN EDWARDS	EVERSET	DEHW08, CLASSIC WHITE		PAINT ALL EXPOSED PIPES, DUCTS, STRUCTURED FRAMING, ETC. STRUCTURED FRAMING, ETC.
WC-1	WOOD CEILING	ARMSTRONG	WOODWORKS GRILLE, 7263BO	WALNUT, GWN	...	12" x 96" x 1 7/8"
MISCELLANEOUS						
CG-1	CORNER GUARD	C/S ACROVYN	SM-20N SURFACE MOUNTED	933, MISSION WHITE	3" x 3"	INSTALL FROM TOP OF BASE, FULL HEIGHT
CR-1	CRASH RAIL	C/S ACROVYN	SCR-48MN	933, MISSION WHITE	6" HIGH	INSTALL CENTERED AT 3'-0" AFF
GR-1	GROUT	LATICRETE	PERMACOLOR GROUT	78 STERLING SILVER	...	USE WITH PFT-1. PTB-1, PWT-1, PWT-2
PL-1	PLASTIC LAMINATE	WILSONART	GLOSS LINE FINISH WITH AEON	8210K-28, PORTICO TEAK	...	BREAK AREA CABINETS
SS-1	SOLID SURFACE COUNTERTOPS	WILSONART	DUSK ICE	9206CE	3/4" THICK	COUNTERTOPS
TP-1	TOILET PARTITION	BRADLEY CORP	BRADMAR SERIES 400	CHARCOAL,162	...	PHENOLIC CORE
WS-1	WINDOW SHADE	MECHOSHADE	EUROTWILL, 6000 SERIES (3% OPEN)	6016, SLATE	...	MANUAL - GENERAL USE UON, 5% OPEN

ROOM FINISH SCHEDULE

ROOM	NAME	FLOOR FINISH	BASE FINISH	WALL FINISH				CEILING FINISH
				NORTH	EAST	SOUTH	WEST	
100	VESTIBULE	WC-1	RB-1	PT-1	PT-1	PT-1	PT-1	EXISTING
101	FORMAL WORK AREA	CPT-1	RB-1	PT-1	PT-1/PT-2	PT-1	PT-1	ACT-1/GYP-1
102	INFORMAL WORK AREA	LVT-1	RB-1	PT-3/PWT-2/SS-1	PT-1	PT-1	PT-3	WC-1
103	ELEC	EC-1	RB-1	PT-1	PT-1	PT-1	PT-1	OTS-1
105	TR	SDT-1	RB-1	PT-3	PT-1	PT-1	PT-1	OTS-1
106	OFFICE	CPT-1	RB-1	PT-3	PT-1	GLASS	PT-1	ACT-1/GYP-1
107	OFFICE	CPT-1	RB-1	PT-3	PT-1	GLASS	PT-1	ACT-1/GYP-1
108	COLLABORATION	CPT-1	RB-1	PT-3	PT-1	GLASS	PT-1	ACT-1/GYP-1
109	COLLABORATION	CPT-1	RB-1	PT-3	PT-1	GLASS	PT-1	ACT-1/GYP-1
110	UNISEX RR	PFT-1	PTB-1	PWT-1/PWT-2, PWT-2	PWT-1/PWT-2, PWT-2	PWT-1/PWT-2, PWT-2	PWT-1/PWT-2, PWT-2	GYP-1
111	UNISEX RR	PFT-1	PTB-1	PWT-1/PWT-2, PWT-2	PWT-1/PWT-2, PWT-2	PWT-1/PWT-2, PWT-2	PWT-1/PWT-2, PWT-2	GYP-1
113	MECHANICAL	EC-1	RB-1	PT-1	PT-1	PT-1	PT-1	OTS-1

GENERAL NOTES-FINISH LEGEND

A	MANUFACTURERS AND COLORS LISTED ARE INTENDED TO ESTABLISH LEVEL OF QUALITY, COLOR & FINISH, AND ARE NOT INTENDED TO LIMIT THE SELECTION OF OTHER MANUFACTURERS FOR EQUAL PRODUCTS.
B	ALL FINISHES ARE TO BE INSTALLED/ APPLIED IN ACCORDANCE WITH THE MANUFACTURER'S WRITTEN INSTRUCTIONS.
C	FIELD VERIFY ALL DIMENSIONS PRIOR TO ORDERING FINISH MATERIALS.
D	ALL FLOORING TRANSITIONS ARE TO OCCUR AT THE CENTERLINE OF THE DOOR, DOORWAY, OR CEILING UON.
E	GYPSUM BOARD WALLS ARE TO HAVE A LIGHT ORANGE PEEL TEXTURE.
F	PAINTED GYPSUM BOARD WALLS SHALL HAVE AN EGGSHELL FINISH UON.
G	PAINTED GYPSUM BOARD CEILINGS ARE TO HAVE A FLAT FINISH UON.
H	DOORS AND FRAMES SCHEDULED TO BE PAINTED SHALL HAVE A SEMI GLOSS FINISH UON.
I	REFER TO REFLECTED CEILING PLANS FOR ADDITIONAL INFORMATION.
J	RUBBER REDUCER STRIPS/ TRANSITIONS WHERE SPECIFIED ARE TO MATCH ADJACENT RESILIENT BASE COLOR.
K	WHEN INSTALLING TILE, USE ALL APPLICABLE MATCHING TRIM PIECES; I.E. INSIDE AND OUTSIDE CORNERS AND EDGES. LEAVE NO EXPOSED TILE EDGES.
L	ROOM FINISH SCHEDULE AND FINISH PLAN ON SHEET IN110 FOR FINISHES BY ROOM.
M	REFER TO ARCHITECTURE DRAWINGS FOR EXTERIOR FINISHES.

US Army Corps of Engineers ®

MARK	DESCRIPTION	DATE

ISSUE DATE: JUNE 2022
CONTRACT NO.: W912PP-22-R-0021

DESIGNED BY: G.MOLLICA
DRAWN BY: G.MOLLICA
CHECKED BY: S. LEBEAU
SUBMITTED BY: E. OLNESS
SIZE: ANSI D
FILENAME: KA69-923-I-610

US ARMY CORPS OF ENGINEERS
ALBUQUERQUE
ALBUQUERQUE, NEW MEXICO

JACOBS
JACOBS ENGINEERING GROUP INC.
777 Main Street
FORT WORTH, TX 76102

COMBAT RESCUE HELICOPTER SIMULATOR FACILITY
KIRTLAND AIR FORCE BASE (AFB)
BERNALILLO COUNTY, NEW MEXICO

PARTIAL RENOVATION BUILDING 923

FINISH MATERIAL LEGEND/ ROOM FINISH SCHEDULE

STATE OF TEXAS
JERI L. CHAMPINE
629
REGISTERED
INTERIOR DESIGNER
6.24.2021

SHEET ID
923
I-610

READY TO ADVERTISE

SIGNAGE SCHEDULE

SIGN	ROOM NAME	ROOM NUMBER	VERBIAGE	SIGN TYPE	DETAIL	INT/EXT
S1	UNISEX RR	110	RESTROOM	BB7C	C1/I-611	INTERIOR
S2	UNISEX RR	111	RESTROOM	BB7C	C1/I-611	INTERIOR
S3	MECHANICAL	113	MECHANICAL	BB3	A1/I-611	EXTERIOR
S5	OFFICE	107	OFFICE	BB2B	A5/I-611	INTERIOR
S6	COLLABORATION	108	COLLABORATION	BB2B	A5/I-611	INTERIOR
S7	COLLABORATION	109	COLLABORATION	BB2B	A5/I-611	INTERIOR
S8	TR	105	TR	BB2A	A1/I-611	INTERIOR
S9	ELEC	103	ELECTRIAL	BB2A	A1/I-611	INTERIOR

BB7C

ROOM NUMBER: HELVETICA NEUE 55 ROMAN, 1-1/2" TACTILE ROOM NUMBER WITH GRADE TWO BRAILLE.

ROOM NAME: UPPER CASE HELVETICA NEUE 55 ROMAN, 1" CAPITAL LETTER HEIGHT, FLUSH LEFT, ACCOMPANIED BY GRADE TWO BRAILLE.

ROOM NAME TO BE WHITE TEXT ON A COLORED BACKGROUND AND SYMBOLS TO BE COLORED ON A WHITE BACKGROUND.

C1 RESTROOM IDENTIFICATION SIGN BB7

3" = 1'-0"

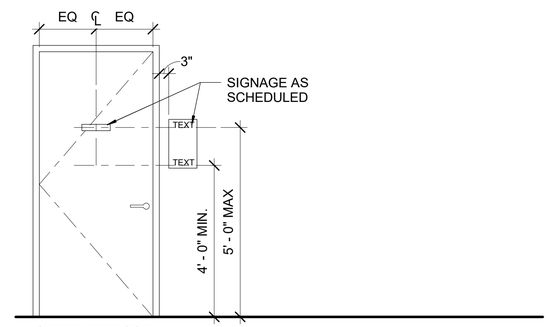

STANDARD DOOR

MOUNTING HEIGHT RANGE FOR TACTILE CHARACTERS.
DOOR MOUNTED SIGNS TO BE CENTERED ON DOOR WHERE APPLICABLE.
ALL SIMILAR SIGN TYPES TO BE MOUNTED UNIFORMLY THROUGHOUT BUILDING.

C5 TYPICAL SIGNAGE MOUNTING DIAGRAM

1/2" = 1'-0"

ROOM NUMBER: HELVETICA NEUE 55 ROMAN, 1-1/2" CAPITAL LETTER HEIGHT, FLUSH LEFT, TACTILE ROOM NUMBER ACCOMPANIED BY GRADE TWO BRAILLE

ROOM NAME: HELVETICA NEUE 55 ROMAN, 3/4" CAPITAL LETTER HEIGHT, FLUSH LEFT. TACTILE ROOM NAME WITH GRADE TWO BRAILLE.

SIGN SHALL HAVE REMOVABLE END CAPS (1/4") EACH SIDE WHITE LETTERS ON COLORED BACKGROUND.

A1 PERMANENT ROOM IDENTIFICATION SIGN BB2A/BB3

3" = 1'-0"

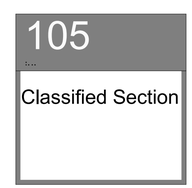

ROOM NUMBER: HELVETICA NEUE 55 ROMAN, 1 1/2" CAPITAL LETTER HEIGHT, FLUSH LEFT, TACTILE ROOM NUMBER ACCOMPANIED BY GRADE TWO BRAILLE

ROOM NAME: PRINTED PAPER INSERT WITH ROOM DESCRIPTION. UPPER AND LOWER CASE HELVETICA NEUE 55 ROMAN, 3/4" CAPITAL LETTER HEIGHT, FLUSH LEFT.

SIGN SHALL HAVE REMOVABLE END CAPS (1/4") EACH SIDE.

A5 ROOM IDENTIFICATION SIGN BB2B

3" = 1'-0"

GENERAL NOTES - SIGNAGE

A	SIGNAGE LOCATION/PLACEMENT TO MEET ABA AS REQUIREMENTS.
B	SIGNAGE BACKGROUND COLOR AND TEXT TO MATCH EXISTING SIGNAGE FINISHES.
C	ALL SIGNAGE TO COMPLY WITH UFC 3-120-01 STANDARDS.
D	ROOM NUMBERS SHOWN ON PLANS ARE FOR CONSTRUCTION PURPOSES, NOT NECESSARILY THE USER'S PREFERRED NUMBERING SYSTEM. COORDINATE ALL ROOM NUMBERS AND VERBIAGE FOR SIGNS WITH CONTRACTING OFFICER PRIOR TO FABRICATION.
E	KNOWN SIGNAGE IS DOCUMENTED ON THESE DRAWINGS. VERIFY AND PROVIDE ANY ADDITIONAL REGULATORY SIGNAGE /GRAPHICS REQUIRED BY LOCAL CODE.
F	ENSURE THAT ALL SIGN INSERTS CAN BE EASILY REMOVED/ REPLACED. CONSIDER INSTALLATION OF SIGNS IN TIGHT CORNERS AND ALCOVES/ SIDELIGHTS TO ENSURE THAT SIGN INSERT IS ACCESSIBLE.
G	MOUNT ALL LIKE-SIGNS AT SAME HEIGHT.

GRAPHIC SCALE

6 4 2 0 6
SCALE: 3"=1'-0"
2 1 0 2 4
SCALE: 1/2"=1'-0"

STATE OF TEXAS
JERI L. CHAMPINE
629
REGISTERED
INTERIOR DESIGNER
6.24.2021

US Army Corps of Engineers ®

MARK	DESCRIPTION	DATE

DESIGNED BY: G.MOLLICA
DRAWN BY: G.MOLLICA
CHECKED BY: S. LEBEAU
SUBMITTED BY: E. OLMESS
SIZE: ANSI D
FILENAME: K4089-923-I-611
ISSUE DATE: JUNE 2022
CONTRACT NO.: W912PP-22-R-0021

US ARMY CORPS OF ENGINEERS
ALBUQUERQUE
ALBUQUERQUE, NEW MEXICO

JACOBS
JACOBS ENGINEERING GROUP INC.
777 Main Street
Fort Worth, Texas 76102

COMBAT RESCUE HELICOPTER SIMULATOR FACILITY
KIRTLAND AIR FORCE BASE (AFB)
BERNALILLO COUNTY, NEW MEXICO
PARTIAL RENOVATION BUILDING 923
SIGNAGE SCHEDULE/SIGNAGE DETAILS

SHEET ID
923
I-611

READY TO ADVERTISE

SYMBOLS

FIRE ALARM SYMBOLS

FACP	EXISTING ADDRESSABLE FIRE ALARM CONTROL PANEL
RPS	REMOTE/AUXILARY NOTIFICATION POWER SUPPLY
RTP	EXISTING FIRE ALARM RADIO TRANSMITTER
	CEILING-MOUNTED FIRE ALARM SPEAKER/STROBE WITH CLEAR LENS AND WHITE FACEPLATE MARKED "ALERT".
	WALL-MOUNTED FIRE ALARM HORN/STROBE WITH CLEAR LENS AND WHITE FACEPLATE MARKED "ALERT". RECESS MOUNT IN FINISHED ROOMS.
P	DOUBLE ACTION MANUAL FIRE ALARM PULL STATION. PULL STATIONS TO COMPLY WITH THE AMERICANS WITH DISABILITIES ACT (ADA).
	PHOTOELECTRIC SMOKE DETECTOR
M	ADDRESSABLE MONITOR MODULE
C	ADDRESSABLE CONTROL RELAY MODULE

MISCELLANEOUS

000	NOTE BY SYMBOL REFERENCE

DRAWING REFERENCE

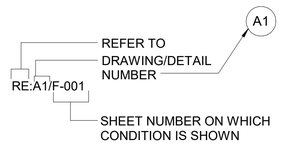

GENERAL NOTES

FIRE SPRINKLER SYSTEM NOTES

A. EXISTING BUILDING IS NOT PROTECTED BY AN AUTOMATIC SPRINKLER SYSTEM. IN ACCORDANCE WITH THE REQUIREMENTS OF UFC 3-600-01 7 FEB 2020, CHANGE 4, 10 MAY 2019, CHAPTER 34, THE MODIFICATION TO THE EXISTING BUILDING IS NOT REQUIRED TO BE PROTECTED BY AN AUTOMATIC SPRINKLER SYSTEM.

FIRE ALARM SYSTEM NOTES

A. EXTEND EXISTING FIRE ALARM SYSTEM TO PROVIDE COMPLETE COVERAGE IN BUILDING 923 MODIFICATION DESIGNED AND INSTALLED IN ACCORDANCE WITH 2019 NFPA 72, UFC 3-600-01 SECTION 34-1.4.5, AND ADA/ABA REQUIREMENTS FOR NEW CONSTRUCTION.

B. MONITOR ALL FIRE ALARM, TROUBLE AND SUPERVISORY SIGNALS WITH EXISTING FIRE ALARM CONTROL PANEL.

C. PROVIDE CONNECTIONS TO THE POWER SERVICE IN ACCORDANCE WITH NFPA 72.

D. PROVIDE POWER LIMITED FIRE ALARM CIRCUITS.

E. PROVIDE 18 AWG MINIMUM SIGNALING LINE CIRCUITS.

F. PROVIDE 16 AWG MINIMUM INITIATING DEVICE AND NOTIFICATION APPLIANCE CIRCUITS.

G. INSTALL ALL NEW WIRING IN MINIMUM 3/4 INCH CONDUIT.

H. PROVIDE CLASS B SIGNALING LINE CIRCUITS, CLASS B INITATING DEVICE CIRCUITS, AND CLASS B NOTIFICATION APPLIANCE CIRCUITS PER UFC 3-600-01.

I. DO NOT LOCATE SMOKE DETECTORS IN DIRECT AIR OR CLOSER THAN 36 INCHES FROM AN AIR SUPPLY OR RETURN DIFFUSER.

J. MOUNT THE OPERABLE PART OF MANUAL PULL STATIONS AT 48 INCHES AFF.

K. MOUNT ALL WALL-MOUNTED NOTIFICATION APPLIANCES WITH THE BOTTOM OF THE STROBE LENS AT 80 INCHES AFF, OR 6 INCHES BELOW THE CEILING, WHICHEVER IS LOWER.

L. PROVIDE FIRE ALARM DEVICES WITH WHITE FACEPLATES THROUGHOUT FINISHED AREAS OF THE BUILDING MARKED "ALERT" PER UFC 3-600-01.

M. FIRE ALARM INITIATING DEVICES ARE SHOWN IN SUGGESTED LOCATIONS. FINAL QUANTITY AND LAYOUT SHALL BE IN ACCORDANCE WITH ALL APPLICABLE CODES, MANUFACTURER'S RECOMMENDATIONS, SPECIFICATION SECTION 28 31 64.00 10, AND EQUIPMENT LISTINGS. COORDINATE LOCATIONS WITH LIGHTING AND AIR HANDLING SYSTEMS.

N. THESE DOCUMENTS DEPICT A PERFORMANCE LEVEL ENGINEERING DESIGN LAYOUT TO BE UTILIZED AS GUIDANCE FOR THE PLANNING OF THE FIRE ALARM SYSTEMS BY THE CONTRACTOR. PROVIDE COMPLETE DOCUMENTS FOR REVIEW AND APPROVAL FROM THE ENGINEER AND THE AUTHORITY HAVING JURISDICTION PRIOR TO INSTALLATION. INCLUDE IN SHOP DRAWINGS AND CALCULATIONS ANY ADDITIONAL EQUIPMENT NECESSARY, INCLUDING INITIATING DEVICES AND NOTIFICATION APPLIANCES, TO PROVIDE A COMPLETE INSTALLATION AND COMPLY WITH BASE STANDARDS.

WILLIAM ALLAN CLAY
NEW MEXICO
24233
PROFESSIONAL ENGINEER
Jun 23 2021

US Army Corps of Engineers ®

MARK	DESCRIPTION	DATE

DESIGNED BY: R. DIBLE
DRAWN BY: Z. HARRELL
CHECKED BY: W. CLAY
SUBMITTED BY: E. OLMESS
SIZE: ANSI D
ISSUE DATE: JUNE 2022
CONTRACT NO.: W912PP-22-R-0021
FILENAME: K486-923-F-001

US ARMY CORPS OF ENGINEERS
ALBUQUERQUE
ALBUQUERQUE, NEW MEXICO

JACOBS
JACOBS ENGINEERING GROUP INC.
777 Main Street
Fort Worth, TX 76102

COMBAT RESCUE HELICOPTER SIMULATOR FACILITY
KIRTLAND AIR FORCE BASE (AFB)
BERNALILLO COUNTY, NEW MEXICO
PARTIAL RENOVATION BUILDING 923
GENERAL NOTES AND SYMBOLS

SHEET ID
923
F-001

READY TO ADVERTISE

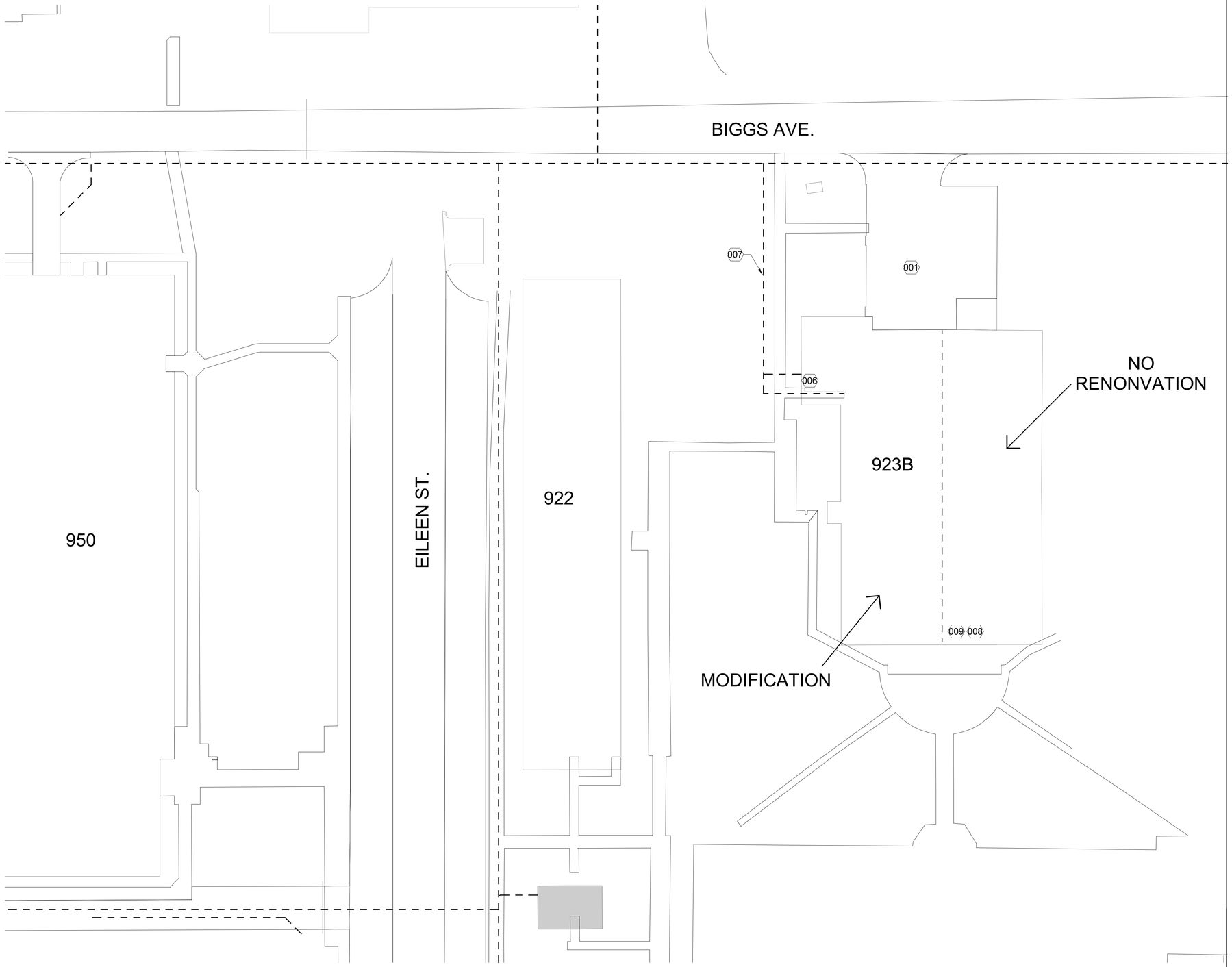

A1 FIRE PROTECTION CODE COMPLIANCE SITE PLAN
1/2" = 1'-0"

KEYNOTES

001	FIRE DEPARTMENT VEHICLE ACCESS TO BUILDING.
006	FIRE SERVICE MAIN SERVING 923 BUILDING.
007	10 INCH WATER MAIN.
008	MAIN ENTRANCE.
009	FIRE ALARM MASS NOTIFICATION PANEL.

US Army Corps of Engineers ®

MARK	DESCRIPTION	DATE

DESIGNED BY: R. DIBLE
DRAWN BY: Z. HARRELL
CHECKED BY: W. CLAY
SUBMITTED BY:
SIZE: ANSI D
FILENAME:
ISSUE DATE: JUNE 2022
CONTRACT NO.: W912PP-22-R-0021

US ARMY CORPS OF ENGINEERS
ALBUQUERQUE
ALBUQUERQUE, NEW MEXICO

JACOBS
JACOBS ENGINEERING GROUP INC.
777 Main Street
Fort Worth, TX 76102

COMBAT RESCUE HELICOPTER SIMULATOR FACILITY
KIRTLAND AIR FORCE BASE (AFB),
BERNALILLO COUNTY, NEW MEXICO
PARTIAL RENOVATION BUILDING 923
FIRE PROTECTION CODE COMPLIANCE SITE PLAN

WILLIAM ALLAN CLAY
NEW MEXICO
24233
PROFESSIONAL ENGINEER
Jun 23 2021

SHEET ID
923
F-002

READY TO ADVERTISE

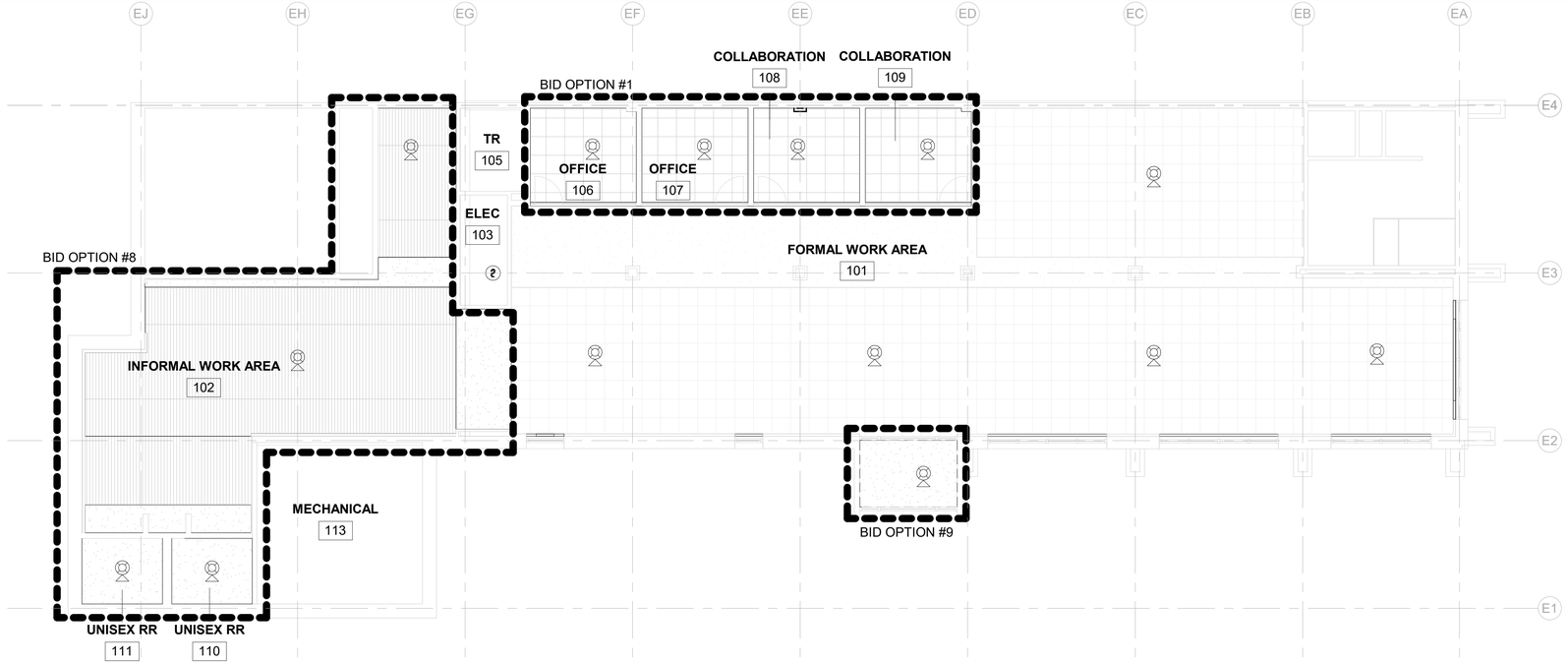

D1 FIRE ALARM PLAN - BID OPTIONS
1/8" = 1'-0"

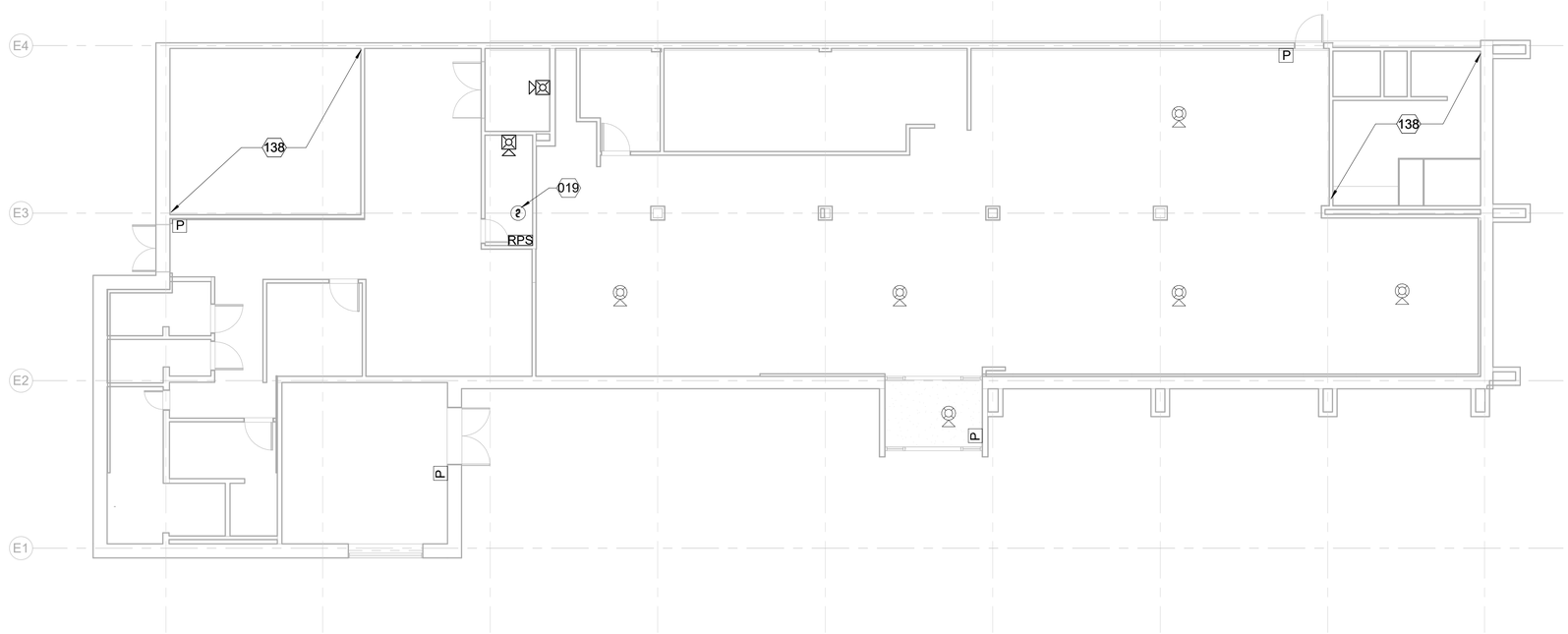

A1 FIRE ALARM PLAN - BASE BID
1/8" = 1'-0"

GENERAL NOTES - FIRE ALARM

A	SEE SHEET F-001 FOR GENERAL NOTES AND SYMBOLS.
B	SEE SHEET FA501 FOR FIRE ALARM DETAILS.
C	EXISTING FACP LOCATED IN LOBBY OF EXISTING BUILDING (NOT SHOWN ON PLANS).
D	WORK SHOWN IS NEW SCOPE FOR PORTION OF BLDG 923 BEING MODIFIED. EXISTING TO REMAIN NOT SHOWN. REFER TO AD110 AND AD111 FOR FURTHER INFORMATION.
E	REFER TO ARCHITECTURAL DRAWINGS FOR BASE BID AND DEMOLITION OPTIONS.

KEYNOTES

019	SMOKE DETECTOR ABOVE RPS PER NFPA 72.
138	ADJACENT TENANT; NOT IN SCOPE.

KEY PLAN

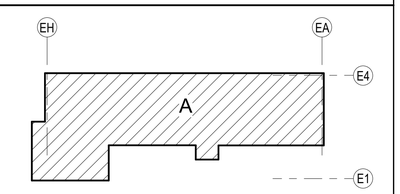

GRAPHIC SCALE

8 0 8 16
Scale: 1/8 INCH = 1 FOOT

PROJECT NORTH

PLAN NORTH

WILLIAM ALLAN CLAY
NEW MEXICO
24233
PROFESSIONAL ENGINEER
Jun 23 2021

US Army Corps of Engineers ®

MARK	DESCRIPTION	DATE

DESIGNED BY: R. DIBLE
DRAWN BY: Z. HARRELL
CHECKED BY: W. CLAY
SUBMITTED BY: E. OLMESS
SIZE: ANSI D
ISSUE DATE: JUNE 2022
CONTRACT NO.: W912PP-22-R-0021
FILENAME: KAB923-FA110

US ARMY CORPS OF ENGINEERS
ALBUQUERQUE
ALBUQUERQUE, NEW MEXICO

JACOBS
JACOBS ENGINEERING GROUP INC.
777 Main Street
Fort Worth, TX 76102

COMBAT RESCUE HELICOPTER SIMULATOR FACILITY
KIRTLAND AIR FORCE BASE (AFB)
BERNALILLO COUNTY, NEW MEXICO

PARTIAL RENOVATION BUILDING 923
OVERALL FIRE ALARM PLAN

SHEET ID
923
FA110

READY TO ADVERTISE

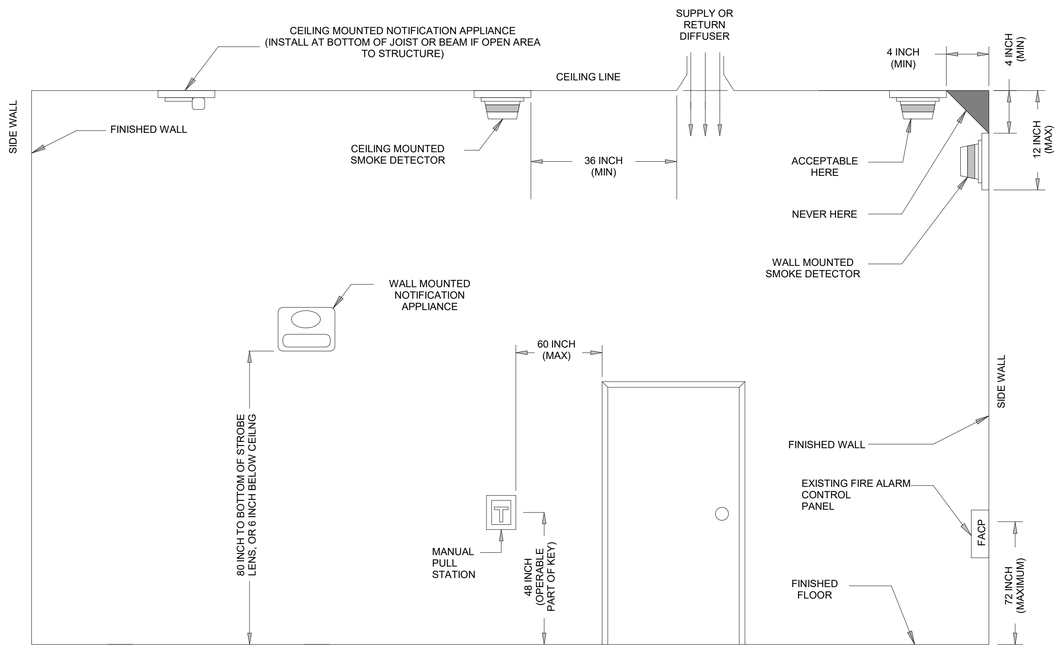

D1 DEVICE MOUNTING DETAIL

N.T.S.

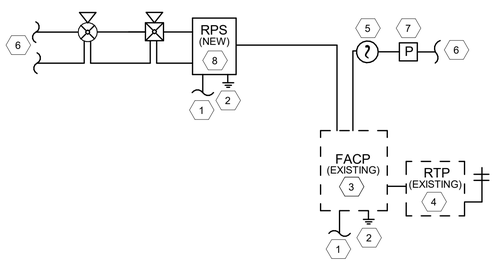

NOTES BY SYMBOL

1. CONNECT TO 120 VAC, 20 AMP DEDICATED CIRCUITS.
2. PROVIDE GROUNDING PER NFPA 70.
3. EXISTING FIRE ALARM CONTROL PANEL LOCATED IN EXISTING BUILDING TO REMAIN.
4. EXISTING FIRE ALARM RADIO TRASNMITTER LOCATED IN EXISTING BUILDING TO REMAIN.
5. PROVIDE SMOKE DETECTION ABOVE REMOTE POWER SUPPLY.
6. PROVIDE CLASS B SIGNALING LINE CIRCUITS, CLASS B INITATING DEVICE CIRCUITS, AND CLASS B NOTIFICATION APPLIANCE CIRCUITS PER UFC 3-600-01.
7. PROVIDE MANUAL PULL STATION WITHIN 5 FEET AT ALL EXTERIOR DOORS PER NFPA 72
8. PROVIDE NEW REMOTE POWER SUPPLY.

A1 FIRE ALARM RISER DIAGRAM

N.T.S.

SYSTEM OUTPUTS		
CONTROL UNIT ANNUNCIATION	NOTIFICATION	FACP FUNC

SYSTEM INPUT	A	B	C	D	E	F	G	H	I	J	K	L	M	
	ACTUATE COMMON ALARM SIGNAL INDICATOR AND AUDIBLE	DISPLAY ALARM DEVICE AND CHANGE OF STATUS	ACTUATE SUPERVISORY INDICATOR AND AUDIBLE	DISPLAY SUPERVISORY CONDITION AND CHANGE OF STATUS	ACTUATE COMMON TROUBLE SIGNAL INDICATOR AND AUDIBLE	DISPLAY TROUBLE CONDITION AND CHANGE OF STATUS	TRANSMIT FIRE ALARM SIGNAL TO RADIO TRANSCEIVER AND BASE REPORTING SYSTEM	TRANSMIT SUPERVISORY SIGNAL TO RADIO TRANSCEIVER AND BASE REPORTING SYSTEM	TRANSMIT TROUBLE SIGNAL TO RADIO TRANSCEIVER AND BASE REPORTING SYSTEM	ACTUATE FIRE ALARM NOTIFICATION STROBES AND AUDIBLES THROUGHOUT THE BUILDING	SILENCE PANEL AND BUILDING FIRE ALARM AUDIBLE/VISUAL NOTIFICATION APPLIANCES STOP	CONTROL PANEL RETURNS TO NORMAL (AUDIBLES AND VISUALS STOP)		
ALARM DEVICES														
1 MANUAL PULL STATION	●	●					●				●			1
2 SMOKE DETECTOR	●	●					●				●			2
SUPERVISORY DEVICES														
3 HVAC EMERGENCY SHUTDOWN SWITCH			●	●				●						3
TROUBLE FUNCTIONS														
4 FIRE ALARM AC POWER FAILURE					●	●			●					4
5 FIRE ALARM SYSTEM LOW BATTERY					●	●			●					5
6 OPEN CIRCUIT					●	●			●					6
7 GROUND FAULT					●	●			●					7
8 NOTIFICATION APPLIANCE CIRCUIT SHORT					●	●			●					8
PANEL FUNCTIONS														
9 SYSTEM SILENCE												●		9
10 SYSTEM RESET													●	10
	A	B	C	D	E	F	G	H	I	J	K	L	M	

A5 FIRE ALARM SEQUENCE OF OPERATIONS

N.T.S.

WILLIAM ALLAN CLAY
NEW MEXICO
24233
PROFESSIONAL ENGINEER
Jun 23, 2021

US Army Corps of Engineers ®

MARK	DESCRIPTION	DATE

DESIGNED BY: R. DIBLE
DRAWN BY: Z. HARRELL
CHECKED BY: W. CLAY
SUBMITTED BY: E. OLMESS
SIZE: ANSI D
FILENAME: K469-923-FA501
ISSUE DATE: JUNE 2022
CONTRACT NO.: W912PP-22-R-0021

US ARMY CORPS OF ENGINEERS
ALBUQUERQUE
ALBUQUERQUE, NEW MEXICO

JACOBS
JACOBS ENGINEERING GROUP INC.
777 Main Street
Fort Worth, TX 76102

COMBAT RESCUE HELICOPTER SIMULATOR FACILITY
KIRTLAND AIR FORCE BASE (AFB),
BERNALILLO COUNTY, NEW MEXICO

PARTIAL RENOVATION BUILDING 923
FIRE ALARM DETAILS

SHEET ID
923
FA501

READY TO ADVERTISE

DRAWING ABBREVIATIONS

A	----------
ABV	ABOVE
AD	AIR DEVICE
ADJ	ADJUSTABLE
AFC	ABOVE FINISHED CEILING
AFF	ABOVE FINISHED FLOOR
AFG	ABOVE FINISHED GRADE
AHU	AIR HANDLING UNIT
ANSI	AMERICAN NATIONAL STANDARD INSTITUTE
ARCH	ARCHITECT, ARCHITECTURAL
ARI	AIR CONDITIONING & REFRIG. INSTITUTE
ASHRAE	AMERICAN SOCIETY OF HEATING, REFRIG. AND AIR CONDITIONING ENGINEERS
ASME	AMERICAN SOCIETY OF MECHANICAL ENGINEERS
ASPE	AMERICAN SOCIETY OF PLUMBING ENGINEERS
ASSE	AMERICAN SOCIETY OF SANITARY ENGINEERS
ASTM	AMERICAN SOCIETY OF TESTING AND MATERIALS
B	----------
BFF	BELOW FINISHED FLOOR
BFP	BACKFLOW PREVENTER
BLDG	BUILDING
BOD	BOTTOM OF DUCT
BOP	BOTTOM OF PIPE
BOS	BOTTOM OF STRUCTURE
C	----------
CFH	CUBIC FEET PER HOUR
CIRC	CIRCULATING
CLG	CEILING
CO	CLEANOUT
CP	CIRC. PUMP
D	----------
DCBFP	DOUBLE CHECK BACKFLOW PREVENTER
DCW	DOMESTIC COLD WATER
DHW	DOMESTIC HOT WATER
DN	DOWN
DWG	DRAWING
E	----------
(E)	EXISTING
EA	EXHAUST AIR, EACH
EF	EXHAUST FAN
ELEC	ELECTRICAL
ET	EXPANSION TANK
EWC	ELECTRIC WATER COOLER
EX	EXHAUST
F	----------
FA	FROM ABOVE
FB	FROM BELOW
FCO	FLOOR CLEANOUT
FLA	FULL LOAD AMPS
FS	FLOOR SINK, FLOW SWITCH
G	----------
GPM	GALLONS PER MINUTE
H	----------
HB	HOSE BIBB
HTG	HEATING
I	----------
IE	INVERT ELEVATION
IEEE	INSTITUTE OF ELECTRICAL AND ELECTRONICS ENGINEERS
IN WC	INCHES OF WATER COLUMN
J	----------
J-BOX	JUNCTION BOX
JT	JOINT
K	----------
K	CONDUCTIVITY (BTU/SF/1" THICKNESS)
KW	KILOWATT
KWH	KILOWATT-HOUR
L	----------
L	LAVATORY
LVR	LOUVER
M	----------
MECH	MECHANICAL
MFGR	MANUFACTURER
MS	MOP SINK
N	----------
NC	NOISE CRITERIA, NORMALLY CLOSED
NEC	NATIONAL ELECTRICAL CODE
NEMA	NATIONAL ELECTRICAL MFGR'S ASSOC.
NFPA	NATIONAL FIRE PROTECTION ASSOCIATION
NIC	NOT IN CONTRACT
NO	NORMALLY OPEN
NTS	NOT TO SCALE
O	----------
OA	OUTDOOR AIR
OSHA	OCCUPATIONAL SAFETY AND HEALTH ADMIN.
P	----------
PD	PRESSURE DROP
PLBG	PLUMBING
PROVIDE	FUNISH AND INSTALL
Q	----------
QTY	QUANTITY
R	----------
RA	RETURN AIR
RE:	REFERENCE, REFER
REQD	REQUIRED
REV	REVISION, REVISE
RTN	RETURN
S	----------
S	SINK
SA	SUPPLY AIR
SH	SHOWER
SPEC	SPECIFICATION
SS	SANITARY SEWER
STD	STANDARD
T	----------
TYP	TYPICAL
U	----------
U	URINAL
UF	UNDERFLOOR
UL	UNDERWRITERS LABORATORIES, INC.
UON	UNLESS OTHERWISE NOTED
V	----------
V	VENT
VERT	VERTICAL
VTR	VENT THROUGH ROOF
W	----------
WC	WATER CLOSET
WH	WATER HEATER

LEGEND

PIPING SYMBOLS

- X % — PITCH DOWN IN DIRECTION OF ARROW AT SPECIFIED PERCENT SLOPE
- DIRECTION OF FLOW
- PIPE ANCHOR
- PIPE GUIDE
- CONCENTRIC REDUCER
- BRANCH - SIDE CONNECTION
- BRANCH - TOP CONNECTION
- BRANCH - BOTTOM CONNECTION
- RISE OR DROP IN PIPE
- RISER DOWN (ELBOW)
- RISER UP (ELBOW)
- CAPPED PIPE
- BLIND FLANGE
- UNION (THREADED)
- ORIFICE UNION
- FLANGED CONNECTION
- FLANGED ORIFICE
- TEMPERATURE & PRESSURE PORT
- STRAINER WITH BLOWDOWN VALVE
- FLEX PIPE
- FLEX CONNECTION
- PUMP
- LINE/WALL CLEANOUT
- CLEANOUT
- HOSE BIBB, WALL HYDRANT
- FLOOR DRAIN, FLOOR SINK
- P-TRAP
- PLUMBING FIXTURES AND EQUIPMENT
- X — METER; X=W FOR WATER, X=G FOR GAS
- BACKFLOW PREVENTER
- P 1 — RISER DESIGNATION DENOTING ASSOCIATED SANITARY OR DOMESTIC WATER RISER DIAGRAM
- PROCESS VACUUM CONNECTION
- BREATHING AIR CONNECTION
- PROCESS COMPRESSED AIR CONNECTION
- DEBRIS VACUUM CONNECTION
- A — AIR OUTLET VALVE
- KEYNOTE REFERENCE
- POINT OF CONNECTION TO EXISTING
- POINT OF DISCONNECTION FROM EXISTING
- WATER HAMMER ARRESTOR
- FS — FLOW SWITCH
- PS — PRESSURE SWITCH
- THERMOMETER
- PRESSURE GAGE WITH COCK

VALVE SYMBOLS

- GATE VALVE
- GLOBE VALVE
- CHECK VALVE (NON SLAM)
- PLUG VALVE
- PRESSURE REDUCING VALVE (PRV)
- BUTTERFLY VALVE
- BALL VALVE
- NEEDLE VALVE
- VENTURI FLOW METER
- VALVE IN DROP
- VALVE IN CENTER DROP
- VALVE IN RISE
- GATE VALVE W/ 3/4" HOSE THREAD ADAPTER
- S — SOLENOID VALVE
- TWO-WAY CONTROL VALVE
- THREE-WAY CONTROL VALVE
- SAFETY VALVE OR PRESSURE RELIEF VALVE
- MANUAL BALANCING VALVE
- AUTOMATIC BALANCING VALVE
- TEMPERATURE WELL
- FLANGED VALVE (GATE VALVE SHOWN)

PIPING TYPES

SS	SANITARY SEWER
	SANITARY VENT (V)
	DOMESTIC COLD WATER (DCW)
	DOMESTIC HOT WATER (DHW)
	DOMESTIC HOT WATER RETURN (DHWR)
140°	DOMESTIC HOT WATER (140°F)
NPW	NON POTABLE WATER
TP	TRAP PRIMER
G	NATURAL GAS
CD	CONDENSATE DRAIN
A	COMPRESSED AIR
DV	DEBRIS VACUUM (CLEANING)
VAC	VACUUM
BA	BREATHING AIR
OD	OVERFLOW DRAIN
SD	STORM DRAIN

EQUIPMENT SYMBOLS

- NEW EQUIPMENT
- EQUIPMENT CLEARANCE
- DEMOLISHED EQUIPMENT

DESIGN CRITERIA

WATER SERVICE FLOW TEST DATA

WATER PIPE SIZES ARE BASED ON A MINIMUM WORKING PRESSURE OF 35 PSIG AT A FLOW RATE OF 6 GPM AT THE POINT OF CONNECTION TO THE EXISTING DOMESTIC COLD WATER SYSTEM.

STORM DRAINAGE DATA

THE EXISTING STORM DRAINAGE SYSTEM WILL BE UNALTERED BY THIS PROJECT.

ENERGY CODE COMPLIANCE

PLUMBING FIXTURES ARE IN COMPLIANCE WITH ASHRAE 90.1-2016, ASHRAE 189.1-2014 AND UFC 1-200-02 HIGH PERFORMANCE AND SUSTAINABLE BUILDING REQUIREMENTS.

PLUMBING CODE COMPLIANCE

THE PLUMBING SYSTEMS ARE DESIGNED IN COMPLIANCE WITH 2018 INTERNATIONAL PLUMBING CODE AS MODIFIED BY UFC 3-420-01 PLUMBING SYSTEMS.

GENERAL NOTES

A MANUFACTURER PRODUCTS INDICATED ESTABLISHES A MINIMUM LEVEL OF ACCEPTABLE QUALITY. IT IS NOT INTENDED TO LIMIT THE SELECTION OF APPROVED EQUIVALENT PRODUCTS.

B REFER TO SPECIFICATIONS FOR MATERIALS AND METHODS FOR CONSTRUCTION.

C COORDINATE THE EXACT LOCATION OF FLOOR DRAINS WITH THE ARCHITECTURAL DRAWINGS AND MECHANICAL EQUIPMENT LOCATIONS PRIOR TO INSTALLATION OF DRAINS. PROVIDE A RADIUS AROUND THE FLOOR DRAIN THAT SLOPES TOWARD THE FLOOR DRAIN FROM THE FINISHED FLOOR ELEVATION TO A TOP OF DRAIN ELEVATION BETWEEN 1/2" AND 3/4" BELOW FINISHED FLOOR, UNLESS OTHERWISE NOTED ON THE DRAWINGS. THE RADIUS AND RATE OF SLOPE IS TO BE FIELD COORDINATED.

D FURNISH ACCESS DOORS FOR INSTALLATION IN WALLS AND CEILINGS WHERE ACCESS IS REQUIRED TO CONCEALED PLUMBING EQUIPMENT, VALVES, CONTROLS, AND OTHER DEVICES.

E PERFORM WORK IN ACCORDANCE WITH THE LATEST EDITIONS, REVISIONS, AMENDMENTS OR SUPPLEMENTS OF APPLICABLE STATUTES, ORDINANCES, CODES, OR REGULATIONS OF FEDERAL, STATE AND LOCAL AUTHORITIES HAVING JURISDICTION IN EFFECT ON THE DATE BIDS ARE RECEIVED.

F WHERE APPROVAL CODES HAVE BEEN ESTABLISHED BY OSHA, UNDERWRITERS LABORATORY, AMERICAN CODES, ANSI, ASME, ASPE, ASA, ASHRAE, ASSE, ASTM, ARI, NEC, NFPA, SMACNA, OR THE STATE FIRE INSURANCE REGULATORY BODY, FOLLOW THESE STANDARDS WHETHER OR NOT INDICATED ON THE DRAWINGS.

G COORDINATE WORK WITH ARCHITECTURAL FEATURES AND COORDINATE WORK SUCH THAT INTERFERENCES BETWEEN PIPING, DUCTWORK, EQUIPMENT, PLUMBING WORK, ELECTRICAL WORK, FIRE PROTECTION WORK, AND BUILDING STRUCTURE WILL BE AVOIDED.

H PROVIDE THE ENTIRE SYSTEM AND ITS COMPONENT ITEMS OF EQUIPMENT IN OPERATING CONDITION WITHOUT OBJECTIONABLE VIBRATION OR NOISE. PROVIDE WATER HAMMER ARRESTORS AT RESTROOM PLUMBING CHASES. NOISE LEVELS IN OFFICES SHALL BE MAINTAINED AT OR BELOW NC35.

J DO NOT SCALE THE DRAWINGS FOR CONSTRUCTION PURPOSES.

K PROVIDE ALL WIRING AND ELECTRICAL CONTROLS IN ACCORDANCE WITH NFPA 70 (NEC).

L INSTALL PIPING TO PROVIDE THE MAXIMUM POSSIBLE CLEAR HEIGHT UNDERNEATH. MAINTAIN A MINIMUM OF 6 INCHES ABOVE FINISHED CEILING TO PROVIDE CLEARANCE FOR LIGHTING FIXTURES.

M CONTRACTOR TO MAKE ALL FINAL CONNECTIONS TO EQUIPMENT.

N ALL DRY VENTS SHALL RISE VERTICALLY (45 DEG. ANGLE OR GREATER FROM HORIZONTAL) TO A MINIMUM OF 6" ABOVE THE FLOOD LEVEL RIM OF THE HIGHEST FIXTURE SERVED BY THE VENT. VENT TERMINALS SHALL EXTEND A MINIMUM OF 10" ABOVE THE FINISHED ROOF AND SHALL BE LOCATED A MINIMUM OF 10 FEET HORIZONTALLY FROM ANY DOOR, OPERABLE WINDOW, OR OTHER AIR INTAKE OF THE BUILDING OR ADJACENT BUILDING UNLESS THE VENT TERMINAL IS AT LEAST 2 FEET ABOVE THE TOP OF SUCH OPENING.

P THE DRAWINGS AND SPECIFICATIONS ARE PRESENTED TO DEFINE THE SPECIFIC SYSTEM REQUIREMENTS AND SERVE TO EXPAND ON THE PRIMARY CONTRACT REQUIREMENT BY PROVIDING COMPLETE PLUMBING SYSTEMS. DRAWINGS ARE GENERALLY DIAGRAMMATIC AND ARE INTENDED TO ENCOMPASS SYSTEMS THAT WILL NOT INTERFERE WITH THE STRUCTURAL AND THE ARCHITECTURAL DESIGN OF THE BUILDING.

BID OPTIONS (RE: G-004 FOR COMPLETE LIST)

BASE BID:
1. DEMOLOTION OF EXISTING PLUMBING IN THE FORMAL AREA.
2. NEW CONDENSATE DRAIN SYSTEM FOR TELECOM ROOM (TR).

BID OPTIONS:
#1: DEMOLITION OF EXISTING PLUMBING IN THE OFFICE AND COLLABORATION AREA.
#7: DEMOLITION OF EXISTING PLUMBING IN THE INFORMAL WORK AREA.
#8: NEW CONSTRUCTION IN THE INFORMAL WORK AREA.
#10: DEMOLITION OF EXISTING WATER HEATER IN THE BOILER ROOM.

STATE OF TEXAS
BRANDEN M. SCHNEIDER
129852
LICENSED
PROFESSIONAL ENGINEER
6.24.2021

US Army Corps of Engineers ®

MARK	DESCRIPTION	DATE

DESIGNED BY: D. KEMP
DRAWN BY: D. KEMP
CHECKED BY: P. BAKER
SUBMITTED BY: E. CLINESS
FILENAME: ANSI D K408-923-P-001
ISSUE DATE: JUNE 2022
CONTRACT NO.: W912PP-22-R-0021

US ARMY CORPS OF ENGINEERS
ALBUQUERQUE
ALBUQUERQUE, NEW MEXICO

JACOBS
JACOBS ENGINEERING GROUP INC.
777 Main Street
Fort Worth, TX 76102

COMBAT RESCUE HELICOPTER SIMULATOR FACILITY
KIRTLAND AIR FORCE BASE (AFB)
BERNALILLO COUNTY, NEW MEXICO

PARTIAL RENOVATION BUILDING 923
GENERAL NOTES AND SYMBOLS

SHEET ID
923
P-001

READY TO ADVERTISE

GENERAL NOTES - DEMOLITION

A	BASE BID, BID OPTION #1, BID OPTION #7: REMOVE FLOOR DRAINAGE FIXTURES. CAP SANITARY PIPING BELOW FLOOR; REPAIR FLOOR. REMOVE UNUSED VENT PIPING TO JUST BELOW ROOF AND CAP PIPE ABOVE ROOF. REMOVE UNUSED DOMESTIC WATER VALVES AND PIPING.
B	BASE BID, BID OPTION #7: REMOVE INDIVIDUAL FIXTURE AND ASSOCIATED PIPING. REMOVE SANITARY PIPING TO BELOW FLOOR AND CAP; REPAIR FLOOR. REMOVE DOMESTIC WATER PIPING TO MAIN AND CAP AT MAIN. REMOVE UNUSED VENT PIPING TO JUST BELOW ROOF AND CAP PIPE ABOVE ROOF .
C	BID OPTION #1: REMOVE INDIVIDUAL FIXTURE AND ASSOCIATED PIPING. REMOVE SANITARY PIPING TO BELOW FLOOR AND CAP; REPAIR FLOOR. REMOVE DOMESTIC WATER PIPING TO MAIN AND CAP AT MAIN. REMOVE VENT PIPE TO ABOVE CEILING AND TEMPORARILY CAP FOR RECONNECTION TO VENT FROM NEW WB-1.
D	BID OPTION #7: REMOVE RESTROOM PLUMBING FIXTURES AND ASSOCIATED PIPING. SAWCUT FLOOR AS REQUIRED TO REMOVE SANITARY PIPING UNDERFLOOR TO POINT OF DISCONNECTION AND CAP (RE: A5/P-401). REMOVE DOMESTIC WATER AND VENT PIPING TO MAIN AND CAP AT MAIN. EXISTING VENT THROUGH ROOF TO REMAIN.
E	BID-OPTION #10: REMOVE EXISTING DOMESTIC WATER HEATER IN BOILER ROOM, WITH ASSOCIATED PUMPS AND PIPING, TO NEAREST ISOLATION VALVE. INDICATED PIPE SIZES ARE BASED ON AS-BUILT DRAWINGS (ASBESTOS ABATEMENT WAS COMPLETED CIRCA 1992).
F	REFER TO ARCHITECTURE FOR INSTRUCTIONS ON REPAIR OF FLOOR AND ROOF.
G	DRAWINGS ARE BASED ON THE BEST INFORMATION AVAILABLE, INCLUDING AS-BUILT DRAWINGS. CONTRACTOR TO FIELD VERIFY EXISTING CONDITIONS.

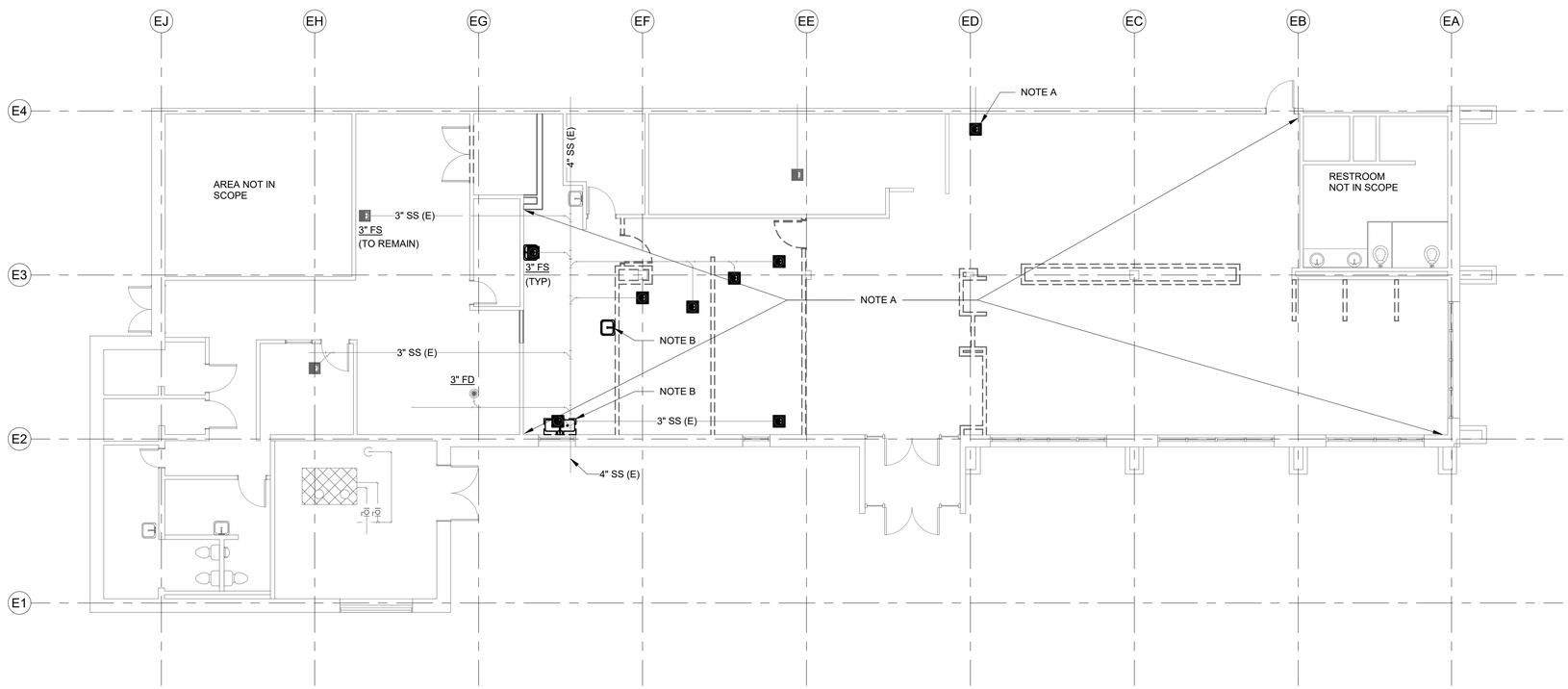

A1 OVERALL DEMOLITION PLAN - BASE BID
1/8" = 1'-0"

KEY PLAN

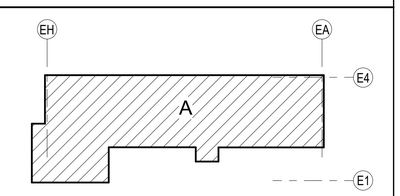

GRAPHIC SCALE

8 0 8 16
Scale: 1/8 INCH = 1 FOOT

PROJECT NORTH

PLAN NORTH

STATE OF TEXAS
BRANDEN M. SCHNEIDER
129852
LICENSED
PROFESSIONAL ENGINEER
6.24.2021

US Army Corps of Engineers ®

MARK	DESCRIPTION	DATE

DESIGNED BY: D. KEMP
DRAWN BY: D. KEMP
CHECKED BY: P. BAKER
SUBMITTED BY:
SIZE: ANSI D
FILENAME: K469-923-PD110
ISSUE DATE: JUNE 2022
CONTRACT NO.: W912PP-22-R-0021

US ARMY CORPS OF ENGINEERS
ALBUQUERQUE
ALBUQUERQUE, NEW MEXICO

JACOBS
JACOBS ENGINEERING GROUP INC.
777 Main Street
Fort Worth, TX 76102

COMBAT RESCUE HELICOPTER SIMULATOR FACILITY
KIRTLAND AIR FORCE BASE (AFB),
BERNALILLO COUNTY, NEW MEXICO
PARTIAL RENOVATION BUILDING 923
OVERALL DEMOLITION PLAN - BASE BID

SHEET ID
923
PD110

READY TO ADVERTISE

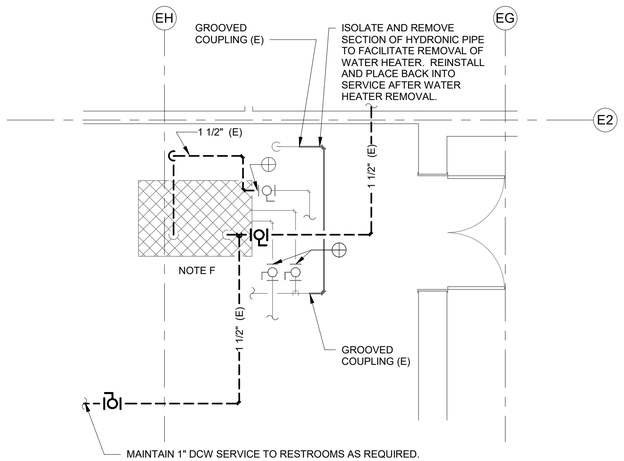

E1 WATER HEATER DEMOLITION - BID OPTION #10

1/4" = 1'-0"

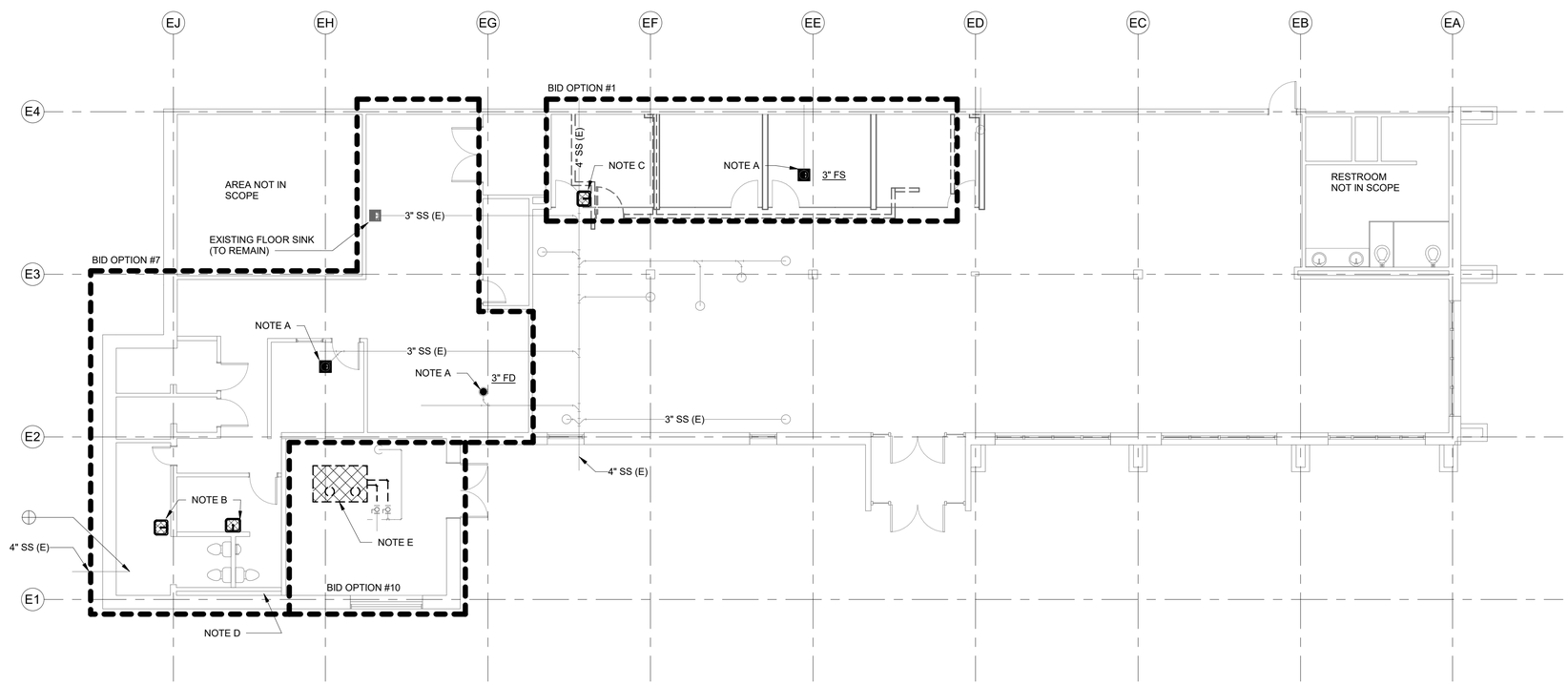

A1 OVERALL DEMOLITION PLAN - BID OPTIONS

1/8" = 1'-0"

GENERAL NOTES - DEMOLITION

A	BASE BID, BID OPTION #1, BID OPTION #7: REMOVE FLOOR DRAINAGE FIXTURES. CAP SANITARY PIPING BELOW FLOOR; REPAIR FLOOR. REMOVE UNUSED VENT PIPING TO JUST BELOW ROOF AND CAP PIPE ABOVE ROOF. REMOVE UNUSED DOMESTIC WATER VALVES AND PIPING.
B	BASE BID, BID OPTION #7: REMOVE INDIVIDUAL FIXTURE AND ASSOCIATED PIPING. REMOVE SANITARY PIPING TO BELOW FLOOR AND CAP; REPAIR FLOOR. REMOVE DOMESTIC WATER PIPING TO MAIN AND CAP AT MAIN. REMOVE UNUSED VENT PIPING TO JUST BELOW ROOF AND CAP PIPE ABOVE ROOF .
C	BID OPTION #1: REMOVE INDIVIDUAL FIXTURE AND ASSOCIATED PIPING. REMOVE SANITARY PIPING TO BELOW FLOOR AND CAP; REPAIR FLOOR. REMOVE DOMESTIC WATER PIPING TO MAIN AND CAP AT MAIN. REMOVE VENT PIPE TO ABOVE CEILING AND TEMPORARILY CAP FOR RECONNECTION TO VENT FROM NEW WB-1.
D	BID OPTION #7: REMOVE RESTROOM PLUMBING FIXTURES AND ASSOCIATED PIPING. SAWCUT FLOOR AS REQUIRED TO REMOVE SANITARY PIPING UNDERFLOOR TO POINT OF DISCONNECTION AND CAP (RE: A5/P-401). REMOVE DOMESTIC WATER AND VENT PIPING TO MAIN AND CAP AT MAIN. EXISTING VENT THROUGH ROOF TO REMAIN.
E	BID-OPTION #10: REMOVE EXISTING DOMESTIC WATER HEATER IN BOILER ROOM, WITH ASSOCIATED PUMPS AND PIPING, TO NEAREST ISOLATION VALVE. INDICATED PIPE SIZES ARE BASED ON AS-BUILT DRAWINGS (ASBESTOS ABATEMENT WAS COMPLETED CIRCA 1992).
F	REFER TO ARCHITECTURE FOR INSTRUCTIONS ON REPAIR OF FLOOR AND ROOF.
G	DRAWINGS ARE BASED ON THE BEST INFORMATION AVAILABLE, INCLUDING AS-BUILT DRAWINGS. CONTRACTOR TO FIELD VERIFY EXISTING CONDITIONS.

US Army Corps of Engineers ®

MARK	DESCRIPTION	DATE

DESIGNED BY: D. KEMP
DRAWN BY: D. KEMP
CHECKED BY: P. BAKER
SUBMITTED BY: E. OLNESS
SIZE: ANSI D
FILENAME: K489-923-PD111
ISSUE DATE: JUNE 2022
CONTRACT NO.: W912PP-22-R-0021

US ARMY CORPS OF ENGINEERS
ALBUQUERQUE
ALBUQUERQUE, NEW MEXICO

JACOBS
JACOBS ENGINEERING GROUP INC.
777 Main Street
Fort Worth, TX 76102

KEY PLAN

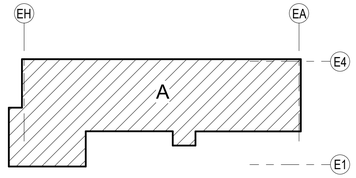

GRAPHIC SCALE

8 0 8 16

Scale: 1/8 INCH = 1 FOOT

PROJECT NORTH

PLAN NORTH

STATE OF TEXAS
BRANDEN M. SCHNEIDER
129852
LICENSED
PROFESSIONAL ENGINEER
6.24.2021

COMBAT RESCUE HELICOPTER SIMULATOR FACILITY
KIRTLAND AIR FORCE BASE (AFB),
BERNALILLO COUNTY, NEW MEXICO

PARTIAL RENOVATION BUILDING 923

OVERALL DEMOLITION PLAN - BID OPTIONS

SHEET ID
923
PD111

READY TO ADVERTISE

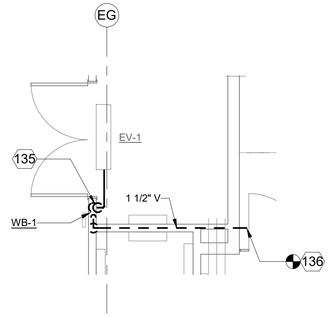

F1 TR CONDENSATE PLAN
1/4" = 1'-0"

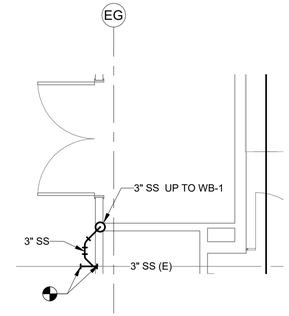

F4 TR UNDERFLOOR PLAN
1/4" = 1'-0"

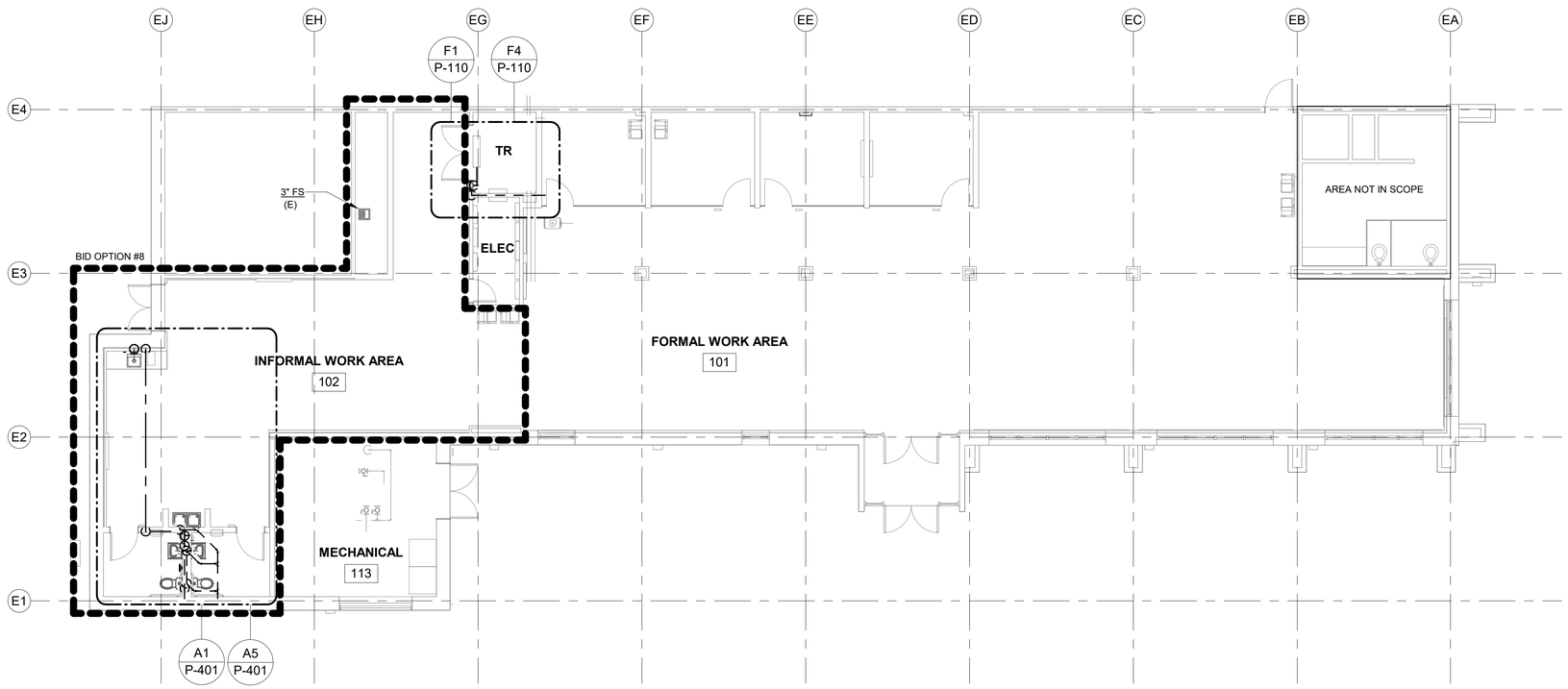

A1 FLOOR PLAN - LEVEL 1
1/8" = 1'-0"

GENERAL NOTES - OVERALL PLAN

A	REFER TO SHEET P-401 FOR ENLARGED PLANS, INCLUDING UNDERFLOOR.
B	REFER TO SHEET P-601 FOR PLUMBING SCHEDULES.
C	REFER TO ARCHITECTURE FOR PENETRATION DETAILS THROUGH THE BUILDING ENVELOPE.
D	REFER TO SHEETS PD110 AND PD111 FOR DEMOLITION PLANS.

KEYNOTES

135	3/4" CD DOWN IN WALL TO WALL DRAIN BOX WB-1. RE: B7/P-601
136	CONNECT TO EXISTING 1-1/2" OR LARGER VENT IN CEILING SPACE.

KEY PLAN

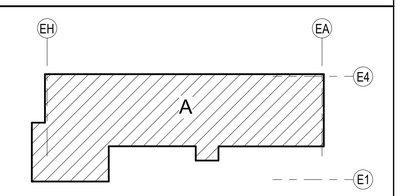

GRAPHIC SCALE

8 0 8 16
Scale: 1/8 INCH = 1 FOOT

PROJECT NORTH

PLAN NORTH

STATE OF TEXAS
BRANDEN M. SCHNEIDER
129852
LICENSED
PROFESSIONAL ENGINEER
6.24.2021

US Army Corps of Engineers ®

MARK	DESCRIPTION	DATE

DESIGNED BY: D. KEMP
DRAWN BY: D. KEMP
CHECKED BY: P. BAKER
SUBMITTED BY: E. OLMESS
SIZE: ANSI D
ISSUE DATE: JUNE 2022
CONTRACT NO.: W912PP-22-R-0021
FILENAME: K486923-P-110

US ARMY CORPS OF ENGINEERS
ALBUQUERQUE
ALBUQUERQUE, NEW MEXICO

JACOBS
JACOBS ENGINEERING GROUP INC.
777 Main Street
Fort Worth, TX 76102

COMBAT RESCUE HELICOPTER SIMULATOR FACILITY
KIRTLAND AIR FORCE BASE (AFB)
BERNALILLO COUNTY, NEW MEXICO

PARTIAL RENOVATION BUILDING 923
FLOOR PLAN - LEVEL 1

SHEET ID
923
P-110

READY TO ADVERTISE

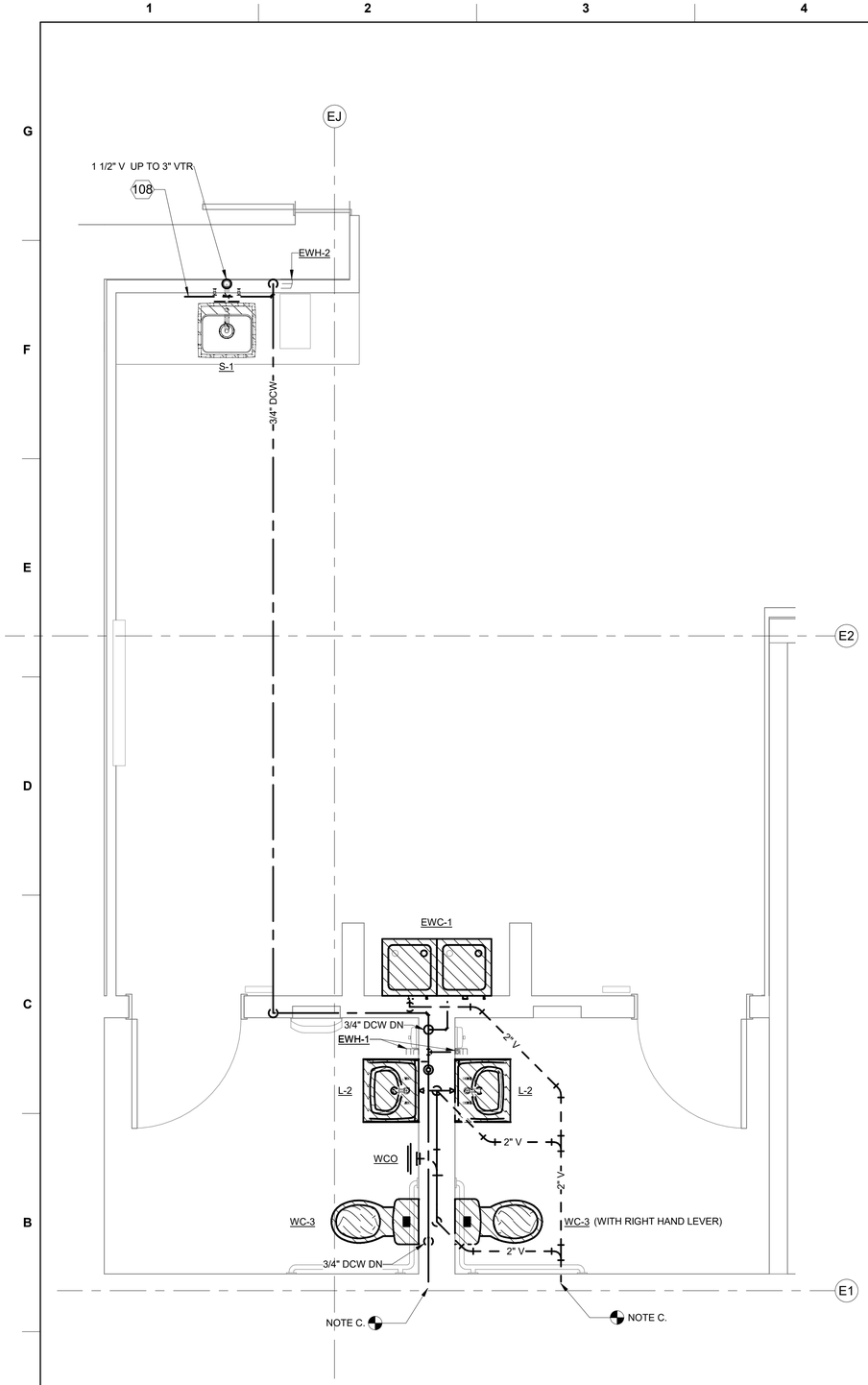

A1 FLOOR PLAN - BID OPTION #8

1/2" = 1'-0"

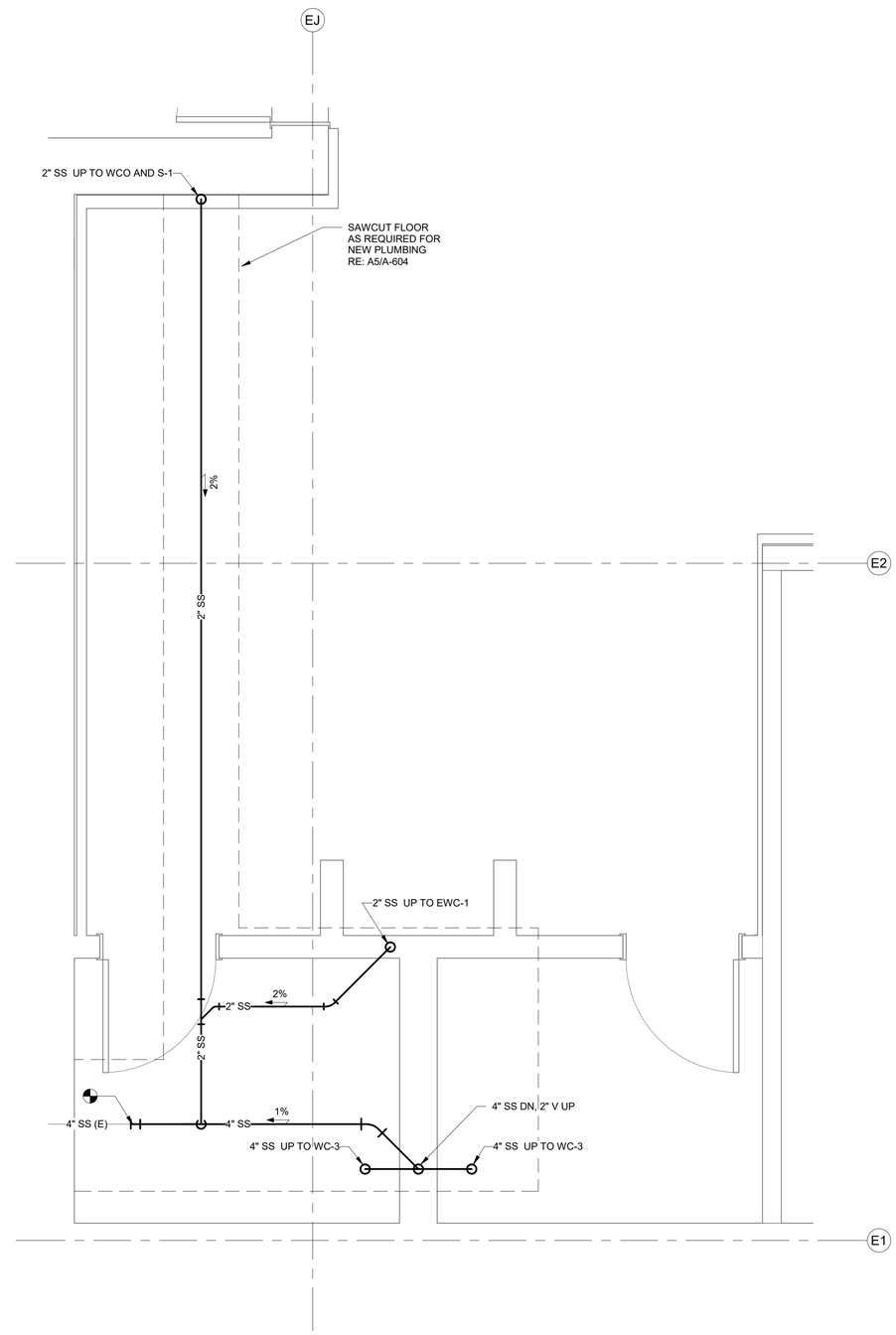

A5 UNDERFLOOR PLAN - BID OPTION #8

1/2" = 1'-0"

GENERAL NOTES - PARTIAL PLANS

A	REFER TO SHEET P-601 FOR PLUMBING SCHEDULES. REFER TO SHEETS PD-110 AND PD-111 FOR DEMOLITION PLANS.
B	SLOPE ALL SANITARY PIPING AT 1/4" PER FOOT FOR PIPE SIZES SMALLER THAN 3". SLOPE LARGER PIPING AT 1/8" PER FOOT.
C	FIELD VERIFY LOCATION OF EXISTING VENT AND DCW PIPING. PROVIDE ACCESSBILE QUARTER TURN ISOLATION VALVE FOR DOMESTIC WATER SUPPLY TO RESTROOM.

KEYNOTES

108	CONNECT COFFEE BREWER UNDER COUNTER TO DEDICATED COLD WATER SUPPLY. PROVIDE WITH QUARTER TURN STOP VALVE, ASSE-1022 BACKFLOW PREVENTER AND USER REPLACEABLE FILTER BELOW COUNTER. CONCEAL COUNTER PENETRATION BEHIND COFFEE BREWER. RE: B7/P-701

KEY PLAN

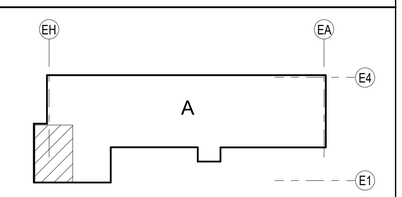

GRAPHIC SCALE

2 1 0 2 4

Scale: 1/2 INCH = 1 FOOT

PROJECT NORTH

PLAN NORTH

STATE OF TEXAS
BRANDEN M. SCHNEIDER
129852
LICENSED
PROFESSIONAL ENGINEER
6.24.2021

US Army Corps of Engineers ®

MARK	DESCRIPTION	DATE

DESIGNED BY: D. KEMP
DRAWN BY: D. KEMP
CHECKED BY: P. BAKER
SUBMITTED BY: E. OLMESS
SIZE: ANSI D
FILENAME: K486923-P-401
ISSUE DATE: JUNE 2022
CONTRACT NO.: W912PP-22-R-0021

US ARMY CORPS OF ENGINEERS
ALBUQUERQUE
ALBUQUERQUE, NEW MEXICO

JACOBS
JACOBS ENGINEERING GROUP INC.
777 Main Street
Fort Worth, TX 76102

COMBAT RESCUE HELICOPTER SIMULATOR FACILITY
KIRTLAND AIR FORCE BASE (AFB),
BERNALILLO COUNTY, NEW MEXICO

PARTIAL RENOVATION BUILDING 923
ENLARGED PLANS - BID OPTION #8

SHEET ID
923
P-401

READY TO ADVERTISE

TANKLESS WATER HEATER SCHEDULE (BID OPTION #8)

MARK	SERVICE	KW	ACTIVATION (GPM)	DESIGN FLOW (GPM)	DESIGN TEMPERATURE RISE (°F)	MAXIMUM LEAVING TEMPERATURE (°F)	VOLTAGE/ PHASE	DESCRIPTION
EWH-1	LAVATORY	3.6	0.3	0.5	49	105	208/1	POINT OF USE WITH INTEGRAL ASSE 1070 THERMOSTATIC MIXING VALVE, FACTORY SET. DESIGN BASIS: EEMAX ACCUMIX II
EWH-2	SINK	8.3	0.2	1.5	38	115	208/1	POINT OF USE. DESIGN BASIS: EEMAX LAVADVANTAGE

PLUMBING FIXTURE SCHEDULE (BASE BID, BID OPTION #8)

MARK	FIXTURE	DCW	DHW	WASTE	VENT	DESCRIPTION	ELECTRICAL
EWC-1	WATER COOLER	1/2"	-	2"	2"	BID OPTION #8 FIXTURE: ELECTRIC, REFRIGERATED, WALL-HUNG, BI-LEVEL, 8 GPH, WATER COOLER WITH BOTTLE FILLER, STAINLESS STEEL BODY, & INTEGRAL WATER FILTER. ACCESSORIES: ASME WALL CARRIER. DESIGN BASIS: ELKAY LZSTL8WSSP	115/1V, 5FLA
L-2	LAVATORY	-	1/2"	2"	2"	BID OPTION #8 BOWL: WHITE, VITREOUS CHINA, WALL-HUNG, D-SHAPED, 22" X 18" OVERALL, 18" X 12" X 4" DEEP OVAL BOWL WITH FRONT OVERFLOW, & DRAIN SHROUD FAUCET: CHROME-PLATED, SOLID BRONZE. HIGH ARCH SINGLE INLET GOOSNECK ELECTRONIC SENSOR, HARDWIRED FAUCET WITH 4-1/2" REACH X 6" HIGH RIGID GOOSENECK, 0.5 GPM AERATOR STRAINER: CHROME-PLATED BRONZE OR STAINLESS STEEL PERFORATED OUTLET STRAINER WITH OFFSET TAILPIECE. ACCESSORIES: ASME WALL CARRIER. TRANSFORMER: PROVIDE SINGLE TRANSFORMER FOR UP TO 2 LAVATORY FAUCETS. DESIGN BASIS: KOHLER K-2035 WITH CHICAGO FAUCETS EQ-C211A-31ABCP	24V
S-1	SINGLE SINK	1/2"	1/2"	2"	2"	BID OPTION #8 BOWL: 20 GA. STAINLESS STEEL, UNDERMOUNT, SINGLE BOWL, 18-1/2" X 18-1/2" OVERALL, 16" X 16" X 5-3/8" DEEP COMPARTMENT, CENTER REAR 3-1/2" OUTLET, ADA COMPLIANT. FAUCET: 8" CENTER SET, HIGH ARCH, QUARTER TURN WRIST BLADE HANDLES WITH RED AND BLUE INDICATORS ON HANDLE, 1.5 GPM. DESIGN BASIS: ELKAY ELUHAD161655PD WITH SYMMONS S-254-LWG-1.5	
WB-1	WALL DRAIN BOX	-	-	3"	1-1/2"	BASE BID DRAIN ONLY. DESIGN BASIS: SIOUX CHIEF 696 SERIES OX BOX.	
WC-3	WATER CLOSET	1/2"	-	4"	2"	BID OPTION #8 BOWL: FLOOR MOUNTED, FLOOR OUTLET WITH 12" ROUGH-IN, VITREOUS CHINA, ADA HEIGHT, ELONGATED, TANK TYPE, 1.28 GPF WITH 3" CANISTER GRAVITY FLUSH VALVE AND LOCKING TANK COVER. SEAT: PLASTIC, ELONGATED, OPEN FRONT, WITHOUT COVER. PROVIDE NON-CORROSIVE HARDWARE AND PLASTIC WING NUTS. DESIGN BASIS: KOHLER K-76301	

NOTES:
1. PROVIDE WB-1 UNDER BASE BID. ALL OTHERS ARE BID OPTION #8.
2. BID OPTION #8: PROVIDE TWO (2) EA. WC-3, ONE WITH RIGHT HAND FLUSH LEVER.

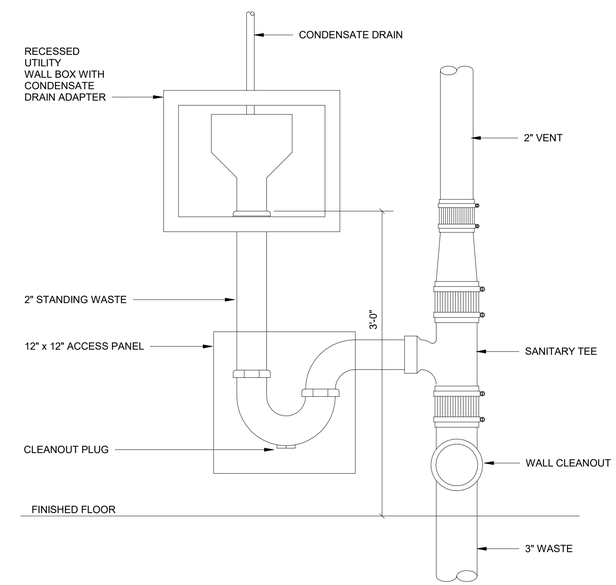

B7 WALL BOX DETAIL
NTS

STATE OF TEXAS
BRANDEN M. SCHNEIDER
129852
LICENSED
PROFESSIONAL ENGINEER
6.24.2021

US Army Corps of Engineers ®

MARK	DESCRIPTION	DATE

ISSUE DATE: JUNE 2022
CONTRACT NO.: W912PP-22-R-0021

DESIGNED BY: D. KEMP
DRAWN BY: D. KEMP
CHECKED BY: P. BAKER
SUBMITTED BY: E. OLNESS
SIZE: ANSI D
FILENAME: K469-923-P-601

US ARMY CORPS OF ENGINEERS
ALBUQUERQUE
ALBUQUERQUE, NEW MEXICO

JACOBS
JACOBS ENGINEERING GROUP INC.
777 Main Street
Fort Worth, TX 76102

COMBAT RESCUE HELICOPTER SIMULATOR FACILITY
KIRTLAND AIR FORCE BASE (AFB),
BERNALILLO COUNTY, NEW MEXICO

PARTIAL RENOVATION BUILDING 923
PLUMBING SCHEDULES

SHEET ID
923
P-601

READY TO ADVERTISE

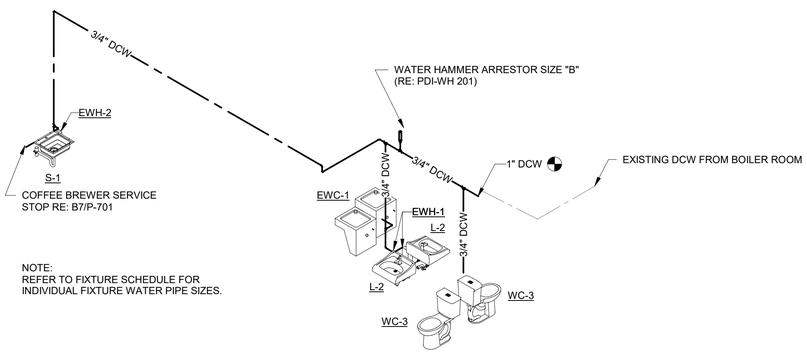

NOTE:
REFER TO FIXTURE SCHEDULE FOR
INDIVIDUAL FIXTURE WATER PIPE SIZES.

E1 DOMESTIC WATER RISER - BID OPTION #8

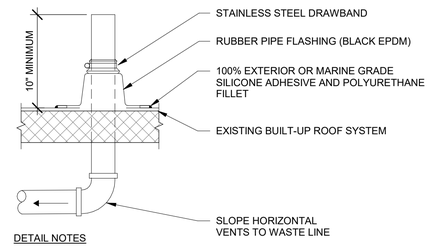

DETAIL NOTES

1. TERMINATE VENTS THRU ROOF MINIMUM 10'-0" FROM ANY OUTSIDE AIR INTAKES (TYP.). VERIFY ALL INTAKES PRIOR TO MAKING ROOF PENETRATIONS
2. COORDINATE EXACT ROOF SLOPE AND FLASHING DETAILS WITH ARCHITECT AND ROOFING CONTRACTOR

E5 VENT THROUGH ROOF DETAIL

NTS

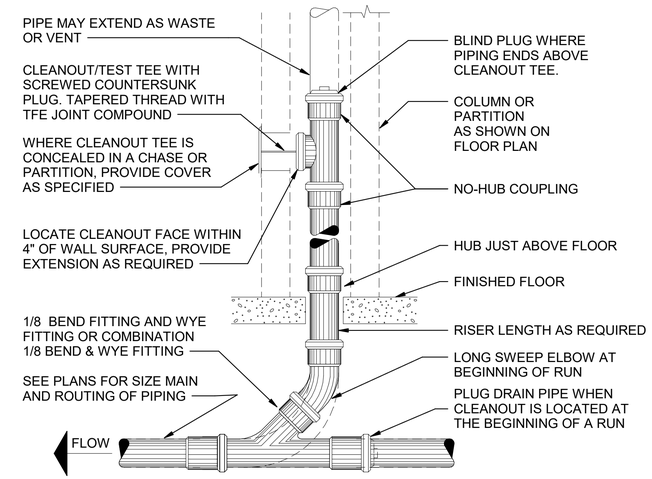

NOTES:
PROVIDE WCO ON SANITARY WASTE BRANCHES NOT SERVED WITH FLOOR CLEANOUT. MAXIMUM HEIGHT ABOVE FINISHED FLOOR 4'-0".

E7 WALL CLEANOUT

NTS

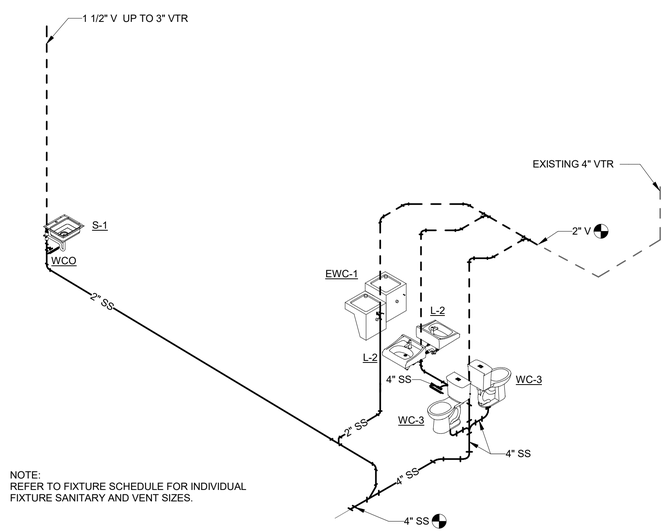

NOTE:
REFER TO FIXTURE SCHEDULE FOR INDIVIDUAL
FIXTURE SANITARY AND VENT SIZES.

A1 SANITARY RISER - BID OPTION #8

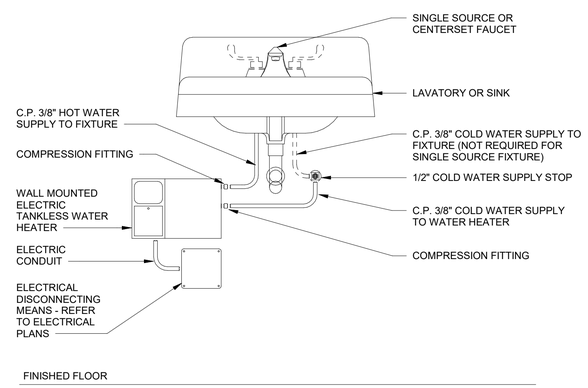

B4 LAVATORY PIPING - BID OPTION #8

NTS

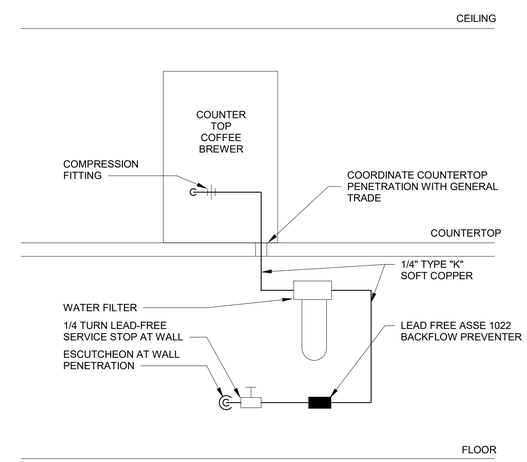

B7 COUNTER-TOP COFFEE MAKER - BID OPTION #8

NTS

STATE OF TEXAS
BRANDEN M. SCHNEIDER
129852
LICENSED
PROFESSIONAL ENGINEER
6.24.2021

US Army Corps of Engineers ®

MARK	DESCRIPTION	DATE

ISSUE DATE: JUNE 2022
CONTRACT NO.: W912PP-22-R-0021

DESIGNED BY: D. KEMP
DRAWN BY: D. KEMP
CHECKED BY: P. BAKER
SUBMITTED BY: E. OLNESS
SIZE: ANSI D
FILENAME: KA69-923-P-701

US ARMY CORPS OF ENGINEERS
ALBUQUERQUE
ALBUQUERQUE, NEW MEXICO

JACOBS®
JACOBS ENGINEERING GROUP INC.
777 Main Street
Fort Worth, TX 76102

COMBAT RESCUE HELICOPTER SIMULATOR FACILITY
KIRTLAND AIR FORCE BASE (AFB),
BERNALILLO COUNTY, NEW MEXICO

PARTIAL RENOVATION BUILDING 923
PLUMBING DIAGRAMS AND DETAILS

SHEET ID
923
P-701

READY TO ADVERTISE

DRAWING ABBREVIATIONS

A	----------
ACC	AIR COOLED CHILLER
AD	AIR DEVICE
AFF	ABOVE FINISHED FLOOR
AFG	ABOVE FINISHED GRADE
AHU	AIR HANDLING UNIT
AL	ACOUSTICAL LINING
AS	AIR SEPARATOR
B	----------
BOD	BOTTOM OF DUCT
BOP	BOTTOM OF PIPE
C	----------
C	CONDENSATE
CFM	CUBIC FEET PER MINUTE
CH	CHILLER
CHR	CHILLED WATER RETURN
CHS	CHILLED WATER SUPPLY
CR	CONDENSATE RETURN (STEAM)
CU	CONDENSING UNIT
CWR	CONDENSER WATER RETURN
CWS	CONDENSER WATER SUPPLY
D	----------
DB	DRY BULB
DOAU	DEDICATED OUTDOOR AIR UNIT
DX	DIRECT EXPANSION
E	----------
EA	EXHAUST AIR
ECU	EVAPORATIVE COOLING UNIT
EF	EXHAUST FAN
ERP	ENERGY RECOVER PUMP
ERR	ENERGY RECOVERY WATER RETURN
ERS	ENERGY RECOVERY WATER SUPPLY
ERU	ENERGY RECOVERY UNIT
ET	EXPANSION TANK
F	----------
FC	FLEXIBLE CONNECTION
FCU	FAN COIL UNIT
FD	FIRE DAMPER
FO	FAIL OPEN
FPM	FEET PER MINUTE
G	----------
GR	GLYCOL RETURN
GS	GLYCOL SUPPLY
H	----------
HC	HEATING COIL
HP	HEAT PUMP
HPS	HIGH PRESSURE STEAM
HVU	HEAT AND VENT UNIT
HWR	HOT WATER RETURN
HWS	HOT WATER SUPPLY
I	----------
IHP	INVERTER HEAT PUMP
L	----------
LPS	LOW PRESSURE STEAM
LVR	LOUVER
M	----------
MAU	MAKE-UP AIR UNIT
MD	MOTORIZED DAMPER
MPS	MEDIUM PRESSURE STEAM
N	----------
NTS	NOT TO SCALE
O	----------
OA	OUTDOOR AIR
P	----------
PROVIDE	FURNISH AND INSTALL
PICV	PRESSURE INDEPENDENT CONTROL VALVE
R	----------
RA	RETURN AIR
RH	RADIANT HEATER
RM	RADIANT MANIFOLD
S	----------
S	STEAM (AND CONDENSATE)
SA	SUPPLY AIR
SAD	SUPPLY ATTENUATOR DEVICE
SM	SNOW MELT MANIFOLD
V	----------
VAV	VARIABLE AIR VOLUME
VD	VOLUME DAMPER
VP	VACUUM PUMP FOR RADIANT HEATER
W	----------
WB	WET BULB
Z	----------
ZSB	ZONE SELECTOR BOX

PIPING LABELS

CHS	CHILLED WATER SUPPLY
CHR	CHILLED WATER RETURN
CWS	CONDENSER WATER SUPPLY
CWR	CONDENSER WATER RETURN
HWS	HEATING WATER SUPPLY
HWR	HEATING WATER RETURN
CD	CONDENSATE DRAIN
D	DRAIN
GS	GLYCOL SUPPLY
GR	GLYCOL RETURN
MU	MAKE-UP WATER
RL	REFRIGERANT LIQUID
RS	REFRIGERANT SUCTION
RFR	RADIANT FLOOR HEATING WATER RETURN
RFS	RADIANT FLOOR HEATING WATER SUPPLY
SMR	SNOW MELT HEATING WATER RETURN
SMS	SNOW MELT HEATING WATER SUPPLY
XX AAA XX	PIPE TO BE REMOVED, "AAA" DENOTES TYPE
AAA	EXISTING PIPE, "AAA" DENOTES TYPE
AAA	UNDERGROUND PIPE, "AAA" DENOTES TYPE

LEGEND

DUCTWORK SYMBOLS

- XX/XX — MECHANICAL DUCT
- MANUAL VOLUME DAMPER (SEE BELOW FOR OTHER TYPES)
- DAMPER TYPE:
  - FD - FIRE DAMPER
  - SD - SMOKE DAMPER
  - FSD - COMBINATION FIRE/SMOKE DAMPER
  - BD - GRAVITY BACKDRAFT DAMPER
  - CD - CONTROL DAMPER
  - *NO MARK INDICATES MANUAL VOLUME DAMPER
- VERTICAL DAMPER IN DUCT (OR OPENING) AT FIRE-RATED PARTITION
- HORIZONTAL FIRE DAMPER AT FLOOR PENETRATION
- CONNECT NEW DUCT TO EXISTING
- DISCONNECT DUCT FROM EXISTING
- VANED ELBOW (PROVIDE VANES IN ALL SQUARE OR RECTANGULAR ELBOWS, UNLESS NOTED OTHERWISE)
- FAN POWERED TERMINAL UNIT
- TYPICAL SUPPLY AIR TEE WITH SPLITTER DAMPER
- STANDARD ROUND BRANCH DUCT (SPIN-IN)
- STANDARD ROUND BRANCH DUCT (CONICAL)
- STANDARD RECTANGULAR BRANCH DUCT (45° TAKE-OFF)
- STANDARD CONCENTRIC DUCT TRANSITION
- STANDARD ECCENTRIC DUCT TRANSITION
- RECTANGULAR-TO-ROUND DUCT TRANSITION
- SECTION THROUGH ROUND DUCT, SUPPLY OR EXHAUST AS NOTED
- SECTION THROUGH RECTANGULAR SUPPLY DUCT
- SECTION THROUGH RECTANGULAR RETURN DUCT
- SECTION THROUGH RECTAN-GULAR EXHAUST DUCT
- A.D. — ACCESS DOOR IN CEILING
- A.D. — DUCT ACCESS DOOR
- CEILING SUPPLY AIR DIFFUSER, ARROWS INDICATE PATTERN. NO PATTERN SHOWN EQUALS 4-WAY
- CEILING RETURN AIR GRILLE OR RETURN REGISTER
- CEILING EXHAUST AIR GRILLE OR EXHAUST REGISTER
- SIDEWALL SUPPLY OR RETURN REGISTER OR GRILLE
- SUPPLY OR OUTSIDE AIR DUCT UP
- SUPPLY OR OUTSIDE AIR DUCT DOWN
- RETURN AIR DUCT UP
- RETURN AIR DUCT DOWN
- RELIEF OR EXHAUST AIR DUCT UP
- RELIEF OR EXHAUST AIR DUCT DOWN
- IN-LINE 90 DEGREE DROP (RISE) IN DUCT
- UP — INCLINE RISE IN DUCT
- DOWN — INCLINE DROP IN DUCT
- FLEXIBLE DUCT, SIZE AS SHOWN

PIPING SYMBOLS

- PITCH DOWN IN DIRECTION OF ARROW
- DIRECTION OF FLOW
- PIPE ANCHOR
- PIPE GUIDE
- CONCENTRIC REDUCER
- ECCENTRIC REDUCER
- STRAINER WITH BLOWDOWN VALVE
- BRANCH - SIDE CONNECTION
- BRANCH - TOP CONNECTION
- BRANCH - BOTTOM CONNECTION
- RISE OR DROP IN PIPE
- RISER DOWN (ELBOW)
- RISER UP (ELBOW)
- CAPPED PIPE
- BLIND FLANGE
- UNION (SCREWED)
- PUMP
- FLANGED CONNECTION
- TEMPERATURE & PRESSURE PORT
- FLEX PIPE
- FLEX CONNECTION
- BELLOWS CONNECTION (DOUBLE SPHERE NEOPRENE TYPE)
- THERMOMETER
- PRESSURE GAGE WITH COCK
- PS — PRESSURE SWITCH
- FS — FLOW SWITCH
- MANUAL AIR VENT
- AUTOMATIC AIR VENT

EQUIPMENT SYMBOLS

- NEW EQUIPMENT
- EQUIPMENT CLEARANCE

MISCELLANEOUS

- 001 — KEYNOTE
- POINT OF CONNECTION - NEW TO EXISTING
- FTR - A - B
  - A = SCHEDULE TYPE
  - B = FEET OF ACTIVE LENGTH

DEMOLITION

- DEMOLISHED EQUIPMENT
- EXTENT OF DEMOLITION AREA

CONTROLS SYMBOLS

- T — ROOM THERMOSTAT
- H — ROOM HUMIDISTAT
- T — TEMPERATURE SENSOR/TRANSMITTER
- H — HUMIDITY SENSOR/TRANSMITTER
- S — DUCT SMOKE DETECTOR
- R — RELAY
- ST — SLAB SENSOR
- VIBRATION SWITCH
- HT — DUCT HUMIDITY SENSOR/TRANSMITTER
- PT — PRESSURE TRANSMITTER
- MOTOR STARTER (LOCAL OR MCC)
- SP — STATIC PRESSURE SENSOR/TRANSMITTER
- DT — DIFFERENTIAL PRESSURE SENSOR/TRANSMITTER
- DP — DIFFERENTIAL PRESSURE SWITCH (DIGITAL)
- T — DUCT AVERAGING TEMPERATURE ELEMENT
- F — FLOW SENSOR
- FR — FREEZESTAT
- FS — FLOW SWITCH
- M — ELECTRIC MOTOR
- RS — REFRIGERANT SENSOR
- LIQUID FLOW METER
- RECEIVER PRESSURE GAUGE (PANEL MTD.)
- CT — CURRENT SENSING RELAY
- DA — ELECTRIC DAMPER ACTUATOR
- CD — CARBON DIOXIDE (C02) SENSOR
- CM — CARBON MONOXIDE (C0) SENSOR
- F — FIRESTAT
- HS — MANUALLY ACTIVATED SWITCH (PULL STAT., PUSH STAT., ETC)
- AQ — AQUASTAT

CONTROL VALVE SYMBOLS:

- M — ELECTRIC ACTUATOR
- S — SOLENOID ACTUATOR

CONTROL DEFINITIONS:

NORMAL POSITION: INDICATES DEVICE POSITION WHEN THE SYSTEM IS DISABLED OR NOT ENERGIZED

FAIL POSITION: INDICATES DEVICE POSITION WHEN THE CONTROL SIGNAL IS LOST OR UPON A LOSS OF POWER.

NO - NORMALLY OPEN
NC - NORMALLY CLOSED
FO - FAIL OPEN
FC - FAIL CLOSED

NORMAL OPEN	NORMAL CLOSED	
		GATE VALVE
		VALVE W/ REDUCERS (GATE VALVE SHOWN)
		GLOBE VALVE
		BUTTERFLY VALVE
		NEEDLE VALVE/ INSTRUMENT VALVE
		3-WAY VALVE
		BALL VALVE
		PLUG VALVE
		ANGLE VALVE

EQUIPMENT TAG SYMBOLS

AIR DEVICE TAG

AD - X | 380 — TAG; MAXIMUM AIRFLOW (CFM)

24/12	INDICATES A 24"x12" RECTANGULAR DUCT (NET FREE AREA)
20"ø	INDICATES A 20" ROUND DUCT (NET FREE AREA)

VALVE SYMBOLS

- GATE VALVE
- GLOBE VALVE
- CHECK VALVE (NON SLAM)
- PLUG VALVE
- PRESSURE REDUCING VALVE (PRV)
- BUTTERFLY VALVE
- BALL VALVE
- NEEDLE VALVE
- VENTURI FLOW METER
- VALVE IN DROP
- VALVE IN CENTER DROP
- VALVE IN RISE
- S — SOLENOID VALVE
- GATE VALVE W/ 3/4" HOSE THREAD ADAPTER
- TWO-WAY CONTROL VALVE
- THREE-WAY CONTROL VALVE
- SAFETY VALVE OR PRESSURE RELIEF VALVE
- MANUAL BALANCING VALVE
- AUTOMATIC BALANCING VALVE
- TEMPERATURE WELL
- FLANGED VALVE (GATE VALVE SHOWN)
- P — PRESSURE INDEP. CONTROL VALVE (PICV)

HVAC DESIGN CRITERIA

DESIGN CONDITIONS

WEATHER STATION - ALBUQUERQUE, NM
STATION #: WMO 723650
ELEVATION: 5404 FEET; LATITUDE: 35.04°N; LONGITUDE: 106.62°W
ASHRAE CLIMATE ZONE 7

WINTER: 21.9°F (IN ACCORDANCE WITH SW DIVISION AEIM)

SUMMER: SUMMER: 93.3°F DB / 59.7°F WB (IN ACCORDANCE WITH SW DIVISION AEIM); SUMMER EVAPORATION: 65.3°F WB / 80.6°F DB (1.0% OCCURENCE)

INDOOR DESIGN CONDITIONS

WINTER: 68°F ± 2°F (OFFICE/ADMIN AREAS)
68°F ± 2°F (COMMUNICATION ROOMS)
55°F ± 2°F (UNOCCUPIED SPACES)

SUMMER: 78°F ± 2°F & 55°F DP (OFFICE/ADMIN AREAS)
72°F ± 2°F (COMMUNICATION ROOMS)
85°F ± 2°F (UNOCCUPIED SPACES)

ENERGY CODE COMPLIANCE
THE MECHANICAL AND PLUMBING EQUIPMENT IN THESE DRAWINGS ARE IN COMPLIANCE WITH ASHRAE 189.1-2014 AND UFC 1-200-02. THE HVAC LOADS WERE PERFORMED IN ACCORDANCE WITH ASHRAE FUNDAMENTALS. ENERGY CALCULATIONS WERE PERFORMED IN ACCORDANCE WITH ASHRAE 90.1-2013.

GENERAL NOTES

A. REFER TO SPECIFICATIONS FOR MATERIALS AND METHODS FOR CONSTRUCTION.
B. COORDINATE LOCATION OF ALL PENETRATIONS WITH THE BUILDING STRUCTURE.
C. COORDINATE ALL SLAB PENETRATIONS AND SLEEVES PRIOR TO EACH CONCRETE POUR.
D. PERFORM WORK IN ACCORDANCE WITH THE LATEST EDITIONS, REVISIONS, AMENDMENTS OR SUPPLEMENTS OF APPLICABLE STATUTES, ORDINANCES, CODES, OR REGULATIONS OF FEDERAL, STATE AND LOCAL AUTHORITIES HAVING JURISDICTION IN EFFECT ON THE DATE BIDS ARE RECEIVED.
E. WHERE APPROVAL CODES HAVE BEEN ESTABLISHED BY OSHA, UNDERWRITERS LABORATORY, AMERICAN CODES, ANSI, ASME, ABAAG, ASHRAE, ASTM, ARI, NEC, NFPA SMACNA, OR THE STATE FIRE INSURANCE REGULATORY BODY, FOLLOW THESE STANDARDS WHETHER OR NOT INDICATED ON THE DRAWINGS.
F. COORDINATE WORK WITH ARCHITECTURAL FEATURES AND COORDINATE WORK SUCH THAT INTERFERENCES BETWEEN PIPING, DUCTWORK, EQUIPMENT, PLUMBING WORK, ELECTRICAL WORK, AND BUILDING STRUCTURE WILL BE AVOIDED.
G. PROVIDE THE ENTIRE SYSTEM AND ITS COMPONENT ITEMS OF EQUIPMENT IN OPERATING CONDITION WITHOUT OBJECTIONABLE VIBRATION OR NOISE IN ACCORDANCE WITH UFC-3-450-01 AND ASHRAE APPLICATIONS HANDBOOK .
H. PROVIDE ALL WIRING AND ELECTRICAL CONTROLS IN ACCORDANCE WITH NFPA 70 (NEC).
J. DO NOT SCALE THESE DRAWINGS FOR CONSTRUCTION PURPOSES.
K. ALL DUCTWORK SIZES ARE FREE AIR DIMENSIONS.
L. PAINT ANY ABOVE CEILING ITEMS, WHICH CAN BE SEEN THROUGH AIR SLOTS OR GRILLES, FLAT BLACK.
M. PROVIDE PLENUM RATED CABLE, DEVICES, PIPING, ETC. IN PLENUM SPACE.
N. PROVIDE TEMPORARY 30% EFFICIENT, 2" THICK FILTERS OVER RETURN AIR OPENINGS OF ANY AHU'S WHICH ARE PLACED IN SERVICE PRIOR TO COMPLETION OF CONSTRUCTION. REMOVE FILTERS FOR TEST & BALANCE.
P. DUCT AND PIPE HANGERS IN UNCONDITIONED SPACE OR EXTERIOR TO BUILDING SHALL BE GALVANIZED STEEL.
Q. PROVIDE ACCESS PANELS FOR ALL DAMPER ACTUATORS AND MOTORS LOCATED INSIDE DUCT OR FAN HOUSING.

DESIGN NARRATIVE

BUILDING 923 RENOVATION:

EXISTING DUCTWORK TO BE DEMOLISHED AND NEW DUCTWORK TO BE ROUTED FOR AIR DISTRIBUTION. TWO OF THE EXISTING AIR HANDLING UNITS TO BE USED TO CONDITION THE SPACE. LOW WALL RADIANT HEATER WILL BE DEMOLISHED AND REPLACED WITH NEW BASEBOARD RADIANT HEATERS TO HANDLE PERIMETER LOADS. DX MINI SPLIT TO BE PROVIDED TO CONDITION TELECOM ROOM.

STATE OF TEXAS
BRANDEN M. SCHNEIDER
129852
LICENSED PROFESSIONAL ENGINEER
6.24.2021

US Army Corps of Engineers ®

MARK	DESCRIPTION	DATE

ISSUE DATE: JUNE 2022
CONTRACT NO.: W912PP-22-R-0021
DESIGNED BY: B. SCHNEIDER
DRAWN BY: A. CLEAR
CHECKED BY: A. FORAN
SUBMITTED BY: E. OLNESS
SIZE: ANSI D
FILENAME: K-M9-923-M-001

US ARMY CORPS OF ENGINEERS
ALBUQUERQUE
ALBUQUERQUE, NEW MEXICO

JACOBS®
JACOBS ENGINEERING GROUP INC.
777 Main Street
Fort Worth, Texas 76102

COMBAT RESCUE HELICOPTER SIMULATOR FACILITY
KIRTLAND AIR FORCE BASE (AFB)
BERNALILLO COUNTY, NEW MEXICO

CRH SIMULATOR FACILITY ADAL
GENERAL NOTES AND SYMBOLS

SHEET ID
923
M-001

READY TO ADVERTISE

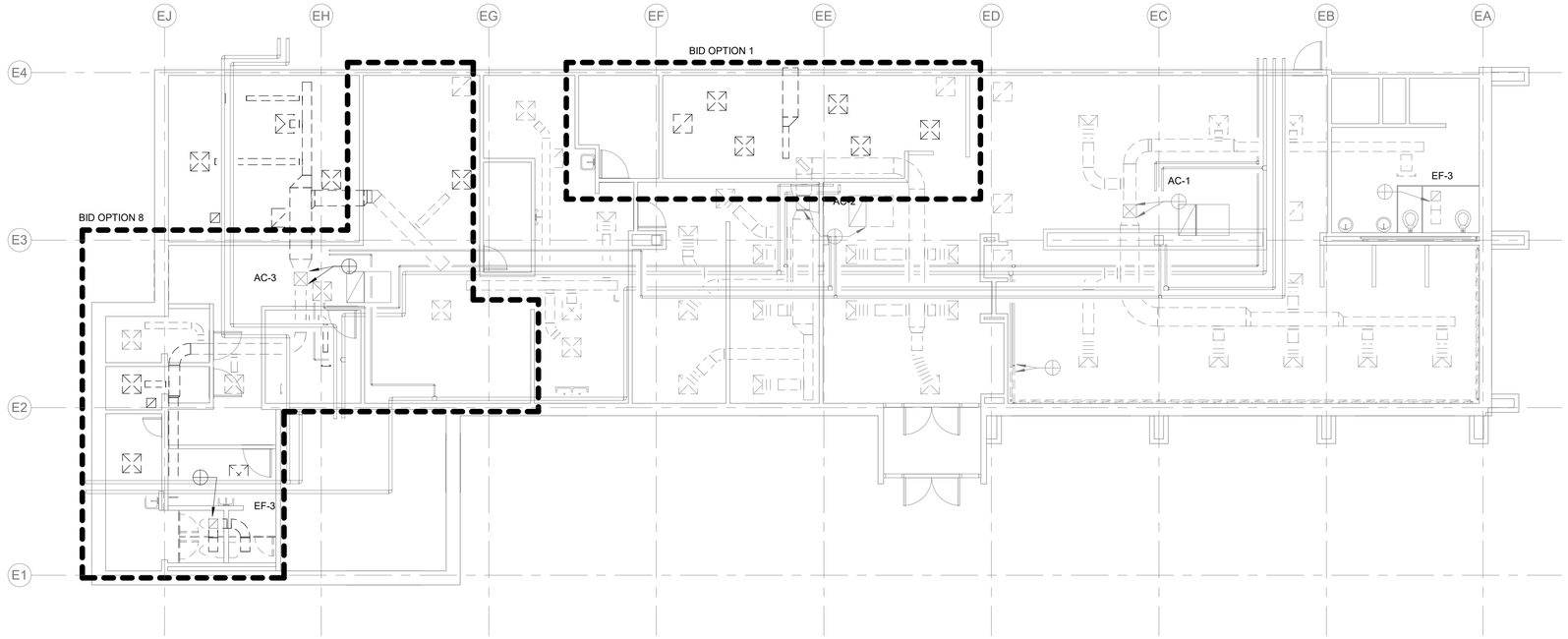

D1 OVERALL DEMOLITION PLAN - BID OPTION 1 & 8
1/8" = 1'-0"

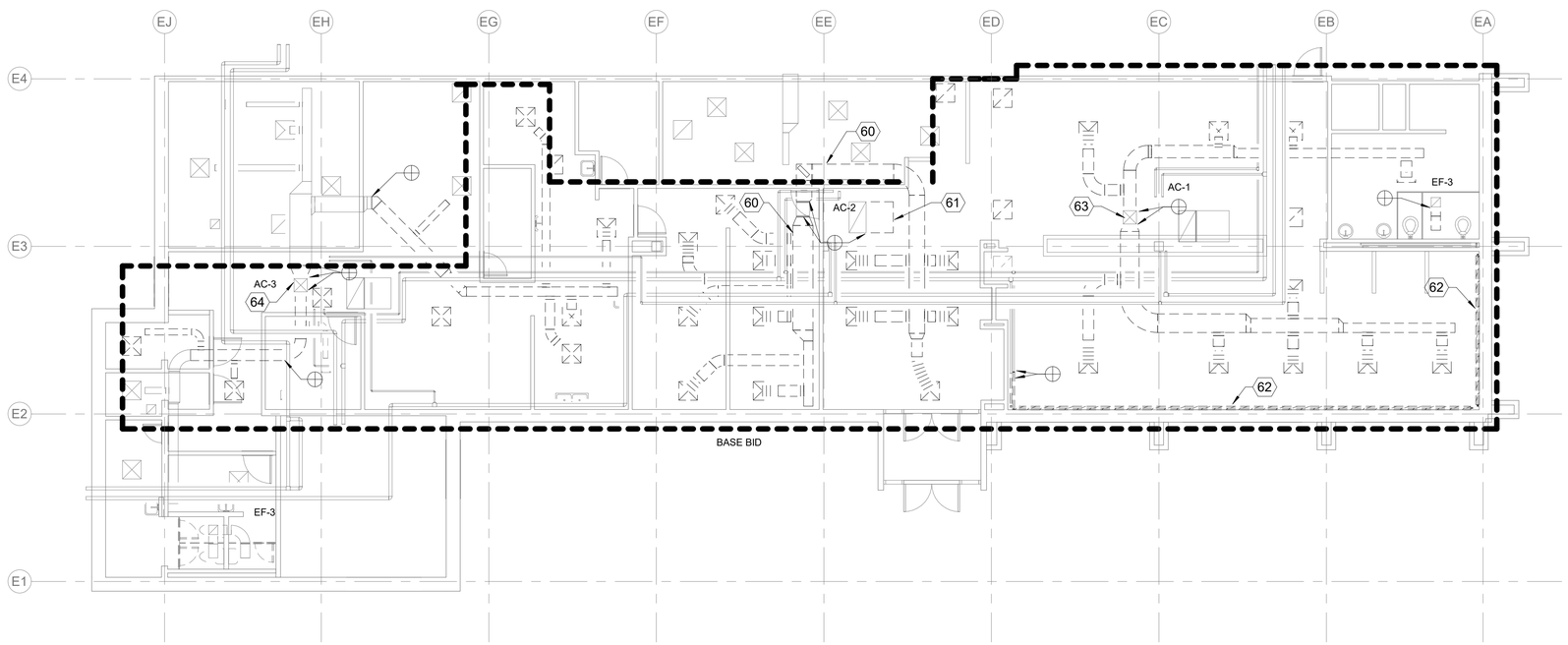

C1 OVERALL DEMOLITION PLAN - BASE BID
1/8" = 1'-0"

GENERAL NOTES - DEMOLITION PLAN

A	REMOVE DIFFUSERS AND DUCTS BACK TO THE RISERS TO THE AIR HANDLING UNITS
B	REMOVE CEILINGS AS REQUIRED WITHIN EXTENT OF DEMOLITION AREA.

KEYNOTES

60	REMOVE DUCTWORK ASSOCIATED FROM AC-2 WITHIN PROJECT AREA. ABANDON IN PLACE AC-2. CAP THE AC-2 SUPPLY AND RETURN DUCTS.
61	REMOVE EXHAUST DUCTS BACK TO THE RISER.
62	REMOVE FIN TUBE CABINETS.
63	RETAIN EXISTING 17"x17" RISER DUCT UP TO AC-1.
64	RETAIN EXISTING 17"x17" RISER DUCT UP TO AC-3.

KEY PLAN

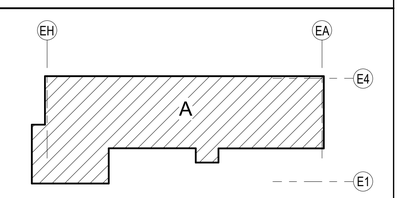

GRAPHIC SCALE

8 0 8 16 24
Scale: 3/32 INCH = 1 FOOT

PROJECT NORTH

PLAN NORTH

STATE OF TEXAS
BRANDEN M. SCHNEIDER
129852
LICENSED PROFESSIONAL ENGINEER
6.24.2021

US Army Corps of Engineers ®

MARK	DESCRIPTION	DATE

US ARMY CORPS OF ENGINEERS
ALBUQUERQUE
ALBUQUERQUE, NEW MEXICO

JACOBS
JACOBS ENGINEERING GROUP INC.
777 Main Street
Fort Worth, TX 76102

DESIGNED BY: B. SCHNEIDER
DRAWN BY: A. CLEAR
CHECKED BY: C. KORPASH
SUBMITTED BY: E. OLMESS
SIZE: ANSI D
ISSUE DATE: JUNE 2022
CONTRACT NO.: W912PP-22-R-0021
FILENAME: K4089-923-MD110

COMBAT RESCUE HELICOPTER SIMULATOR FACILITY
KIRTLAND AIR FORCE BASE (AFB),
BERNALILLO COUNTY, NEW MEXICO

CRH SIMULATOR FACILITY ADAL
OVERALL DEMOLITION PLAN

SHEET ID
923
MD110

READY TO ADVERTISE

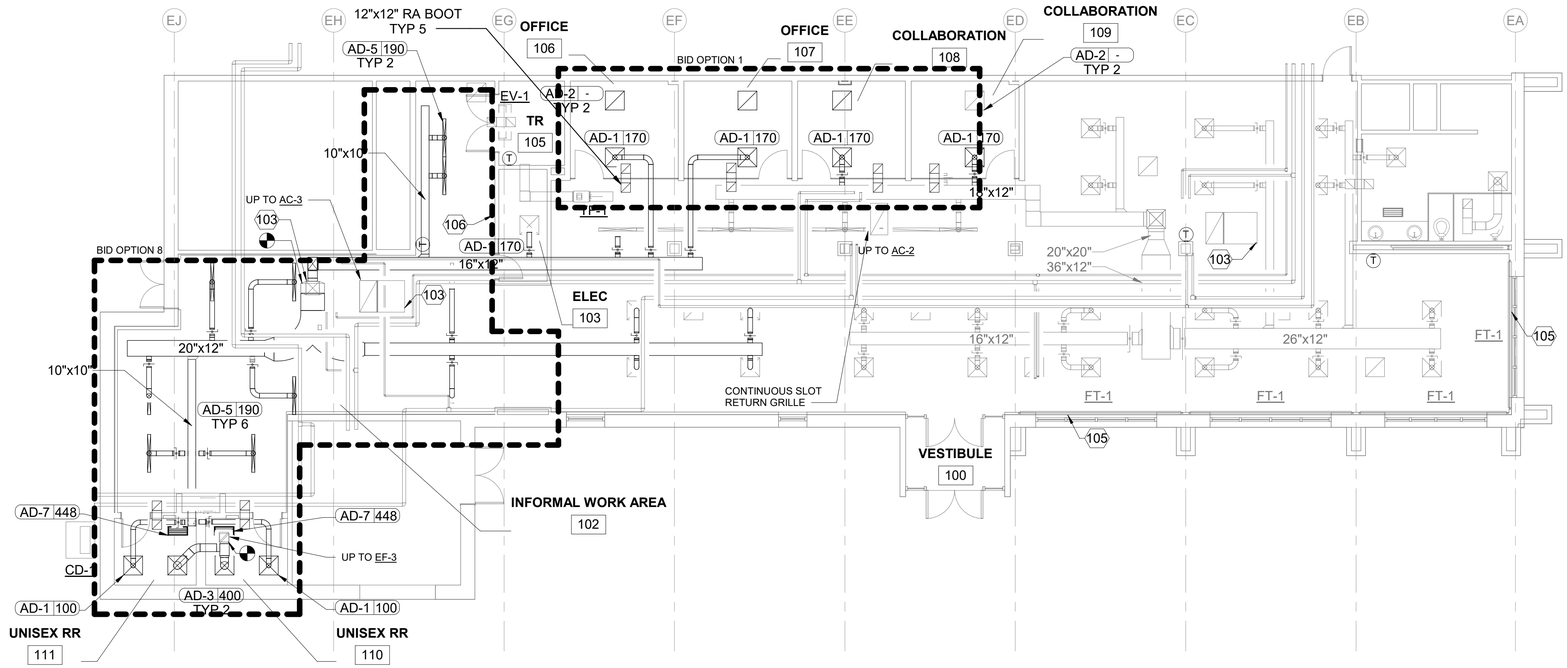

D1 FIRST FLOOR PLAN - OVERALL - BID OPTION 1 & 8

SCALE 1/8" = 1'-0"

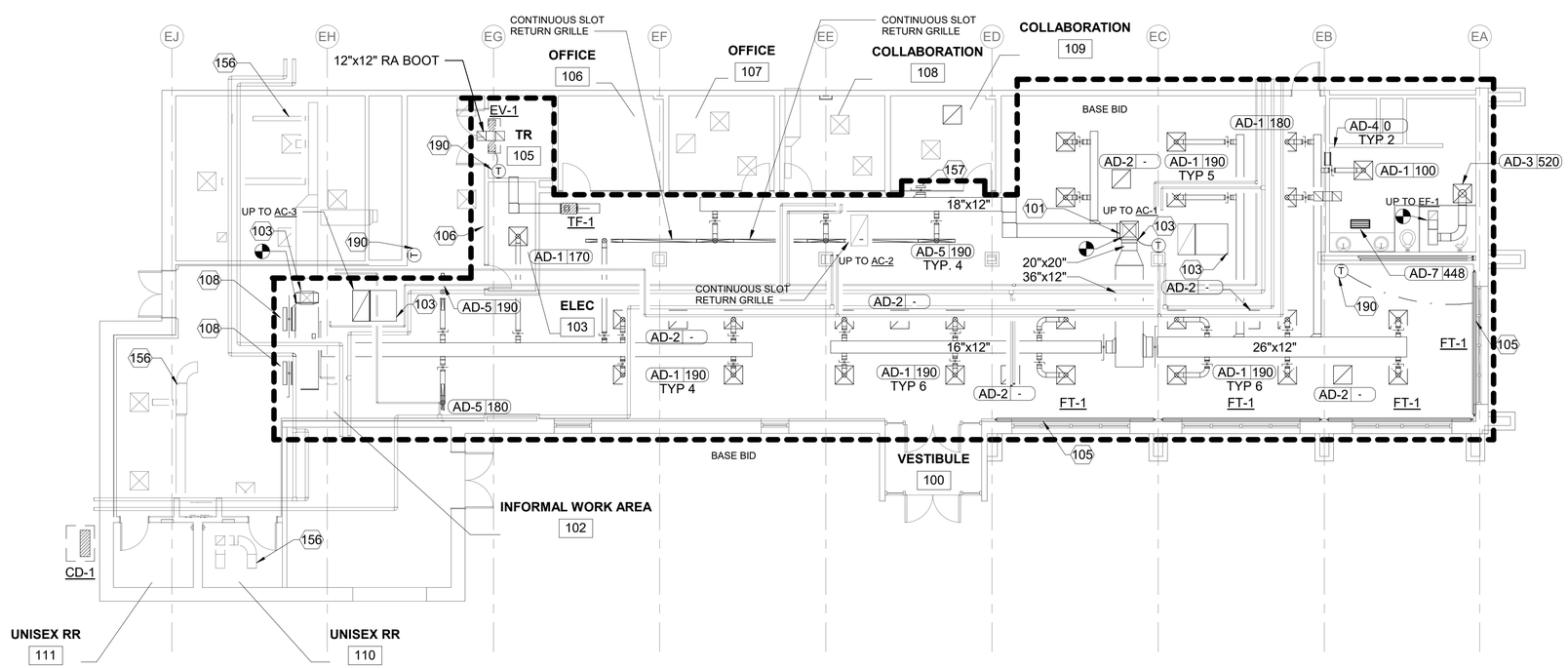

A1 FIRST FLOOR PLAN - OVERALL - BASE BID

SCALE 1/8" = 1'-0"

GENERAL NOTES - OVERALL PLAN

A	MAINTAIN MANUFACTURER'S RECOMMENDED CLEARANCES ON ALL EQUIPMENT.
B	COORDINATE WITH OTHER UTILITIES AND OBSTRUCTIONS TO AVOID INTERFERENCE WHEN ROUTING DUCTWORK. OFFSET DUCTWORK AS REQUIRED.
C	DUCT WORK TO BE ROUTED BELOW PIPING. FIELD VERIFY EXISTING PIPE ELEVATIONS AND RE-ROUTE EXISTING PIPES AS NECESSARY TO AVOID DUCT CONFLICTS.
E	EXISTING AC UNITS TO BE BALANCED TO ACCOMODATE NEW DUCT-WORK. AC CFM TO BE MEASURED PRIOR TO WORK AND AFTER. PROVIDE SHEAVE CHANGES TO ACHIEVE NEW AIR FLOW RATES AS REQUIRED.

KEYNOTES

101	17"x17" SA DUCT ROUTED DOWN FROM ROOF TRANSITIONED TO 24"x24" DUCT.
103	PROVIDE SMOKE DETECTOR AND SINGLE LOOP CONTROLLER. AHU TO SHUT DOWN UPON DETECTION OF SMOKE.
105	CONNECT FT-1 TO EXISTING PIPING FROM SLAB.
106	RELOCATE EXISTING JOHNSON HVAC CONTROLS PANEL TO THIS WALL.
108	12"X30" DUCT WITH BALANCING DAMPER WIRE MESH SCREEN TO DISCHARGE 1030 CFM OF EXCESS AIR FROM AC-3.
156	EXISTING DUCT IS SHOWN FOR INFORMATION ONLY. EXISTING DUCTWORK IS NOT CONNECTED TO THE SYSTEM OR USED IN HVAC DESIGN.
157	12"X10" DUCT WITH BALANCING DAMPER AND WIRE MESH SCREEN TO DISCHARGE 340 CFM OF EXCESS AIR FROM AC-1.
190	RELOCATE EXISTING THERMOSTATS TO LOCATIONS INDICATED ON DRAWINGS.

US Army Corps of Engineers ®

MARK	DESCRIPTION	DATE

ISSUE DATE: JUNE 2022
CONTRACT NO.: W912PP-22-R-0021

DESIGNED BY: B. SCHNEIDER
DRAWN BY: A. CLEAR
CHECKED BY: A. FORAN
SUBMITTED BY: E. OLNESS
SIZE: ANSI D
FILENAME: K489-923-MH110

US ARMY CORPS OF ENGINEERS
ALBUQUERQUE
ALBUQUERQUE, NEW MEXICO

JACOBS
JACOBS ENGINEERING GROUP INC.
777 Main Street
Fort Worth, TX 76102

KEY PLAN

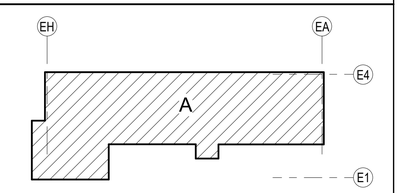

GRAPHIC SCALE

8 0 8 16

Scale: 1/8 INCH = 1 FOOT

PROJECT NORTH

PLAN NORTH

STATE OF TEXAS
BRANDEN M. SCHNEIDER
129852
LICENSED
PROFESSIONAL ENGINEER
6.24.2021

COMBAT RESCUE HELICOPTER SIMULATOR FACILITY
KIRTLAND AIR FORCE BASE (AFB),
BERNALILLO COUNTY, NEW MEXICO

CRH SIMULATOR FACILITY ADAL
OVERALL FLOOR PLAN - LEVEL 1

SHEET ID
923
MH110

READY TO ADVERTISE

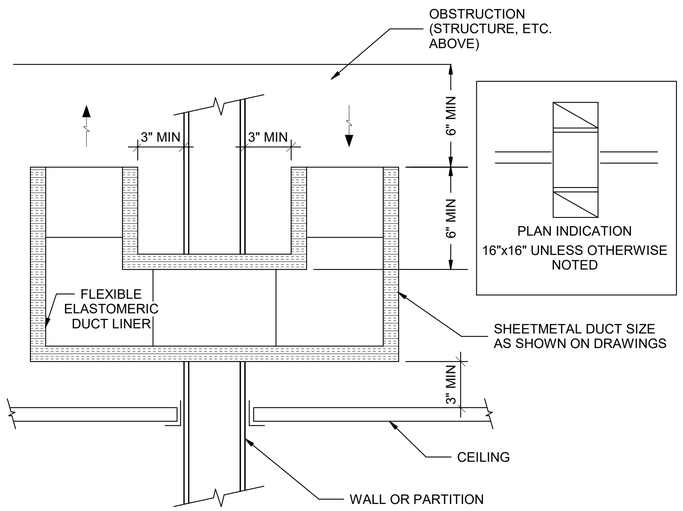

D1 RETURN AIR SOUND BOOT DETAIL

SCALE NTS

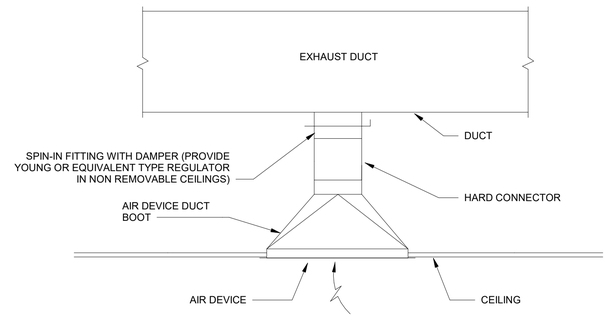

NECK SIZE	CFM RANGE
6" ø	0-75
8" ø	76-175
10" ø	176-300
12" ø	301-500

D4 EXHAUST AIR DEVICE CONNECTION DETAIL

SCALE NTS

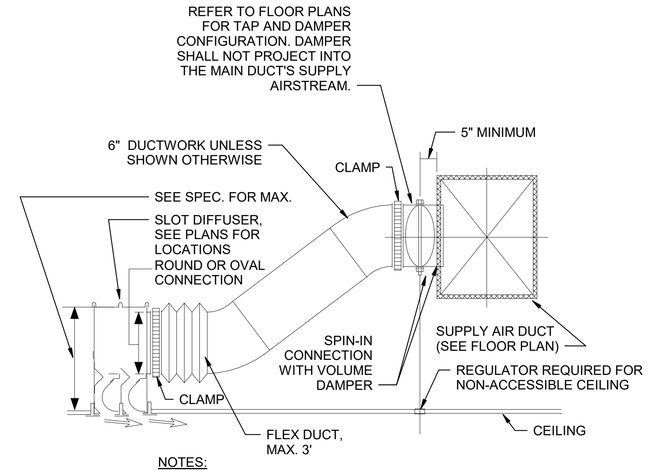

NOTES:

1. ALL EXPOSED SURFACE SHALL BE PAINTED FLAT BLACK.
2. SEE SPECIFICATION FOR CONSTRUCTION REQUIREMENTS.

D7 SLOT DIFFUSER DETAIL

SCALE NTS

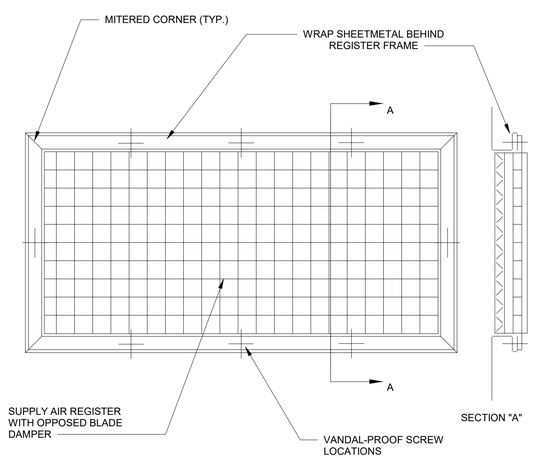

A1 TYPICAL SUPPLY/RETURN AIR REGISTER DETAIL

SCALE NTS

NOTE:
MINIMUM BEND IN FLEXIBLE DUCTWORK SHALL NOT BE LESS THAN ONE DUCT DIAMETER BEND RADIUS BASED ON THE INSIDE DUCT DIAMETER.

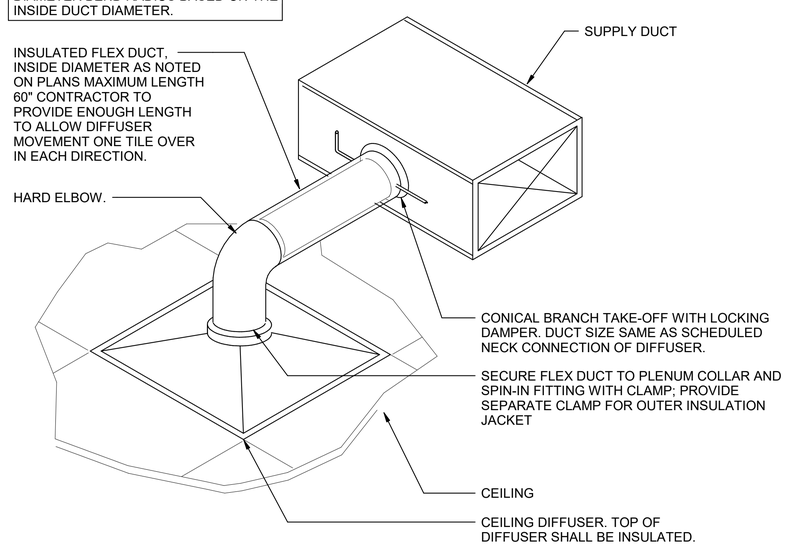

A4 CEILING DIFFUSER DETAIL

SCALE NTS

STATE OF TEXAS
BRANDEN M. SCHNEIDER
129852
LICENSED
PROFESSIONAL ENGINEER
6.24.2021

US Army Corps of Engineers ®

MARK	DESCRIPTION	DATE

DESIGNED BY: B. SCHNEIDER
DRAWN BY: A. CLEAR
CHECKED BY: A. FORAN
SUBMITTED BY: E. OLMESS
SIZE: ANSI D
FILENAME:
ISSUE DATE: JUNE 2022
CONTRACT NO.: W912PP-22-R-0021

US ARMY CORPS OF ENGINEERS
ALBUQUERQUE
ALBUQUERQUE, NEW MEXICO

JACOBS
JACOBS ENGINEERING GROUP INC.
777 Main Street
Fort Worth, TX 76102

COMBAT RESCUE HELICOPTER SIMULATOR FACILITY
KIRTLAND AIR FORCE BASE (AFB)
BERNALILLO COUNTY, NEW MEXICO

CRH SIMULATOR FACILITY ADAL
MECHANICAL DETAILS

SHEET ID
923
M-501

READY TO ADVERTISE

EXISTING EQUIPMENT SCHEDULE

MARK	AIRFLOW (CFM)	ESP (IN WG)	MOTOR (HP)
AC-1	4420	1.25	3
AC-3	3550	1.25	3
EF-3	800	0.25	1/4
EF-1	520	0.25	1/4

HOT WATER FINNED TUBE CABINET SCHEDULE

MARK	CAPACITY (BTUH/FT)	AVERAGE TEMP (F)	ENTERING AIR TEMP (F)	FLOW (GPM)	CABINET	TOP OF CABINET MOUNTING HEIGHT (IN)	BASIS OF DESIGN
FT-1	810	170	65	4.1	14" SLOPE TOP	18	RITTLING SBG3, 3/4" COPPER, 2-3/4" X 4" FIN, 40 FPI, SINGLE TIER

NOTES:
1. PROVIDE SINGLE CONTINOUS CASEMENT FOR FT-1. MATCH ARCHITECTURAL FINISH.

AIR TERMINAL DEVICE SCHEDULE

MARK	SERVICE	DESCRIPTION	MATERIAL	NECK SIZE	MAXIMUM NECK VELOCITY (FPM)	FACE SIZE	VELOCITY PRESSURE (IN W.C.)	MAX TOTAL PRESSURE (IN W.C.)	NEGATIVE STATIC PRESSURE (IN. W.C.)	MAXIMUM THROW (FT)	MAXIMUM FLOW (CFM)	MAXIMUM NOISE CRITERIA	NOTES
AD-1	SUPPLY	CEILING MOUNTED	STEEL	6"Ø	1000	24"x24"	0.06	0.10	0.00	9	200	24	1
AD-2	RETURN	CEILING MOUNTED	STEEL	22"x22"	300	24"x24"	0.01	0.00	0.03	0	1000	13	3
AD-3	EXHAUST	CEILING MOUNTED	STEEL	10"Ø	1000	24"x24"	0.06	0.00	0.36	0	545	33	1
AD-4	RETURN	WALL MOUNTED	STEEL	16"x14"	300	16"x14"	0.01	0.00	0.11	0	450	41	2
AD-5	SUPPLY	CEILING MOUNTED	STEEL	6"Ø	1000	48"x4"	0.06	0.09	0.00	23	200	-	4
AD-6	RETURN	CEILING MOUNTED	STEEL	96"x4"	400	96"x4"	0.06	0.00	0.06	0	500	21	5
AD-7	TRANSFER	CEILING MOUNTED	ALUMINUM	16"x14"	300	16"x14"	0.01	0.00	0.11	0	450	41	2

NOTES:
1. BASIS OF DESIGN: TITUS TMS
2. BASIS OF DESIGN: TITUS 23R
3. BASIS OF DESIGN: TITUS PDR
4. BASIS OF DESIGN: TITUS MLT-37
5. BASIS OF DESIGN: TITUS MLR. LINEAR SLOT DIFFUSER WITH TWO 3/4" SLOTS

FAN SCHEDULE

MARK	SERVICE	MAX AIRFLOW (CFM)	ESP (IN H2O)	MOTOR (HP)	VOLTAGE	PHASE	MAX UNIT WEIGHT (LBS)	BASIS OF DESIGN
TF-1	TRANSFER AIR	150	0.50	1/4	115	1	49	GREENHECK SQ-97

COMPRESSOR/CONDENSER UNIT SCHEDULE

MARK	SERVES	AIRFLOW (CFM)	TOTAL CAPACITY (BTUH)	ELECTRICAL			MAX UNIT SIZE (IN)			MAX UNIT WEIGHT (LBS)	BASIS OF DESIGN
				VOLTAGE	PHASE	MCA	L	W	H		
CD-1	EV-1	1327 CFM	12000	115	1	16	34	12	24	96	MITSUBISHI MU-A12WA

EVAPORATOR UNIT SCHEDULE

MARK	SERVES	AIRFLOW (CFM)	TOTAL CAPACITY (BTUH)	ELECTRICAL			MAX UNIT SIZE (IN)			MAX UNIT WEIGHT (LBS)	BASIS OF DESIGN
				VOLTAGE	PHASE	MCA	L	W	H		
EV-1	TELECOM ROOM	406 CFM	12000	115	1	1.2	31	9	12	23	MITSUBISHI MS-112WA

NOTES:
1. EV-1 RECIEVES POWER FROM CD-1 THROUGH FIELD SUPPLIED INTERCONNECTED WIRING

STATE OF TEXAS
BRANDEN M. SCHNEIDER
129852
LICENSED PROFESSIONAL ENGINEER
6.24.2021

US Army Corps of Engineers ®

MARK	DESCRIPTION	DATE

ISSUE DATE: JUNE 2022
CONTRACT NO.: W912PP-22-R-0021

DESIGNED BY: J. PERRY
DRAWN BY: J. MCKINNEY
CHECKED BY: J. HUNEYCUTT
SUBMITTED BY: E. OLNESS
SIZE: ANSI D
FILENAME:

US ARMY CORPS OF ENGINEERS
ALBUQUERQUE
ALBUQUERQUE, NEW MEXICO

JACOBS
JACOBS ENGINEERING GROUP INC.
777 Main Street
Fort Worth, Texas 76102

COMBAT RESCUE HELICOPTER SIMULATOR FACILITY
KIRTLAND AIR FORCE BASE (AFB),
BERNALILLO COUNTY, NEW MEXICO

CRH SIMULATOR FACILITY ADAL
MECHANICAL SCHEDULES

SHEET ID
923
M-601

READY TO ADVERTISE

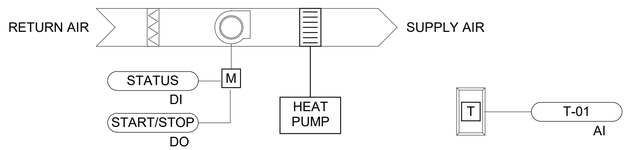

RUN CONDITIONS - SCHEDULED:
DUCTLESS SPLIT SYSTEM HEAT PUMP UNIT SHALL RUN CONTINUOUSLY. THE UNIT SHALL RUN SUBJECT TO ITS OWN INTERNAL SAFETIES AND CONTROLS TO MAINTAIN A TEMPERATURE SETPOINT AS INDICATED ON M-001. AN ALARM SHALL BE GENERATED IF THE SPACE TEMPERATURE EXCEEDS 80°F (ADJUSTABLE).

UNIT SHUTDOWN:
THE UNIT WILL SHUT DOWN IF ONE OF THE FOLLOWING CONDITIONS OCCURS. UNIT SHUTDOWN WILL ALIGN THE UNIT COMPONENTS TO THE FOLLOWING (REFER TO CONTROL DIAGRAM FOR ABBREVIATIONS): SUPPLY FAN (SF) OFF AND CONDENSING UNIT OFF. UPON SHUTDOWN ON ONE OF THE FOLLOWING FAULT CONDITIONS.

1. AT/FP EMERGENCY SHUTDOWN:
   a. AN EMERGENCY SHUTDOWN SIGNAL FROM A CENTRAL PUSH BUTTON SWITCH WHEN A CHEMICAL OR BIOLOGICAL THREAT IS IMMINENT.

E1 AC-1, AC-3 CONTROL DIAGRAM
NTS

EXISTING HEATING AND COOLING:

AIR CONDITIONING SYSTEM (FOR INFORMATION ONLY):
ALL EXISTING ROOFTOP UNITS ARE PROVIDED WITH COMPLETE FACTORY WIRED CONTROLS, VALVES AND DAMPER ACTUATORS. EACH EXISTING UNIT PROVIDES HEATING OR COOLING (NON-SIMULTANEOUS) TO MAINTAIN 55 DEG. F DISCHARGE AIR DURING THE COOLING SEASON AND 85 DEG. DISCHARGE AIR DURING THE HEATING SEASON. EACH UNIT IS CAPABLE OF 100% ECONOMIZER CYCLE COOLING TO AUTOMATICALLY PROVIDE "FREE COOLING" USING OUTSIDE AIR WHEN AMBIENT CONDITIONS ALLOW. WHEN THE ECONOMIZER CYCLE IS 100% IN OPERATION, THE MOTORIZED VALVES AT THE HEATING AND COOLING COILS SHALL BE CLOSED. AS THE AMBIENT TEMPERATURE INCREASES, THE COIL VALVES SHALL MODULATE AS REQUIRED TO SUPPLEMENT THE OUTSIDE AIR TEMPERATURE IN MAINTAINING THE PRE-SET DISCHARGE AIR TEMPERATURE.

HEATING SYSTEM OPERATION (FOR INFORMATION ONLY):
THE EXISTING ROOFTOP AIR CONDITIONING UNITS PROVIDE VENTILATION AND SUPPLEMENTAL HEATING DURING THE HEATING SEASON. THE EXISTING HOT WATER BASEBOARD HEATING SYSTEM SHALL CONTINUE TO BE THE MAIN SOURCE FOR HEATING THE FACILITY. EXISTING HOT WATER ZONE PUMPS CIRCULATE WATER THRU THE ELEMENTS ON A SIGNAL FROM THE EXISTING HEATING THERMOSTATS. THE HOT WATER HEATING COILS IN THE NEW ROOFTOP UNITS PROVIDE 85 DEG. F TEMPERED AIR TO THE FACILITY CONSTANTLY DURING OCCUPIED PERIODS.

SMOKE DETECTION:
VERIFY AHU'S HAVE DUCT SMOKE DETECTOR, PROVIDE DUCT SMOKE DETECTOR IF NOT PRESENT. AHU'S TO SHUT DOWN IF SMOKE DETECTED. DETECTION OF SMOKE TO TRIGGER ALARM BUILDING CONTROL PANEL.

EXISTING CENTRAL AIR COOLED CHILLER SYSTEM:

OPERATION (FOR INFORMATION ONLY):
THE EXISTING CENTRAL CHILLER SYSTEM IS PROVIDED WITH A UNIT MOUNTED PROGRAMMABLE CONTROLLER, FACTORY WIRED AND PIPED TO MAINTAIN 45 DEG. F CHILLED WATER DISCHARGE TEMPERATURE. THE CONTROLLER PROVIDES ALL ALARMS AND STATUS OPERATIONS OUTPUT FOR MONITORING SYSTEM OPERATION THRU THE KAFB BACS CENTRAL CONTROL SYSTEM.

B1 EXISTING SYSTEM CONTROLS
SCALE NTS

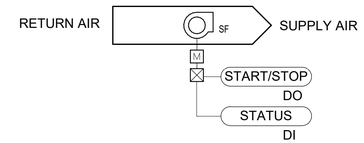

SUPPLY FAN SEQUENCE OF OPERATION

UNIT CONFIGURATION:
SUPPLY FAN SHALL SERVE AS PRESSURIZATION FOR TELECOM ROOM AS IDENTIFIED ON PLANS.

RUN CONDITIONS - CONTINUOUS:
THE SUPPLY FAN SHALL RUN TO MAINTAIN PRESSURIZATION OF THE TELECOM ROOM AS COMMANDED BY THE BASE BAS OPERATOR INTERFACE.

FAN:
THE FAN SHALL HAVE A USER DEFINABLE MINIMUM RUNTIME OF 10 MINUTES (ADJUSTABLE).

FAN STATUS:
THE BAS SHALL MONITOR THE FAN STATUS AND GENERATE AN ALARM AT THE USER INTERFACE UPON THE FOLLOWING CONDITIONS:
1. FAN FAILURE: COMMANDED ON, BUT THE STATUS IS OFF.
2. FAN IN HAND: COMMANDED OFF, BUT THE STATUS IS ON.
3. FAN RUNTIME EXCEEDED: FAN STATUS RUNTIME EXCEEDS A USER DEFINABLE LIMIT (ADJUSTABLE).

UNIT SHUTDOWN:
THE BAS SHALL SHUTDOWN THE UNIT AND GENERATE AN ALARM AT THE USER INTERFACE UPON ONE OF THE FOLLOWING CONDITIONS:
1. COMMANDED OFF BY THE BAS.
2. FAN: FAN FAILURE AS INDICATED ABOVE.

D6 TRANSFER FAN CONTROL DIAGRAM
SCALE NTS

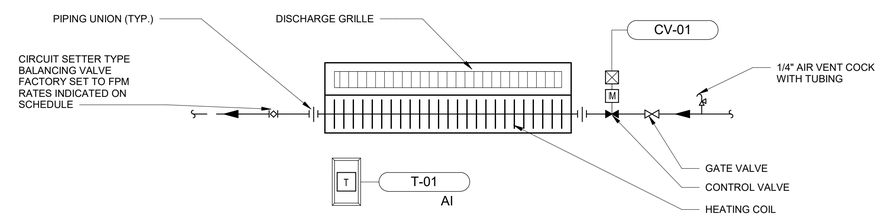

FINNED TUBE RADIATOR (FT-1) SEQUENCE OF OPERATION

FINNED TUBE RADIATOR RUN CONDITIONS:
UNIT SHALL OPERATE WHENEVER THE OUTSIDE AIR TEMPERATURE IS BELOW 40ºF. UNIT MOUNTED THERMOSTATIC CONTROL VALVE SHALL OPEN AND CLOSE TO MAINTAIN SPACE TEMPERATURE OF 55ºF (ADJUSTABLE).

B6 FINNED TUBE RADIATOR CONTROL DIAGRAM AND SEQUENCE
NTS

STATE OF TEXAS
BRANDEN M. SCHNEIDER
129852
LICENSED
PROFESSIONAL ENGINEER
6.24.2021

US Army Corps of Engineers ®

MARK	DESCRIPTION	DATE

ISSUE DATE: JUNE 2022
CONTRACT NO.: W912PP-22-R-0021
DESIGNED BY: J. PERRY
DRAWN BY: J. MCKINNEY
CHECKED BY: J. HUNEYCUTT
SUBMITTED BY: E. OLNESS
ANSI D
FILENAME:

US ARMY CORPS OF ENGINEERS
ALBUQUERQUE
ALBUQUERQUE, NEW MEXICO

JACOBS
JACOBS ENGINEERING GROUP INC.
777 Main Street
Fort Worth, TX 76102

COMBAT RESCUE HELICOPTER SIMULATOR FACILITY
KIRTLAND AIR FORCE BASE (AFB),
BERNALILLO COUNTY, NEW MEXICO

CRH SIMULATOR FACILITY ADAL
MECHANICAL CONTROLS

SHEET ID
923
M-801

READY TO ADVERTISE

ELECTRICAL LEGEND

- LOWER CASE DENOTES THE SWITCH THAT CONTROLS FIXTURE
- a A2 — LUMINAIRE TYPE DESIGNATION
- SYMBOL DENOTES GENERAL TYPE OF LUMINAIRE
- NT — UNSWITCHED NIGHT LIGHT (ON 24 HOURS)
- LED INDUSTRIAL STRIP FIXTURE, SUSPENSION MOUNTED
- LED DOWNLIGHT FIXTURE, CEILING OR PENDENT MOUNTED AS INDICATED
- LED DOWNLIGHT LIGHTING FIXTURE WITH INTEGRAL EMERGENCY DRIVER
- LED LIGHTING FIXTURE WALL MOUNTED, MOUNTING HEIGHT AS INDICATED
- LED LIGHTING FIXTURE WALL MOUNTED WITH INTEGRAL EMERGENCY DRIVER, MOUNTING HEIGHT AS INDICATED
- LED 2X4 LIGHTING FIXTURE
- LED 2X4 LIGHTING FIXTURE WITH INTEGRAL EMERGENCY DRIVER
- LED 2X2 LIGHTING FIXTURE
- LED 2X2 LIGHTING FIXTURE WITH INTEGRAL EMERGENCY DRIVER
- LED LINEAR LIGHTING FIXTURE
- LED LINEAR LIGHTING FIXTURE WITH INTEGRAL EMERGENCY DRIVER
- EXIT LIGHT, CEILING MOUNTED, SHADING INDICATES FACES DIRECTIONAL ARROWS WHERE INDICATED
- EXIT LIGHT, WALL MOUNTED, SHADING INDICATES FACES, DIRECTIONAL ARROWS WHERE INDICATED. MOUNT BOTTOM OF FIXTURE 6" ABOVE TOP OF DOOR UNLESS OTHERWISE NOTED
- $ — WALL SWITCH. WHERE NO SUBSCRIPT PRESENT, SINGLE POLE 20A SWITCH. WHERE SUBSCRIPT IS PRESENT, SUBSCRIPT DENOTES THE FOLLOWING:
  - OS - LOW VOLTAGE DUAL TECHNOLOGY OCCUPANCY SENSOR SWITCH
  - D - LOW VOLTAGE MULTI SCENE DIMMING SWITCH
  - 3 - THREE WAY
  - VS - LOW VOLTAGE DUAL TECHNOLOGY VACANCY SENSOR SWITCH WITH RAISE / LOWER DIMMING
- OS — DUAL TECHNOLOGY (ULTRASONIC AND PASSIVE INFRARED) LOW VOLTAGE SENSOR, CEILING MOUNTED
- DS — DAYLIGHT SENSOR
- DAYLIGHT ZONE
- X: XX — PANEL NAME: CIRCUIT NUMBER
- SYSTEM GROUND, SIZE IN ACCORDANCE WITH NEC ARTICLE 250
- TW — GROUND ROD, TW INDICATES TEST WELL
- LIGHTNING PROTECTION CONDUCTORS. SEE EG DRAWINGS
- AIR TERMINAL
- PANELBOARD - MH IN ACCORDANCE WITH NEC
- T — DRY TYPE TRANSFORMER
- SERVICE TRANSFOMER
- SPD — SURGE PROTECTIVE DEVICE
- RC — LOW VOLTAGE ROOM CONTROLLER (LIGHTING AND RECEPTACLES)
- 20 AMP DUPLEX RECEPTACLE, SUBSCRIPT DENOTES THE FOLLOWING:
  - TV - DENOTES FOR TELEVISION. COORDINATE MOUNTING WITH TV OUTLET
  - S - SWITCHED RECEPTACLE WITH AUTOMATIC CONTROL
- 20 AMP DUPLEX GROUND FAULT CIRCUIT INTERRUPTER RECEPTACLE, SUBSCRIPT DENOTES THE FOLLOWING:
  - WP - DENOTES WEATHER PROOF HOUSING, UOI
  - EWC - DENOTES DEDICATED CRICUIT FOR ELECTRIC WATER COOLER. COORDINATE MOUNTING WITH EQUIPMENT PROVIDED.
- L6-30R SPECIAL RECEPTACLE.
- OR — RECEPTACLES MOUNTED ABOVE COUNTERS OR BACKSPLASH. COORDINATE WITH ARCHITECTURAL ELEVATION DRAWINGS.
- OR — HALF-SWITCHED RECEPTACLE. ONE(OR TWO) OUTLET(S) SWITCHED, AND ONE(OR TWO) OUTLET(S) UNSWITCHED.
- OR — FULLY SWITCHED RECEPTACLE. ALL OUTLETS SWITCHED.
- 20 AMP QUAD RECEPTACLE, MH 1'-6", UON OR UOI
- 20 AMP CEILING MOUNTED RECEPTACLE OUTLET
- CATV — RECESSED COMBINATION FLOOR DUPLEX RECEPTACLE (20 AMP) AND DUPLEX TELEPHONE OUTLET
- J — JUNCTION BOX, WALL MTD. MH 1'-6" UON.
  - FF - DENOTES FURNITURE FEED
- J J — JUNCTION BOX
  - FF - DENOTES FURNITURE FEED
- SM — MOTOR RATED SWITCH
- MOTOR DISCONNECT/SAFETY SWITCH SHALL BE RATED 30/3/NF/1 UNLESS OTHERWISE INDICATED.
  - '30' DENOTES SWITCH AMPERE RATING;
  - '3' DENOTES NUMBER OF POLES;
  - '1' DENOTES SWITCH ENCLOSURE'S RATING;
  - DENOTES FUSED; FUSE RATING SHALL BE IN ACCORDANCE WITH MANUFACTURER'S RECOMMENDATIONS.
- MOTOR STARTER
- B — BOILER EMERGENCY SHUT-OFF
- TTB CTB — FIRE-RETARDANT PLYWOOD BACKBOARD WITH NO ADDED UREA FORMALDEHYDE. SEE SPECIFICATIONS 01 33 29 FOR FSC CERTIFICATION REQUIREMENTS.
- WIRE/CONDUIT EXPOSED
- WIRE/CONDUIT CONCEALED IN CEILING, WALL, BENEATH FLOOR
- HOME RUN TO PANELBOARD WITH CIRCUIT DESIGNATION
- CONDUIT TURNED UP/CONDUIT TURNED DOWN

ABBREVIATIONS

A	AMPERS
AFF	ABOVE FINISHED FLOOR
C	CONDUIT
CATV	CABLE TELEVISION
CB	CIRCUIT BREAKER
CKT	CIRCUIT
COR	CONTRACTING OFFICER'S REPRESENTATIVE
CU	COPPER
EF	EXHAUST FAN
ELU	EMERGENCY LIGHT UNIT
EWC	ELECTRIC WATER COOLER
FACP	FIRE ALARM CONTROL PANEL
GFCI	GOVERNMENT FURNISHED, CONTRACTOR INSTALLED
G	GROUND
GFI	GROUND FAULT INTERRUPTER
GFP	GROUND FAULT INTERRUPTER
GND	GROUND
HACR	HEATING AND AIR CONDITIONING REFRIGERATION
HP	HORSEPOWER
HZ	HERTZ
IDS	INTRUSION DETECTION SYSTEM
IMC	INTERMEDIATE METAL CONDUIT
KWH	KILOWATT HOUR
LED	LIGHT EMITTING DIODE
LT	LIGHT
LVS	LOW VOLTAGE SWITCH
MCB	MOLDED CASE BREAKER
MD	MOUNTING DISTANCE
MFR	MANUFACTURER
MH	MOUNTING HEIGHT
MLO	MAIN LUGS ONLY
MNS	MASS NOTIFICATION SYSTEM
MTD	MOUNTED
NEC	NATIONAL ELECTRICAL CODE
NF	NON FUSED
NO	NUMBER
NTS	NOT TO SCALE
OS	OCCUPANCY SENSOR
PAF	PAINTED AFTER FABRICATION
PH	PHASE
PIR	PASSIVE INFRARED
R/W	RACEWAY
SER	SERVICE ENTRANCE RATED
SPD	SURGE PROTECTIVE DEVICE
TR	TRANSFORMER
TVSS	TRANSIENT VOLTAGE SURGE SUPPRESSOR
TYP	TYPICAL
UL	UNDERWRITERS LABORATORY
UOI	UNLESS OTHERWISE INDICATED
UON	UNLESS OTHERWISE NOTED
V	VOLT
VT	VARIABLE AIR VOLUME TERMINAL UNIT
W, WP	WEATHERPROOF

- DRAWOUT CIRCUIT BREAKER OVER 600V
- DRAWOUT CIRCUIT BREAKER
- DRAWOUT FUSES
- CIRCUIT BREAKER
- FUSED DISCONNECT SWITCH
- DISCONNECT SWITCH
- FUSED DRAWOUT CIRCUIT BREAKER
- FUSE
- CONTACT
- 50N 51N — PROTECTIVE RELAY WITH ANSI/IEEE DEVICE NUMBERS
- POWER TRANSFORMER WITH VOLTAGES AS INDICATED
- SHIELDED K RATED POWER TRANSFORMER WITH VOLTAGES AS INDICATED
- 400/5 — CURRENT TRANSFORMER, QUANTITY AND RATIO AS INDICATED.
- 50/5 — GROUND CURRENT, ZERO SEQUENCE TYPE TRANSFORMER. RATIO AS INDICATED.
- 1 — POTENTIAL TRANSFORMER, QUANTITY AS INDICATED.
- 1 — DRAWOUT POTENTIAL TRANSFORMER, QUANTITY AS INDICATED.
- GROUND CONNECTION
- THERMAL OVERLOADS
- SPD — SURGE PROTECTION DEVICE
- AM — AMMETER
- WM — WATTMETER
- KK — KIRK KEY INTERLOCK
- CM — CIRCUIT METER
- PF — POWER FACTOR METER
- TB — TERMINAL BLOCK
- CS — CONTROL SWITCH
- M — MULTIFUNCTION METER AS SPECIFIED.
- LIGHTNING ARRESTOR
- TRANSFORMER CONNECTION DELTA-RESISTANCE GROUNDED WYE
- TRANSFORMER CONNECTION DELTA-GROUNDED WYE
- G — GENERATOR
- N E L — AUTOMATIC TRANSFER SWITCH, AS NOTED
- PANELBOARD
- POWER FACTOR CORRECTION CAPACITOR
- DRAWOUT STAB
- AC MOTOR

GENERAL NOTES

1. MOUNTING HEIGHT, UNLESS OTHERWISE NOTED, IS TO CENTER LINE OF EQUIPMENT.
2. MOUNT OUTLET BOXES SO THAT NONE OCCUR BACK TO BACK IN WALLS.
3. MECHANICAL EQUIPMENT IS SHOWN IN APPROXIMATE LOCATIONS. FOR EXACT LOCATIONS OF MECHANICAL EQUIPMENT AND PIPING, SEE MECHANICAL DRAWINGS. PROVIDE DISCONNECT SWITCHES AS REQUIRED BY THE NATIONAL ELECTRICAL CODE EVEN IF NOT INDICATED ON THE ELECTRICAL DRAWINGS.
4. COORDINATE THE LOCATIONS AND MOUNTING HEIGHTS OF LIGHTING FIXTURES IN MECHANICAL AND ELECTRICAL ROOMS WITH THE FINAL LOCATIONS OF PIPES, DUCTS AND OTHER EQUIPMENT FOR BEST ARRANGEMENT. FIXTURES SHALL BE EASILY ACCESSIBLE FOR RE-LAMPING.
5. CONDUCTOR AND CONDUIT SIZES ARE BASED ON COPPER CONDUCTORS WITH THWN INSULATION IN EMT CONDUIT. CIRCUIT BREAKERS, TERMINALS, ETC. SHALL BE RATED AND MARKED FOR 75 DEGREES MINIMUM. ADJUST CONDUIT SIZES BASED ON ACTUAL TYPE OF CONDUCTORS AND CONDUIT INSTALLED. PROVIDE A MINIMUM 2#12, #12 GROUND IN 3/4" CONDUIT UNLESS OTHERWISE NOTED.
6. CIRCUIT NUMBERS ARE SHOWN ADJACENT TO ELECTRICAL DEVICES. WIRING SHALL BE IN ACCORDANCE WITH THE MANUFACTURERS RECOMMENDATIONS AND/OR REQUIREMENTS.
7. WIRING SHALL BE CONCEALED UNLESS EXPLICITLY INDICATED OTHERWISE.
8. REVISE PANELBOARD SCHEDULES ON AS-BUILT-DRAWING AND PANEL DIRECTORIES TO REFLECT FINAL INSTALLATION CONDITIONS.
9. SEAL PENETRATIONS THROUGH ROOFS, CEILINGS, FLOORS, WALLS AND FIRE WALLS TO MAINTAIN THE INTEGRITY OF THE AIR BARRIER, FIRE AND ACOUSTIC RATINGS OF THE ROOF, CEILINGS, WALLS AND FLOORS.
10. COMPONENTS WHICH CONSTITUTE AN ELECTRICAL SYSTEM SHALL BE FULLY COMPATIBLE WITH ONE ANOTHER AND SHALL BE APPROVED BY THE VARIOUS MANUFACTURERS FOR USE WITH ALL OTHER COMPONENTS WITHIN THE SYSTEM. (ONE EXAMPLE OF AN ELECTRICAL SYSTEM IS THE BUILDING LIGHTING SYSTEM COMPRISED OF FIXTURES, LAMPS, SWITCHES, BALLASTS, OCCUPANCY SENSORS AND DIMMING EQUIPMENT).
11. LOCATE RACEWAYS TO AVOID INTERFERENCE WITH DUCTS, PIPES, MECHANICAL EQUIPMENT, WITH REMOVAL OF CEILING TILES, OR WITH ACCESS TO EQUIPMENT WHICH REQUIRES PERIODIC ADJUSTMENT OR MAINTENANCE.
12. PROVIDE NAMEPLATES ON THE EXTERIOR OF ALL ELECTRICAL PANELS AND ENCLOSURES AS FOLLOWS: DEVICE ID, DEVICE RATING, POWER SOURCE, ARC FAULT DATA.
13. FOR DISCONNECT SWITCHES AND MOTOR STARTERS THE TOP LINE SHALL BE THE NAME/DESIGNATION OF THE EQUIPMENT BEING FED BY THE SWITCH/STARTER.
14. PROVIDE SEPARATE NEUTRALS FOR EACH CIRCUIT UTILIZING A NEUTRAL CONDUCTOR (DO NOT COMBINE NEUTRALS EXCEPT WHERE REQUIRED IN SYSTEMS FURNITURE).
15. PROVIDE EQUIVALENT CONDUIT PATHWAYS WHERE CABLE TRAY IS INTERRUPTED BY NON-ACCESSIBLE CEILINGS.
16. THE INTERRUPTING RATING OF THE PANELBOARDS AND ELECTRICAL EQUIPMENT SHALL BE INCREASED TO THE NEXT AVAILABLE RATING WHERE THERE IS NOT A RATING THAT IS EQUAL TO THE EQUIPMENTS LISTED SHORT CIRCUIT RATING.
17. PROVIDE GROUNDING CONDUCTORS IN ALL CONDUITS.
18. RACEWAYS CROSSING STRUCTURAL EXPANSION JOINTS OR SEISMIC JOINTS SHALL BE PROVIDED WITH SUITABLE EXPANSION FITTINGS OR OTHER SUITABLE MEANS TO COMPENSATE FOR THE BUILDING EXPANSION AND CONTRACTION AND TO PROVIDE FOR CONTINUITY OF GROUNDING.
19. RECEPTACLES THAT HAVE GFI PROTECTION ARE TO BE WIRED SUCH THAT THE LOSS OF POWER ON ONE RECEPTACLE DOES NOT AFFECT DOWNSTREAM RECEPTACLES.
20. UNLESS OTHERWISE NOTED, EMT CONDUIT SHALL BE INSTALLED IN EXPOSED DRY AREAS WITH COMPRESSION FITTINGS. CONDUIT SHALL BE INSTALLED IN ACCORDANCE WITH THE SPECIFICATIONS. EXPOSED OUTLET BOXES SHALL BE CAST METAL WITH THREADED FITTINGS AND COVERS THAT FIT FLUSH WITH THE EDGES OF THE OUTLET BOXES. EXPOSED CONDUIT AND OUTLET BOXES SHALL BE PAINTED TO MATCH THE WALLS OR WIRE MESH.
21. SCHEDULE ANY ELECTRICAL SERVICE DOWN TIME WITH CONTRACTING OFFICER WITH MINIMUM 14 DAY NOTICE. THE FACILITY SERVES AS A TELECOMMUNICATION NODE AND CAREFUL ATTENTION SHOULD BE TAKEN TO ENSURE SYSTEMS REMAIN OPERATIONAL.

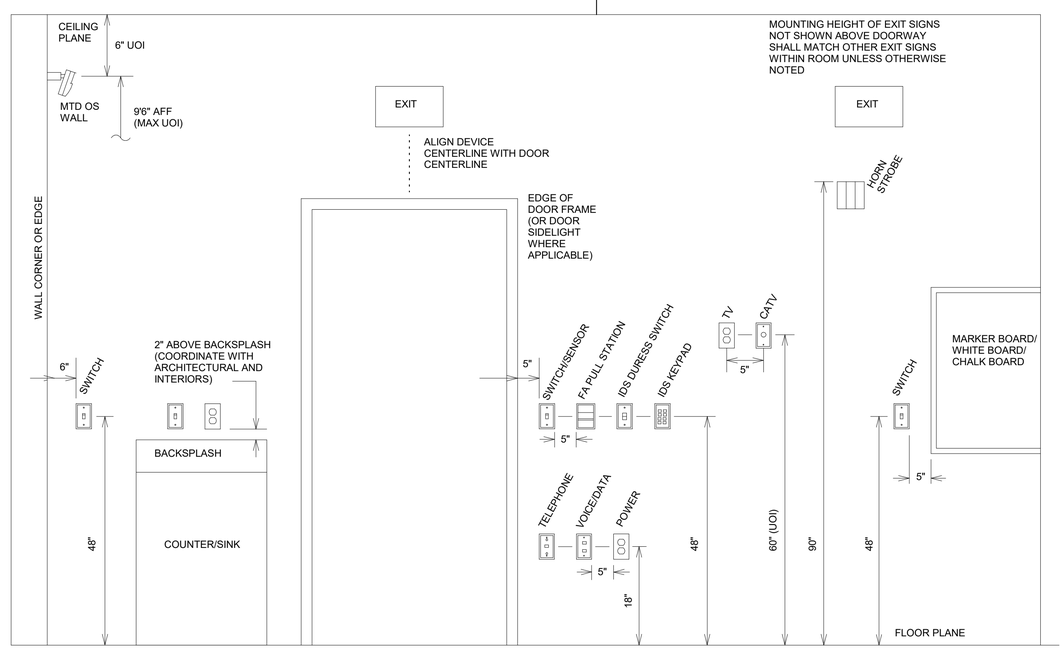

TYPICAL MOUNTING HEIGHTS

(NOT TO SCALE)

STATE OF TEXAS
AARON McWHORTER
100310
LICENSED PROFESSIONAL ENGINEER
6.24.2021

READY TO ADVERTISE

US Army Corps of Engineers ®

MARK	DESCRIPTION	DATE

DESIGNED BY: A. MCWHORTER
DRAWN BY: S. WALCHER
CHECKED BY: V. MONTELLANO
SUBMITTED BY: E. OLMESS
ANSI D

ISSUE DATE: JUNE 2022
CONTRACT NO.: W912PP-22-R-0021
FILENAME: K4069-923-E-001

US ARMY CORPS OF ENGINEERS
ALBUQUERQUE
ALBUQUERQUE, NEW MEXICO

JACOBS
JACOBS ENGINEERING GROUP INC.
777 Main Street
Fort Worth, TX 76102

COMBAT RESCUE HELICOPTER SIMULATOR FACILITY
KIRTLAND AIR FORCE BASE (AFB)
BERNALILLO COUNTY, NEW MEXICO
PARTIAL RENOVATION BUILDING 923
GENERAL NOTES AND SYMBOLS

SHEET ID
923
E-001

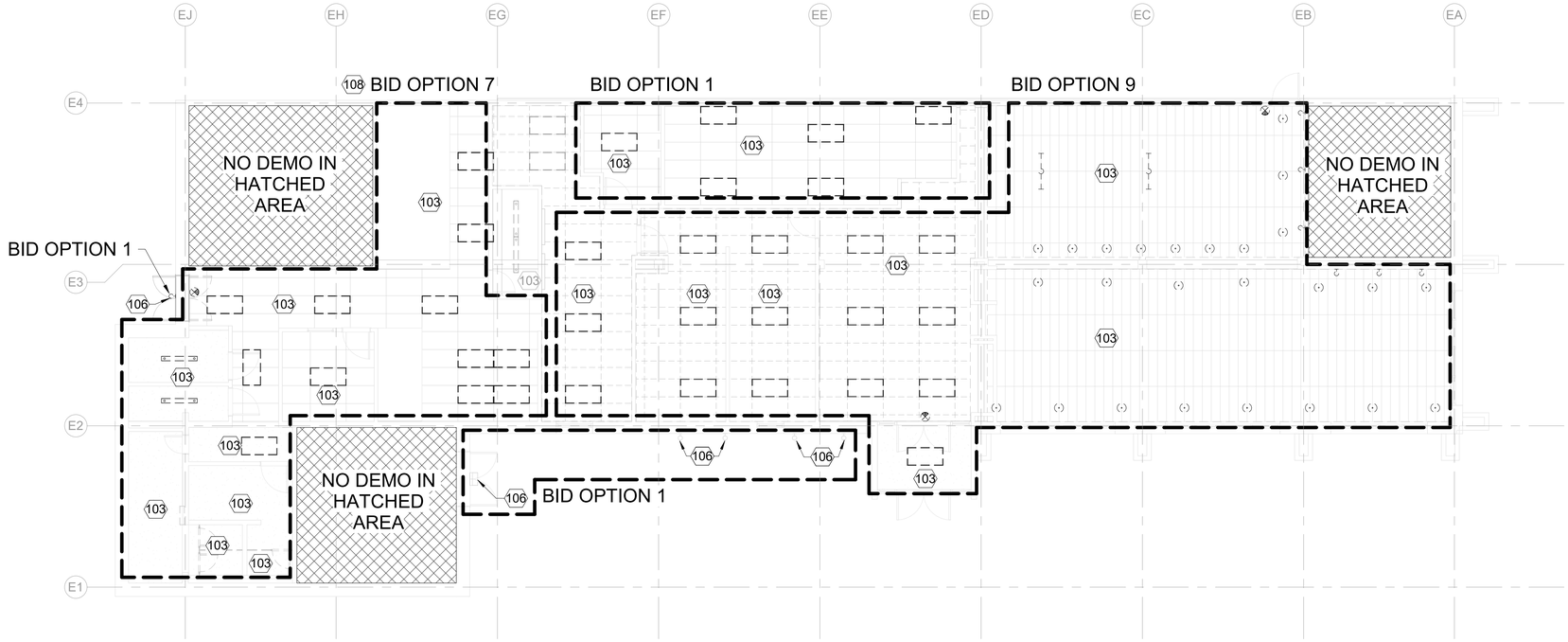

D1 LIGHTING DEMOLITION PLAN - BID OPTIONS
1/8" = 1'-0"

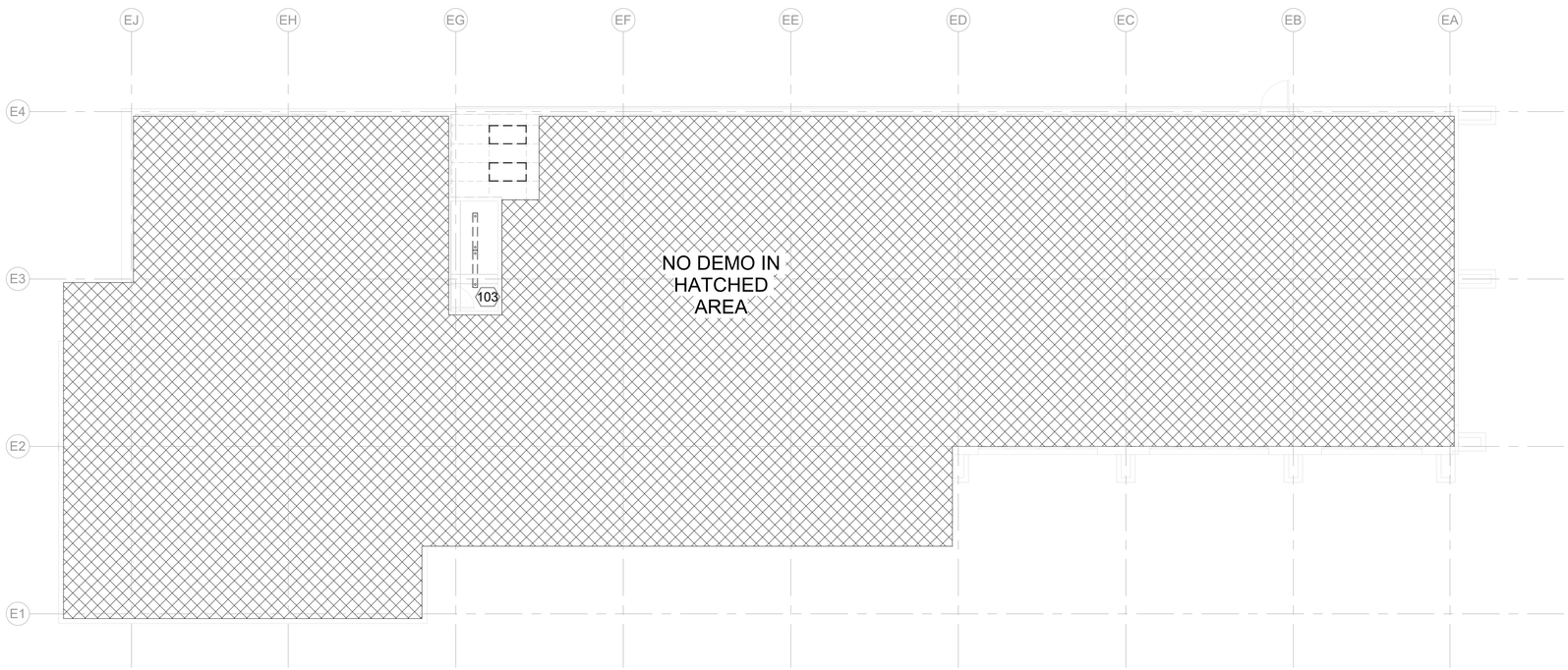

A1 LIGHTING DEMOLITION PLAN - BASE BID
1/8" = 1'-0"

GENERAL NOTES - DEMO LIGHTING

A	EXISTING ELECTRICAL WORK NOT ASSOCIATED WITH NEW CONSTRUCTION IS TO REMAIN IN SERVICE. EXTEND CONDUIT AND RUN NEW WIRE AS REQUIRED WHERE DEMOLITION WORK AFFECTS ELECTRICAL SERVICE TO DOWNSTREAM DEVICES THAT ARE TO REMAIN. NOTIFY OWNER 7 DAYS MINIMUM PRIOR TO ANY POWER DISRUPTION.
B	CAREFULLY COORDINATE DEMOLITION WITH NEW CONSTRUCTION (PARTITION AND REFLECTED CEILING) ARCHITECTURAL AND MECHANICAL PLANS.
C	REMOVE EXISTING LIGHTING FIXTURES, CONTROLS, AND CIRCUITS IN AREA OF WORK BACK TO SOURCE UNLESS OTHERWISE NOTED.
D	EXTERIOR LIGHTS ARE EXISTING TO REMAIN UNLESS OTHERWISE NOTED.
E	COORDINATE REMOVAL OF CEILING AND SUPPORT EXISTING FIXTURES TO REMAIN FROM STRUCTURE
F	LIGHT FIXTURES SHOWN TO DEMOLISHED ARE BASED ON RECORD DRAWINGS AND ARE SHOWN FOR REFERENCE ONLY. FIELD VERIFY FOR EXACT FIXTURE QUANTITY AND LOCATIONS.

KEYNOTES

103	COMPLETE LIGHTING RENOVATION IN AREA SHOWN. REMOVE LIGHT FIXTURES, CIRCUITS, AND CONTROLS IN THIS AREA UNLESS OTHERWISE NOTED.
106	PROTECT EXISTING EXTERIOR WALL MOUNTED FIXTURE FOR REUSE TO CLEAN AND RELAMP. TEST FIXTURE FOR PROPER OPERATION PRIOR TO BEGINNING DEMOLITION. (BID OPTION 1)
108	MAINTAIN EXISTING LIGHTING AND SUPPORT FROM STRUCTURE IF BID OPTION 8 IS NOT ACCEPTED.

KEY PLAN

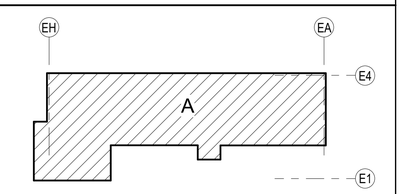

GRAPHIC SCALE

8 0 8 16
Scale: 1/8 INCH = 1 FOOT

PROJECT NORTH

PLAN NORTH

STATE OF TEXAS
AARON McWHORTER
100310
LICENSED PROFESSIONAL ENGINEER
6.24.2021

US Army Corps of Engineers ®

MARK	DESCRIPTION	DATE

DESIGNED BY: A. MCWHORTER
DRAWN BY: S. WALCHER
CHECKED BY: V. MONTELLANO
SUBMITTED BY: E. OLMESS
SIZE: ANSI D
ISSUE DATE: JUNE 2022
CONTRACT NO.: W912PP-22-R-0021
FILENAME: K408-923-ED110

US ARMY CORPS OF ENGINEERS
ALBUQUERQUE
ALBUQUERQUE, NEW MEXICO

JACOBS
JACOBS ENGINEERING GROUP INC.
777 Main Street
Fort Worth, TX 76102

COMBAT RESCUE HELICOPTER SIMULATOR FACILITY
KIRTLAND AIR FORCE BASE (AFB)
BERNALILLO COUNTY, NEW MEXICO

PARTIAL RENOVATION BUILDING 923
LIGHTING DEMOLITION PLAN

SHEET ID
923
ED110

READY TO ADVERTISE

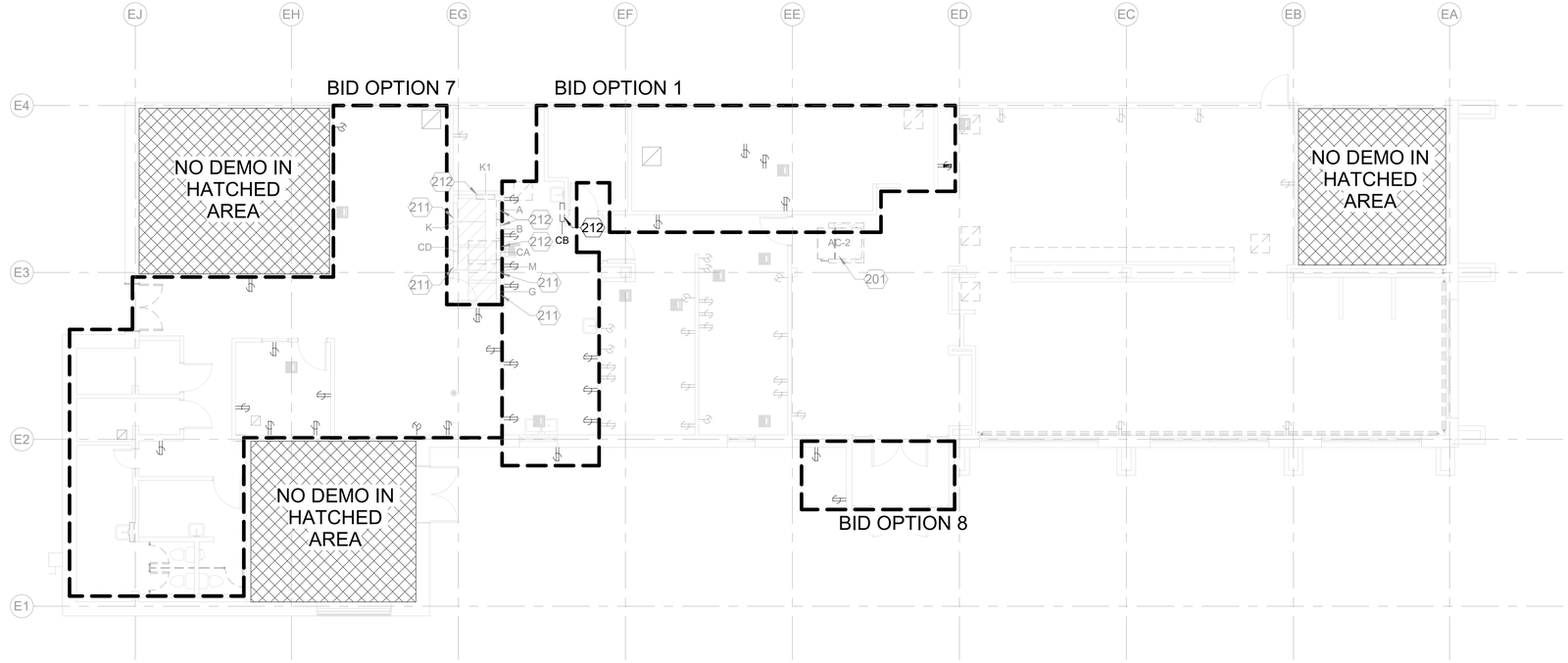

D1 POWER DEMOLITION PLAN - BID OPTIONS

1/8" = 1'-0"

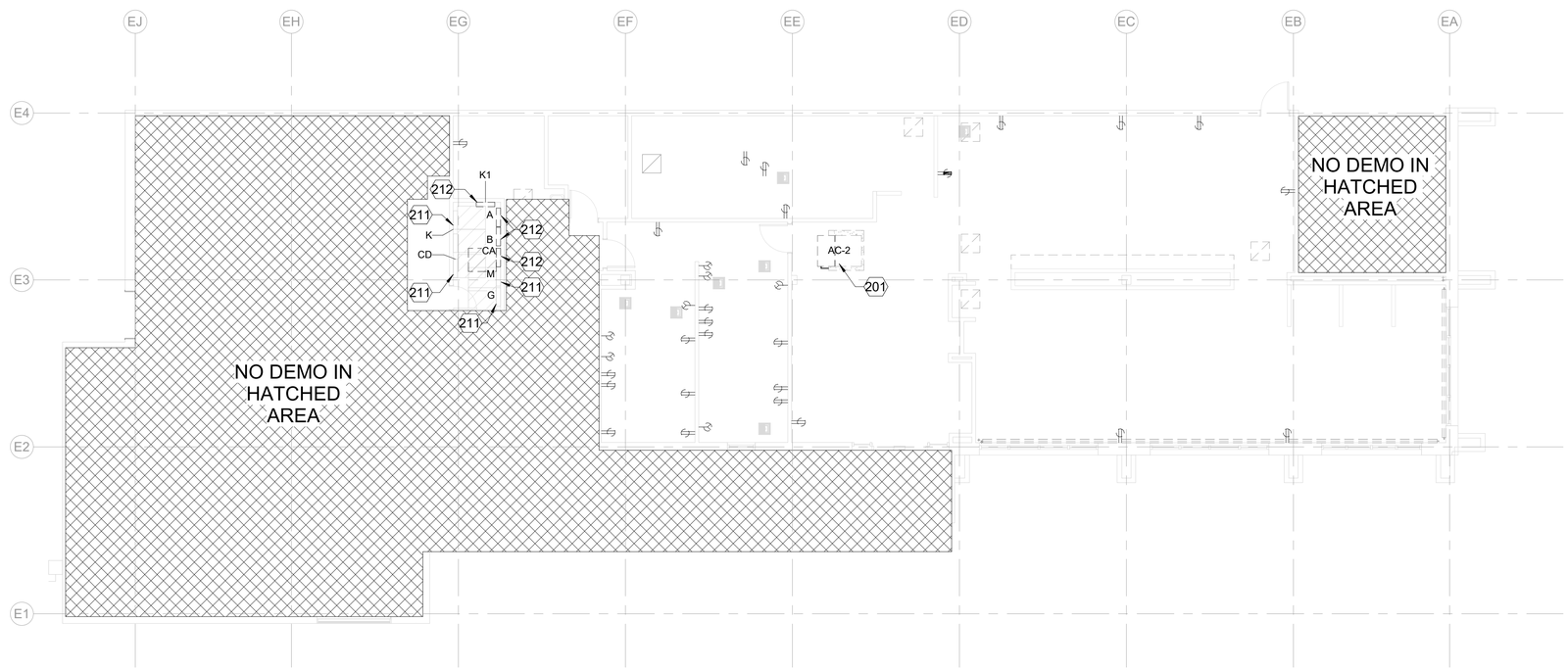

A1 POWER DEMOLITION PLAN - BASE BID

1/8" = 1'-0"

GENERAL NOTES - DEMO POWER

A	EXISTING ELECTRICAL WORK NOT ASSOCIATED WITH NEW CONSTRUCTION IS TO REMAIN IN SERVICE. EXTEND CONDUIT AND RUN NEW WIRE AS REQUIRED WHERE DEMOLITION WORK AFFECTS ELECTRICAL SERVICE TO DOWNSTREAM DEVICES THAT ARE TO REMAIN. NOTIFY OWNER 7 DAYS MINIMUM PRIOR TO ANY POWER DISRUPTION.
B	SELECT DEMOLITION MAY BE REQUIRED FOR NEW CONSTRUCTION AND MAY NOT BE DELINEATED ON THIS DRAWING. CAREFULLY COORDINATE DEMOLITION WITH NEW CONSTRUCTION (PARTITION AND REFLECTED CEILING) PLANS TO VERIFY ACTUAL EXTENT OF DEMOLITION.
C	REMOVE EXISTING ELECTRICAL RECEPTACLES, DEVICES, AND CIRCUITS BACK TO SOURCE, LABEL CIRCUIT BREAKER OF ABANDONDED CIRCUITS AS SPARE IN PANEL WHERE ALL LOADS HAVE BEEN REMOVED. PROVIDE NEW TYPED DIRECTORIES FOR PANELS AFFECTED BY THIS ALTERATION.
D	THE BUILDING AREA NOT SHOWN IS TO REMAIN OPERATIONAL INCLUDING COMM ROOM CITS AND SERVER ROOM. PROVIDE DOCUMENTATION WITH CONTRACTING OFFICER APPROVAL FOR SCHEDULED ELECTRICAL OUTAGE INDICATING DATES AND LENGTH OF TIME TO COMM ROOM CITS AND SERVER ROOM AREAS NOT IN SCOPE OF WORK.
E	DEVICES SHOWN TO BE DEMOLISHED ARE BASED ON RECORD DRAWINGS AND ARE SHOWN FOR REFERENCE ONLY. FIELD VERIFY FOR EXACT DEVICE QUANTITY AND LOCATIONS.

KEYNOTES

201	COORDINATE DEMOLITION WITH MECHANICAL. REMOVE DEVICES, CONDUIT, AND CONDUCTORS ASSOCIATED WITH UNIT AC-2. LABEL CIRCUIT BREAKER AS SPARE.
211	EXISTING PANEL TO REMAIN.
212	REMOVE EXISTING PANEL AND FEEDER BACK TO MAIN SWITCHBOARD.

KEY PLAN

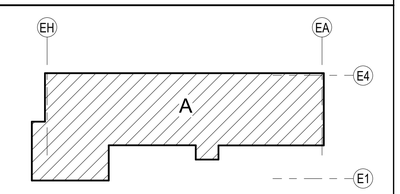

GRAPHIC SCALE

8 0 8 16

Scale: 1/8 INCH = 1 FOOT

PROJECT NORTH

PLAN NORTH

STATE OF TEXAS
AARON McWHORTER
100310
LICENSED
PROFESSIONAL ENGINEER
6.24.2021

US Army Corps of Engineers ®

MARK	DESCRIPTION	DATE

DESIGNED BY: A. MCWHORTER
DRAWN BY: S. WALCHER
CHECKED BY: V. MONTELLANO
SUBMITTED BY: E. OLMESS
SIZE: ANSI D
ISSUE DATE: JUNE 2022
CONTRACT NO.: W912PP-22-R-0021
FILENAME: K486-923-ED111

US ARMY CORPS OF ENGINEERS
ALBUQUERQUE
ALBUQUERQUE, NEW MEXICO

JACOBS
JACOBS ENGINEERING GROUP INC.
777 Main Street
Fort Worth, TX 76102

COMBAT RESCUE HELICOPTER SIMULATOR FACILITY
KIRTLAND AIR FORCE BASE (AFB)
BERNALILLO COUNTY, NEW MEXICO

PARTIAL RENOVATION BUILDING 923
POWER DEMOLITION PLAN

SHEET ID
923
ED111

READY TO ADVERTISE

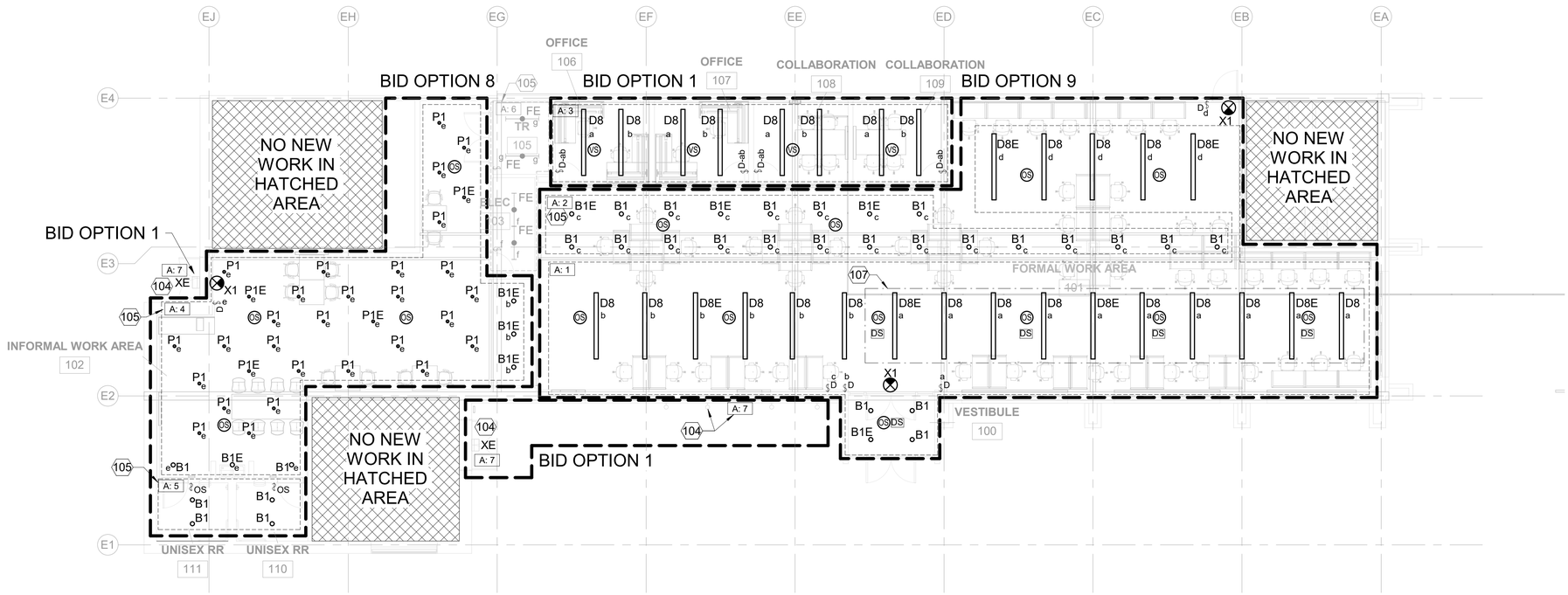

D1 LIGHTING PLAN - BID OPTIONS

1/8" = 1'-0"

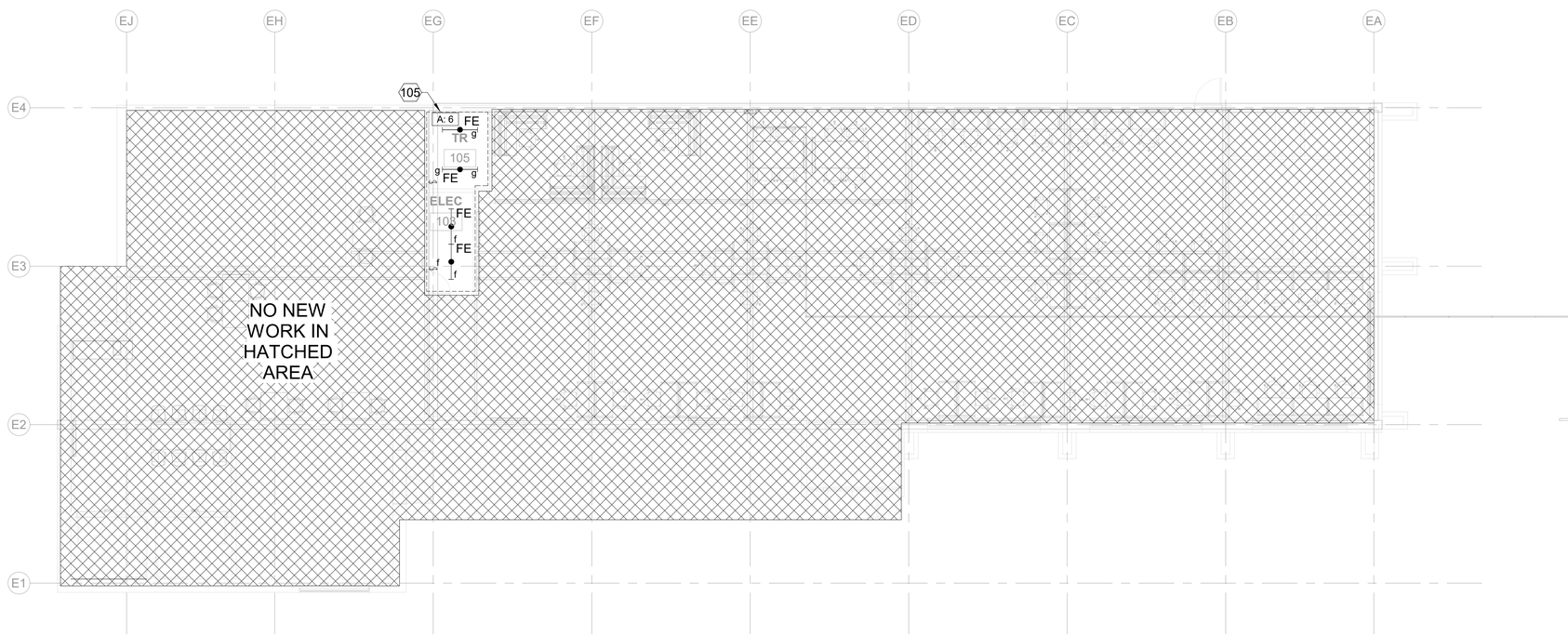

A1 LIGHTING PLAN - BASE BID

1/8" = 1'-0"

GENERAL NOTES - LIGHTING

A	OCCUPANCY SENSOR LOCATIONS ARE SHOWN FOR GENERAL REFERENCE ONLY. REFER TO MANUFACTURER'S RECOMMENDATIONS FOR EXACT PLACEMENT AND QUANTITY FOR PROPER OPERATION.
B	PROVIDE ROOM CONTROLLERS ADJACENT TO OCCUPANCY SENSORS TO CONTROL SWITCHED RECEPTACLES THROUGH OCCUPANCY SENSOR.
C	PROVIDE CIRCUIT FOR EXISTING AND NEW EXTERIOR BUILDING MOUNTED LIGHTING CONTROLLED THROUGH PHOTOCELL LOCATED ON ROOF FACING NORTH.
D	SUSPEND TYPE P1 PENDANT LIGHTING FIXTURES 6 INCHES BELOW CEILING WITH 6 INCH CABLE LENGTH.
E	COORDINATE REMOVAL OF CEILING AND SUPPORT EXISTING FIXTURES TO REMAIN FROM STRUCTURE

KEYNOTES

104	INTERCEPT EXISTING CIRCUIT AND RECONNECT TO NEW CIRCUIT A:7 AS INDICATED. EXTERIOR LIGHT TO BE CONTROLLED THROUGH A NEW PHOTOCELL SENSOR MOUNTED ON ROOF FACING NORTH. (BID OPTION 1)
105	PROVIDE CIRCUIT INDICATED TO LIGHTING FIXTURES ENCLOSED WITHIN DASHED LINE.
107	THE LIGHTING FIXTURES ENCLOSED WITHIN THE DASHED-DOT LINE PROVIDE CONTROL BY OCCUPANCY SENSOR AND DAYLIGHT SENSOR WITH WALL CONTROL DIMMING.

KEY PLAN

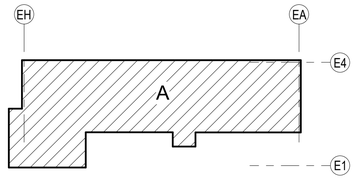

GRAPHIC SCALE

8 0 8 16

Scale: 1/8 INCH = 1 FOOT

PROJECT NORTH

PLAN NORTH

STATE OF TEXAS
AARON McWHORTER
100310
LICENSED
PROFESSIONAL ENGINEER
6.24.2021

US Army Corps of Engineers ®

MARK	DESCRIPTION	DATE

DESIGNED BY: A. MCWHORTER
DRAWN BY: S. WALCHER
CHECKED BY: V. MONTELLANO
SUBMITTED BY: E. OLMESS
SIZE: ANSI D
FILENAME: K486923-EL110
ISSUE DATE: JUNE 2022
CONTRACT NO.: W912PP-22-R-0021

US ARMY CORPS OF ENGINEERS
ALBUQUERQUE
ALBUQUERQUE, NEW MEXICO

JACOBS
JACOBS ENGINEERING GROUP INC.
777 Main Street
Fort Worth, TX 76102

COMBAT RESCUE HELICOPTER SIMULATOR FACILITY
KIRTLAND AIR FORCE BASE (AFB)
BERNALILLO COUNTY, NEW MEXICO

PARTIAL RENOVATION BUILDING 923
LIGHTING PLAN

SHEET ID
923
EL110

READY TO ADVERTISE

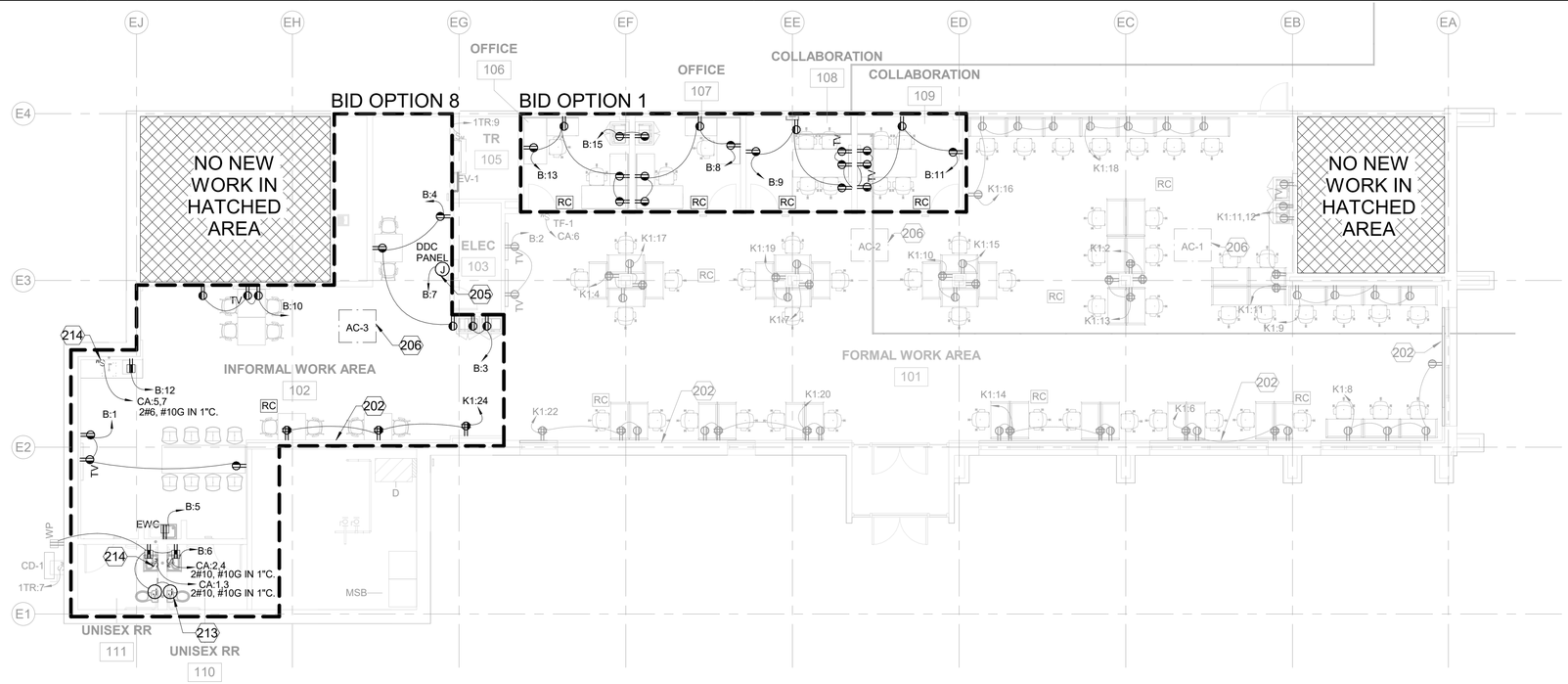

D1 POWER PLAN - BID OPTIONS

1/8" = 1'-0"

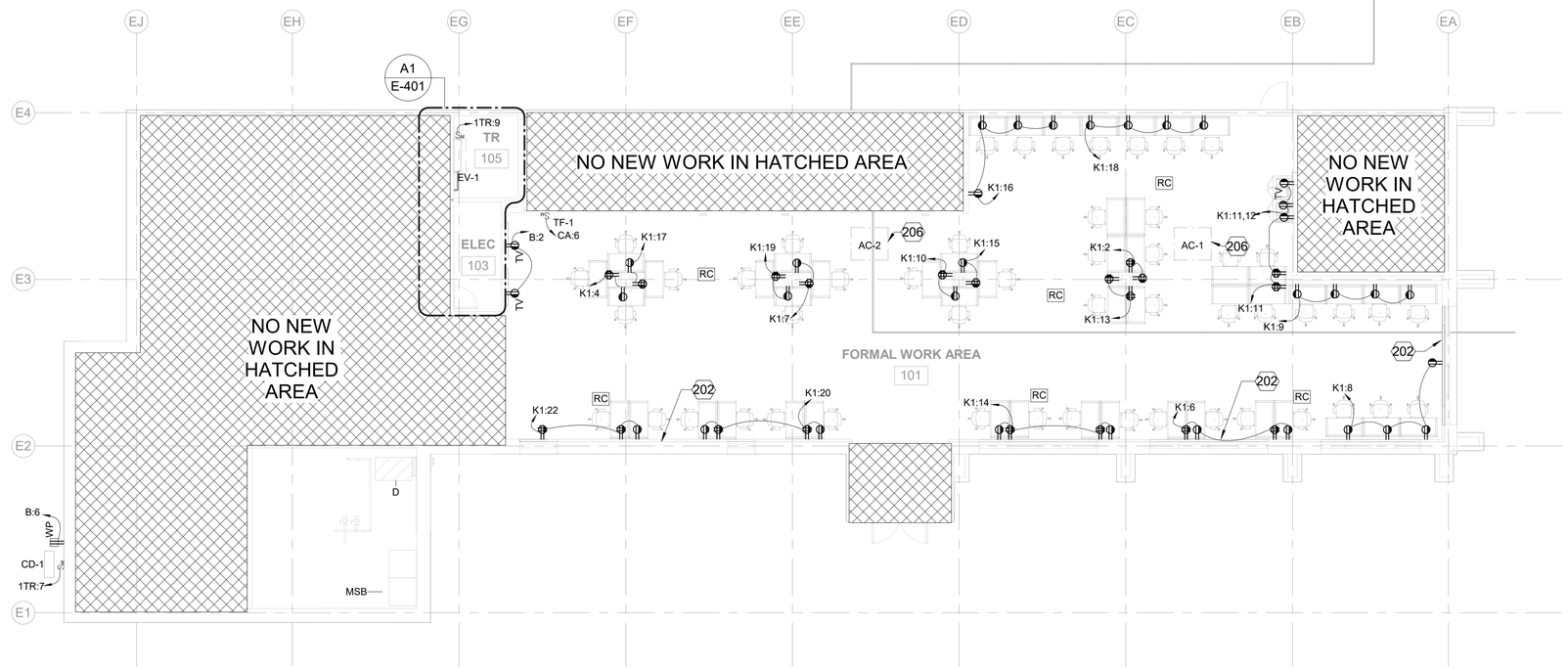

A1 POWER PLAN - BASE BID

1/8" = 1'-0"

GENERAL NOTES - POWER

A	PROVIDE CONTROL OF SWITCHED RECEPTACLES THROUGH OCCUPANCY SENSORS ON LIGHTING PLAN AND ROOM CONTROLLER. COORDINATE WITH LIGHTING PLANS. PROVIDE SWITCHED AND UNSWITCHED PHASE CONDUCTOR TO EACH RECEPTACLE BACKBOX 3#12, 1#12 GROUND IN 3/4" CONDUIT.

KEYNOTES

202	COORDINATE RECEPTACLE MOUNTING HEIGHT ALONG WALL WITH TELECOMMUNICATIONS SURFACE RACEWAY AND WINDOWS.
205	PROVIDE CIRCUIT FOR MECHANICAL DDC PANEL RELOCATION. COORDINATE LOCATION AND REQUIREMENTS WITH MECHANICAL PLANS. FIELD VERIFY EXISTING CONDITIONS.
206	COORDINATE ELECTRICAL REQUIREMENTS WITH EXISTING MECHANICAL HVAC UNITS DUCTWORK RECONNECTION.
213	PROVIDE 120V POWER CIRCUIT FOR AUTOMATIC FLUSH SENSORS.
214	PROVIDE 208V POWER CIRCUIT FOR SINK HEATERS.

KEY PLAN

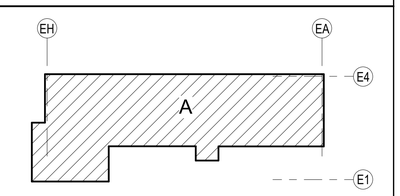

GRAPHIC SCALE

8 0 8 16

Scale: 1/8 INCH = 1 FOOT

PROJECT NORTH

PLAN NORTH

STATE OF TEXAS
AARON McWHORTER
100310
LICENSED PROFESSIONAL ENGINEER
6.24.2021

US Army Corps of Engineers ®

MARK	DESCRIPTION	DATE

DESIGNED BY: A. MCWHORTER
DRAWN BY: S. WALCHER
CHECKED BY: V. MONTELLANO
SUBMITTED BY: E. OLMESS
SIZE: ANSI D
ISSUE DATE: JUNE 2022
CONTRACT NO.: W912PP-22-R-0021
FILENAME: K486923-EP110

US ARMY CORPS OF ENGINEERS
ALBUQUERQUE
ALBUQUERQUE, NEW MEXICO

JACOBS
JACOBS ENGINEERING GROUP INC.
777 Main Street
Fort Worth, TX 76102

COMBAT RESCUE HELICOPTER SIMULATOR FACILITY
KIRTLAND AIR FORCE BASE (AFB),
BERNALILLO COUNTY, NEW MEXICO

PARTIAL RENOVATION BUILDING 923
POWER PLAN

SHEET ID
923
EP110

READY TO ADVERTISE

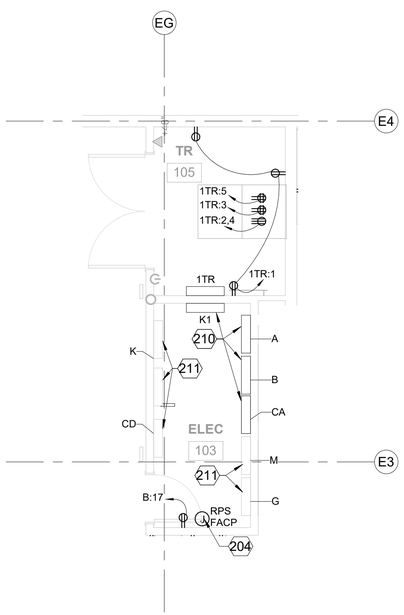

A1 ENLARGED POWER PLAN - TR & ELEC
1/4" = 1'-0"

KEYNOTES

204	POWER FOR FACP/RPS. RUN CIRCUIT TO THE EXISTING SIGN CIRCUIT IN MAIN SWITCHBOARD AND RELABEL CIRCUIT ON MSB. COORDINATE LOCATION OF FACP WITH FIRE PROTECTION DRAWINGS. FIELD VERIFY EXISTING CONDITIONS.
210	PROVIDE NEW PANEL TO REPLACE EXISTING PANEL. RUN NEW FEEDER TO THE MAIN SWITCHBOARD.
211	EXISTING PANEL TO REMAIN.

KEY PLAN

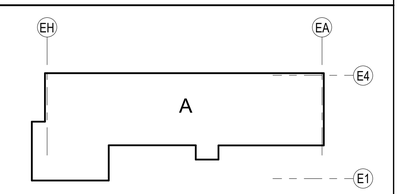

GRAPHIC SCALE

4 0 4 8
Scale: 1/4 INCH = 1 FOOT

PROJECT NORTH

PLAN NORTH

STATE OF TEXAS
AARON McWHORTER
100310
LICENSED
PROFESSIONAL ENGINEER
4.24.2021

US Army Corps of Engineers ®

MARK	DESCRIPTION	DATE

DESIGNED BY: Designer
DRAWN BY: Author
CHECKED BY: Checker
SUBMITTED BY:
SIZE: ANSI D
FILENAME:
ISSUE DATE: JUNE 2022
CONTRACT NO. : W912PP-22-R-0021

US ARMY CORPS OF ENGINEERS
ALBUQUERQUE
ALBUQUERQUE, NEW MEXICO

JACOBS
JACOBS ENGINEERING GROUP INC.
777 Main Street
Fort Worth, TX 76102

COMBAT RESCUE HELICOPTER SIMULATOR FACILITY
KIRTLAND AIR FORCE BASE (AFB)
BERNALILLO COUNTY, NEW MEXICO

PARTIAL RENOVATION BUILDING 923
ENLARGED PLAN

SHEET ID
923
E-401

READY TO ADVERTISE

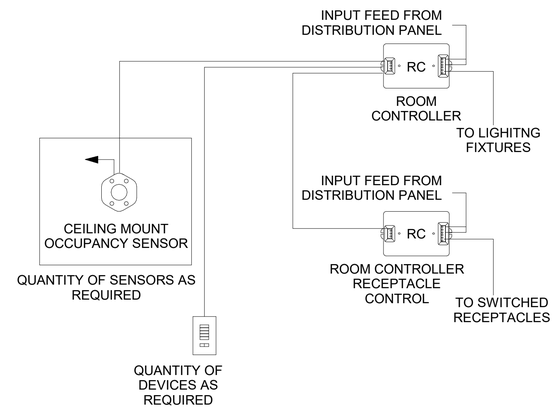

GENERAL NOTES:

1. PROVIDE COMPLETE LIGHTING CONTROL WIRING DIAGRAM, CUTSHEETS, QUANTITY OF DEVICES, DEVICE LOCATIONS, AND SEQUENCE OF OPERATIONS.

E1 ROOM CONTROLLER
E-501 NTS

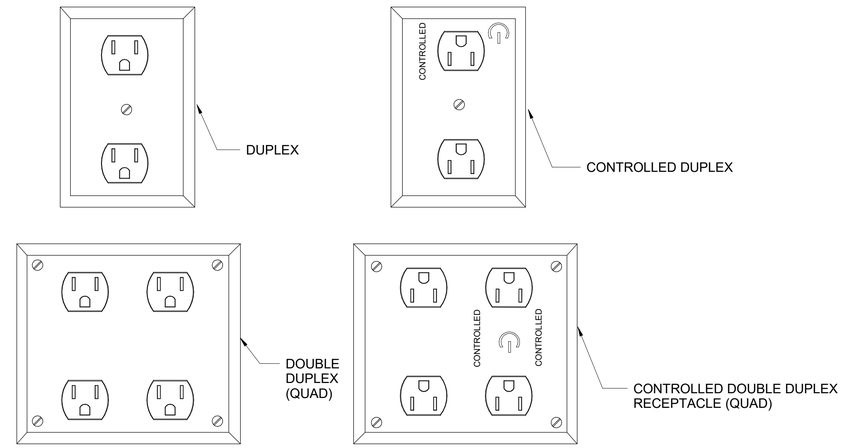

NOTES:
1. PROVIDE SWITCHED AND UNSWITCHED CONDUCTORS TO RECEPTACLE BACK BOX FOR CONNECTION TO THE SWITCHED AND UNSWITCHED RECEPTACLE.

E5 RECEPTACLE DETAIL CONTROLLED BY ROOM CONTROLLER
E-501 NOT TO SCALE

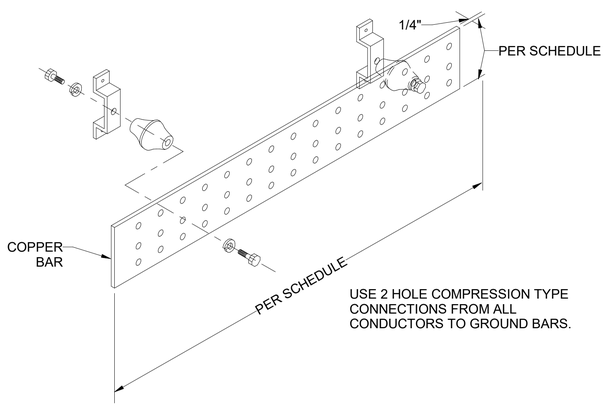

A1 GROUND BAR INSTALLATION
E-501 NTS

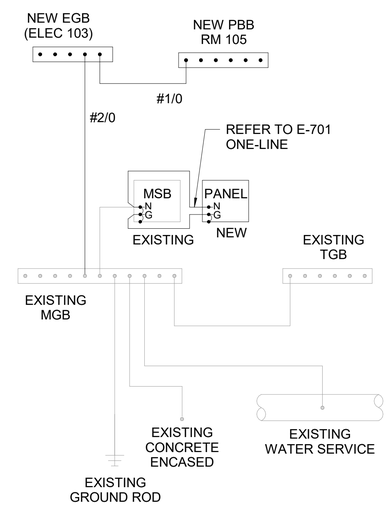

A5 GROUNDING - RISER DIAGRAM
E-501 NTS

STATE OF TEXAS
AARON McWHORTER
100310
LICENSED
PROFESSIONAL ENGINEER
6.24.2021

READY TO ADVERTISE

US Army Corps of Engineers ®

MARK	DESCRIPTION	DATE

DESIGNED BY: A. MCWHORTER
DRAWN BY: S. WALCHER
CHECKED BY: V. MONTELLANO
SUBMITTED BY: E. OLMESS
SIZE: ANSI D
ISSUE DATE: JUNE 2022
CONTRACT NO. : W912PP-22-R-0021
FILENAME: K486923-E-501

US ARMY CORPS OF ENGINEERS
ALBUQUERQUE
ALBUQUERQUE, NEW MEXICO

JACOBS
JACOBS ENGINEERING GROUP INC.
777 Main Street
Fort Worth, TX 76102

COMBAT RESCUE HELICOPTER SIMULATOR FACILITY
KIRTLAND AIR FORCE BASE (AFB),
BERNALILLO COUNTY, NEW MEXICO

PARTIAL RENOVATION BUILDING 923
DETAILS

SHEET ID
923
E-501

LUMINAIRE SCHEDULE

TYPE MARK	DESCRIPTION	VOLTAGE	COLOR TEMPERATURE	CRI	LAMP	LUMINAIRE WATTS	DELIVERED LUMENS	MOUNTING TYPE	REMARKS
B1	ROUND DOWNLIGHT 4.5IN APERTURE, CLEAR DIFFUSE, 0-10V DIMMING DRIVER TO 10%	120V	3500K	80	LED	11W	1500	RECESSED	BASIS OF DESIGN: FOCAL POINT-RO-1500L-120-LD1-T-BH-LC4-RO-40K-FL2-CD-WP
B1E	SAME AS TYPE B1 WITH INTEGRAL BATTERY BACKUP	120V	3500K	80	LED	11W	1500	RECESSED	SAME AS TYPE B1 WITH BATTERY BACKUP
D8	8FT RECESSES SLOT	120V	3500K	80	LED	24W	5000	RECESSED	BASIS OF DESIGN: FOCAL POINT-SEEM-FSM4LP-625LF-35K-1C-UNV-LD1-8
D8E	SAME AS TYPE D8E WITH INTEGRAL BATTERY BACKUP	120V	3500K	80	LED	24W	5000	RECESSED	SAME AS TYPE D8 WITH BATTERY BACKUP
FE	4FT INDUSTRIAL STRIP WITH EMERGENCY BATTERY BACKUP	120V	4000K	80	LED	40W	4500	BOTTOM OF FIXTURE SUSPENDED 8'-0" AFF	BASIS OF DESIGN: COLUMBIA-CSL-4-4040
P1	4IN DIAMETER, 15IN HIGHT CYLINDER PENDANT, WHITE SUSPENSION CORD WITH AIRCRAFT CABLE 6 IN LENGTH (6 INCH SUSPENSION), 41 DEGREE BEAM, WHITE FINISH.	120V	3500K	80	LED	11W	1300	SUSPENDED	BASIS OF DESIGN: V2 LIGHTING-C4LP-N-V-D-13-83-35-41-T1-WH-RS12
X1	BRUSHED ALUMINUM EXIT SIGN, RED LED, SINGLE FACE, UNIVERSAL MOUNT, INTEGRAL BATTERY BACKUP, SELF DIAGNOSTIC	120V	-		LED	7W		UNIVERSAL	CEILING, WALL, OR END MOUNT. REFER TO PLANS FOR MOUNTING TYPE.

NOTES: 1. SELECT PRODUCTS THAT MEET ALL LUMINAIRE PERFORMANCE CRITERIA AND, AT A MINIMUM, HAVE AN EFFICACY (LUMENS PER WATT) NO LESS THAN THE BASIS OF DESIGN.

2. PROVIDE 10-YEAR FULL WARRANTY ON LUMINAIRES INCLUDING DRIVERS AND LED'S.

STATE OF TEXAS
AARON McWHORTER
100310
LICENSED PROFESSIONAL ENGINEER
6.24.2021

US Army Corps of Engineers ®

MARK	DESCRIPTION	DATE

DESIGNED BY: A. MCWHORTER
DRAWN BY: S. WALCHER
CHECKED BY: V. MONTELLANO
SUBMITTED BY: E. OLMESS
SIZE: ANSI D
FILENAME: K4089-923-E-601
ISSUE DATE: JUNE 2022
CONTRACT NO. : W912PP-22-R-0021

US ARMY CORPS OF ENGINEERS
ALBUQUERQUE
ALBUQUERQUE, NEW MEXICO

JACOBS
JACOBS ENGINEERING GROUP INC.
777 Main Street
Fort Worth, TX 76102

COMBAT RESCUE HELICOPTER SIMULATOR FACILITY
KIRTLAND AIR FORCE BASE (AFB)
BERNALILLO COUNTY, NEW MEXICO

PARTIAL RENOVATION BUILDING 923
LUMINAIRE SCHEDULE

SHEET ID
923
E-601

READY TO ADVERTISE

A

Location: Space 8
Supply From:
Mounting: Surface
Accessories:
Volts: 120/208 Wye
Phases: 3
Wires: 4
Mains Type: MCB
Bus Rating: 100 A
MCB Rating 100 A
A.I.C. Rating: 22K
Available Fault Current: 9K

CKT	Circuit Description	Trip	Poles	A		B		C		Poles	Trip	Circuit Description	CKT
1	LTG - 101, VEST	20 A	1	555 VA	284 VA					1	20 A	LTG - 101 CAN LIGHTS	2
3	LTG - 106-109	20 A	1			193 VA	442 VA			1	20 A	LTG - 102, WEST EXIT	4
5	LTG - RR 110, RR 111	20 A	1					80 VA	160 VA	1	20 A	LTG - ELEC 103, TR 105	6
7	LTG - EXTERIOR NEW AND EXISTING	20 A	1	169 VA	0 VA					--	--	SPACE	8
9	SPACE	--	--			0 VA	0 VA			--	--	SPACE	10
11	SPACE	--	--					0 VA	0 VA	--	--	SPACE	12
13	SPACE	--	--	0 VA	0 VA					--	--	SPACE	14
15	SPACE	--	--			0 VA	0 VA			--	--	SPACE	16
17	SPACE	--	--					0 VA	0 VA	--	--	SPACE	18
19	SPACE	--	--	0 VA	0 VA					--	--	SPACE	20
21	SPACE	--	--			0 VA	0 VA			--	--	SPACE	22
23	SPACE	--	--					0 VA	0 VA	--	--	SPACE	24
25	SPACE	--	--	0 VA	0 VA					--	--	SPACE	26
27	SPACE	--	--			0 VA	0 VA			--	--	SPACE	28
29	SPACE	--	--					0 VA	0 VA	--	--	SPACE	30
31	SPACE	--	--	0 VA	0 VA					--	--	SPACE	32
33	SPACE	--	--			0 VA	0 VA			--	--	SPACE	34
35	SPACE	--	--					0 VA	0 VA	--	--	SPACE	36
37	SPARE	20 A	1	0 VA	0 VA					1	20 A	SPARE	38
39	SPARE	20 A	1			0 VA	0 VA			1	20 A	SPARE	40
41	SPARE	20 A	1					0 VA	0 VA	1	20 A	SPARE	42
			Total Load:	1006 VA		634 VA		237 VA					

Load Classification	Connected Load	Design Factor	Estimated Demand	Panel Totals	
LTG	1873 VA	100.00%	1873 VA		
				Total Conn. Load:	1873 VA
				Total Est. Demand:	1873 VA
				Total Conn. Current:	5 A
				Total Est. Demand Current:	5 A
				Non-Coincident...	0 A
				Total Demand Current:	5 A

Notes:
1. TOTAL DEMAND CURRENT INCORPORATES ONLY THE NON-COINCIDENT PEAK LOAD BETWEEN HEATING AND COOLING.

B

Location: Space 8
Supply From:
Mounting: Surface
Accessories:
Volts: 120/208 Wye
Phases: 3
Wires: 4
Mains Type: MCB
Bus Rating: 225 A
MCB Rating 125 A
A.I.C. Rating: 22K
Available Fault Current: 12K

CKT	Circuit Description	Trip	Poles	A		B		C		Poles	Trip	Circuit Description	CKT
1	RECEPTACLES - 102 WALL	20 A	1	540 VA	360 VA					1	20 A	RECEPTACLES - 101 WALL TVs	2
3	RECEPTACLES - 101 WALL COPIERS	20 A	1			360 VA	720 VA			1	20 A	RECEPTACLES - 102 WALL	4
5	RECEPTACLES - 101 WALL EWCs	20 A	1					180 VA	1540 VA	1	20 A	RECEPTACLES - 110 WALL	6
7	DDC HVAC	20 A	1	500 VA	1080 VA					1	20 A	RECEPTACLES - 107 WALL	8
9	RECEPTACLES - 108 WALL	20 A	1			1080 VA	720 VA			1	20 A	RECEPTACLES - 102 WALL	10
11	RECEPTACLES - 109 WALL	20 A	1					1080 VA	180 VA	1	20 A	RECEPTACLES - 102 COFFEE MAKER	12
13	RECEPTACLES - 106 WALL	20 A	1	1080 VA	0 VA					--	--	SPACE	14
15	RECEPTACLES - 106 WALL COPIER	20 A	1			360 VA	0 VA			--	--	SPACE	16
17	RECEPTACLE - 103 WALL	20 A	1					180 VA	0 VA	--	--	SPACE	18
19	SPACE	--	--	0 VA	0 VA					--	--	SPACE	20
21	SPACE	--	--			0 VA	0 VA			--	--	SPACE	22
23	SPACE	--	--					0 VA	0 VA	--	--	SPACE	24
25	SPACE	--	--	0 VA	0 VA					--	--	SPACE	26
27	SPACE	--	--			0 VA	0 VA			--	--	SPACE	28
29	SPACE	--	--					0 VA	0 VA	--	--	SPACE	30
31	SPACE	--	--	0 VA	0 VA					--	--	SPACE	32
33	SPACE	--	--			0 VA	0 VA			--	--	SPACE	34
35	SPARE	20 A	1					0 VA	0 VA	1	20 A	SPARE	36
37	SPARE	20 A	1	0 VA	0 VA					3	60 A	SPD	38
39	SPARE	20 A	1			0 VA	0 VA			--	--	--	40
41	SPARE	20 A	1					0 VA	0 VA	--	--	--	42
			Total Load:	3560 VA		3240 VA		3160 VA					

Load Classification	Connected Load	Design Factor	Estimated Demand	Panel Totals	
Other	1500 VA	100.00%	1500 VA		
RECEPTACLES	8460 VA	100.00%	8460 VA	**Total Conn. Load:**	9960 VA
				Total Est. Demand:	9960 VA
				Total Conn. Current:	28 A
				Total Est. Demand Current:	28 A
				Non-Coincident...	0 A
				Total Demand Current:	28 A

Notes:
1. TOTAL DEMAND CURRENT INCORPORATES ONLY THE NON-COINCIDENT PEAK LOAD BETWEEN HEATING AND COOLING.

K1

Location: Space 8
Supply From:
Mounting: Surface
Accessories:
Volts: 120/208 Wye
Phases: 3
Wires: 4
Mains Type: MCB
Bus Rating: 225 A
MCB Rating 225 A
A.I.C. Rating: 22K
Available Fault Current: 16K

CKT	Circuit Description	Trip	Poles	A		B		C		Poles	Trip	Circuit Description	CKT
1	1TR	100 A	3	2540 VA	720 VA					1	20 A	RECEPTACLES RM 101 COLUMN	2
3	--	--	--			1060 VA	720 VA			1	20 A	RECEPTACLES RM 101 COLUMN	4
5	--	--	--					360 VA	1080 VA	1	20 A	RECEPTACLES - 101 WALL	6
7	RECEPTACLES - 101 COLUMN	20 A	1	720 VA	1260 VA					1	20 A	RECEPTACLES - 101 WALL	8
9	RECEPTACLES - 101 WALL	20 A	1			1440 VA	720 VA			1	20 A	RECEPTACLES - 101 COLUMN	10
11	RECEPTACLES - 101 WALL	20 A	1					900 VA	360 VA	1	20 A	RECEPTACLES - 101 COPIERS	12
13	RECEPTACLES - 101 COLUMN	20 A	1	720 VA	1440 VA					1	20 A	RECEPTACLES - 101 WALL	14
15	RECEPTACLES - 101 COLUMN	20 A	1			720 VA	1260 VA			1	20 A	RECEPTACLES - 101 WALL	16
17	RECEPTACLES - 101 COLUMN	20 A	1					720 VA	1440 VA	1	20 A	RECEPTACLES - 101 WALL	18
19	RECEPTACLES - 101 COLUMN	20 A	1	720 VA	1260 VA					1	20 A	RECEPTACLES - 101 WALL	20
21	SPACE	--	--			0 VA	1080 VA			1	20 A	RECEPTACLES - 101 WALL	22
23	SPACE	--	--					0 VA	1080 VA	1	20 A	RECEPTACLES - 101 WALL	24
25	SPACE	--	--	0 VA	0 VA					--	--	SPACE	26
27	SPACE	--	--			0 VA	0 VA			--	--	SPACE	28
29	SPACE	--	--					0 VA	0 VA	--	--	SPACE	30
31	SPACE	--	--	0 VA	0 VA					--	--	SPACE	32
33	SPACE	--	--			0 VA	0 VA			--	--	SPACE	34
35	SPARE	20 A	1					0 VA	0 VA	1	20 A	SPARE	36
37	SPARE	20 A	1	0 VA	0 VA					3	30 A	SPD	38
39	SPARE	20 A	1			0 VA	0 VA			--	--	--	40
41	SPARE	20 A	1					0 VA	0 VA	--	--	--	42
			Total Load:	9380 VA		7000 VA		5940 VA					

Load Classification	Connected Load	Design Factor	Estimated Demand	Panel Totals	
Motor	1700 VA	122.06%	2075 VA		
RECEPTACLES	20620 VA	74.25%	15310 VA	**Total Conn. Load:**	22320 VA
				Total Est. Demand:	17385 VA
				Total Conn. Current:	62 A
				Total Est. Demand Current:	48 A
				Non-Coincident...	0 A
				Total Demand Current:	48 A

Notes:
1. TOTAL DEMAND CURRENT INCORPORATES ONLY THE NON-COINCIDENT PEAK LOAD BETWEEN HEATING AND COOLING.

1TR

Location: Space 2
Supply From: K1
Mounting: Surface
Accessories:
Volts: 120/208 Wye
Phases: 3
Wires: 4
Mains Type: MCB
Bus Rating: 100 A
MCB Rating 100 A
A.I.C. Rating: 22K
Available Fault Current: 12K

CKT	Circuit Description	Trip	Poles	A		B		C		Poles	Trip	Circuit Description	CKT
1	RECEPTACLES - 105 WALL	20 A	1	540 VA	500 VA					2	20 A	RECEPTACLE - 105 RACK 208V	2
3	RECEPTACLE - 105 RACK 120V	20 A	1			360 VA	500 VA			--	--	--	4
5	RECEPTACLE - 105 RACK 120V	20 A	1					360 VA	0 VA	3	30 A	SPD	6
7	CD-1	20 A	1	1500 VA	0 VA					--	--	--	8
9	EV-1	20 A	1			200 VA	0 VA			--	--	--	10
11	SPACE	--	--					0 VA	0 VA	--	--	SPACE	12
13	SPACE	--	--	0 VA	0 VA					--	--	SPACE	14
15	SPACE	--	--			0 VA	0 VA			--	--	SPACE	16
17	SPACE	--	--					0 VA	0 VA	--	--	SPACE	18
19	SPACE	--	--	0 VA	0 VA					--	--	SPACE	20
21	SPACE	--	--			0 VA	0 VA			--	--	SPACE	22
23	SPACE	--	--					0 VA	0 VA	--	--	SPACE	24
25	SPACE	--	--	0 VA	0 VA					--	--	SPACE	26
27	SPACE	--	--			0 VA	0 VA			--	--	SPACE	28
29	SPACE	--	--					0 VA	0 VA	--	--	SPACE	30
31	SPACE	--	--	0 VA	0 VA					--	--	SPACE	32
33	SPACE	--	--			0 VA	0 VA			--	--	SPACE	34
35	SPACE	--	--					0 VA	0 VA	--	--	SPACE	36
37	SPARE	20 A	1	0 VA	0 VA					1	20 A	SPARE	38
39	SPARE	20 A	1			0 VA	0 VA			1	20 A	SPARE	40
41	SPARE	20 A	1					0 VA	0 VA	1	20 A	SPARE	42
			Total Load:	2540 VA		1060 VA		360 VA					

Load Classification	Connected Load	Design Factor	Estimated Demand	Panel Totals	
Motor	1700 VA	122.06%	2075 VA		
RECEPTACLES	2260 VA	100.00%	2260 VA	**Total Conn. Load:**	3960 VA
				Total Est. Demand:	4335 VA
				Total Conn. Current:	11 A
				Total Est. Demand Current:	12 A
				Non-Coincident...	0 A
				Total Demand Current:	12 A

Notes:
1. TOTAL DEMAND CURRENT INCORPORATES ONLY THE NON-COINCIDENT PEAK LOAD BETWEEN HEATING AND COOLING.

STATE OF TEXAS
AARON McWHORTER
100310
LICENSED PROFESSIONAL ENGINEER
6.24.2021

READY TO ADVERTISE

US Army Corps of Engineers ®

MARK	DESCRIPTION	DATE

ISSUE DATE: JUNE 2022
CONTRACT NO. : W912PP-22-R-0021
DESIGNED BY: A. MCWHORTER
DRAWN BY: S. WALCHER
CHECKED BY: V. MONTELLANO
SUBMITTED BY: E. OLMESS
SIZE: ANSI D
FILENAME: K486-923-E-602

US ARMY CORPS OF ENGINEERS
ALBUQUERQUE
ALBUQUERQUE, NEW MEXICO

JACOBS
JACOBS ENGINEERING GROUP INC.
777 Main Street
Fort Worth, TX 76102

COMBAT RESCUE HELICOPTER SIMULATOR FACILITY
KIRTLAND AIR FORCE BASE (AFB)
BERNALILLO COUNTY, NEW MEXICO

PARTIAL RENOVATION BUILDING 923
PANEL SCHEDULES

SHEET ID
923
E-602

CA

Location: Space 8
Supply From:
Mounting: Surface
Accessories:

Volts: 120/208 Wye
Phases: 3
Wires: 4

Mains Type: MCB
Bus Rating: 400 A
MCB Rating 400 A

A.I.C. Rating: 22K
Available Fault Current: 19K

CKT	Circuit Description	Trip	Poles	A		B		C		Poles	Trip	Circuit Description	CKT
1	SINK HEATERS EWH-1 - 110	20 A	2	1800 VA	1800 VA					2	20 A	SINK HEATERS EWH-1 - 110, 111	2
3	--	--	--			1800 VA	1800 VA			--	--	--	4
5	SINK HEATER EWH-2 - 102	50 A	2					4150 VA	500 VA	1	20 A	TF-1	6
7	--	--	--	4150 VA	0 VA					--	--	SPACE	8
9	SPACE	--	--			0 VA	0 VA			--	--	SPACE	10
11	SPACE	--	--					0 VA	0 VA	--	--	SPACE	12
13	SPACE	--	--	0 VA	0 VA					--	--	SPACE	14
15	SPACE	--	--			0 VA	0 VA			--	--	SPACE	16
17	SPACE	--	--					0 VA	0 VA	--	--	SPACE	18
19	SPACE	--	--	0 VA	0 VA					--	--	SPACE	20
21	SPACE	--	--			0 VA	0 VA			--	--	SPACE	22
23	SPACE	--	--					0 VA	0 VA	--	--	SPACE	24
25	SPACE	--	--	0 VA	0 VA					--	--	SPACE	26
27	SPACE	--	--			0 VA	0 VA			--	--	SPACE	28
29	SPACE	--	--					0 VA	0 VA	--	--	SPACE	30
31	SPACE	--	--	0 VA	0 VA					--	--	SPACE	32
33	SPACE	--	--			0 VA	0 VA			--	--	SPACE	34
35	SPACE	--	--					0 VA	0 VA	--	--	SPACE	36
37	SPARE	20 A	1	0 VA	0 VA					1	20 A	SPARE	38
39	SPARE	20 A	1			0 VA	0 VA			1	20 A	SPARE	40
41	SPARE	20 A	1					0 VA	0 VA	1	20 A	SPARE	42
			Total Load:	7750 VA		3600 VA		4650 VA					

Load Classification	Connected Load	Design Factor	Estimated Demand	Panel Totals	
Equipment	15500 VA	100.00%	15500 VA		
Motor	500 VA	125.00%	625 VA	**Total Conn. Load:**	16000 VA
				Total Est. Demand:	16125 VA
				Total Conn. Current:	44 A
				Total Est. Demand Current:	45 A
				Non-Coincident...	0 A
				Total Demand Current:	45 A

Notes:
1. TOTAL DEMAND CURRENT INCORPORATES ONLY THE NON-COINCIDENT PEAK LOAD BETWEEN HEATING AND COOLING.

STATE OF TEXAS
AARON McWHORTER
100310
LICENSED PROFESSIONAL ENGINEER
6.24.2021

US Army Corps of Engineers ®

MARK	DESCRIPTION	DATE

DESIGNED BY: A. MCWHORTER
DRAWN BY: S. WALCHER
CHECKED BY: V. MONTELLANO
SUBMITTED BY: E. OLMESS
SIZE: ANSI D
FILENAME: K408-923-E-603
ISSUE DATE: JUNE 2022
CONTRACT NO. : W912PP-22-R-0021

US ARMY CORPS OF ENGINEERS
ALBUQUERQUE
ALBUQUERQUE, NEW MEXICO

JACOBS
JACOBS ENGINEERING GROUP INC.
777 Main Street
Fort Worth, TX 76102

COMBAT RESCUE HELICOPTER SIMULATOR FACILITY
KIRTLAND AIR FORCE BASE (AFB)
BERNALILLO COUNTY, NEW MEXICO

PARTIAL RENOVATION BUILDING 923
PANEL SCHEDULES

SHEET ID
923
E-603

READY TO ADVERTISE

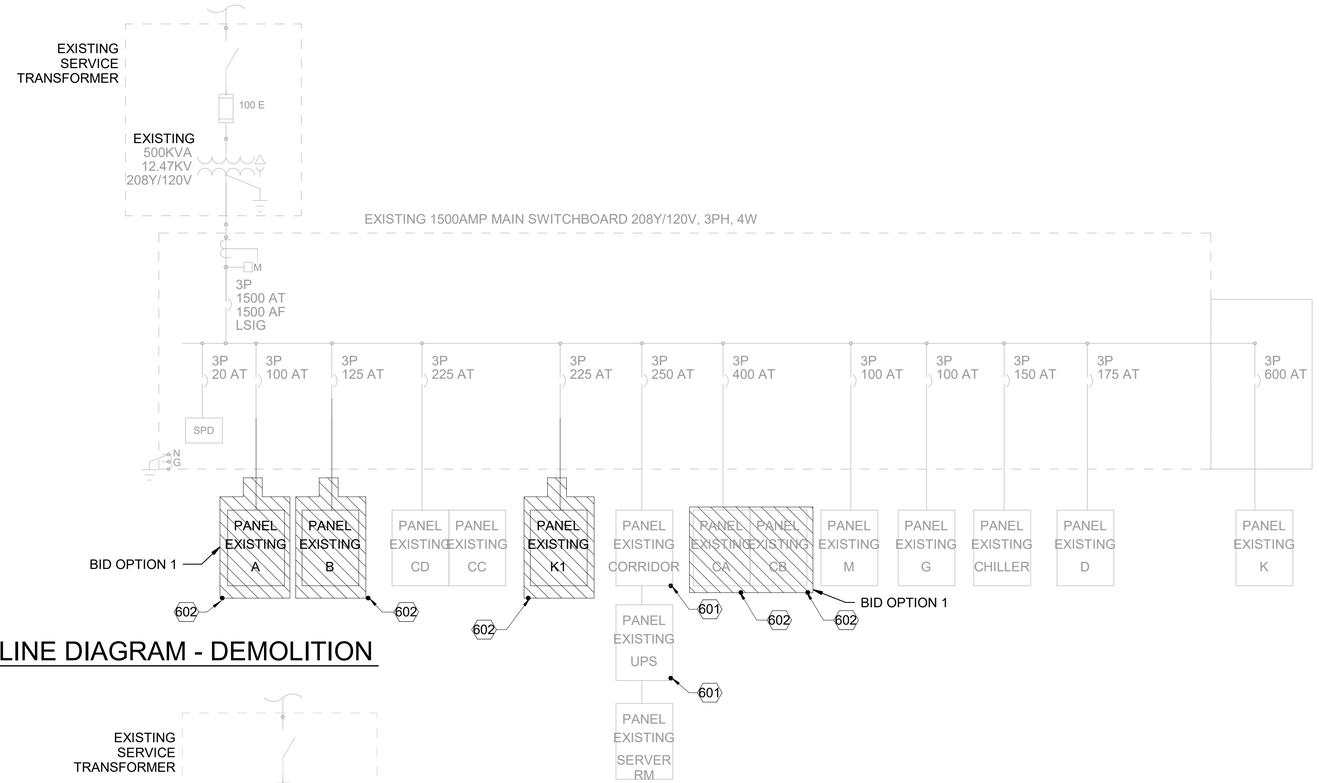

E2 ONE-LINE DIAGRAM - DEMOLITION
NTS

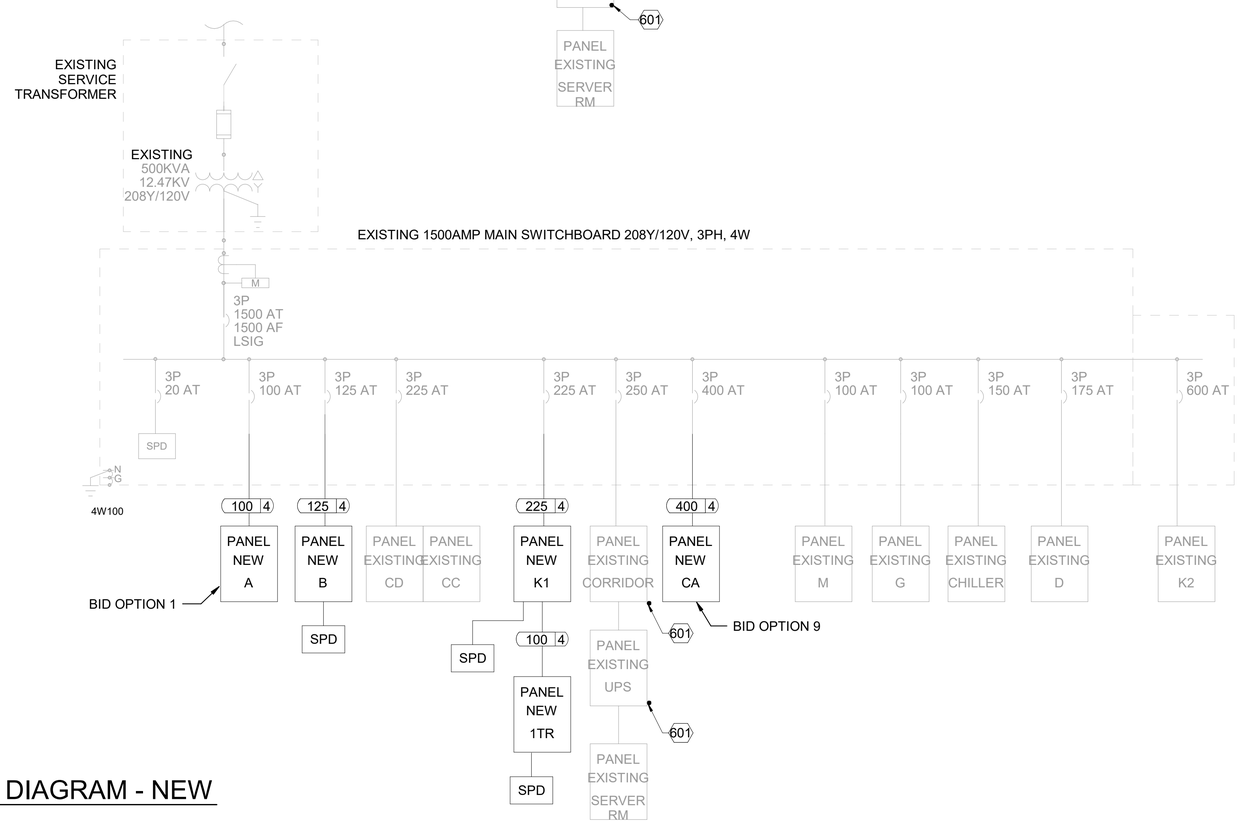

A2 ONE-LINE DIAGRAM - NEW
NTS

GENERAL NOTES - ONE-LINE

A	PANELS AND ELECTRICAL EQUIPMENT ARE EXISTING TO REMAIN UNLESS OTHERWISE NOTED. EXISTING ONE-LINE DIAGRAM IS FROM EXISTING DRAWINGS. VERIFY EXISTING CONDITIONS.
B	THE FACILITY SERVER ROOM UPS AND PANELBOARDS ARE TO REMAIN ACTIVE. PROVIDE MINIMUM 2-WEEK NOTICE FOR ELECTRICAL SERVICE DISRUPTION TO SERVER ROOM.
C	PANELS SCHEDULED FOR DEMOLITION MAY SERVE EXISTING TO REMAIN EQUIPMENT LOCATED OUTSIDE THE AREA OF DEMOLITION. WHERE THIS CONDITION OCCURS, INTERCEPT EXISTING TO REMAIN CIRCUITS AND EXTEND (MATCHING EXISTING CONDUIT AND WIRE SIZES AND RATINGS) TO THE NEAREST BRANCH PANELBOARD WITH SPACE THAT IS SCHEDULED TO REMAIN. PROVIDE NEW CIRCUIT BREAKERS FOR ANY SUCH RELOCATED CIRCUITS.
D	FIELD VERIFY EXISTING CONDITIONS AND WHERE EACH PANEL IS FED FROM, CONDUCTOR SIZES, AND CIRCUIT BREAKER SIZES. DOCUMENT AND SUBMIT CONFLICTS BETWEEN DRAWINGS AND IN THE FIELD.

KEYNOTES

601	VERIFY PANELS NOT IN AREA OF SCOPE OF WORK TO REMAIN ENERGIZED WITHOUT DISRUPTION. TRACE FEEDER, FEEDER CIRCUIT BREAKER AND LABEL ACCORDINGLY. COORDINATE ANY ELECTRICAL DOWNTIME WITH CONTRACTING OFFICER WITH WRITTEN APPROVAL.
602	REMOVE EXISTING PANEL AND FEEDER BACK TO MAIN SWITCHBOARD.

WIRE AND CONDUIT SCHEDULE	
100 4	4 #2 & 1 #8G, 1-1/4"C
125 4	4 #1/0 & 1 #6G, 2"C.
225 4	4 #4/0 & 1 #4G, 2-1/2"C.
400 4	4 #500KCMIL & 1 #3G, 4"C.

US Army Corps of Engineers ®

MARK	DESCRIPTION	DATE

DESIGNED BY: A. MCWHORTER
DRAWN BY: S. WALCHER
CHECKED BY: V. MONTELLANO
SUBMITTED BY: E. OLMESS
SIZE: ANSI D
ISSUE DATE: JUNE 2022
CONTRACT NO.: W912PP-22-R-0021
FILENAME: K486-923-E-701

US ARMY CORPS OF ENGINEERS
ALBUQUERQUE
ALBUQUERQUE, NEW MEXICO

JACOBS
JACOBS ENGINEERING GROUP INC.
777 Main Street
Fort Worth, TX 76102

COMBAT RESCUE HELICOPTER SIMULATOR FACILITY
KIRTLAND AIR FORCE BASE (AFB)
BERNALILLO COUNTY, NEW MEXICO
PARTIAL RENOVATION BUILDING 923
ONE-LINE DIAGRAM

STATE OF TEXAS
AARON McWHORTER
100310
LICENSED PROFESSIONAL ENGINEER
6.24.2021

SHEET ID
923
E-701

READY TO ADVERTISE

TELECOMMUNICATIONS SYMBOLS

- TWO-POST RACK WITH VERTICAL WIRE MANAGERS
- DATA CABINET
- TELEPHONE WALL OUTLET - (1) GREEN CAT. 6 (+48")
- NIPR DATA WALL OUTLET - (1) GREEN CAT. 6 - NIPR, (1) GRAY CAT. 6 - ATARS (X)
  M=MODULAR FURNITURE OUTLET, X= CABLE QUANTITY FOR EACH SYSTEM (SEE T-501)
- ADMIN DATA OUTLET - (4) GREEN CAT. 6 NIPR, (1) GRAY CAT. 6 - ATARS
- DATA FLOOR OUTLET - (1) GREEN CAT. 6 - NIPR, (1) GRAY CAT. 6 - ATARS
- POWER/DATA FLOOR OUTLET
  AV=AUDIO/VISUAL CONNECTION
- WALL MOUNTED JUNCTION BOX WITH FLEXIBLE WHIP TO FURNITURE
  BASE POWER FEED. MOUNT AT 18-INCHES ABOVE FINISHED FLOOR
- PRIMARY BONDING BUSBAR (PBB); SECONDARY BONDING BUSBAR (SBB)
- BEP — BUILDING ENTRANCE PROTECTION BLOCKS
- BASKET STYLE CABLE TRAY
- LADDER RACK
- CCTV CAMERA DATA OUTLET
- WAP — NIPR AND COMMERCIAL WIRELESS ACCESS POINT OUTLET
- A V — CEILING MOUNTED AUDIO-VISUAL OUTLET
- A V — WALL MOUNTED AUDIO-VISUAL OUTLET
- PULL BOX
- T — MAINTENANCE HOLE, E=ELEC, T=TELECOMM, P=PULLBOX, H=HANDHOLE
- T X — EXISTING MAINTENANCE HOLE, E=ELEC, T=TELECOM, P=PULLBOX, H=HANDHOLE
- — T — TELECOMMUNICATIONS DUCTBANK
- — T X — EXISTING TELECOMMUNICATIONS DUCTBANK
- TP — TELECOM POLE
  N = NIPR S = SIPR
- TV — CATV OUTLET
- P — POKE THROUGH
  N = NIPR, S = SIPR

TELECOMMUNICATIONS GENERAL NOTES

1. ALL SYMBOLS, ABBREVIATIONS AND GENERAL NOTES SHOWN ARE NOT NECESSARILY USED ON THIS PROJECT.
2. THESE CONTRACT DOCUMENTS ARE DIAGRAMMATIC AND SHOW THE DESIGN INTENT.
3. ALL WORK MUST COMPLY WITH ALL APPLICABLE CODES, AMENDMENTS, RULES, REGULATIONS, ORDINANCES, LAWS, ORDERS, APPROVALS, ETC., THAT ARE REQUIRED FOR THIS PROJECT.
4. COORDINATE THE WORK OF YOUR TRADE WITH ALL OTHER TRADES, AS WELL AS PORTABLE MOBILE EQUIPMENT.
5. DIRECT ALL WORK USING BEST PRACTICES. COORDINATE ALL CONSTRUCTION MEANS, METHODS, TECHNIQUES, SEQUENCES, AND PROCEDURES AND COORDINATE ALL PORTIONS OF THIS PROJECT.
6. CABLE TRAY MUST BE BASKET STYLE CABLE TRAY.
7. DATA CABLING MUST BE RUN IN CONDUIT FROM BASKET TRAY TO DATA OUTLET. CONDUIT MUST BE BONDED TO THE BASKET TRAYS.
8. CONDUIT FILL MUST NOT EXCEED 40%. INSTALLATION OF CONDUIT AND CABLING MUST BE IN COMPLIANCE WITH NFPA 70 (NEC).
9. MINIMUM CONDUIT SIZE FOR HORIZONTAL CABLING MUST BE 1".
10. ALL INTERIOR CABLING MUST BE PLENUM RATED.
11. STANDARD SLC HORIZONTAL NIPR DATA CABLING MUST BE (1) GREEN CAT. 6 FOR NIPR AND (1) GRAY CAT. 6 FOR ATARS.
12. WALL PHONES MUST BE (1) GREEN CAT. 6 CABLE.
13. WIRELESS ACCESS POINT (WAP) OUTLETS MUST CONSIST OF (1) GREEN CAT. 6 CABLE FOR NIPR WIFI AND (1) BLACK CAT. 6 CABLE FOR COMMERCIAL WIFI.
14. STANDARD ADMIN OFFICE AREA CABLING MUST BE (4) GREEN CAT. 6 FOR NIPR, (1) GRAY CAT. 6 FOR ATARS.
15. STANDARD DATA OUTLETS MUST BE 8-POSTION 8-CONTACT CATEGORY 6, COLOR-MATCHED TO THE CABLE AND WIRED WITH THE TIA T568B CONFIGURATION. .
16. STANDARD BACKBONE FIBER OPTIC CABLE MUST BE A 12 STRAND SINGLEMODE FIBER OPTIC CABLE. (1) CABLE FOR THE NIPR SYSTEM AND (1) CABLE FOR THE ATARS SYSTEM. CABLING IS TO RUN IN SEPARATE 2" CONDUITS TO THE SERVER ROOM IN THE ADJACENT PORTION OF THE BUILDING.
17. EXISTING BACKBONE COPPER CABLE IS A 25 PAIR CABLE LOCATED IN THE ELECTRICAL ROOM. CABLE MUST BE PROTECTED DURING DEMOLITION AND REINSTALLED IN THE NEW TELECOM ROOM.
18. ALL CABINETS, VERTICAL AND HORIZONTAL WIRE MANAGERS LOCATED IN THE TELECOM ROOMS MUST BE BLACK IN COLOR.
19. CABLE TRAY RADIUS DROPOUTS (WATERFALLS) ARE REQUIRED WHERE FIBER OPTIC AND COPPER CABLES TRANSITION IN ELEVATION. PROVIDE VELCRO TIES FOR CABLE SUPPORT IN TRANSITIONS.
20. NYLON CABLE TIES MUST NOT BE USED FOR CABLE SUPPORT, BUNDLING, OR FOR ANY OTHER MEANS OF RESTRAINING CABLES.
21. THE CONTRACTOR MUST INSTALL ALL COMPONENTS USING MANUFACTURER'S RECOMMENDED INSTALLATION PROCEDURES. ALL MATERIALS MUST BE NEW AND IN MANUFACTURER'S PACKAGING.
22. WHERE RACEWAYS CROSS STRUCTURAL EXPANSION JOINTS, PROVIDE EXPANSION JOINT FITTINGS.
23. THE CONTRACTOR MUST MAINTAIN ALL CABLE MINIMUM BENDING RADII ACCORDING TO THE CABLE MANUFACTURER.
24. SEISMIC BRACING OF BASKET TRAY, CABINETS, LADDER TRAY, CONDUITS, AND ALL OTHER SUSPENDED APPURTENANCES MUST BE BRACED PER DESIGN CATEGORY 'D' AND AN IMPORTANCE FACTOR OF 1.5 FOR ALL SEISMIC SUPPORT AND BRACING.
25. CONTRACTOR MUST PROVIDE CAT. 6 AND DUPLEX SINGLEMODE FIBER OPTIC PATCH CORDS FOR EACH WIRED CONNECTION PORT. CONTRACTOR MUST COORDINATE PATCH CORD LENGTHS WITH THE SYSTEM OWNER. PATCH CORD COLOR TO MATCH THE HORIZONTAL CABLE COLOR.
26. CONTRACTOR MUST INSTALL 4' X 8' X 3/4" FIRE TREATED PLYWOOD ON ALL FOUR WALLS IN THE TELECOM ROOM.
27. NO PIPING, DUCTS, OR EQUIPMENT FOREIGN TO TELECOMMUNICATIONS ROOMS WILL BE PERMITTED TO BE LOCATED IN OR ABOVE THE TELECOMMUNICATIONS ROOM.
28. CATV OUTLETS MUST RECEIVE ONE RG-6U QUAD SHIELDED CABLE.
29. EXISTING SECURITY SYSTEMS MUST REMAIN IN PLACE AND BE PROTECTED DURING DEMOLITION.
30. DATA CABINETS ARE TO HAVE FRONT AND REAR LOCKING DOORS.

REGISTERED COMMUNICATIONS DISTRIBUTION DESIGNER
Bicsi
Stephen A Leffler
BICSI ID # 110560
EXPIRES 12-31-22
RCDD
6.24.2021

US Army Corps of Engineers ®

MARK	DESCRIPTION	DATE

ISSUE DATE: JUNE 2022
CONTRACT NO.: W912PP-22-R-0021

DESIGNED BY: S. LEFFLER
DRAWN BY: S. LEFFLER
CHECKED BY: R. RUBIO
SUBMITTED BY: E. OLNESS
SIZE: ANSI D
FILENAME: K469-923-T-001

US ARMY CORPS OF ENGINEERS
ALBUQUERQUE
ALBUQUERQUE, NEW MEXICO

JACOBS
JACOBS ENGINEERING GROUP INC.
777 Main Street
Fort Worth, TX 76102

COMBAT RESCUE HELICOPTER SIMULATOR FACILITY
KIRTLAND AIR FORCE BASE (AFB),
BERNALILLO COUNTY, NEW MEXICO

PARTIAL RENOVATION BUILDING 923
GENERAL NOTES AND SYMBOLS

SHEET ID
923
T-001

READY TO ADVERTISE

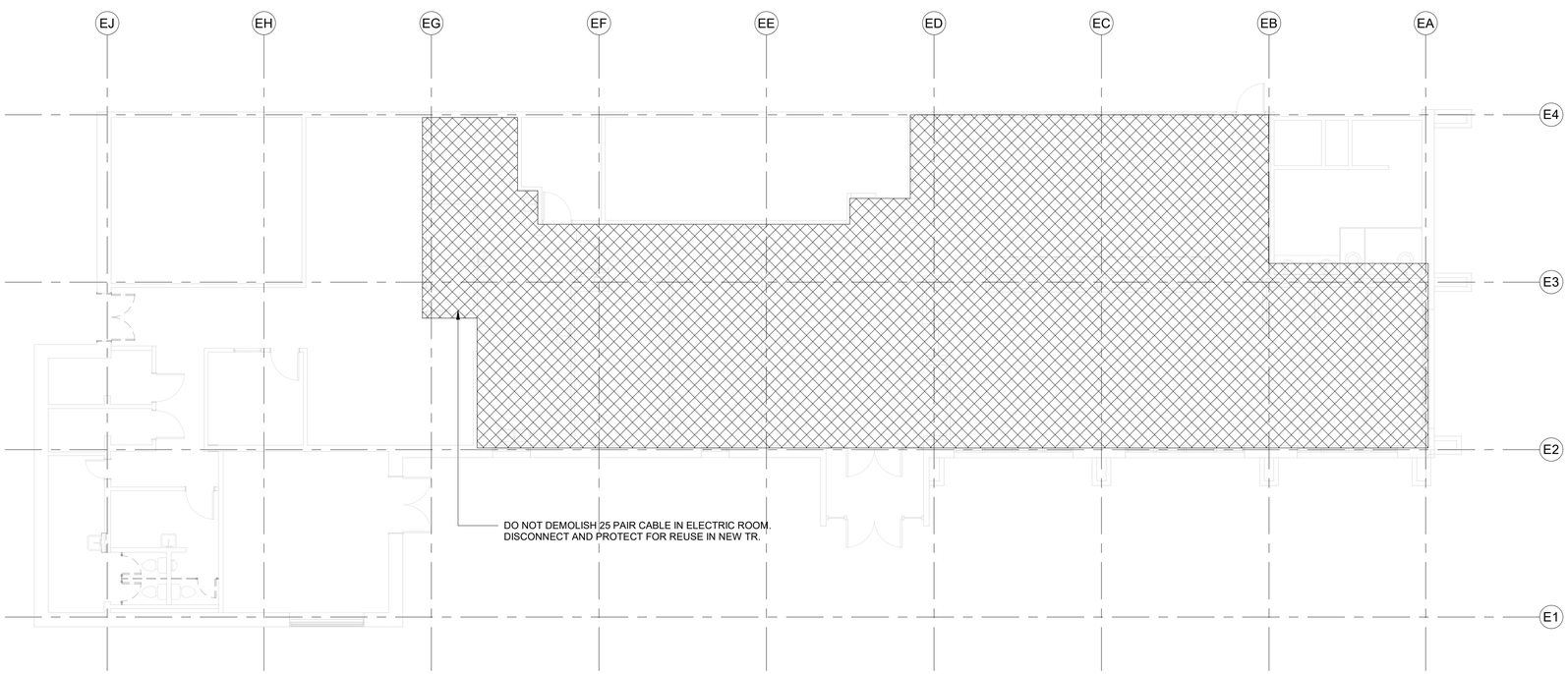

TELECOMMUNICATIONS DEMOLITION PLAN - BASE BID

A1

1/8" = 1'-0"

DEMOLITION SHEET NOTES - TELECOM

A.	DEMOLISH ALL VOICE AND DATA HORIZONTAL CABLING BACK TO SOURCE IN THE OPTION SHOWN.
B.	DO NOT DEMOLISH 25 PAIR CABLE IN ELECTRIC ROOM. DISCONNECT CABLE IN ELECTRIC ROOM AND PROTECT FOR USE IN NEW TELECOM ROOM.
C.	DO NOT DEMOLISH SECURITY CABLING, DEVICES OR SECURITY SYSTEMS EQUIPMENT. PROTECT IN PLACE FOR CONTINUED USE.

DEMOLITION LEGEND - BASE BID

DEMOLISH ALL HORIZONTAL VOICE AND DATA CABLING IN THIS AREA.
DO NOT DEMOLISH 25 PAIR CABLE IN ELECTRIC ROOM, DISCONNECT AND PROTECT FOR REUSE IN NEW TELECOM ROOM.
DO NOT DEMOLISH SECURITY CABLING, DEVICES OR CONTROL SYSTEMS.

KEY PLAN

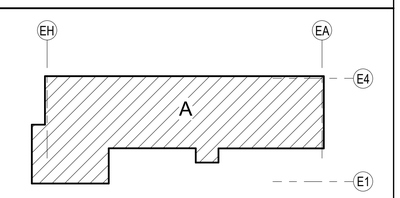

GRAPHIC SCALE

8 0 8 16

Scale: 1/8 INCH = 1 FOOT

PROJECT NORTH

PLAN NORTH

REGISTERED COMMUNICATIONS DISTRIBUTION DESIGNER
Bicsi
Stephen A Leffler
BICSI ID # 110560
Expires 12-31-21
REV RCD
6.24.2021

US Army Corps of Engineers ®

MARK	DESCRIPTION	DATE

ISSUE DATE: JUNE 2022
CONTRACT NO.: W912PP-22-R-0021

DESIGNED BY: S. LEFFLER
DRAWN BY: S. LEFFLER
CHECKED BY: R. RUBIO
SUBMITTED BY: E. FLOWERS
SIZE: ANSI D
FILENAME: KAB9923-TD110

US ARMY CORPS OF ENGINEERS
ALBUQUERQUE
ALBUQUERQUE, NEW MEXICO

JACOBS
JACOBS ENGINEERING GROUP INC.
777 Main Street
Fort Worth, TX 76102

COMBAT RESCUE HELICOPTER SIMULATOR FACILITY
KIRTLAND AIR FORCE BASE (AFB),
BERNALILLO COUNTY, NEW MEXICO

PARTIAL RENOVATION BUILDING 923

TELECOM DEMOLITION PLAN - BASE BID

SHEET ID
923
TD110

READY TO ADVERTISE

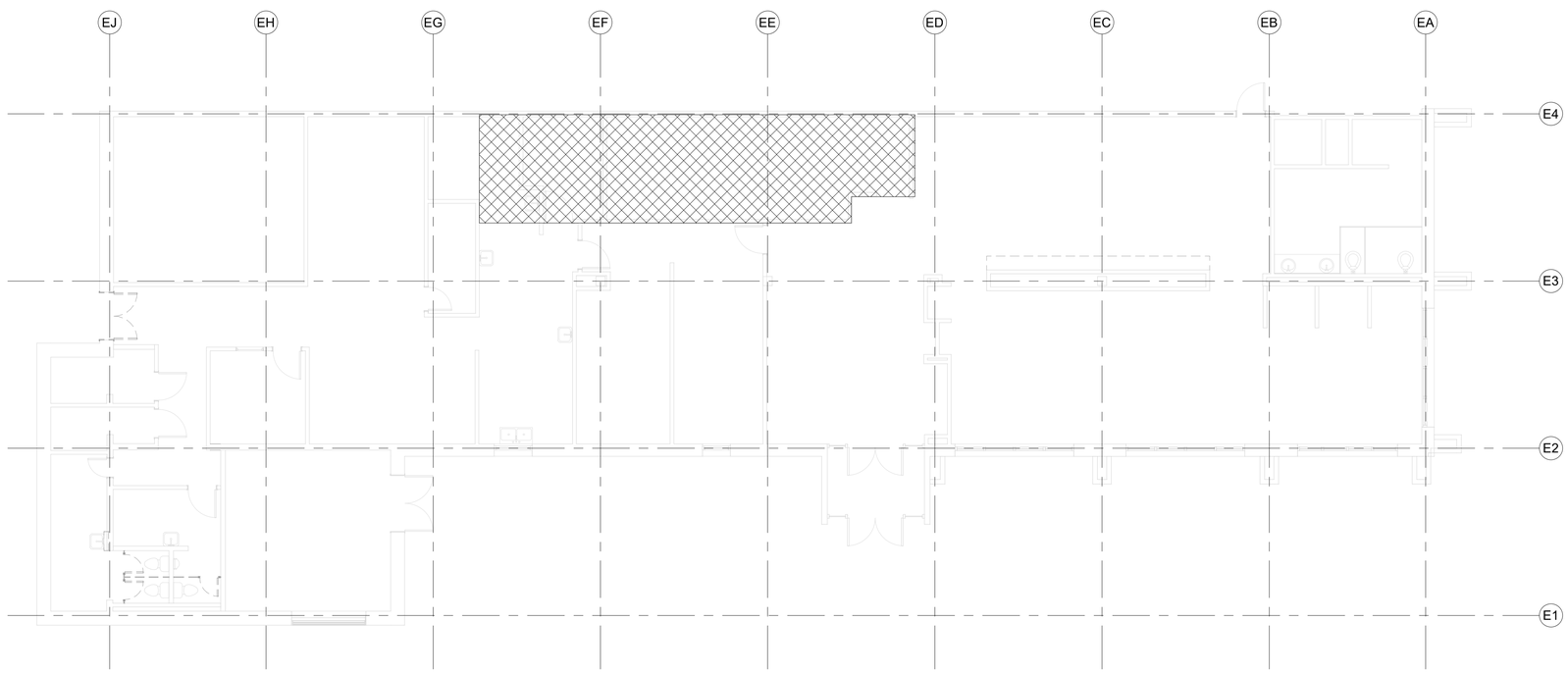

A1 TELECOMMUNICATIONS DEMOLITION PLAN - BID OPTION 1

1/8" = 1'-0"

DEMOLITION SHEET NOTES - TELECOM

A.	DEMOLISH ALL VOICE AND DATA HORIZONTAL CABLING BACK TO SOURCE IN THE OPTION SHOWN.
B.	DO NOT DEMOLISH 25 PAIR CABLE IN ELECTRIC ROOM. DISCONNECT CABLE IN ELECTRIC ROOM AND PROTECT FOR USE IN NEW TELECOM ROOM.
C.	DO NOT DEMOLISH SECURITY CABLING, DEVICES OR SECURITY SYSTEMS EQUIPMENT. PROTECT IN PLACE FOR CONTINUED USE.

DEMOLITION LEGEND - BID OPTION 1

DEMOLISH ALL HORIZONTAL VOICE AND DATA CABLING IN THIS AREA.
DO NOT DEMOLISH 25 PAIR CABLE RUNNING TO ELECTRIC ROOM.
DO NOT DEMOLISH SECURITY CABLING, DEVICES OR CONTROL SYSTEMS.

KEY PLAN

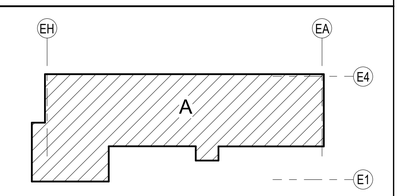

GRAPHIC SCALE

8 0 8 16

Scale: 1/8 INCH = 1 FOOT

PROJECT NORTH

PLAN NORTH

REGISTERED COMMUNICATIONS DISTRIBUTION DESIGNER
Bicsi
Stephen A Leffler
BICSI ID # 110560
EXPIRES 12-31-21
6.24.2021

US Army Corps of Engineers ®

MARK	DESCRIPTION	DATE

DESIGNED BY: S. LEFFLER
DRAWN BY: S. LEFFLER
CHECKED BY: R. RUBIO
SUBMITTED BY: E. OLNESS
SIZE: ANSI D
ISSUE DATE: JUNE 2022
CONTRACT NO.: W912PP-22-R-0021
FILENAME: KA69-923-TD111

US ARMY CORPS OF ENGINEERS
ALBUQUERQUE
ALBUQUERQUE, NEW MEXICO

JACOBS
JACOBS ENGINEERING GROUP INC.
777 Main Street
Fort Worth, Tx 76102

COMBAT RESCUE HELICOPTER SIMULATOR FACILITY
KIRTLAND AIR FORCE BASE (AFB)
BERNALILLO COUNTY, NEW MEXICO

PARTIAL RENOVATION BUILDING 923

TELECOM DEMOLITION PLAN - BID OPTION 1

SHEET ID
923
TD111

READY TO ADVERTISE

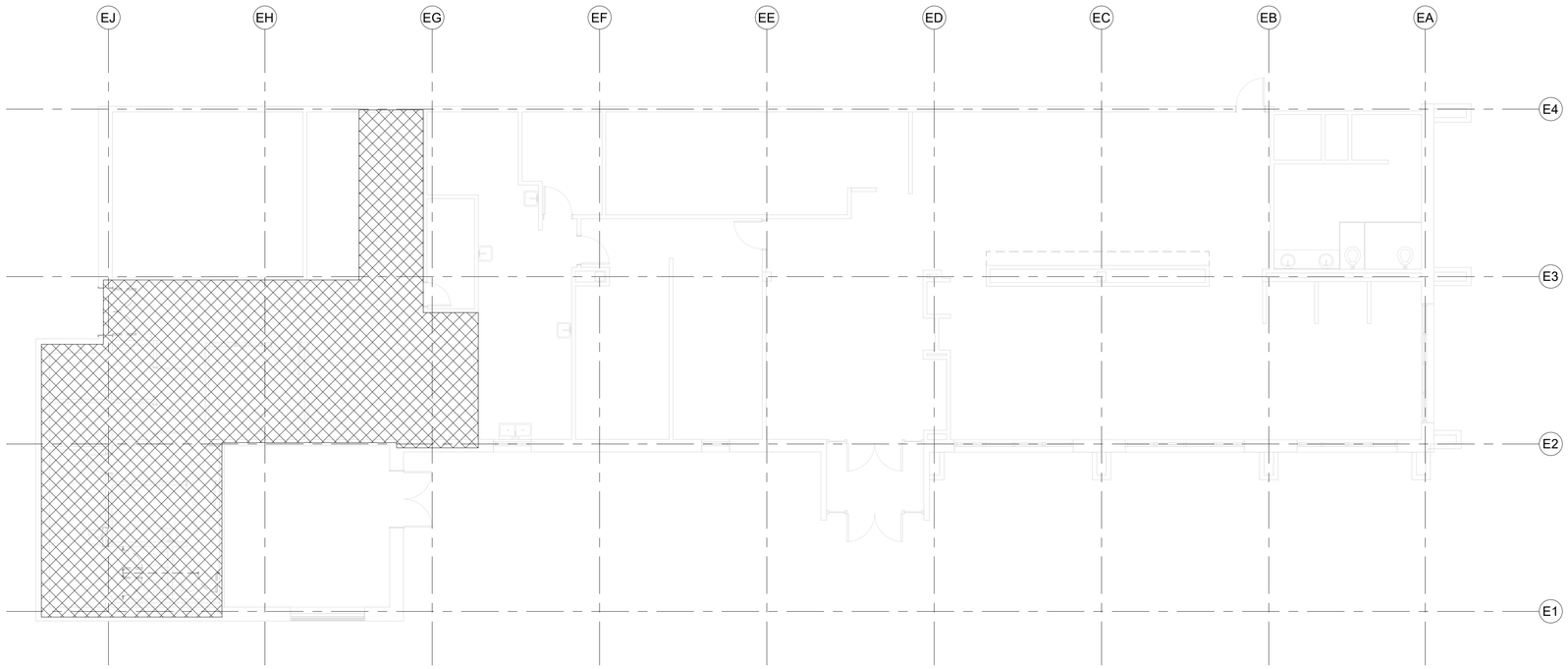

TELECOMMUNICATIONS DEMOLITION PLAN - BID OPTION 7

A1

1/8" = 1'-0"

DEMOLITION SHEET NOTES - TELECOM

A.	DEMOLISH ALL VOICE AND DATA HORIZONTAL CABLING BACK TO SOURCE IN THE OPTION SHOWN.
B.	DO NOT DEMOLISH 25 PAIR CABLE IN ELECTRIC ROOM. DISCONNECT CABLE IN ELECTRIC ROOM AND PROTECT FOR USE IN NEW TELECOM ROOM.
C.	DO NOT DEMOLISH SECURITY CABLING, DEVICES OR SECURITY SYSTEMS EQUIPMENT. PROTECT IN PLACE FOR CONTINUED USE.

DEMOLITION LEGEND - BID OPTION 7

DEMOLISH ALL HORIZONTAL VOICE AND DATA CABLING IN THIS AREA.
DO NOT DEMOLISH SECURITY CABLING, DEVICES OR CONTROL SYSTEMS.

KEY PLAN

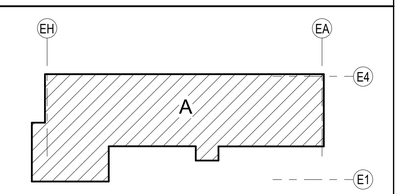

GRAPHIC SCALE

8 0 8 16

Scale: 1/8 INCH = 1 FOOT

PROJECT NORTH

PLAN NORTH

REGISTERED COMMUNICATIONS DISTRIBUTION DESIGNER
Bicsi
Stephen A Leffler
BICSI ID # 110560
EXPIRES 12-31-22
RCDD
6.24.2021

US Army Corps of Engineers ®

MARK	DESCRIPTION	DATE

ISSUE DATE: JUNE 2022
CONTRACT NO.: W912PP-22-R-0021

DESIGNED BY: S. LEFFLER
DRAWN BY: S. LEFFLER
CHECKED BY: R. RUBIO
SUBMITTED BY: E. OLNESS
SIZE: ANSI D
FILENAME: KA69-923-TD112

US ARMY CORPS OF ENGINEERS
ALBUQUERQUE
ALBUQUERQUE, NEW MEXICO

JACOBS
JACOBS ENGINEERING GROUP INC.
777 Main Street
Fort Worth, TX 76102

COMBAT RESCUE HELICOPTER SIMULATOR FACILITY
KIRTLAND AIR FORCE BASE (AFB),
BERNALILLO COUNTY, NEW MEXICO

PARTIAL RENOVATION BUILDING 923
TELECOM DEMOLITION PLAN - BID OPTION 7

SHEET ID
923
TD112

READY TO ADVERTISE

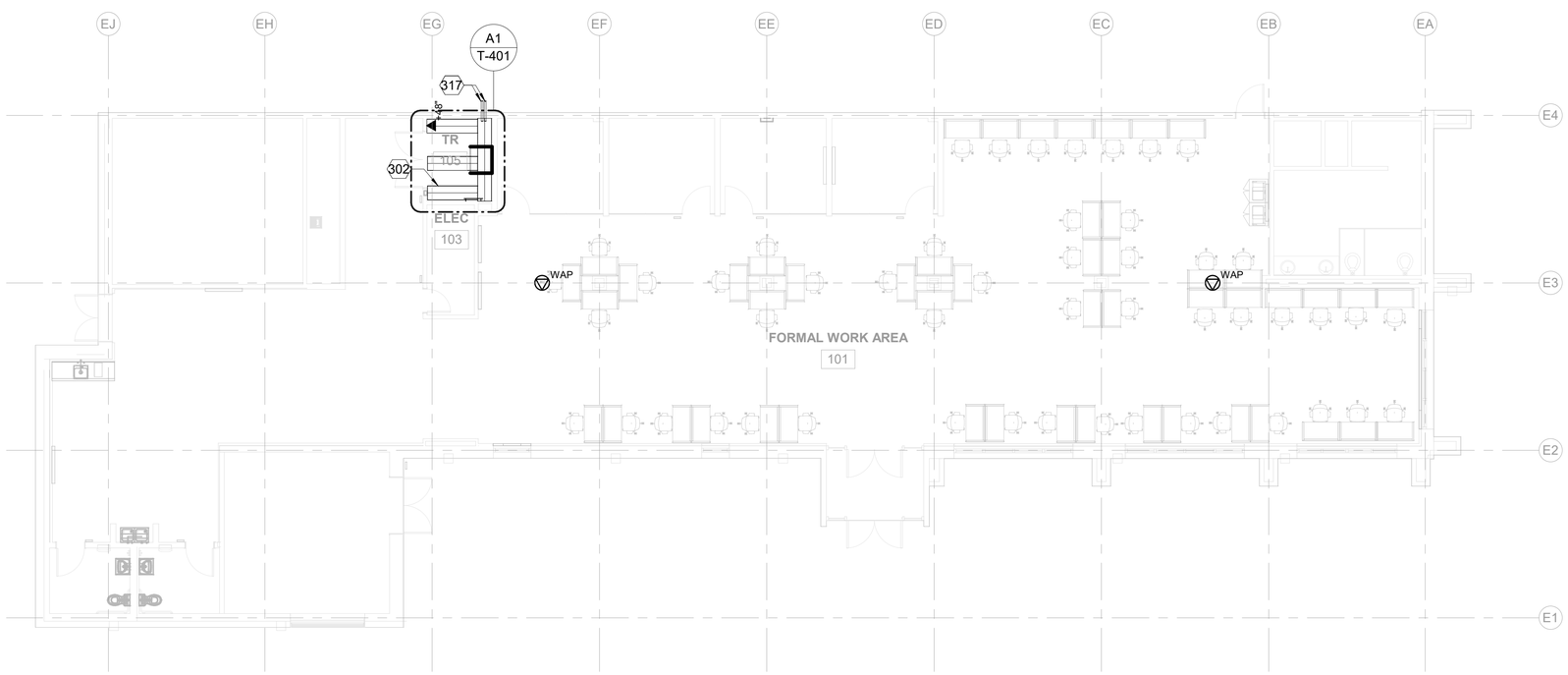

A1 TELECOMMUNICATIONS PLAN - BASE BID
1/8" = 1'-0"

GENERAL NOTES - TELECOM

A	SEE SHEET T-001 FOR SYMBOLS AND GENERAL NOTES

KEYNOTES

302	18"W X 4" D BASKET TRAY. MOUNT AT 8'-0" AFF.
317	PROVIDE (2) 2" CONDUITS FROM TR TO SERVER ROOM ON OPPOSITE SIDE OF BUILDING FOR NIPR AND ATARS FIBER OPTIC CABLES. INSTALL ONE FIBER OPTIC CABLE IN EACH CONDUIT.

TELECOM SHEET NOTES - BASE BID

1	PROVIDE BUILDOUT OF TELECOM ROOM INCLUDING OVERHEAD BASKET TRAY.
2	PROVIDE NIPR DATA CABINET.
3	PROVIDE NIPR 12 STRAND SINGLEMODE FIBER OPTIC CABLE IN CONDUIT BACK TO SERVER ROOM
4	PROVIDE FIBER OPTIC PATCH PANELS AT BOTH ENDS OF FIBER, TERMINATED WITH DUPLEX LC CONNECTORS.
5	PROVIDE CAT. 6 PATCH PANELS AND WIREMANAGERS AS SHOWN ON A6/T-401
6	PROVIDE CAT. 6 CABLING FOR (2) WIRELESS ACCESS POINT DATA OUTLETS IN LOCATIONS SHOWN ON PLAN DRAWING.

KEY PLAN

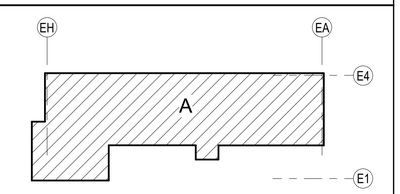

GRAPHIC SCALE

8 0 8 16
Scale: 1/8 INCH = 1 FOOT

PROJECT NORTH

PLAN NORTH

REGISTERED COMMUNICATIONS DISTRIBUTION DESIGNER
Bicsi
Stephen A Leffler
BICSI ID # 110560
Expires 12-31-21
6.24.2021

US Army Corps of Engineers ®

MARK	DESCRIPTION	DATE

DESIGNED BY: S. LEFFLER
DRAWN BY: S. LEFFLER
CHECKED BY: R. RUBIO
SUBMITTED BY: E. OLMESS
SIZE: ANSI D
ISSUE DATE: JUNE 2022
CONTRACT NO.: W912PP-22-R-0021
FILENAME: K486923-T-110

US ARMY CORPS OF ENGINEERS
ALBUQUERQUE
ALBUQUERQUE, NEW MEXICO

JACOBS
JACOBS ENGINEERING GROUP INC.
777 Main Street
FORT WORTH, TX 76102

COMBAT RESCUE HELICOPTER SIMULATOR FACILITY
KIRTLAND AIR FORCE BASE (AFB),
BERNALILLO COUNTY, NEW MEXICO

PARTIAL RENOVATION BUILDING 923
TELECOM PLAN - BASE BID

SHEET ID
923
T-110

READY TO ADVERTISE

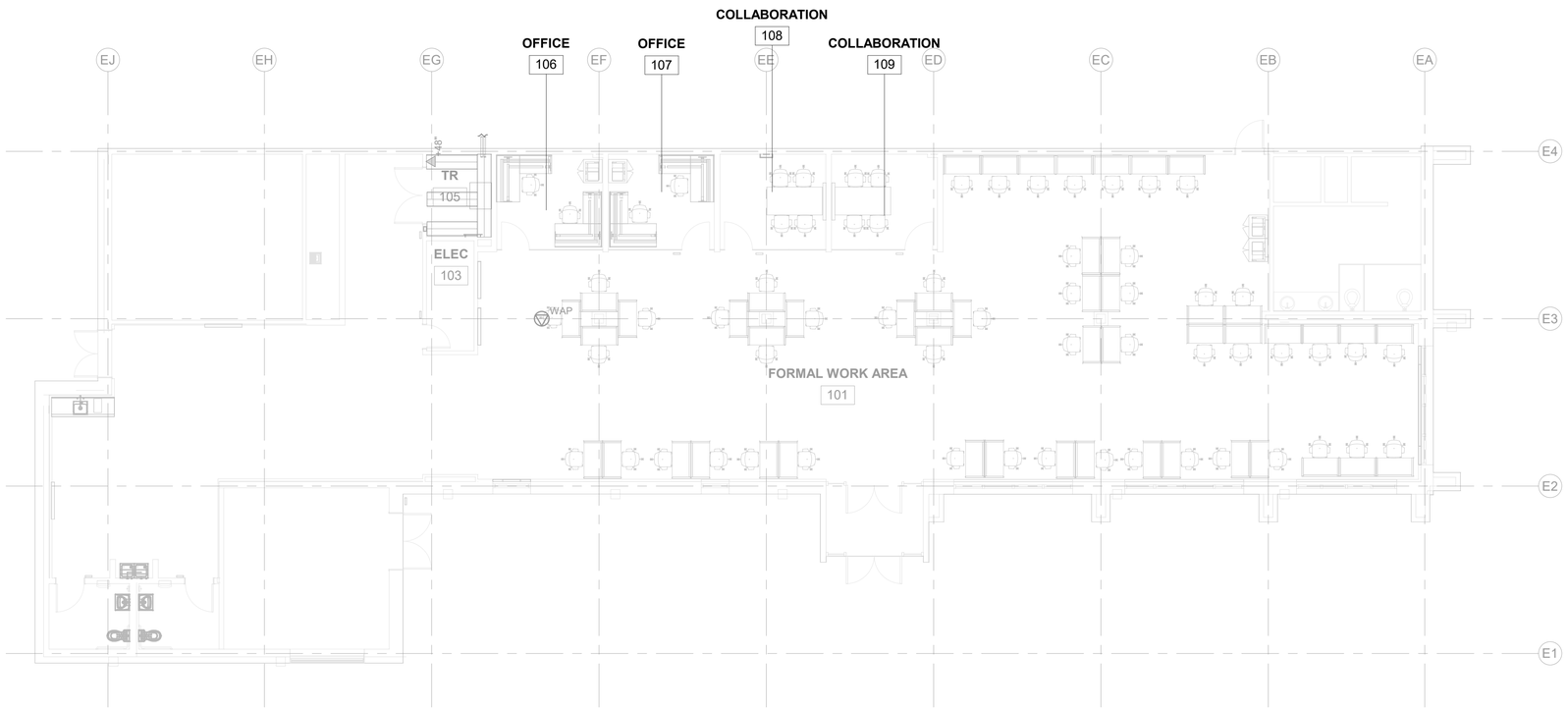

TELECOMMUNICATIONS PLAN - BID OPTION 1

A1

1/8" = 1'-0"

GENERAL NOTES - TELECOM

A	SEE SHEET T-001 FOR SYMBOLS AND GENERAL NOTES

TELECOM SHEET NOTES - BID OPTION 1

1	PROVIDE CONDUIT AND FLUSH MOUNTED BOXES FOR DATA AND AV OUTLETS IN ROOMS 106. 107, 108, 109.
2	NO DATA CABLING IS TO BE INSTALLED.

KEY PLAN

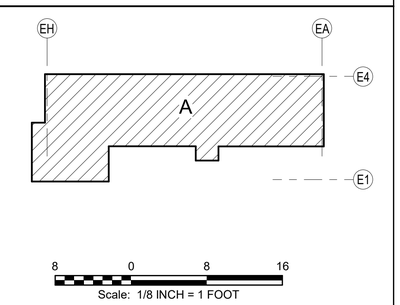

PROJECT NORTH

PLAN NORTH

REGISTERED COMMUNICATIONS DISTRIBUTION DESIGNER
Bicsi
Stephen A Leffler
BICSI ID # 110560
EXPIRES 12-31-22
RCDD
6.24.2021

US Army Corps of Engineers ®

MARK	DESCRIPTION	DATE

ISSUE DATE: JUNE 2022
CONTRACT NO.: W912PP-22-R-0021
DESIGNED BY: S. LEFFLER
DRAWN BY: S. LEFFLER
CHECKED BY: R. RUBIO
SUBMITTED BY: E. OLMESS
SIZE: ANSI D
FILENAME: K469-923-T-111

US ARMY CORPS OF ENGINEERS
ALBUQUERQUE
ALBUQUERQUE, NEW MEXICO

JACOBS
JACOBS ENGINEERING GROUP INC.
777 Main Street
Fort Worth, Texas 76102

COMBAT RESCUE HELICOPTER SIMULATOR FACILITY
KIRTLAND AIR FORCE BASE (AFB),
BERNALILLO COUNTY, NEW MEXICO

PARTIAL RENOVATION BUILDING 923
TELECOM PLAN - BID OPTION 1

SHEET ID
923
T-111

READY TO ADVERTISE

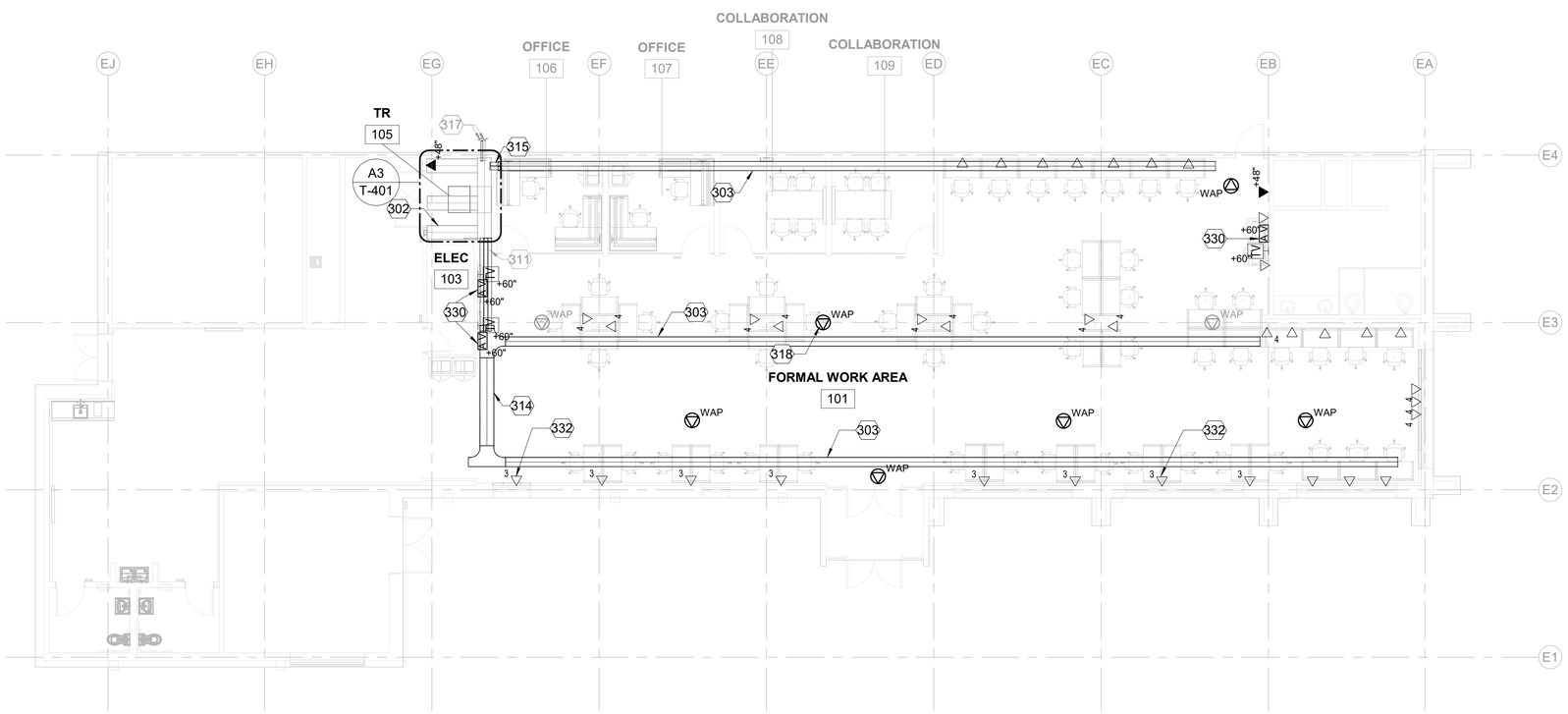

TELECOMMUNICATIONS PLAN - BID OPTION 2

A1

1/8" = 1'-0"

GENERAL NOTES - TELECOM

A	SEE SHEET T-001 FOR SYMBOLS AND GENERAL NOTES

KEYNOTES

302	18"W X 4" D BASKET TRAY. MOUNT AT 8'-0" AFF.
303	12"W X 4"D BASKET TRAY. MOUNT AT 10'-0" AFF..
311	(3) 4" CONDUITS THROUGH WALL FOR NIPR AND ATARS CABLES. RUN CONDUIT ACROSS GYP BOARD CEILING TO 18" BASKET TRAY. PROVIDE BONDING BUSHINGS ON BOTH ENDS OF CONDUITS. FIRESTOP CONDUITS AFTER CABLE INSTALLATION.
314	18"W X 4"D BASEKT TRAY CABLE TRAY MOUNTED AT 10'-0" AFF
315	(2) 4" SLEEVES FOR NIPR AND ATARS CABLES.
317	PROVIDE (2) 2" CONDUITS FROM TR TO SERVER ROOM ON OPPOSITE SIDE OF BUILDING FOR NIPR AND ATARS FIBER OPTIC CABLES. INSTALL ONE FIBER OPTIC CABLE IN EACH CONDUIT.
318	DATA OUTLET FOR WAP. MOUNT AT 12" ABOVE CEILING (TYP).
330	AV OUTLET FOR FORMAL WORKROOM AREA. MOUNT ONE AV OUTLET AT +60" AFF FOR THE TV. PROVIDE 1-1/4" CONDUIT FROM TV AV BOX FOR HDMI CABLE BACK TO ADMIN DESK IN COLLABORATION ROOM 106. SEE T-701/A6
332	MOUNT DATA OUTLETS ON SOUTH WALL AT 24" AFF.(TYP)

TELECOM SHEET NOTES - BID OPTION 2

1	PROVIDE SURFACE MOUNTED CONDUIT IN ROOM 101 FOR DATA AND AV CABLING.
2	PROVIDE CATEGORY 6 DATA CABLING IN ROOM 101.
3	PROVIDE ADDTIONAL WIRE MANAGERS AND CATEGORY 6 PATCH PANELS IN TELECOM ROOM NIPR CABINET.
4	PROVIDE ATARS CABINET IN TELECOM ROOM.
5	PROVIDE ATARS 12 STRAND SINGLE MODE FIBER OPTIC CABLE IN CONDUIT FROM TELECOM ROOM TO SERVER ROOM. PROVIDE FIBER OPTIC PATCH PANELS AT BOTH ENDS AND TERMINATE FIBER OPTIC CABLE WITH DUPLEX LC CONNECTORS
6	INSTALL 25 PAIR CABLE ON BACKBOARD AND EXTEND 25 PAIRS TO NIPR CABINET.
7	PROVIDE DATA OUTLETS FOR WIRELESS ACCESS POINTS.

KEY PLAN

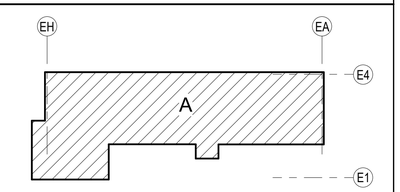

GRAPHIC SCALE

8 0 8 16

Scale: 1/8 INCH = 1 FOOT

PROJECT NORTH

PLAN NORTH

REGISTERED COMMUNICATIONS DISTRIBUTION DESIGNER
Bicsi
Stephen A Leffler
BICSI ID # 110560
EXPIRES 12-31-22
RCDD
6.24.2021

US Army Corps of Engineers ®

MARK	DESCRIPTION	DATE

US ARMY CORPS OF ENGINEERS
ALBUQUERQUE
ALBUQUERQUE, NEW MEXICO

JACOBS
JACOBS ENGINEERING GROUP INC.
777 Main Street
Fort Worth, TX 76102

DESIGNED BY: S. LEFFLER
DRAWN BY: S. LEFFLER
CHECKED BY: R. RUBIO
SUBMITTED BY: E. OLMESS
SIZE: ANSI D
ISSUE DATE: JUNE 2022
CONTRACT NO.: W912PP-22-R-0021
FILENAME: K4089423-T-112

COMBAT RESCUE HELICOPTER SIMULATOR FACILITY
KIRTLAND AIR FORCE BASE (AFB),
BERNALILLO COUNTY, NEW MEXICO

PARTIAL RENOVATION BUILDING 923
TELECOM PLAN - BID OPTION 2

SHEET ID
923
T-112

READY TO ADVERTISE

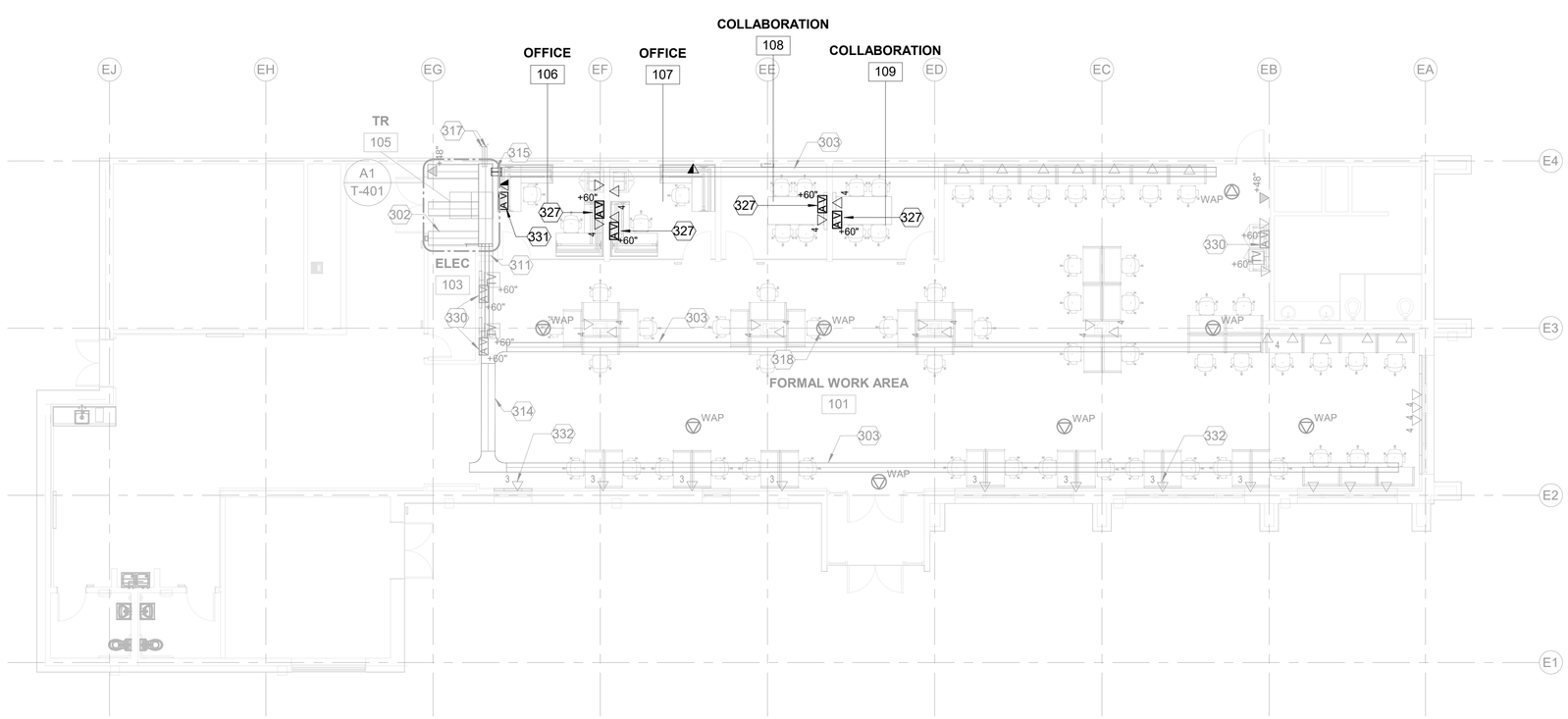

TELECOMMUNICATIONS PLAN - BID OPTION 3

A1 1/8" = 1'-0"

GENERAL NOTES - TELECOM

A	SEE SHEET T-001 FOR SYMBOLS AND GENERAL NOTES

KEYNOTES

302	18"W X 4" D BASKET TRAY. MOUNT AT 8'-0" AFF.
303	12"W X 4"D BASKET TRAY. MOUNT AT 10'-0" AFF..
311	(3) 4" CONDUITS THROUGH WALL FOR NIPR AND ATARS CABLES. RUN CONDUIT ACROSS GYP BOARD CEILING TO 18" BASKET TRAY. PROVIDE BONDING BUSHINGS ON BOTH ENDS OF CONDUITS. FIRESTOP CONDUITS AFTER CABLE INSTALLATION.
314	18"W X 4"D BASEKT TRAY CABLE TRAY MOUNTED AT 10'-0" AFF
315	(2) 4" SLEEVES FOR NIPR AND ATARS CABLES.
317	PROVIDE (2) 2" CONDUITS FROM TR TO SERVER ROOM ON OPPOSITE SIDE OF BUILDING FOR NIPR AND ATARS FIBER OPTIC CABLES. INSTALL ONE FIBER OPTIC CABLE IN EACH CONDUIT.
318	DATA OUTLET FOR WAP. MOUNT AT 12" ABOVE CEILING (TYP).
327	AV OUTLET FOR COLLABORATION ROOM. MOUNT (1) HDMI OUTLET AT 48" AND (1) AT 18". TIE OUTLETS TOGETHER WITH 1-1/4" CONDUIT. SEE T-701/F1.
330	AV OUTLET FOR FORMAL WORKROOM AREA. MOUNT ONE AV OUTLET AT +60" AFF FOR THE TV. PROVIDE 1-1/4" CONDUIT FROM TV AV BOX FOR HDMI CABLE BACK TO ADMIN DESK IN COLLABORATION ROOM 106. SEE T-701/A6
331	LOCATION FOR ALL HDMI CABLES TO ADMIN CONTROLLED TV MONITORS
332	MOUNT DATA OUTLETS ON SOUTH WALL AT 24" AFF.(TYP)

TELECOM SHEET NOTES - BID OPTION 3

1	PROVIDE NIPR AND ATARS CABLING AND DATA OUTLETS IN ROOMS 106, 107, 108 AND 109.
2	PROVIDE NIPR AND ATARS CATEGORY 6 PATCH PANELS AND WIRE MANAGERS IN TELECOM ROOM.

KEY PLAN

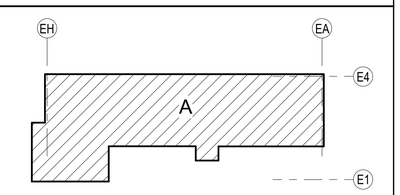

GRAPHIC SCALE

8 0 8 16

Scale: 1/8 INCH = 1 FOOT

PROJECT NORTH

PLAN NORTH

REGISTERED COMMUNICATIONS DISTRIBUTION DESIGNER
Bicsi
Stephen A Leffler
BICSI ID # 110560
EXPIRES 12-31-21
RCDD
6.24.2021

US Army Corps of Engineers ®

MARK	DESCRIPTION	DATE

ISSUE DATE: JUNE 2022
CONTRACT NO.: W912PP-22-R-0021

DESIGNED BY: S. LEFFLER
DRAWN BY: S. LEFFLER
CHECKED BY: R. RUBIO
SUBMITTED BY: E. OLMESS
SIZE: ANSI D
FILENAME: K469-923-T-113

US ARMY CORPS OF ENGINEERS
ALBUQUERQUE
ALBUQUERQUE, NEW MEXICO

JACOBS
JACOBS ENGINEERING GROUP INC.
777 Main Street
Fort Worth, Texas 76102

COMBAT RESCUE HELICOPTER SIMULATOR FACILITY
KIRTLAND AIR FORCE BASE (AFB),
BERNALILLO COUNTY, NEW MEXICO

PARTIAL RENOVATION BUILDING 923
TELECOM PLAN - BID OPTION 3

SHEET ID
923
T-113

READY TO ADVERTISE

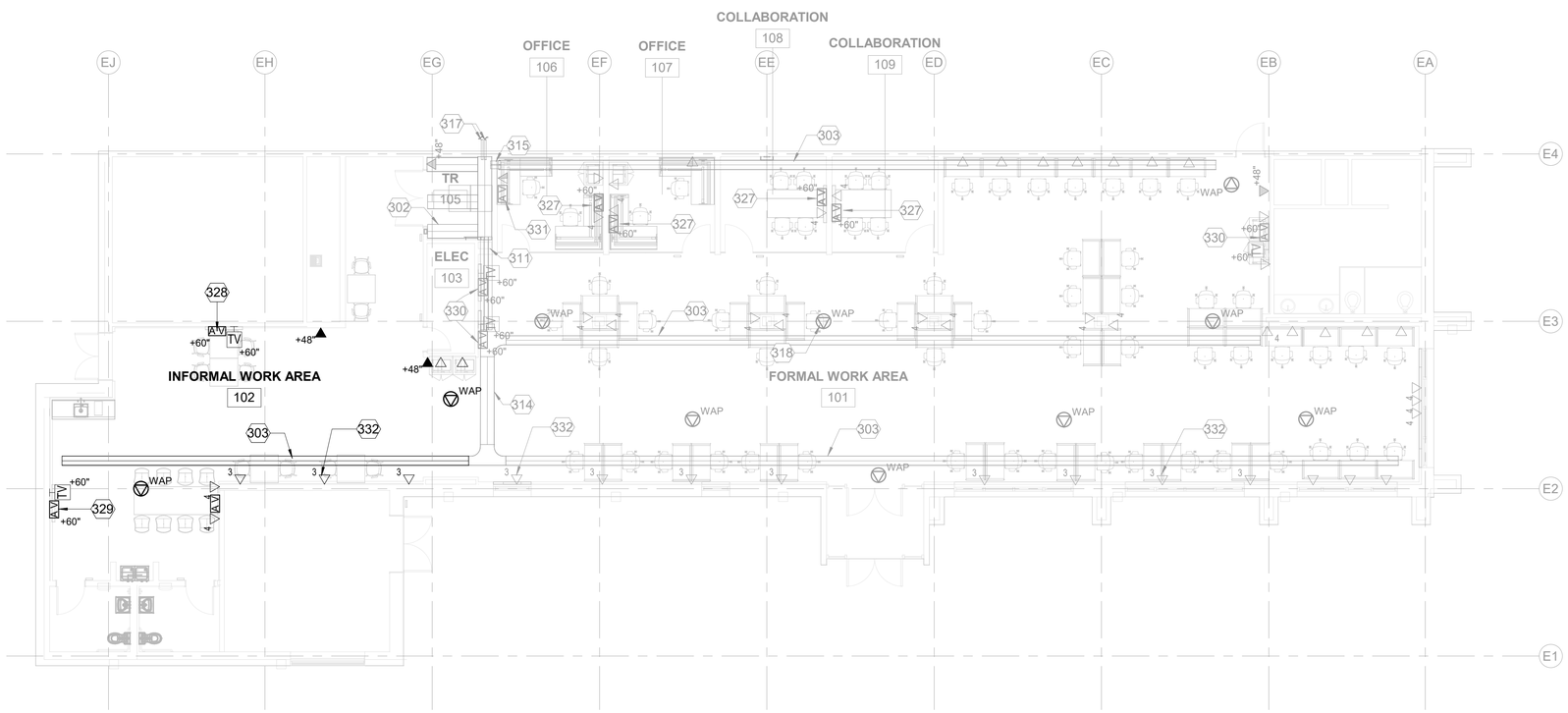

TELECOMMUNICATIONS PLAN - BID OPTION 8

A1

1/8" = 1'-0"

GENERAL NOTES - TELECOM

A	SEE SHEET T-001 FOR SYMBOLS AND GENERAL NOTES

KEYNOTES

302	18"W X 4" D BASKET TRAY. MOUNT AT 8'-0" AFF.
303	12"W X 4"D BASKET TRAY. MOUNT AT 10'-0" AFF..
311	(3) 4" CONDUITS THROUGH WALL FOR NIPR AND ATARS CABLES. RUN CONDUIT ACROSS GYP BOARD CEILING TO 18" BASKET TRAY. PROVIDE BONDING BUSHINGS ON BOTH ENDS OF CONDUITS. FIRESTOP CONDUITS AFTER CABLE INSTALLATION.
314	18"W X 4"D BASEKT TRAY CABLE TRAY MOUNTED AT 10'-0" AFF
315	(2) 4" SLEEVES FOR NIPR AND ATARS CABLES.
317	PROVIDE (2) 2" CONDUITS FROM TR TO SERVER ROOM ON OPPOSITE SIDE OF BUILDING FOR NIPR AND ATARS FIBER OPTIC CABLES. INSTALL ONE FIBER OPTIC CABLE IN EACH CONDUIT.
318	DATA OUTLET FOR WAP. MOUNT AT 12" ABOVE CEILING (TYP).
327	AV OUTLET FOR COLLABORATION ROOM. MOUNT (1) HDMI OUTLET AT 48" AND (1) AT 18". TIE OUTLETS TOGETHER WITH 1-1/4" CONDUIT. SEE T-701/F1.
328	AV OUTLET FOR 4 PERSON DESK IN INFORMAL WORKROOM AREA. MOUNT ONE AV OUTLET AT +60" AFF FOR THE TV AND (1) ONE OUTLET AT 18" AFF FOR THE DESK.TIE AV OUTLETS TOGETHER WITH 1-1/4" CONDUIT. PROVIDE 1-1/4" CONDUIT FROM TV BOX FOR HDMI CABLE BACK TO ADMIN DESK IN COLLABORATION ROOM 106. SEE T-701/D1.
329	AV OUTLET FOR 8 PERSON DESK IN INFORMAL WORKROOM AREA. MOUNT ONE AV OUTLET AT +60" AFF FOR THE TV AND (1) ONE OUTLET AT 18" AFF FOR THE DESK. TIE AV OUTLETS TOGETHER WITH 1-1/4" CONDUIT. PROVIDE 1-1/4" FROM TV AV BOX FOR HDMI CABLE BACK TO ADMIN DESK IN COLLABORATION ROOM 106. SEE T-701/D6
330	AV OUTLET FOR FORMAL WORKROOM AREA. MOUNT ONE AV OUTLET AT +60" AFF FOR THE TV. PROVIDE 1-1/4" CONDUIT FROM TV AV BOX FOR HDMI CABLE BACK TO ADMIN DESK IN COLLABORATION ROOM 106. SEE T-701/A6
331	LOCATION FOR ALL HDMI CABLES TO ADMIN CONTROLLED TV MONITORS
332	MOUNT DATA OUTLETS ON SOUTH WALL AT 24" AFF.(TYP)

TELECOM SHEET NOTES - BID OPTION 8

1	PROVIDE BASKET TRAY INTO ROOM 102
2	PROVIDE CONDUIT AND FLUSH MOUNTED BOXES FOR DATA AND AV OUTLETS.
3	PROVIDE NIPR AND ATARS CATEGORY 6 CABLING, DATA OUTLETS, PATCH PANELS AND WIRE MANAGERS.
4	PROVIDE NIPR CATEGORY 6 CABLING AND DATA OUTLETS FOR WIRELESS ACCESS POINT DATA OUTLETS.

KEY PLAN

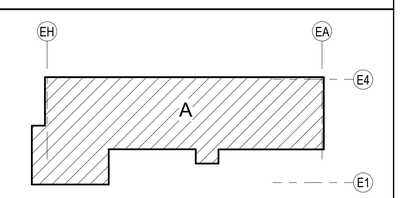

GRAPHIC SCALE

8 0 8 16

Scale: 1/8 INCH = 1 FOOT

PROJECT NORTH

PLAN NORTH

REGISTERED COMMUNICATIONS DISTRIBUTION DESIGNER
Bicsi
Stephen A Leffler
BICSI ID # 110560
EXPIRES 12-31-22
RCDD
6.24.2021

US Army Corps of Engineers ®

MARK	DESCRIPTION	DATE

ISSUE DATE: JUNE 2022
CONTRACT NO.: W912PP-22-R-0021

DESIGNED BY: S. LEFFLER
DRAWN BY: S. LEFFLER
CHECKED BY: R. RUBIO
SUBMITTED BY: E. FLINESS
SIZE: ANSI D
FILENAME: K469-923-T-114

US ARMY CORPS OF ENGINEERS
ALBUQUERQUE
ALBUQUERQUE, NEW MEXICO

JACOBS
JACOBS ENGINEERING GROUP INC.
777 Main Street
Fort Worth, TX 76102

COMBAT RESCUE HELICOPTER SIMULATOR FACILITY
KIRTLAND AIR FORCE BASE (AFB),
BERNALILLO COUNTY, NEW MEXICO

PARTIAL RENOVATION BUILDING 923
TELECOM PLAN - BID OPTION 8

SHEET ID
923
T-115

READY TO ADVERTISE

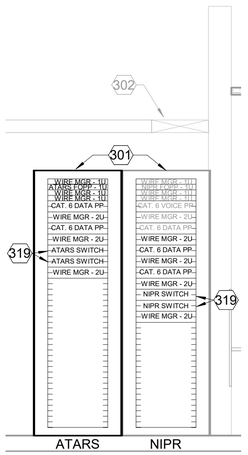

NOTE: PROVIDE CABLING FOR ATARS, ATARS FIBER OPTIC CABLE TO SERVER ROOM, PATCH PANELS AND WIRE MANAGERS. PROVIDE CABLING FOR NIPR, ADDITIONAL PATCH PANELS AND WIRE MANAGERS FOR NIPR CABINET. PROVIDE ADDITIONAL PATCH PANELS AND WIRE MANAGERS IN BOTH CABINETS IF OPTION 9 IS ADDED

E1 BID OPTION 2, 3, 8 - TELECOM ROOM 104 - CABINET ELEVATION

1/2" = 1'-0"

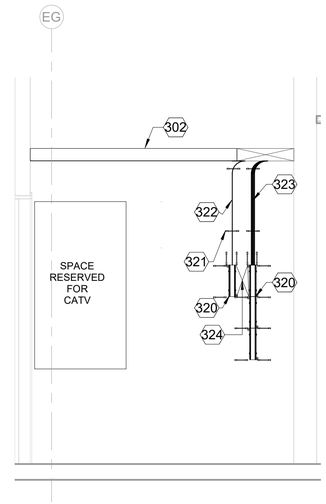

E4 BID OPTION 2 - TELECOM ROOM 104 - BACKBOARD ELEVATION

1/2" = 1'-0"

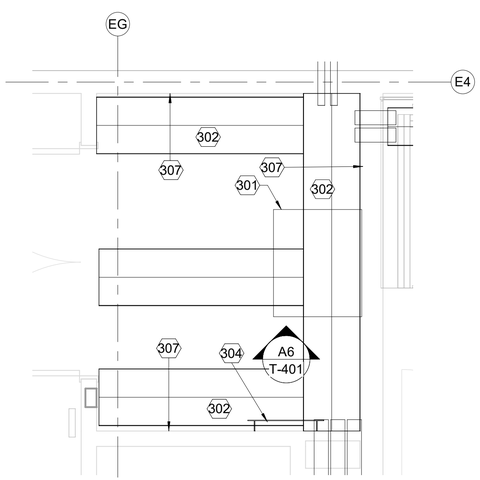

A1 TELECOM ROOM 104 - BASE BID

1/2" = 1'-0"

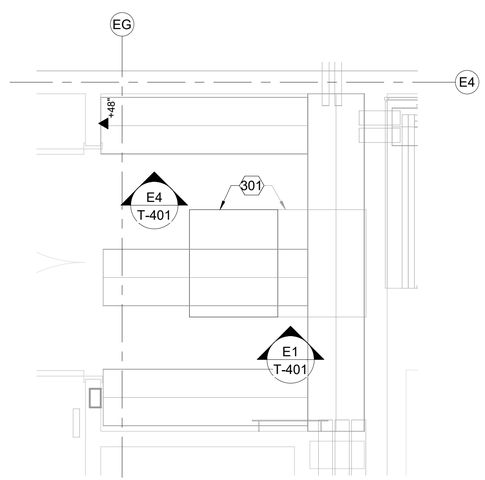

A3 TELECOM ROOM 104 - BID OPTION 2

1/2" = 1'-0"

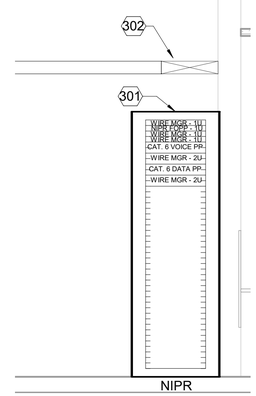

NOTE: PROVIDE NIPR CABINET, AND FIBER OPTIC CABLE BACK TO SERVER ROOM , PATCH PANELS AND WIREMANAGERS AS SHOWN.

A6 BASE BID - TELECOM ROOM 104 - CABINET ELEVATION

1/2" = 1'-0"

GENERAL NOTES - TELECOM

A	SEE SHEET T-001 FOR SYMBOLS AND GENERAL NOTES

KEYNOTES

301	PROVIDE 24"W X 34"D X 84"H DATA CABINET WITH (2) 120V 20A. 1PH. 4-WIRE PDU'S AND HORIZONTAL GROUND BAR AT REAR OF CABINET.
302	18"W X 4" D BASKET TRAY. MOUNT AT 8'-0" AFF.
304	PRIMARY BONDING BUSBAR AT 7'-6" AFF
307	3/4" X 4' X 8' FIRE TREATED PLYWOOD. MOUNT PLYWOOD ON ALL 4 WALLS 6" AFF
319	GOVERNMENT FURNISHED NETWORK EQUIPMENT
320	66 BLOCK
321	D-RING (TYP)
322	EXISTING 25 PAIR VOICE BACKBONE CABLE. RE-TERMINATE ON 66 BLOCK
323	NEW (25) CAT. 6 GREEN CABLES TO ANALOG VOICE PATCH PANEL IN NIPR CABINET. TERMINATE ONE CABLE PER PORT ON ON THE VOICEPATCH PANEL.
324	CROSS CONNECTS BY COMM SQUADRON

GRAPHIC SCALE

2 1 0 2 4

SCALE: 1/2"=1'-0"

PROJECT NORTH

PLAN NORTH

REGISTERED COMMUNICATIONS DISTRIBUTION DESIGNER
Bicsi
Stephen A Leffler
BICSI ID # 110560
EXPIRES 12-31-21
R.C.D.D.
6.24.2021

US Army Corps of Engineers ®

MARK	DESCRIPTION	DATE

DESIGNED BY: S. LEFFLER
DRAWN BY: S. LEFFLER
CHECKED BY: R. RUBIO
SUBMITTED BY: E. OLMESS
SIZE: ANSI D
ISSUE DATE: JUNE 2022
CONTRACT NO.: W912PP-22-R-0021
FILENAME: K486-923-T-401

US ARMY CORPS OF ENGINEERS
ALBUQUERQUE
ALBUQUERQUE, NEW MEXICO

JACOBS
JACOBS ENGINEERING GROUP INC.
777 Main Street
Fort Worth, TX 76102

COMBAT RESCUE HELICOPTER SIMULATOR FACILITY
KIRTLAND AIR FORCE BASE (AFB)
BERNALILLO COUNTY, NEW MEXICO

PARTIAL RENOVATION BUILDING 923
ENLARGED TELECOM PLAN

SHEET ID
923
T-401

READY TO ADVERTISE

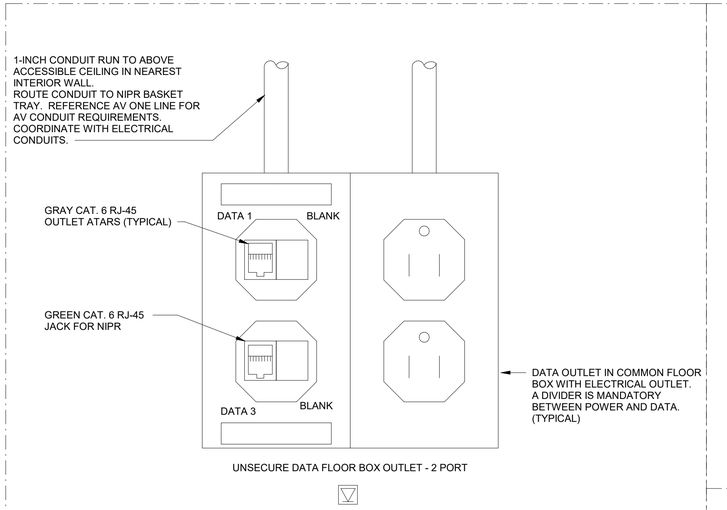

UNSECURE DATA FLOOR BOX OUTLET - 2 PORT

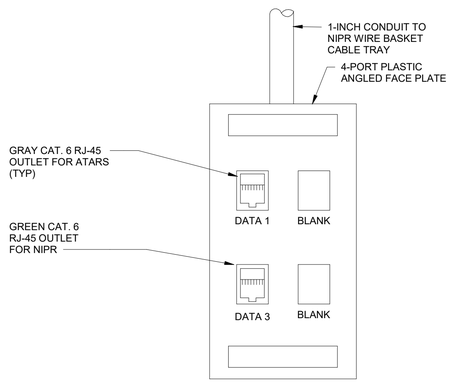

NIPR/ATARS DATA OUTLET

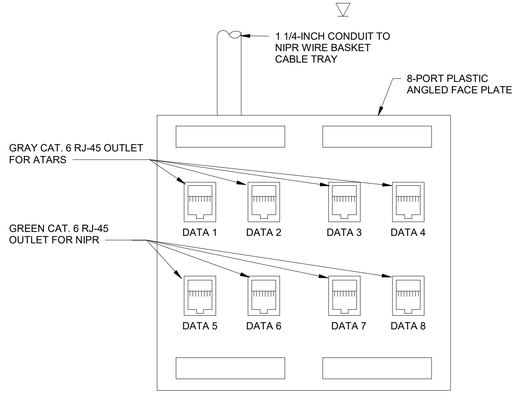

NIPR/ATARS DATA OUTLET - 4 WORKSTATIONS

4

ALL AREAS EXCEPT ADMIN

A1 DATA OUTLET DETAILS

NTS

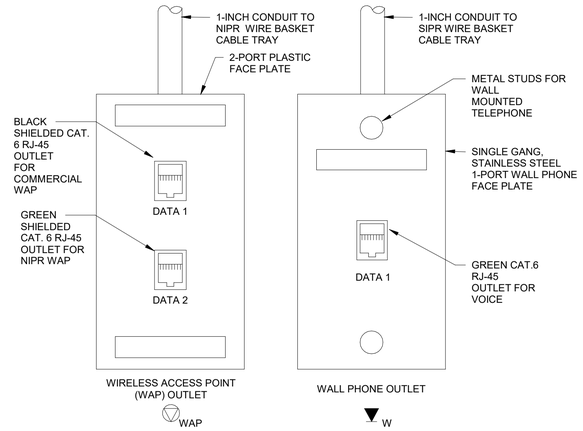

COMMON AREAS

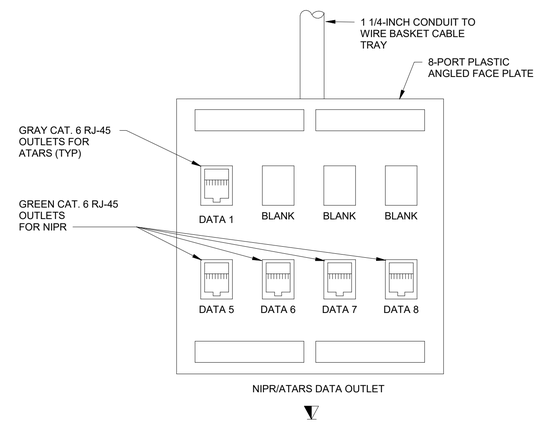

NIPR/ATARS DATA OUTLET

ADMIN AREA (COLLABORATION 106, 107)

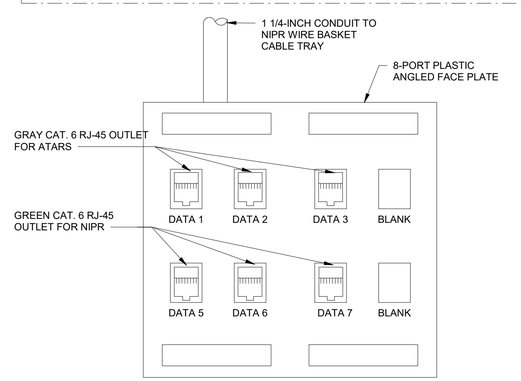

3

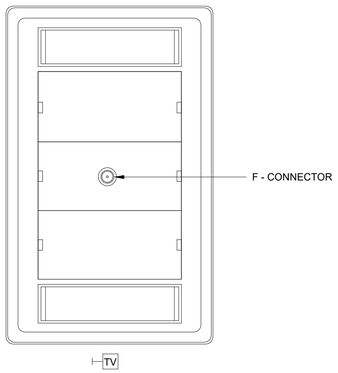

F7 CATV FACE PLATE DETAIL

NTS

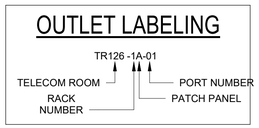

F9 TYPICAL OUTLET LABELING

NTS

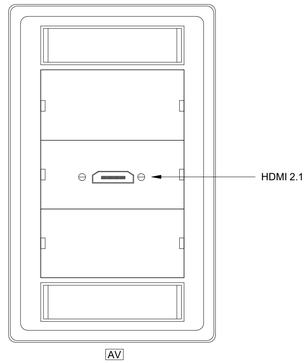

D7 AUDIO/VISUAL FACE PLATE DETAIL AT MONITOR

NTS

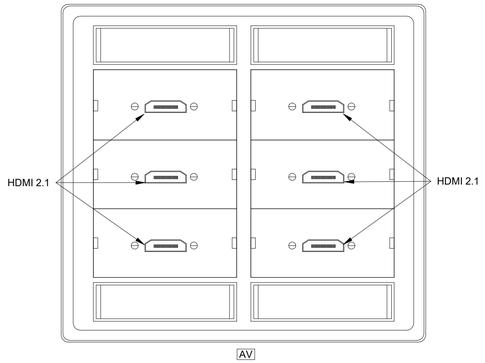

ROOM 106 ADMIN DESK

A7 AUDIO/VISUAL 2-GANG FACE PLATE DETAIL AT ADMIN DESK ROOM 106

NTS

REGISTERED COMMUNICATIONS DISTRIBUTION DESIGNER
Bicsi
Stephen A Leffler
BICSI ID # 110560
EXPIRES 12-31-21
REVIEWED
6.24.2021

US Army Corps of Engineers ®

MARK	DESCRIPTION	DATE

DESIGNED BY: S. LEFFLER
DRAWN BY: S. LEFFLER
CHECKED BY: R. RUBIO
SUBMITTED BY: E. OLMESS
SIZE: ANSI D
ISSUE DATE: JUNE 2022
CONTRACT NO.: W912PP-22-R-0021
FILENAME: K4069-923-T-501

US ARMY CORPS OF ENGINEERS
ALBUQUERQUE
ALBUQUERQUE, NEW MEXICO

JACOBS
JACOBS ENGINEERING GROUP INC.
777 Main Street
Fort Worth, TX 76102

COMBAT RESCUE HELICOPTER SIMULATOR FACILITY
KIRTLAND AIR FORCE BASE (AFB)
BERNALILLO COUNTY, NEW MEXICO

PARTIAL RENOVATION BUILDING 923
DETAILS

SHEET ID
923
T-501

READY TO ADVERTISE

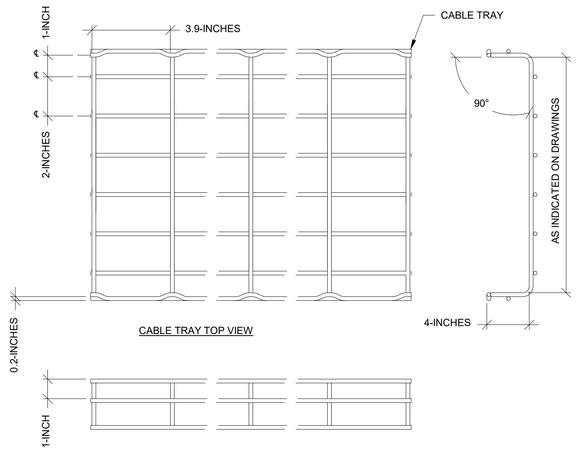

CABLE TRAY TOP VIEW

CABLE TRAY SIDE VIEW

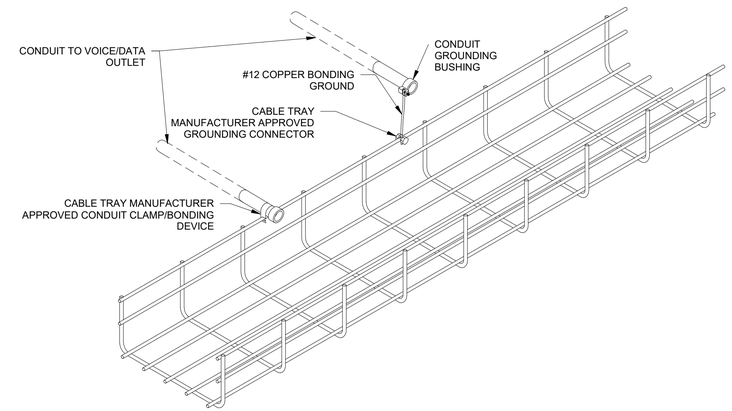

INSTALL WATERFALLS WHERE CABLES LEAVE THE TRAY IN ORDER TO PROVIDE PROPER BEND RADIUS.

E6 BASKET TYPE - CONDUIT BONDING

NTS

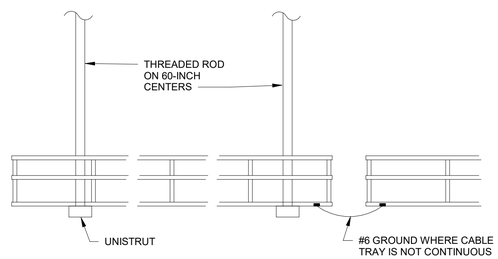

MOUNTING AND BONDING DETAIL

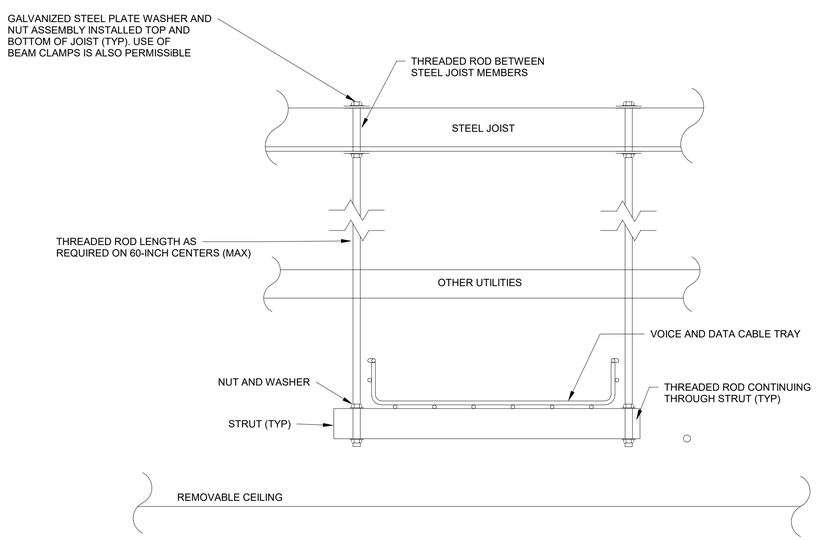

ABOVE CEILING MOUNTED CABLE TRAY

A1 TYPICAL CABLE TRAY DETAILS

NTS

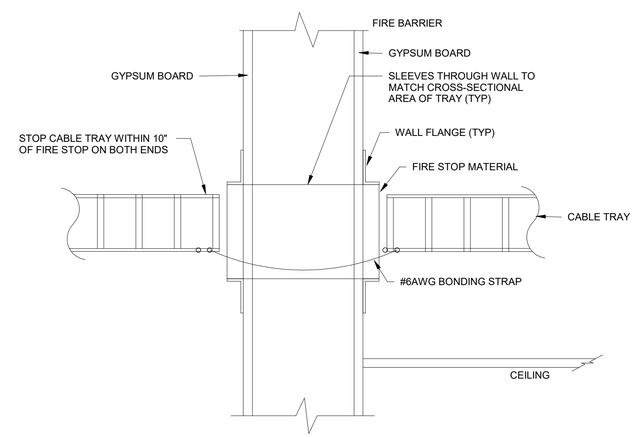

TYPICAL WHERE CABLE TRAY PENETRATES FIRE-RATED PARTITION ABOVE CEILING. BASIS OF DESIGN: EZ PATH 44+ SERIES.

A6 BASKET TRAY FIRE RATED WALL PENETRATION DETAIL

NTS

REGISTERED COMMUNICATIONS DISTRIBUTION DESIGNER
Bicsi
Stephen A Leffler
BICSI ID # 110560
EXPIRES 12-31-21
6-24-2021

READY TO ADVERTISE

US Army Corps of Engineers ®

MARK	DESCRIPTION	DATE

DESIGNED BY: S. LEFFLER
DRAWN BY: S. LEFFLER
CHECKED BY: R. RUBIO
SUBMITTED BY: E. OLMESS
SIZE: ANSI D
ISSUE DATE: JUNE 2022
CONTRACT NO.: W912PP-22-R-0021
FILENAME: K4069-923-1-502

US ARMY CORPS OF ENGINEERS
ALBUQUERQUE
ALBUQUERQUE, NEW MEXICO

JACOBS
JACOBS ENGINEERING GROUP INC.
777 Main Street
Fort Worth, TX 76102

COMBAT RESCUE HELICOPTER SIMULATOR FACILITY
KIRTLAND AIR FORCE BASE (AFB)
BERNALILLO COUNTY, NEW MEXICO

PARTIAL RENOVATION BUILDING 923

DETAILS

SHEET ID
923
T-502

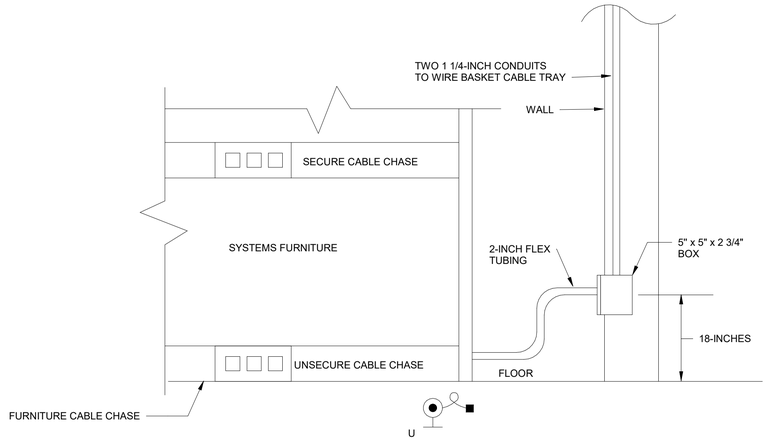

E1 UNCLASSIFIED MODULAR SYSTEMS FURNITURE OUTLET INSTALLATION

NTS

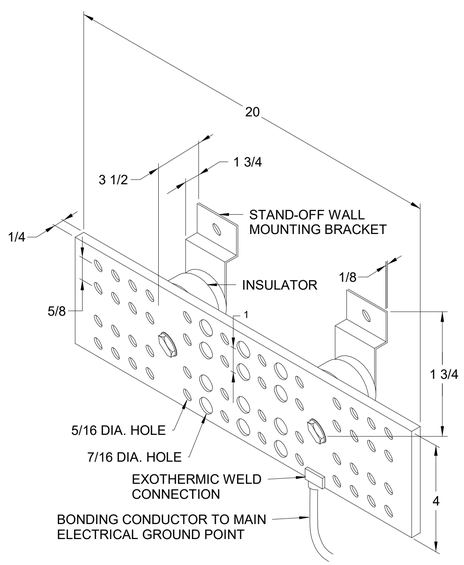

A1 TELECOMMUNICATION PRIMARY BONDING BUS BAR (PBB) DETAIL

NTS

BASKET TRAY FILL SCHEDULE				
BASKET TRAY SIZE	MAXIMUM CABLE QUANTITY AT 50%	APPROXIMATE MAXIMUM CABLE WEIGHT LBS/FT	CABLE TRAY SAFE LOAD CAPACITY LBS/FT**	NEMA CLASS
8"W X 6"D X 10'L	609	15.834	111	VE-2
12"W X 6"D X 10'L	913	23.738	124	VE-2
18"W X 6"D X 10'L	1370	35.62	128	VE-2
24"W X 6"D X 10'L	1827	47.502	154	VE-2

NOTE: CABLE QUANTITY IS BASED ON AN APPROXIMATE CABLE DIAMETER OF .224" AND A MAXIMUM CABLE TRAY FILL OF 50% (BASED ON NEC 392-9B).
CABLE WEIGHT IS BASED ON .026 POUNDS PER FOOT. UFC 3-580-01 REQUIRES MAXIMUM 25% FILL AT INSTALLATION.

** CABLE TRAY LOAD CAPACITY IS BASED ON COOPER B-LINE, FLEXTRAY WIRE BASKET TYPE SYSTEM WITH 5' SUPPORT SPAN.

E6 BASKET TRAY FILL SCHEDULE

NTS

CONDUIT FILL	
CONDUIT SIZE	MAXIMUM QUANTITY OF CABLES
1/2"	NOT USED
3/4"	NOT USED
1"	7
1 1/4"	13
1 1/2"	18
2"	29
2 1/2"	50
3"	76
3 1/2"	100
4"	127

NOTE: CABLE QUANTITIES ARE BASED ON AN OVERALL CABLE DIAMETER OF APPROXIMATELY .224" WITH ONE 90 DEGREE CONDUIT BEND."

A6 CONDUIT FILL

NTS

REGISTERED COMMUNICATIONS DISTRIBUTION DESIGNER
Bicsi
Stephen A Leffler
BICSI ID # 110560
EXPIRES 12-31-21
RCDD
6.24.2021

US Army Corps of Engineers ®

MARK	DESCRIPTION	DATE

DESIGNED BY: S. LEFFLER
DRAWN BY: S. LEFFLER
CHECKED BY: R. RUBIO
SUBMITTED BY: E. OLMESS
SIZE: ANSI D
ISSUE DATE: JUNE 2022
CONTRACT NO.: W912PP-22-R-0021
FILENAME: K4069-923-1-503

US ARMY CORPS OF ENGINEERS
ALBUQUERQUE
ALBUQUERQUE, NEW MEXICO

JACOBS
JACOBS ENGINEERING GROUP INC.
777 Main Street
Fort Worth, TX 76102

COMBAT RESCUE HELICOPTER SIMULATOR FACILITY
KIRTLAND AIR FORCE BASE (AFB)
BERNALILLO COUNTY, NEW MEXICO
PARTIAL RENOVATION BUILDING 923
DETAILS

SHEET ID
923
T-503

READY TO ADVERTISE

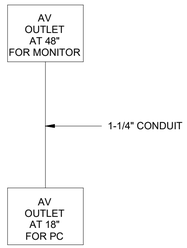

F1 COLLABORATION ROOM AV
NTS

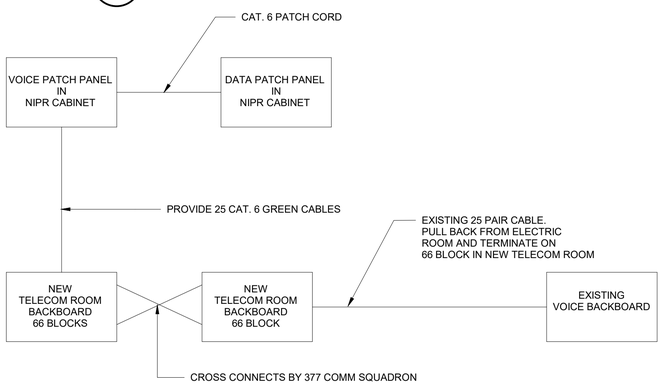

BID OPTION 2 OR 8 - COPPER BACKBONE ONE-LINE DIAGRAM

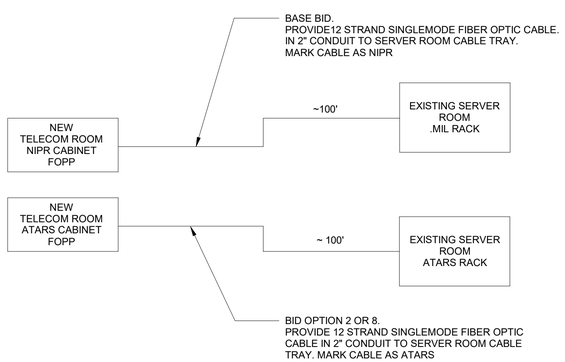

NOTE: CONTRACTOR TO FURNISH AND INSTALL SEPARATE 1U FIBER OPTIC PATCH PANELS AT BOTH ENDS OF EACH FIBER OPTIC CABLE. TERMINATE CABLES WITH DUPLEX LC CONNECTORS. CONTRACTOR TO VERIFY DISTANCES PRIOR TO PURCHASE AND INSTALLATION OF MATERIALS.

FIBER OPTIC BACKBONE ONE-LINE DIAGRAM

A1 TELECOM COPPER AND FIBER OPTIC ONE-LINE DIAGRAMS
NTS

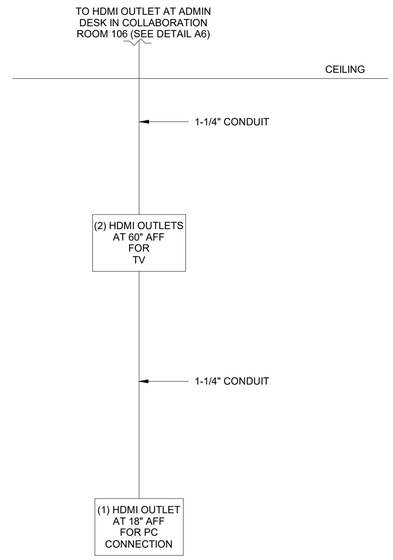

4 PERSON TABLE

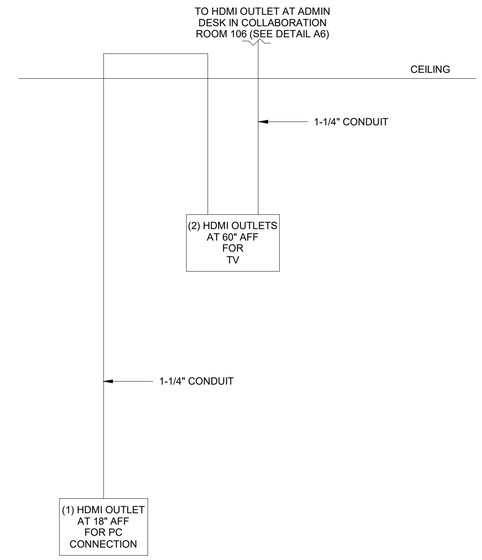

8 PERSON TABLE

D4 INFORMAL WORK ROOM 4 AND 8-PERSON TABLE - AV ONE-LINE DIAGRAM
NTS

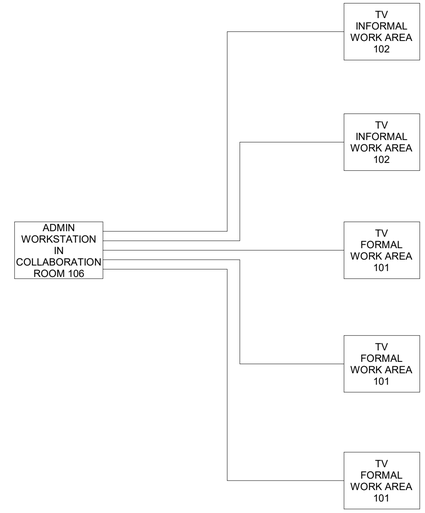

A4 FORMAL AND INFORMAL WORK AREAS AV CONNECTION
NTS

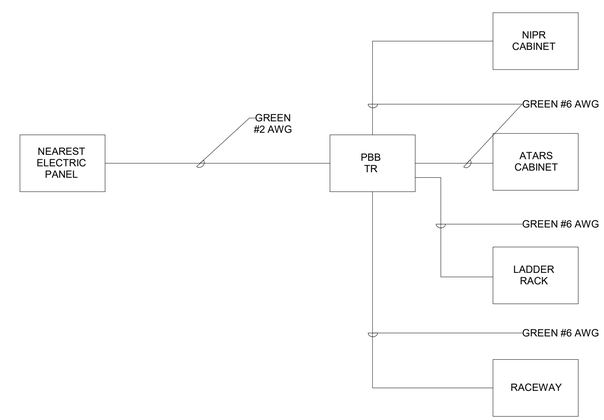

NOTE: BOND ALL TELECOMMUNICATIONS CONDUITS WITH GREEN #12 AWG AND SLEEVES TO BASKET TRAYS WITH GREEN #6 AWG

A8 TELECOM GROUNDING ONE-LINE DIAGRAM
NTS

REGISTERED COMMUNICATIONS DISTRIBUTION DESIGNER
Bicsi
Stephen A Leffler
BICSI ID # 110560
EXPIRES 12-31-21
RCDD
6.24.2021

US Army Corps of Engineers ®

MARK	DESCRIPTION	DATE

DESIGNED BY: S. LEFFLER
DRAWN BY: S. LEFFLER
CHECKED BY: R. RUBIO
SUBMITTED BY: E. OLMESS
SIZE: ANSI D
ISSUE DATE: JUNE 2022
CONTRACT NO.: W912PP-22-R-0021
FILENAME: K486923-1-701

US ARMY CORPS OF ENGINEERS
ALBUQUERQUE
ALBUQUERQUE, NEW MEXICO

JACOBS®
JACOBS ENGINEERING GROUP INC.
777 Main Street
Fort Worth, Texas 76102

COMBAT RESCUE HELICOPTER SIMULATOR FACILITY
KIRTLAND AIR FORCE BASE (AFB)
BERNALILLO COUNTY, NEW MEXICO

PARTIAL RENOVATION BUILDING 923
ONE-LINE DIAGRAM

SHEET ID
923
T-601

READY TO ADVERTISE