WHITERIVER INDIAN HOSPITAL

INDIAN HEALTH SERVICE - PHX AREA OFFICE

200 WEST HOSPITAL DRIVE, WHITERIVER, AZ 85941

ADMINISTRATION OFFICE BUILDING

IHS Contract No: HHSI1022018000007I
IHS Project: PH15WR02H8

Issue Date: November 3, 2022

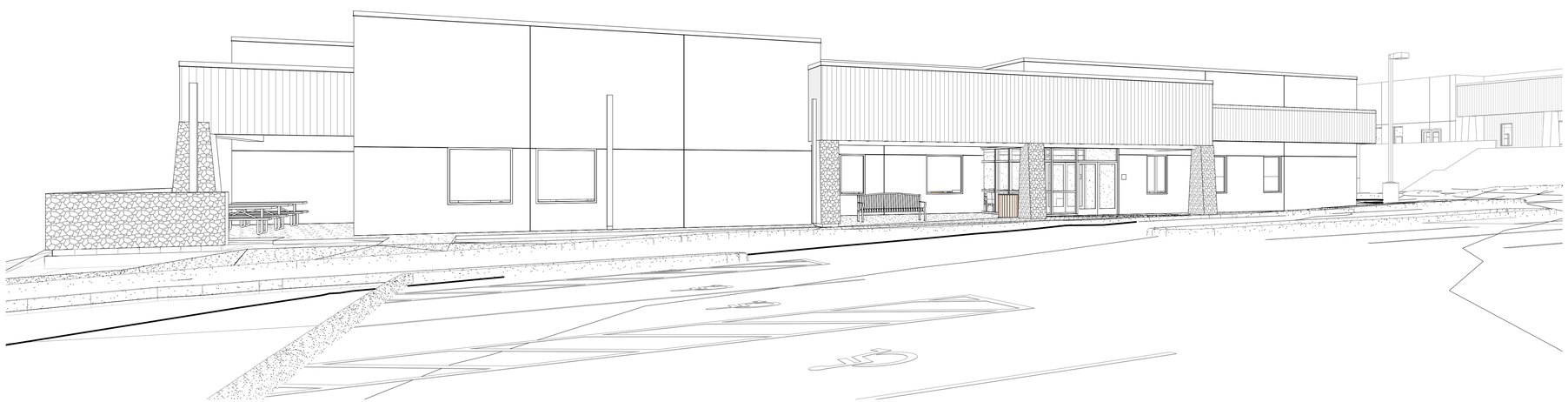

DEFERRED SUBMITTAL ITEMS:

1. SHOP-FABRICATED WOOD TRUSSES
2. HVAC POWER VENTILATORS UNIT HANGERS AND SUPPORTS
3. WET-PIPE SPRINKLER SYSTEM
4. HANGERS AND SUPPORTS FOR PLUMBING PIPING AND EQUIPMENT
5. DIGITAL, ADDRESSABLE FIRE-ALARM SYSTEM

FINAL CONSTRUCTION DOCUMENT PACKAGE

JSRa
JOHNSON SMITTHIPONG & ROSAMOND ASSOCIATES, INC.
5210 E Williams Cir • Ste 600 • Tucson, AZ 85711
(520) 547-7904 • www.jsrarchinc.com

Consultants:

REGISTERED ARCHITECT
CERTIFICATE NO 9793
VERNON ROSAMOND
Date Signed 11/3/22
ARIZONA, U.S.A.

WHITERIVER ADMINISTRATION OFFICE BUILDING

200 W HOSPITAL DR
WHITERIVER, AZ 85941

HHSI1022018000007I

U. S. DEPARTMENT OF HEALTH AND HUMAN SERVICES
INDIAN HEALTH SERVICE
PHOENIX AREA OFFICE

No.	Date	Description

Issue Date:	11/3/2022
Project No:	21-020
Scale:	
Drawn By:	SP
Checked By:	BD

FINAL CD

Sheet Title:

COVER SHEET

Sheet Number:

G000

Autodesk Docs://21-020 Whiteriver Admin v2022/21-020 06 Arch WR Admin 2022.rvt
11/3/2022 2:34:05 PM

ABBREVIATIONS

BLK(G) BLOCK(ING)
BM BENCH MARK
BO BOTTOM OF
BOT BOTTOM
BRG BEARING
BRK BRICK
BSMT BASEMENT
BUR BUILT UP ROOFING

C CHANNEL
C/C CENTER TO CENTER
CAB CABINET
CB CHALK BOARD,CATCH BASIN
CEM CEMENT
CG CORNER GUARD
CI CAST IRON
CIP CAST IN PLACE
CJ CONTROL JOINT
CLG CEILING
CLR CLEAR(ANCE)
CMP CORRUGATED METAL PIPE
CMTS COMMENTS
CMU CONCRETE MASONRY UNIT
CO CLEAN OUT
COL COLUMN
COMB COMBINATION
CONC CONCRETE
CONN CONNECTION
CONST CONSTRUCTION
CONT CONTINUOUS OR CONTINUE
CORR CORRIDOR,CORRUGATED
CPT CARPET
CR CLEAN ROOM
CSK COUNTERSINK
CT CERAMIC TILE
CU CUBIC
CU FT CUBIC FOOT (FEET)
CW COLD WATER

D DEPTH
DEMO DEMOLISH, DEMOLITION
DF DRINKING FOUNTAIN
DIA DIAMETER
DIAG DIAGONAL
DIM DIMENSION
DISP DISPENSER
DN DOWN
DO DITTO
DP DAMPPROOFING
DR DOOR
DS DOWNSPOUT
DTL DETAIL
DWG DRAWING
DWC DRYWALL CHANNELS (HAT)

E EAST
EA EACH
EF EACH FACE
EJ EXPANSION JOINT
ELEC ELECTRIC(AL)
ELEV ELEVATION,ELEVATOR
EMER EMERGENCY
EP EPOXY PAINT
EPS EXPANDED POLYSTYRENE
EQ EQUAL EQUIP EQUIPMENT
ES EXPOSED STRUCTURE
EST ESTIMATE
EW EACH WAY
EWC ELECTRIC WATER COOLER
EXC EXCAVAT(E)(ION)
EXH EXHAUST
EXIST EXISTING
EXP EXPANSION, EXPOSED
EXT EXTERIOR
EIFS EXT. INSULATION FINISH SYSTEM

F FAHRENHEIT
FA FIRE ALARM
FAB FABRICATE
FD FLOOR DRAIN
FDN FOUNDATION
FE(C) FIRE EXTINGUISHER(CABINET)
FF FINISH FLOOR
FHC FIREHOSE CABINET
FHR FIREHOSE RACK
FIN FINSH(ED)
FL FLOOR
FLA FLASHING
FLEX FLEXIBLE
FLUOR FLUORESCENT
FO FACE OF
FP FIREPROOF
FR FIRE RETARDANT
FRP FIBER REINFORCED PLASTIC
FT FOOT,FEET
FTG FOOTING
FUR FURRED(ING)
FUT FUTURE

GA GAGE,(GUAGE)
GALV GALVANIZED
GC GENERAL CONTRACT(OR)
GD GRADE
GL GLASS, GLAZING
GWB GYPSUM WALLBOARD
GYP GYPSUM
H(T) HEIGHT
HB HOSE BIBB
HC HOLLOW CORE
HDBD HARDBOARD
HD HEAVY DUTY
HDWD HARDWOOD
HDWR HARDWARE
HM HOLLOW METAL
HORZ HORIZONTAL
HP HIGH POINT
HR HOUR
HVAC HEATING/VENTILATING/ AIR CONDITIONING
HW HOT WATER

ID INSIDE DIAMETER
IE INVERT ELEVATION
IN INCH(ES)
INCL INCLUDING
INSUL INSULATION
INT INTERIOR

JC JANITORS CLOSET
JST JOIST
JT JOINT

KD KNOCKED DOWN
KIT KITCHEN
KO KNOCK OUT
KP KICK PLATE

L LENGTH,LONG
LAB LABORATORY
LAM LAMINATE
LAV LAVATORY
LF LINEAL FEET
LH LEFT HAND
LL LIVE LOAD
LLH LONG LEG HORIZONTAL
LLV LONG LEG VERTICAL
LP LOW POINT
LT LIGHT
LTWT LIGHTWEIGHT
LVR LOUVER

MAS MASONRY
MAX MAXIMUM
MATL MATERIAL
MED MEDIUM
MECH MECHANICAL
MET METAL
MEZZ MEZZANINE
MFR MANUFACTURER
MH MANHOLE
MM MILLIMETER
MIN MINIMUM
MISC MISCELLANOUS
MO MASONRY OPENING
MOD MODULAR
MOV MOVABLE
MTD MOUNTED
MWP METAL WALL PANEL (SYSTEM)

N NORTH
NA NOT APPLICABLE
NIC NOT IN CONTRACT
NOM NOMINAL
NRC NOISE REDUCTION COEFFICIENTS
NTS NOT TO SCALE
NO NUMBER

OA OVERALL
OC ON CENTER(S)
OD OUTSIDE DIAMETER
OFF OFFICE
OH OVERHEAD,OPPOSITE HAND
OPG OPENING
OPP OPPOSITE
ORD OVERFLOW ROOF DRAIN

P PAINT(ED)
PAR PARALLEL
PART PARTITION
PART BD PARTICLE BOARD
PC PIECE
PCC PRECAST CONCRETE
PCF POUNDS PER CUBIC FOOT
PREFAB PERFORATE(D)
PERIM PERIMETER
PERP PERPENDICULAR
PF PREFABRICATED
PJ PANEL JOINT
PL PLASTER,PLATE,PROPERTY LINE
PLBG PLUMBING
PLAM PLASTIC LAMINATE
PLF POUNDS PER LINEAL FOOT
PNL PANEL
PO POWER OPERATED
PR PAIR
PSF POUNDS PER SQUARE FOOT
PSI POUNDS PER SQUARE INCH
PT POINT
PTD PAPER TOWEL DISPENSER
PTR PAPER TOWEL RECEPTOR
PVC POLYVINYL CHLORIDE
PVMT PAVEMENT
PLWD PLYWOOD

QT QUARRY TILE
QTR QUARTER
QTY QUANTITY

(R) RECESSED
R RADIUS,RISER ROUND
RA RETURN AIR
RB RESILIENT BASE
RCP REINFORCED CONCRETE PIPE, REFLECTED CEILING PLAN
RD ROOF DRAIN
RE(F) REFERENCE
RELO RELOCATION
REPL REPLACE
RES RESILIENT
REV REVISION(S),REVISED
RF RIGID FIBERGLASS
RFG ROOFING
RH RIGHT HAND
RM ROOM
RO ROUGH OPENING
ROW RIGHT OF WAY
RRF ROLLED RUBBER FLOORING
REQ'D REQUIRED
RWL RAINWATER LEADER

S SEALED, SOUTH
(S) SURFACE MOUNTED
SC SOLID CORE, SEALED CONCRETE
SCHED SCHEDULE
SECT SECTION
SD STORM DRAIN
SDG SIDING
SF SQUARE FEET
SHT SHEET
SHWR SHOWER
SIM SIMILAR
SL SHEET LINOLEUM
SM SHEET METAL
SP SOUNDPROOF
SPECS SPECIFICATIONS
SPKR SPEAKER
SPL SPECIAL
SQ SQUARE
SS SERVICE SINK
SST STAINLESS STEEL
STD STANDARD ST STEEL, STREET
STOR STORAGE
STRUC STRUCTURAL
SUSP SUSPENDED
SV SEAMLESS VINYL
SW SWITCH
SWR SEWER
SYM SYMMETRY(ICAL)

T THICKNESS, TEE
TD TRENCH DRAIN
T&G TONGUE AND GROOVE
TB TACKBOARD TEL TELEPHONE
TEMP TEMPERATURE,TEMPORARY
TERR TERRAZZO
THK THICK(NESS)
TO TOP OF
TOC TOP OF CONCRETE
TOIL TOILET
TOP TOP OF PARAPET
TOS TOP OF STEEL
TOW TOP OF WALL
TPD TOILET PAPER DISPENSER
TV TELEVISION
TYP TYPICAL

U URINAL
UG UNDERGROUND
UL UNDERWRITERS LABORATORY
UNF UNFINISHED
UNO UNLESS NOTED OTHERWISE

VB VAPOR BARRIER
VCT VINYL COMPOSITION TILE
VERT VERTICAL
VNR VENEER
VPL VENEER PLASTER
VIF VERIFY IN FIELD
VWC VINYL WALL COVERING

W WIDTH, WIDE, WEST
W/ WITH
W/O WITHOUT
W/W WALL TO WALL
WC WATER CLOSET
WD WOOD
WDW WINDOW
WH WALL HUNG, WATER HEATER
WI WROUGHT IRON
WM WIRE MESH
WP WATERPROOFING
WR WATER REPELLENT
WS WEATHERSTRIP
WSCT WAINSCOT
WT WEIGHT
WWF WELDED WIRE FABRIC

YD YARD

PROJECT DIRECTORY

OWNER
INDIAN HEALTH SERVICE
DIVISION OF FACILITIES ENGINEERING
- PHOENIX AREA
TWO RENAISSANCE SQUARE
40 N. CENTRAL AVE., SUITE 720
PHOENIX, AZ 85004
CONTACT: VERNON CLASHIN
PHONE: (602) 364-5062

CIVIL ENGINEER
DOWL ENGINEERS
430 W. WARNER ROAD
TEMPE, AZ 85284
CONTACT: ERIN O'BRIEN
PHONE: (480) 753-0800

STRUCTURAL ENGINEER
SCHNEIDER STRUCTURAL ENGINEERS, INC
435 E. 9TH ST.
TUCSON, AZ 85705
CONTACT: RON SCHNEIDER
PHONE: (520) 512-8183

ARCHITECT
JOHNSON SMITTHIPONG & ROSAMOND
5120 E. WILLIAMS CIR, SUITE 600
TUCSON, AZ 85711
CONTACT: BILL DRAPER
PHONE: (520) 547-7904

ELECTRICAL/MECHANICAL ENGINEERING
TME/BERNARD
2990 N SWAN RD., SUITE 227
TUCSON, AZ 85712
CONTACT: JACOB CLARK
PHONE: (520) 323-2381

INTERIOR DESIGN
AVIAR DESIGN
7650 E. BROADWAY BLVD, SUITE 212
TUCSON, AZ 85710
CONTACT: KATHRYN VICKERS
PHONE: (520) 216-5509

CODE DATA & STANDARDS

INTERNATIONAL BUILDING CODE 2018

OCCUPANCY B
CONSTRUCTION TYPE VB
SEISMIC ZONE REFER TO STRUCTURAL
SPRINKLERS FULLY SPRINKLERED

2018 INTERNATIONAL BUILDING CODE
2018 INTERNATIONAL PLUMBING CODE
2018 INTERNATIONAL MECHANICAL CODE
2017 NATIONAL ELECTRICAL CODE
2018 INTERNATIONAL ENERGY CONSERVATION CODE
2019 A/E DESIGN GUIDE
2010 ADA STANDARDS FOR ACCESSIBLE DESIGN
2018 INTERNATIONAL FIRE CODE
2018 NFPA 101 - LIFE SAFETY CODE
2019 NFPA 72
2019 NFPA 13

2018 IECC SUMMARY: TABLE C402.1.2 - CLIMATE ZONE 5
INSULATON ENTIRELY ABOVE ROOF DECK: R-30ci rigid insulation
WOOD FRAME WALL: R-18 wall cavity + R-3.8ci rigid insulation
SLAB ON GRADE: R-10 for 24" below; vertical & horizontal combined

GENERAL ARCHITECTURAL NOTES

1. ALL DIMENSIONS GIVEN ARE TO FACE OF STUD AND TO FACE OF STEM WALL. EXCEPTIONS AS INDICATED ON THE DOCUMENTS.
2. LARGE SCALE DETAILS AND PLANS TAKE PRECEDENCE OVER SMALL SCALE DRAWINGS.
3. CIVIL DRAWINGS FINISH FLOOR DATUM ELEVATION EQUALS ARCHITECTURAL ELEVATION OF 0'=0" FOR EACH BUILDING INDEPENDANT OF OTHER BUILDINGS.
4. COORDINATE AND VERIFY ALL DIMENSIONS, OPENINGS AND CONDITIONS WITH CIVIL, STRUCTURAL, MECHANICAL, ELECTRICAL AND ALL OTHER PERTINENT DRAWINGS AND TRADES PRIOR TO CONSTRUCTION. NOTIFY ARCHITECT OF DISCREPANCIES PRIOR TO FABRICATION AND INSTALLATION.
5. FIRE RATINGS SHALL BE MAINTAINED AT FIRE RATED PARTITIONS BY A U.L. ASSEMBLY AT GAPS AND VOIDS CREATED BY PENETRATIONS, STRUCTURAL MEMBERS AND INTERSECTIONS WITH ADJACENT SURFACES.
6. ALL WORK SHALL BE PERFORMED IN ACCORDANCE WITH APPLICABLE CODES AND REGULATIONS.

PROJECT LOCATION

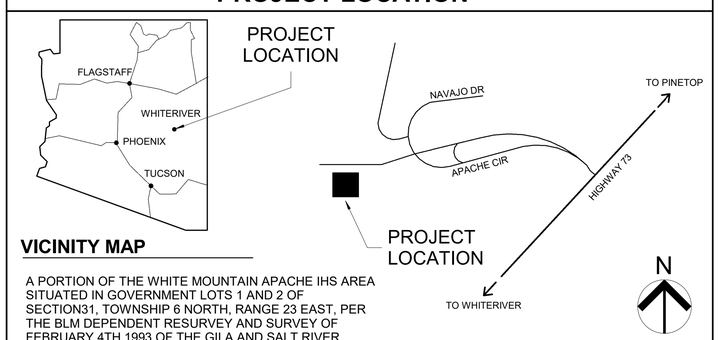

VICINITY MAP

A PORTION OF THE WHITE MOUNTAIN APACHE IHS AREA SITUATED IN GOVERNMENT LOTS 1 AND 2 OF SECTION31, TOWNSHIP 6 NORTH, RANGE 23 EAST, PER THE BLM DEPENDENT RESURVEY AND SURVEY OF FEBRUARY 4TH 1993 OF THE GILA AND SALT RIVER MERIDIAN, NAVAJO COUNTY, ARIZONA

SHEET INDEX

Sht No	Sheet Name
GENERAL	
G000	COVER SHEET
G001	INFORMATION SHEET
G101	CODE SHEET
CIVIL	
C001	COVER SHEET
C002	NOTES SHEET
C100	DEMOLITION PLAN
C200	SITE PLAN
C300	GRADING & DRAINAGE PLAN
C400	SANITARY SEWER PLAN & PROFILE
C401	WATER PLAN
C500	DETAILS
C501	DETAILS
C502	MAG STANDARD DETAILS
C503	MAG STANDARD DETAILS
C504	MAG AND CITY OF PHOENIX DETAILS
C600	STORMWATER MANAGEMENT PLAN COVER
C601	STORMWATER MANAGMENT PLAN DETAILS
C602	STORMWATER MANAGMENT PLAN
STRUCTURAL	
S101	G.S.N.
S102	G.S.N. & I.O.D.
S103	SPECIAL INSPECTIONS CHART
S104	TYPICAL DETAILS
S105	TYPICAL DETAILS
S106	TYPICAL DETAILS
S107	SCHEDULES
S201	FOUNDATION PLAN
S202	ROOF FRAMING PLAN
S203	TRAILER FOUNDATION PLAN
S301	FOUNDATION DETAILS
S401	FRAMING DETAILS
S402	FRAMING DETAILS
S403	FRAMING DETAILS
ARCHITECTURAL	
A001	WALL TYPES & MOUNTING HEIGHTS
A101	SITE PLAN EXISTING
A102	REFERENCE SITE PLAN NEW
A121	FLOOR PLAN
A131	DIMENSION PLAN
A141	REFLECTED CEILING PLAN
A151	ROOF PLAN
A201	EXTERIOR ELEVATIONS
A202	INTERIOR ELEVATIONS
A301	BUILDING SECTIONS
A401	ENLARGED PLANS
A501	EXTERIOR DETAILS
A502	INTERIOR DETAILS
A503	MILLWORK DETAILS
A504	DOOR DETAILS
A505	WINDOW DETAILS
A601	ROOM FINISH SCHEDULES
A602	DOOR & WINDOW SCHEDULE
A603	SIGNAGE FLOOR PLAN
A604	SIGNAGE SCHEDULE
INTERIORS	
I001	FURNITURE PLAN
I002	MODULAR FURNITURE ELECTRICAL PLAN
I003	PANEL PLAN
FIRE PROTECTION	
F001	GENERAL NOTES - FIRE PROTECTION
F101	FIRST FLOOR PLAN -FIRE PROTECTION
F501	DETAILS - FIRE PROTECTION
F502	DETAILS - FIRE PROTECTION

SHEET INDEX

Sht No	Sheet Name
PLUMBING	
P001	LEGENDS, DETAILS AND SCHEDULES - PLUMBING
P101	PLUMBING SITE PLAN
P121	FIRST FLOOR PLAN - PLUMBING DOMESTIC
P131	FIRST FLOOR PLAN - PLUMBING SANITARY
P501	RISERS - PLUMBING
MECHANICAL	
M001	GENERAL NOTES & LEGEND
M111	FIRST FLOOR PLAN - HVAC DUCTWORK
M112	FIRST FLOOR PLAN - HVAC ZONES
M113	ROOF HVAC PLAN
M601	SCHEDULES - HVAC
ELECTRICAL	
E001	SCHEDULES, LEGENDS & GENERAL NOTES
E002	EQUIPMENT CONNECTION SCHEDULES
E101	SITE PLAN - DEMOLITION
E102	SITE PLAN
E103	SITE PLAN - SSB BUILDING
E121	LIGHTING PLAN
E131	POWER PLAN - NORTH
E132	POWER PLAN - SOUTH
E141	MECHANICAL POWER PLAN
E142	ROOF POWER PLAN
E151	FIRE ALARM PLAN
E161	SYSTEMS PLAN
E401	ENLARGED PLANS
E601	PANEL SCHEDULES
E602	PANEL SCHEDULES
E701	ONE-LINE DIAGRAM

JSRa
JOHNSON SMITTHIPONG & ROSAMOND ASSOCIATES, INC.
5210 E Williams Cir • Ste 600 • Tucson, AZ 85711
(520) 547-7904 • www.jsrarchinc.com

Consultants:

REGISTERED ARCHITECT
CERTIFICATE NO. 9793
VERNON ROSAMOND
Date Signed 11/03/22
ARIZONA, U.S.A.

WHITERIVER ADMINISTRATION OFFICE BUILDING

200 W HOSPITAL DR
WHITERIVER, AZ 85941

HHSI102201800007I

U. S. DEPARTMENT OF HEALTH AND HUMAN SERVICES
INDIAN HEALTH SERVICE
PHOENIX AREA OFFICE

No.	Date	Description

Issue Date:	11/3/2022
Project No:	21-020
Scale:	12" = 1'-0"
Drawn By:	SP
Checked By:	BD

FINAL CD

Sheet Title:

INFORMATION SHEET

Sheet Number:

G001

Autodesk Docs://21-020 Whiteriver Admin v2022/21-020_06 Arch WR Admin 2022.rvt
11/3/2022 3:46:42 PM

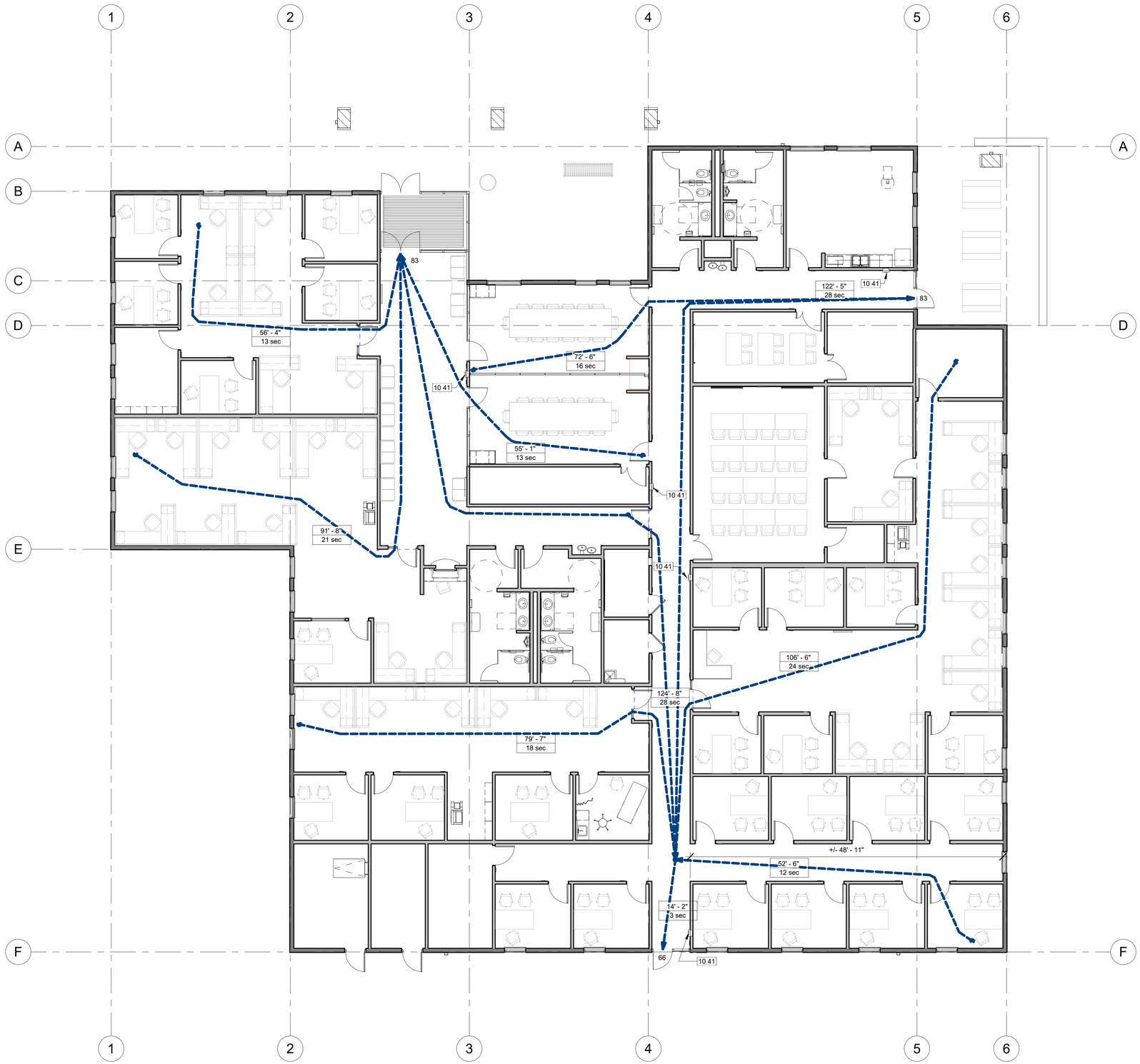

A1 CODE FLOOR PLAN
1/8" = 1'-0"

BUILDING OCCUPANCY CLASSIFICATION SUMMARY:
NFPA 101 - Life Safety Code

a. Occupancy: New **Business** (Chapter 38) NOTE: Conference Spaces are less than 50 occupants and Assembly will not apply.
b. Multiple Occupancy (6.1.14) N/A
c. Most Restrictive Occupancy requirements in each building is utilized. (6.1.14.3.2) N/A
d. Construction Type: Construction Type V (000) (8.2.1.2 ref NFPA 220 Chapter 11)
e. Height and Area Limitations (IBC Chapter 5): Business 60 feet and 36,000 SF.
   1. Actual Area: 14,557 SF

f. Means of Egress:
   1. Components (38.2.2)- Doors 101A, 135A, 135B and 136A have card access and are part of the Means of Egress by being "fail-safe" where the doors unlock in direction of egress during fire alarm activation.
   2. Occupant Loads (Table 7.3.1.2)
      A. Business 14,186 SF / 100 = 142 occupants
      B. Mechanical 371 SF /500 = 1 occupant
   3. Load and Capacity (7.3.1) 143 occ x .2= 29 inches
   4. Number of Exits: 2 Required, 3 Provided (38.2.4)
   5. Dead-end Corridors: 50 feet (38.2.5.2.1)
   6. Common Path of Travel: 100 feet (38.2.5.3.1)
   7. Travel Discharge to Exits: 300 feet (38.2.6.3)
   8. Exit Discharge: Exiting is directly to the outside to the finished ground level to a public way protected from the building. (7.7)

g. Protection of Vertical Openings: N/A
h. Protection of Hazardous Areas: Ordinary Hazard Classification (38.1.5)
i. Interior Finishes: Class A, B, or C <300 occupants. (10.2).
j. Fire and Smoke Detection, Alarm, and Notification: Provided
k. Automatic Sprinkler Systems: Provided per NFPA 13
l. Corridor Construction: Interior corridors protection not required if sprinklered.
m. Corridor Construction: Corridor Width: 44 inches serving 50 or more persons. (38.2.3.2).
n. Smoke Compartments and Smoke Barriers: N/A
o. Fire Resistant Rated Separations: N/A
p. Suites: N/A

KEYNOTES	
Key #	Keynote Text
10 41	SEMI-RECESSED FIRE EXTINGUISHER CABINET.

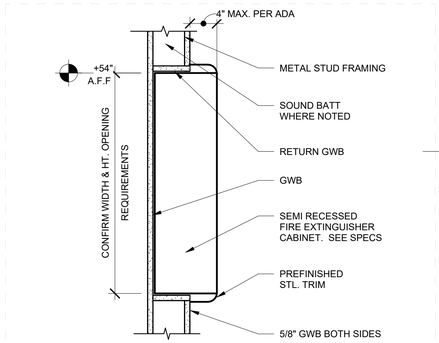

B1 SEMI-RECESSED FIRE CAB.
1 1/2" = 1'-0"

LEGEND

- 48 OCCUPANCY @ EXIT
- EGRESS START (OR OPTION)
- EGRESS PATH
- EGRESS DIRECTION
- EGRESS DISTANCE & TRAVEL TIME
- 1 HOUR RATED WALL
- 2 HOUR RATED WALL
- SMOKE BARRIER

JSRa
JOHNSON SMITTHIPONG & ROSAMOND ASSOCIATES, INC.
5210 E Williams Cir • Ste 600 • Tucson, AZ 85711
(520) 547-7904 • www.jsrarchinc.com

Consultants:

REGISTERED ARCHITECT CERTIFICATE NO 9793 VERNON ROSAMOND Date Signed 11/3/22 ARIZONA, U.S.A.

WHITERIVER ADMINISTRATION OFFICE BUILDING

200 W HOSPITAL DR
WHITERIVER, AZ 85941

HHSI1022018800007I

U. S. DEPARTMENT OF HEALTH AND HUMAN SERVICES
INDIAN HEALTH SERVICE
PHOENIX AREA OFFICE

No.	Date	Description

Issue Date:	11/3/2022
Project No:	21-020
Scale:	As indicated
Drawn By:	dh
Checked By:	BD

FINAL CD

Sheet Title:
CODE SHEET

Sheet Number:
G101

Autodesk Docs://21-020 Whiteriver Admin v2022/21-020 06 Arch WR Admin 2022.rvt
11/3/2022 2:34:10 PM

CIVIL IMPROVEMENT PLANS FOR
WHITERIVER ADMINISTRATION OFFICE BUILDING
200 W. HOSPITAL DRIVE
WHITERIVER, ARIZONA 85941

LEGEND

FEATURE	PROPOSED	EXISTING
FOUND SURVEY MONUMENT IN HANDHOLE		
SET REBAR OR MAG NAIL		
FOUND CONTROL MONUMENT		
PROPERTY LINE		
RIGHT-OF-WAY LINE		
EASEMENT LINE		
CENTERLINE		
SECTION LINE		
BUILDING SETBACK		
MINOR CONTOUR LINE	41	41
MAJOR CONTOUR LINE	40	40
AC PAVEMENT		
CURB		
CONCRETE SIDEWALK OR PAD		
BUILDING EXTERIOR WALL		
BUILDING OVERHANG		
SITE WALL		
STORM DRAIN		
SD CATCH BASIN		
MANHOLE, STORM DRAIN		
GAS LINE		G
UNDERGROUND ELECTRIC LINE		E
OVERHEAD ELECTRIC LINE		OE
TRAFFIC SIGN, SINGLE POST		
TRAFFIC SIGNAL (W/O W/MAST ARM)		
SITE LIGHT		
ELECTRIC JUNCTION BOX		J
COMMUNICATIONS PEDESTAL		C
POWER POLE		
SANITARY SEWER		S
MANHOLE, SANITARY SEWER		
CLEAN OUT		C.O.
ELECTRIC TRANS., PAD MOUNTED		
WATER LINE		W
WATER VALVE		
FIRE DEPARTMENT CONNECTION		
WATER METER		W
BACK FLOW PREVENTER		
RIP RAP		
SWALES		
SLOPE ARROW		
GRADE POINT	XX.XXFG	(XX.XXEG)
GAS EQUIPMENT		G

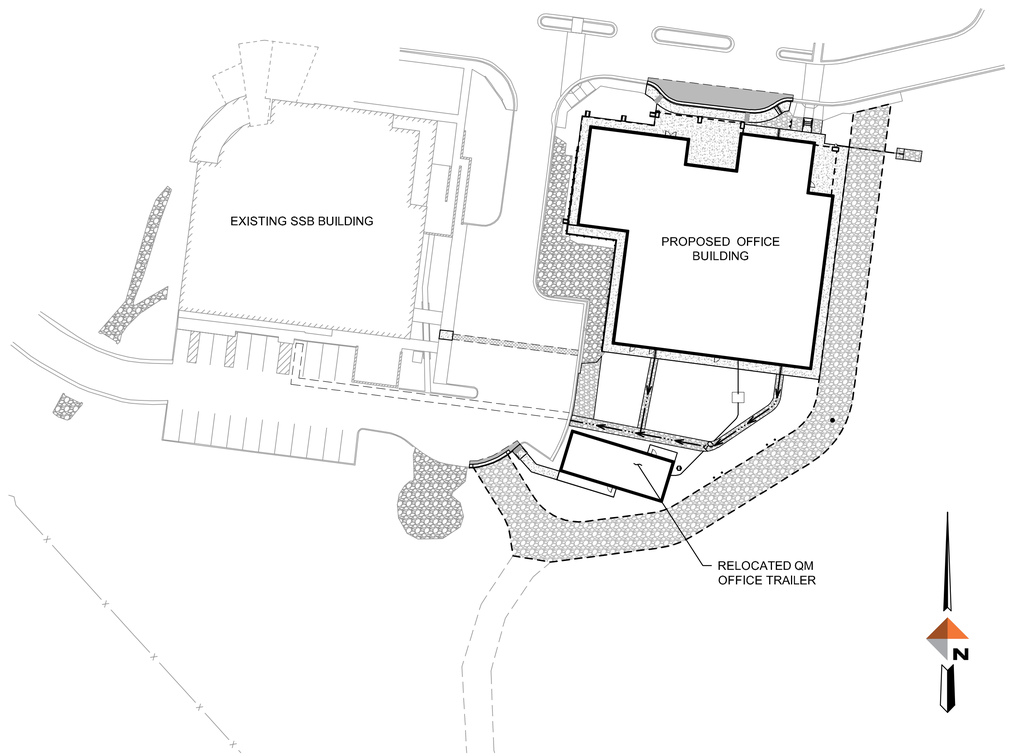

SITE MAP
SCALE: 1"=40'

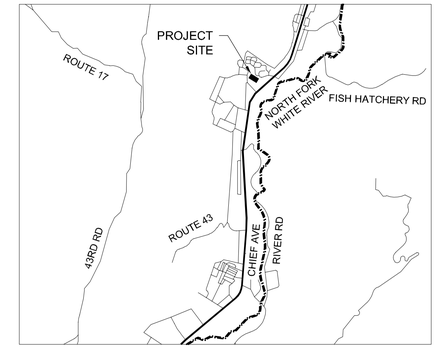

VICINITY MAP
NOT TO SCALE

SHEET INDEX

SHEET NO.	DESCRIPTION
C001	COVER SHEET
C002	NOTES SHEET
C100	DEMOLITION PLAN
C200	SITE PLAN
C300	GRADING AND DRAINAGE PLAN
C400	SANITARY SEWER PLAN AND PROFILE
C401	WATER PLAN
C500-C501	DETAILS
C502-C503	MAG STANDARD DETAILS
C504	MAG AND CITY OF PHOENIX DETAILS
C600	STORMWATER MANAGEMENT PLAN COVER
C601	STORMWATER MANAGEMENT PLAN DETAILS
C602	STORMWATER MANAGEMENT PLAN

PROJECT CONTACTS

CIVIL ENGINEER
DOWL
430 W. WARNER ROAD, SUITE B101
TEMPE, ARIZONA 85284
PHONE: (480) 753-0800
FAX: (800) 865-9847
CONTACT: ERIN R. O'BRIEN, P.E.

ARCHITECT
JOHNSON SMITTHIPONG
& ROSAMOND ASSOCIATES, INC.
5120 E. WILLIAMS CIRCLE, SUITE
600 TUCSON, ARIZONA 85711
PHONE: (520) 547-7904
CONTACT: BILL DRAPER, AIA

BASIS OF BEARINGS
BEARINGS SHOWN HEREON ARE BASED UPON U.S. STATE PLANE NAD83 COORDINATE SYSTEM ARIZONA STATE PLANE COORDINATE ZONE CENTRAL, DETERMINED BY GPS OBSERVATIONS COLLECTED DURING THIS SURVEY

BENCHMARK
THE FOLLOWING PARAMETERS WERE SET FOR THE BASIS OF THIS SURVEY:
SYSTEM: UNITED STATES STATE PLANE 1983 ZONE: ARIZONA CENTRAL 0202
HORIZONTAL DATUM: NAD 83/92
GEOID: ARIZONA GEOID 12B
VERTICAL DATUM: NAVD 88
UNITS: INTERNATIONAL FEET
(1 FOOT = 0.3048 METERS EXACTLY)

ALL BEARINGS ARE GRID BEARINGS. DISTANCES ARE GRID DISTANCES AND COORDINATES ARE GRID COORDINATES.

DIRECT MEASUREMENTS WERE MADE ON EACH POINT IN THE GEOCENTRIC COORDINATE SYSTEM OF WGS 84 AND AUTOMATIC TRANSLATIONS WERE MADE TO THE NORTH AMERICAN DATUM OF 1983 AND TO THE GROUND SCALED VERSION OF THE STATE PLANE GRID SYSTEM.

BASIS OF ELEVATIONS (BENCHMARK):
AN ELEVATION OF 5398.04 WAS HELD ON A FOUND NGS MONUMENT, DESIGNATION G 43 AS PUBLISHED.

ABBREVIATIONS

ABC	AGGREGATE BASE COURSE	EA	EACH	MH	MANHOLE	SEC/SECT	SECTION
AC	ASPHALT CONCRETE	EG	EXISTING GRADE	MIN	MINIMUM	SF	SQUARE FEET
ACSM	ALUMINUM CAP SURVEY MONUMENT	EL/ELV	ELEVATION	MUTCD	MANUAL OF UNIFORM TRAFFIC CONTROL DEVICES	SHT	SHEET
ADA	AMERICANS WITH DISABILITIES ACT	ELEV	ELEVATION			SPEC	SPECIFICATION(S)
ADOT	ARIZONA DEPARTMENT OF TRANSPORTATION	EXIST	EXISTING	N	NORTH	SS	SANITARY SEWER
BCSM	BRASS CAP SURVEY MONUMENT	FFE	FINISH FLOOR ELEVATION	NE	NORTHEAST	ST	STREET
BLDG	BUILDING	FG	FINISHED GRADE	NO	NUMBER	STA	STATION
BM	BENCHMARK	FL	FLOW LINE	NTS	NOT TO SCALE	STD	STANDARD
BOE	BASIS OF ELEVATION	G	GUTTER/GRAVEL	NW	NORTHWEST	SVC	SERVICE
BW	BOTTOM OF WALL	INV	INVERT	OC	ON CENTER	SW	SOUTHWEST, SIDEWALK
C	COMPUTED/CALCULATED/ CONCRETE	ID	INTERNAL DIAMETER/ INLINE DRAIN /IDENTIFICATION	P	PAVEMENT	T	TOWNSHIP
CT	COURT	IHS	INDIAN HEALTH SERVICES	PCC	PORTLAND CEMENT CONCRETE	TC	TOP OF CURB
CB	CATCH BASIN	L	LENGTH	PROP	PROPOSED	TW	TOP OF WALL
CO	CLEANOUT	LF	LINEAL FOOT	R	RADIUS, RANGE, RECORD, ROUTE	TYP	TYPICAL
CONST	CONSTRUCTION	LN	LANE	RCP	REINFORCED CONCRETE PIPE	US	UNITED STATES
CR	CREST	LOC	LOCATION	REQ	REQUIRED	W	WEST/WATER
DIA	DIAMETER	LT	LEFT	RD	ROAD	YR	YEAR
DIP	DUCTILE IRON PIPE	M	MEASURED	ROW	RIGHT OF WAY		
DET/DTL	DETAIL	MAG	MARICOPA ASSOCIATION OF GOVERMEMNENTS	R/W	RIGHT OF WAY		
E	EAST	MAX	MAXIMUM	RT	RIGHT		
		ME	MATCH EXISTING	S	SOUTH, SECTION		
				SD	STORM DRAIN		
				SE	SOUTHEAST		

AS-BUILT CERTIFICATION
I HEREBY CERTIFY THAT THE "AS BUILT" MEASUREMENTS AS SHOWN OR NOTED HEREON WERE MADE BY ME OR UNDER MY SUPERVISION OR AS NOTED AND ARE CORRECT TO THE BEST OF MY KNOWLEDGE AND BELIEF.

REGISTERED LAND SURVEYOR DATE

Contact Arizona 811 at least two full working days before you begin excavation
ARIZONA811 BLUE STAKE, INC.
Call 811 or click Arizona811.com

FINAL CONSTRUCTION DOCUMENTS PACKAGE

JSRa
JOHNSON SMITTHIPONG & ROSAMOND ASSOCIATES, INC.
5210 E Williams Cir • Ste 600• Tucson, AZ 85711
(520) 547-7904 • www.jsrarchinc.com

Consultants:

DOWL
WWW.DOWL.COM
430 W. Warner Road, #B101
Tempe, Arizona 85284
480-753-0800

Registered Professional Engineer (Civil) CERTIFICATE NO. 54744 ERIN R. O'BRIEN Date Signed 11/3/22 ARIZONA, U.S.A. Expires 06 / 30 / 2025

WHITERIVER ADMINISTRATION OFFICE BUILDING

200 W HOSPITAL DR
WHITERIVER, AZ 85941

HHSI102201800007I

U. S. DEPARTMENT OF HEALTH AND HUMAN SERVICES
INDIAN HEALTH SERVICE
PHOENIX AREA OFFICE

No.	Date	Description

Issue Date:	11/03/22
Project No:	3122.41629.02
Scale:	AS SHOWN
Drawn By:	EO
Checked By:	RI

FINAL CD

Sheet Title:
COVER SHEET

Sheet Number:
C001

Autodesk Docs://2022 Whiteriver Modular/21-020 06 Arch WRMOB 2022.rvt
5/17/2021 2:51:02 PM

ENGINEER'S GENERAL NOTES

1. NOTHING CONTAINED IN THE CONTRACT DOCUMENTS SHALL CREATE, OR SHALL BE CONSTRUED TO CREATE, ANY CONTRACTUAL RELATIONSHIP BETWEEN THE ENGINEER AND THE CONTRACTOR OR ANY SUBCONTRACTOR.
2. THE ENGINEER WILL NOT BE RESPONSIBLE FOR CONSTRUCTION MEANS, METHODS, TECHNIQUES, SEQUENCES, OR PROCEDURES OR FOR SAFETY PRECAUTIONS OR PROGRAMS UTILIZED IN CONNECTION WITH THE WORK. THIS IS THE CONTRACTOR'S SOLE RESPONSIBILITY. THE ENGINEER WILL NOT BE RESPONSIBLE FOR THE CONTRACTOR'S FAILURE TO CARRY OUT THE WORK IN ACCORDANCE WITH THE CONTRACT DOCUMENTS.
3. THE CONTRACTOR SHALL PROVIDE ADEQUATE MEANS OF CLEANING TRUCKS AND/OR OTHER EQUIPMENT OF MUD PRIOR TO ENTERING PUBLIC STREETS. IT SHALL ALSO BE THE CONTRACTOR'S RESPONSIBILITY TO CLEAN STREETS, ALLAY DUST, AND TO TAKE WHATEVER MEASURES ARE NECESSARY TO ENSURE THAT ALL ROADWAYS AND ON-SITE PARKING LOTS/FIRE LANES ARE MAINTAINED IN A CLEAN, MUD AND DUST-FREE CONDITION AT ALL TIMES.
4. IT SHALL BE THE RESPONSIBILITY OF ANY INDIVIDUAL, CONTRACTOR, UTILITY COMPANY OR CITY AGENCY TO CALL THE ARIZONA BLUE STAKE AT 811 OR (800) STAKE-IT (782-5348) A MINIMUM OF TWO (2) WORKING DAYS PRIOR TO EXCAVATION ACTIVITIES.
5. THE CONTRACTOR IS SPECIFICALLY CAUTIONED THAT THE UNDERGROUND UTILITY LOCATIONS AND/OR ELEVATIONS AS SHOWN ON THESE PLANS ARE BASED ON THE BEST INFORMATION AVAILABLE FROM UTILITY RECORDS AND OTHER DATA AS SUPPLIED TO THE ENGINEER. THE INFORMATION IS NOT BE RELIED ON AS BEING EXACT OR COMPLETE. THERE MAY BE OTHER UNDERGROUND UTILITY LINES, SERVICE LINES, AND STRUCTURES PRESENT IN THE SUBJECT AREA. THE CONTRACTOR SHALL VERIFY LOCATIONS AND ELEVATIONS OF EXISTING UTILITIES PRIOR TO CONSTRUCTION. THE CONTRACTOR MUST CALL THE APPROPRIATE UTILITY COMPANIES AT LEAST FORTY-EIGHT (48) HOURS BEFORE ANY EXCAVATION TO REQUEST EXACT FIELD LOCATION OF UTILITIES. IF EXISTING UTILITIES ARE FOUND TO CONFLICT WITH THE PROPOSED IMPROVEMENTS, THE CONTRACTOR SHALL NOTIFY THE ENGINEER PRIOR TO PROCEEDING WITH WORK.
6. ALL CONSTRUCTION SHALL CONFORM TO THE LATEST MAG STANDARD DETAILS AND SPECIFICATIONS.
7. THE ENGINEER AND APPLICABLE AGENCY MUST APPROVE, PRIOR TO CONSTRUCTION, ANY ALTERATION OR VARIANCE FROM THESE PLANS. ANY PROPOSED VARIATIONS SHALL BE SHOWN ON CONSTRUCTION FIELD PRINTS AND TRANSMITTED TO THE ENGINEER FOR REVIEW.
8. THE CONTRACTOR IS RESPONSIBLE FOR OBTAINING A DUST CONTROL PERMIT PRIOR TO PERFORMING ANY WORK.
9. ANY INSPECTION BY THE OWNER OR ENGINEER SHALL NOT IN ANY WAY RELIEVE THE CONTRACTOR FROM ANY OBLIGATION TO PERFORM THE WORK IN STRICT COMPLIANCE WITH THE APPLICABLE CODES AND COMMUNITY REQUIREMENTS.
10. THE CONTRACTOR SHALL BE RESPONSIBLE TO OBTAIN ALL REQUIRED DEMOLITION PERMITS AND BONDS PRIOR TO DEMOLITION WORK. THE CONTRACTOR SHALL PROVIDE A COPY OF ALL REQUIRED PERMITS TO THE ENGINEER IF REQUESTED.
11. SHOULD THE CONTRACTOR ENCOUNTER AN EXISTING STRUCTURE (ABOVE OR BELOW GROUND) IN THE WORK FOR WHICH DISPOSITION IS NOT INDICATED ON THE PLANS, THE ENGINEER SHALL BE NOTIFIED PRIOR TO DISTURBING SUCH STRUCTURE. THE DISPOSITION OF EXISTING STRUCTURES SO ENCOUNTERED SHALL BE DETERMINED BY THE ENGINEER.
12. THE CONTRACTOR IS RESPONSIBLE FOR REMOVING ALL CONSTRUCTION DEBRIS FROM THE SITE AND DISPOSING OF THE DEBRIS IN ACCORDANCE WITH LOCAL, STATE, AND FEDERAL RULES, REGULATIONS, AND LAWS. THE CONTRACTOR IS RESPONSIBLE FOR OBTAINING ALL PERMITS REQUIRED FOR DEMOLITION AND PROPER DISPOSAL.
13. THE CONTRACTOR SHALL NOT TAKE ADVANTAGE OF ANY APPARENT ERROR OR OMISSION ON THE PLANS OR SPECIFICATIONS. IN THE EVENT THE CONTRACTOR DISCOVERS ANY APPARENT ERROR OR DISCREPANCY, HE SHALL IMMEDIATELY CALL UPON THE ENGINEER FOR HIS INTERPRETATION AND DECISION, AND SUCH DECISION SHALL BE FINAL.
14. EXISTING SITE IMPROVEMENTS WHICH ARE DAMAGED OR DISPLACED BY THE CONTRACTOR'S OPERATIONS SHALL BE REMOVED AND REPLACED BY THE CONTRACTOR AT NO ADDITIONAL COST TO THE OWNER. THE CONTRACTOR SHALL NOTIFY THE OWNER, WHO SHALL APPROVE REPAIRS PRIOR TO CONSTRUCTION. THE OWNER MAY WITHHOLD FINAL PAYMENT UNTIL REPAIRS ARE INSPECTED AND APPROVED.
15. THE CONTRACTOR SHALL FIELD VERIFY THE ELEVATIONS AND BENCHMARKS PRIOR TO COMMENCING WORK. THE CONTRACTOR SHALL ALSO FIELD VERIFY LOCATION, ELEVATION, AND/OR SIZE OF EXISTING PIPE INVERTS, FLOOR ELEVATIONS, AND CURB OR PAVEMENT AT LOCATIONS WHERE MATCHING INTO EXISTING WORK. THE CONTRACTOR SHALL FIELD VERIFY HORIZONTAL CONTROL BY REFERENCING SHOWN DIMENSIONS OR COORDINATES TO KNOWN PROPERTY LINES AND NOTIFY THE ENGINEER OF DISCREPANCIES IN EITHER VERTICAL OR HORIZONTAL CONTROL PRIOR TO PROCEEDING WITH WORK.
16. PROPERTY CORNERS AND BENCHMARKS SHALL BE CAREFULLY PROTECTED. PROPERTY MONUMENTS DISTURBED BY THE CONTRACTOR'S OPERATIONS SHALL BE REPLACED AT THE CONTRACTOR'S EXPENSE AND AT NO ADDITIONAL COST TO THE OWNER.
17. ALL CONDUITS (BOX CULVERTS, REINFORCED CONCRETE PIPE, CORRUGATED METAL PIPE, AND/OR HDPE PIPE) SHOWN ON THESE PLANS ARE TO BE DESIGNED FOR STANDARD HIGHWAY LOADINGS. THE STANDARD SATISFACTORY MINIMUM COVER REQUIREMENTS AS ESTABLISHED BY THE CONDUIT MANUFACTURER MAY NOT ALWAYS BE ADEQUATE DURING CONSTRUCTION. WHEN CONSTRUCTION EQUIPMENT, FREQUENTLY HEAVIER THAN TRAFFIC LOADS FOR WHICH THE CONDUIT HAS BEEN DESIGNED, IS TO BE DRIVEN OVER OR CLOSE TO THE BURIED CONDUIT, IT SHALL BE THE RESPONSIBILITY OF THE CONTRACTOR TO PROVIDE THE ADDITIONAL COVER REQUIRED TO AVOID DAMAGE TO THE CONDUIT. THE ADEQUACY OF THE COVER REQUIREMENTS FOR THE CONDUITS SHALL BE ANALYZED AND CHECKED BY THE CONTRACTOR TO ADDRESS LOADING CONDITIONS IMPOSED BY CONSTRUCTION ACTIVITY. ANY CONDUIT DAMAGED BY CONSTRUCTION ACTIVITY SHALL BE REPLACED AT THE CONTRACTOR'S EXPENSE.
18. THE CONTRACTOR SHALL KEEP A COPY OF THE APPROVED PLANS IN AN EASILY ACCESSIBLE LOCATION ON THE SITE AT ALL TIMES.
19. AT THE COMPLETION OF THE PROJECT, THE CONTRACTOR SHALL PROVIDE REDLINED MARK-UPS OF AS-BUILT CONDITIONS TO THE ENGINEER IN HARD COPY OR ELECTRONIC FORMATS.

ENGINEER'S GRADING & DRAINAGE NOTES

1. THE MAXIMUM SLOPE RATIO ON CUT/FILL SLOPES SHALL BE FOUR (4) HORIZONTAL TO ONE (1) VERTICAL UNLESS OTHERWISE SPECIFIED. THE MAXIMUM SLOPE RATIO IN RETENTION BASINS SHALL BE FOUR (4) HORIZONTAL TO ONE (1) VERTICAL.
2. AT LOCATIONS CALLED OUT TO MATCH EXISTING, THE CONTRACTOR SHALL MATCH FINISHED GRADES OF PROPOSED PAVEMENT AND PROPOSED CURB AND GUTTER WITH THE EXISTING PAVEMENT AND EXISTING CURB AND GUTTER. THE CONTRACTOR SHALL ENSURE POSITIVE DRAINAGE FROM ALL CURBING AND EXISTING PAVEMENT.
3. DISTURBED AREAS OUTSIDE OF THE CONSTRUCTION LIMITS AS SHOWN ON THE PLANS SHALL BE RESTORED TO THEIR ORIGINAL GRADE AND CONDITION AT THE CONTRACTOR'S EXPENSE AND AT NO ADDITIONAL COST TO THE OWNER.
4. ALL SURFACES ALONG ACCESSIBLE ROUTES AND ADA RAMPS SHALL BE STABLE, FIRM, SLIDE-RESISTANT, AND SHALL COMPLY WITH THE LATEST ADAAG REQUIREMENTS. ANY GRADE OR ELEVATION CHANGES TO THE ACCESSIBLE ROUTE MADE IN THE FIELD SHALL BE REVIEWED WITH THE ENGINEER PRIOR TO CONSTRUCTION.
5. ALL STORM DRAIN PIPE SHALL HAVE A SMOOTH INTERIOR REGARDLESS OF PIPE MATERIAL UNLESS OTHERWISE NOTED ON THE PLANS. UNDER NO CIRCUMSTANCES SHALL A CORRUGATED INTERIOR BE USED FOR STORM DRAIN.
6. THE CONTRACTOR SHALL COMPLETELY CLEAN ALL DRAINAGE STRUCTURES AND STORM DRAIN PIPES AS REQUIRED AT THE END OF CONSTRUCTION PRIOR TO REMOVING THE SWPPP BMPs.
7. A PROJECT SPECIFIC GEOTECHNICAL REPORT WAS NOT PERFORMED.
8. SPOT ELEVATIONS SHOWN ON PLANS ARE FINISHED GRADE ELEVATIONS UNLESS OTHERWISE SHOWN.
9. ALL GRADING, SITE PREPARATION, EARTHWORK, AND BACKFILL SHALL COMPLY WITH THE RECOMMENDATIONS SET FORTH IN THE GEOTECHNICAL REPORT FOR THE WHITERIVER MODULAR BUILDING PREPARED BY ATEK ENGINEERING CONSULTANTS (ATEK PROJECT #200276).

ENGINEER'S PAVING NOTES

1. SIGN CONSTRUCTION AND PAVEMENT MARKING SHALL CONFORM TO THE REQUIREMENTS OF THE MANUAL ON UNIFORM TRAFFIC CONTROL DEVICES (MUTCD), CURRENT EDITION.
2. ALL CURB RADII ARE DIMENSIONED TO THE FACE OF CURB, UNLESS NOTED OTHERWISE
3. ALL PAVEMENTS ARE HEAVY DUTY ASPHALT PAVEMENT, UNLESS OTHERWISE NOTED.
4. WHEN ABUTTING NEW PAVEMENT TO EXISTING, SAW CUT THE EXISTING PAVEMENT TO A NEAT STRAIGHT LINE (TWO FEET MINIMUM) AS SHOWN ON THE PLANS. REMOVE ALL BROKEN AND CRACKED PAVEMENT AND MATCH NEW PAVEMENT TO EXISTING WITH A TACK COAT AT ALL JOINTS.
5. THE FRAME AND GRATE ELEVATIONS OF EXISTING STRUCTURES SUCH AS, BUT NOT LIMITED TO, MANHOLES, VAULTS, WATER VALVES AND ELECTRICAL BOXES SHALL BE ADJUSTED AS NECESSARY TO BE FLUSH WITH PROPOSED PAVEMENT OR FINISHED GRADE ELEVATIONS AS SHOWN ON THE PLANS.

ENGINEER'S UTILITY NOTES

1. SANITARY SEWER MAIN CONSTRUCTION SHALL BE CONSTRUCTED IN ACCORDANCE WITH THE LATEST STANDARDS, SPECIFICATIONS, AND DETAILS OF THE MARICOPA ASSOCIATION OF GOVERNMENTS (MAG).
2. EXISTING UTILITIES ARE SHOWN BASED UPON THE BEST AVAILABLE INFORMATION AVAILABLE. CONTRACTOR TO VERIFY THE LOCATION AND ELEVATION OF EXISTING UTILITIES PRIOR TO COMMENCING CONSTRUCTION.
3. ALL SANITARY SEWER MAIN MATERIAL AND MINIMUM COVER SHALL BE PER MAG SPECIFICATIONS UNLESS OTHERWISE NOTED. ALL SANITARY SEWER LINES SHALL BE SDR-35 PVC IN CONFORMANCE WITH ASTM D3034.
4. NO WATER PIPE SHALL PASS THROUGH OR COME INTO CONTACT WITH ANY PART OF A SEWER MANHOLE. THE MINIMUM HORIZONTAL SEPARATION BETWEEN WATER MAINS AND MANHOLES SHALL BE SIX FEET (6'), MEASURED FROM THE OUTSIDE OF THE WATER MAIN PIPE TO CENTER OF THE MANHOLE.
5. ALL FILL MATERIAL IS TO BE IN PLACED AND COMPACTED PRIOR TO THE INSTALLATION OF PROPOSED UTILITIES.
6. THE CONTRACTOR SHALL NOTIFY THE UTILITY AUTHORITIES 72 HOURS PRIOR TO CONNECTING TO ANY EXISTING LINE.
7. IN THE EVENT OF A VERTICAL CONFLICT BETWEEN WATER MAINS, SANITARY SEWER, STORM DRAINS, AND GAS LINES (EXISTING AND PROPOSED), THE SANITARY SEWER SHALL BE DUCTILE IRON PIPE WITH MECHANICAL JOINTS AT LEAST 10 FEET ON BOTH SIDES OF CROSSING. THE WATER MAIN SHALL HAVE MECHANICAL JOINTS WITH APPROPRIATE THRUST BLOCKING AS REQUIRED TO PROVIDE A MINIMUM OF 24" CLEARANCE MEETING REQUIREMENTS OF ANSI A21.10 OR ANSI 21.11 (AWWA C-151) (CLASS 50).
8. ALL CONCRETE FOR ENCASEMENTS SHALL BE CLASS A AND HAVE A MINIMUM 28-DAY COMPRESSION STRENGTH A 3,000 PSI.
9. THE FRAME AND GRATE ELEVATIONS OF EXISTING STRUCTURES SUCH AS, BUT NOT LIMITED TO, MANHOLES, VAULTS, AND ELECTRICAL BOXES, SHALL BE ADJUSTED AS NECESSARY TO BE FLUSH WITH PROPOSED PAVEMENT OR FINISHED GRADE ELEVATION.
10. THE CONTRACTOR SHALL INSTALL CONTINUOUS TRACER WIRE FOR NON-METAL PIPE PER MAG SPECIFICATIONS.
11. THE CONTRACTOR SHALL PREPARE TRENCH BEDDING AND PROVIDE BACKFILL IN ACCORDANCE WITH MAG SPECIFICATION 601.
12. ELECTRICAL, COMMUNICATION, AND GAS UTILITY LINES SHOWN ON THE PLANS ARE FOR REFERENCE ONLY. THE CONTRACTOR SHALL COORDINATE LOCATION AND INSTALLATION REQUIREMENTS WITH THE APPROPRIATE ENTITY FOR THESE UTILITY LINES. THE CONTRACTOR SHALL NOTIFY THE ENGINEER OF ANY POTENTIAL CONFLICT THAT MAY ARISE WITH THE INSTALLATION OF THESE UTILITY LINES.
13. PIPES, FITTINGS, VALVES, FIRE HYDRANTS, AND OTHER APPURTENANCES SHALL CONFORM TO THE CURRENT STANDARDS OF THE AMERICAN WATER WORKS ASSOCIATION, AMERICAN STANDARDS ASSOCIATION OR THE FEDERAL GOVERNMENT.
14. PLASTIC PIPE AND FITTINGS MUST BEAR THE SEAL OF THE NATIONAL SANITATION FOUNDATION. EVIDENCE OF A PRODUCT CONFORMS TO THE REQUIREMENTS OF THIS SECTION SHALL BE THE APPEARANCE ON THE PRODUCT OR PRODUCT PACKAGE OF A SEAL OF A CERTIFYING ENTITY THAT IS ACCREDITED BY THE AMERICAN NATIONAL STANDARDS INSTITUTE TO PROVIDE CERTIFICATION

EARTHWORK QUANTITIES

ESTIMATED TOTAL CUT: 53 CY
ESTIMATED TOTAL FILL: 2,012 CY
NET FILL: 1,958 CY

THE ESTIMATES FOR EARTHWORK QUANTITIES ARE NET UNADJUSTED QUANTITIES ONLY. THEY DO NOT ACCOUNT FOR EXCESS CUT AND FILL THAT MAY BE REQUIRED DURING CONSTRUCTION. THEY ARE GIVEN ONLY FOR REFERENCE PURPOSES. CONTRACTOR SHALL DETERMINE THEIR OWN QUANTITIES.

Contact Arizona 811 at least two full working days before you begin excavation
ARIZONA811 BLUE STAKE, INC.
Call 811 or click Arizona811.com

FINAL CONSTRUCTION DOCUMENTS PACKAGE

JSRa
JOHNSON SMITTHIPONG & ROSAMOND ASSOCIATES, INC.
5210 E Williams Cir • Ste 600• Tucson, AZ 85711
(520) 547-7904 • www.jsrarchinc.com

Consultants:

DOWL
WWW.DOWL.COM
430 W. Warner Road, #B101
Tempe, Arizona 85284
480-753-0800

Registered Professional Engineer (Civil) CERTIFICATE NO. 54744 ERIN R. O'BRIEN Date Signed 11/9/22 ARIZONA, U.S.A.
Expires 06 / 30 / 2025

WHITERIVER ADMINISTRATION OFFICE BUILDING

200 W HOSPITAL DR
WHITERIVER, AZ 85941

HHSI102201800007I

U. S. DEPARTMENT OF HEALTH AND HUMAN SERVICES
INDIAN HEALTH SERVICE
PHOENIX AREA OFFICE

No.	Date	Description

Issue Date:	11/03/22
Project No:	3122.41629.02
Scale:	AS SHOWN
Drawn By:	EO
Checked By:	RI

FINAL CD

Sheet Title:

NOTES SHEET

Sheet Number:

C002

Autodesk Docs://2022 Whiteriver Modular/21-020 06 Arch WRMOB 2022.rvt
5/17/2021 2:51:02 PM

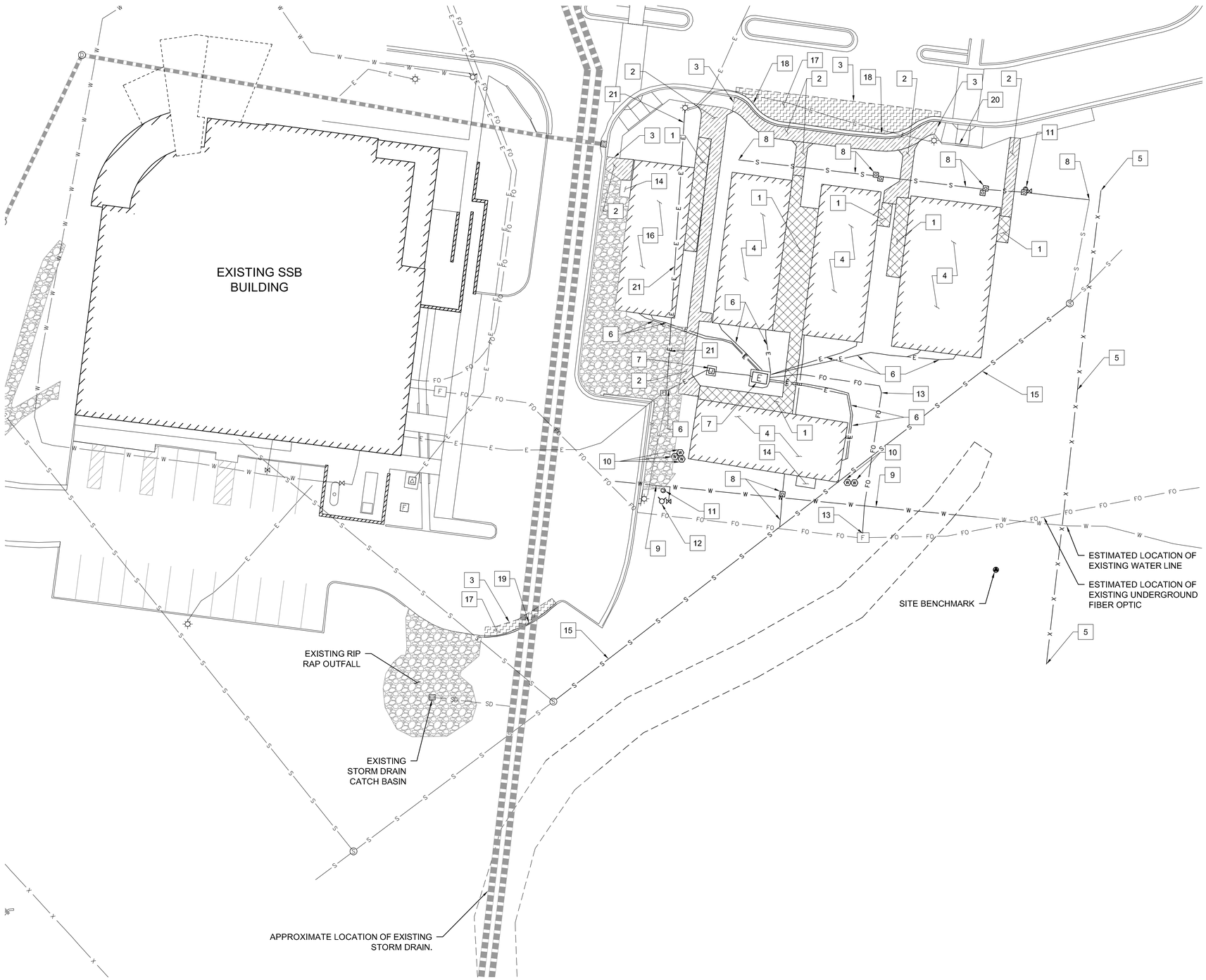

20 0 20 40
SCALE IN FEET

N

DEMOLITION KEYNOTES

1. REMOVE EXISTING WOODEN DECKING.
2. REMOVE EXISTING CONCRETE SIDEWALK AND DISPOSE PER LOCAL REGULATIONS. SAWCUT ALONG JOINT.
3. SAWCUT EXISTING PAVEMENT, SIDEWALK, AND/OR CURB AND GUTTER, FULL DEPTH, TO A NEAT, CLEAN, VERTICAL EDGE.
4. REMOVE EXISTING OFFICE TRAILER COORDINATE DEMOLITION WITH IHS FACILITY STAFF.
5. REMOVE EXISTING FENCE AND ASSOCIATED FENCE POLE FOOTINGS.
6. REMOVE EXISTING UNDERGROUND ELECTRICAL CONDUIT AND ASSOCIATED WIRING, TYPICAL.
7. REMOVE EXISTING ELECTRICAL CABINET AND ASSOCIATED CONCRETE PAD.
8. REMOVE EXISTING SANITARY SEWER LINE AND ASSOCIATED CLEANOUTS.
9. REMOVE EXISTING WATER LINE WITHIN PROJECT AREA.
10. REMOVE EXISTING WATER METERS AND ASSOCIATED SERVICE WATER LINES TO EXISTING OFFICE TRAILERS.
11. EXISTING YARD HYDRANT AND VALVE TO BE REMOVED.
12. EXISTING FIRE HYDRANT TO BE REMOVED.
13. REMOVE FIBER OPTIC SERVICE LINE TO EXISTING OFFICE TRAILERS BACK TO EXISTING VAULT. CONTRACTOR TO CONFIRM EXTENTS OF FIBER OPTIC LINE PRIOR TO BEGINNING DEMOLITION.
14. REMOVE EXISTING METAL STAIRS.
15. EXISTING SANITARY SEWER LINE TO BE ABANDONED IN PLACE AFTER REALIGNMENT. FILL ABANDONED PIPE WITH 1/2 SACK CLSM PER MAG SPEC SECTION 604 AND CAP BOTH ENDS. REFER TO SEWER PLANS.
16. EXISTING QM OFFICE TRAILER TO BE RELOCATED. COORDINATE RELOCATION WITH IHS STAFF.
17. REMOVE EXISTING ASPHALT CONCRETE PAVEMENT SECTION FULL DEPTH
18. REMOVE EXISTING CURB AND GUTTER.
19. REMOVE PORTION OF EXISTING CURB FOR NEW SIDEWALK RAMP AND FIRE LANE ACCESS ROAD INSTALLATION.
20. REMOVE PORTION OF EXISTING CURB AT THE SIDEWALK RAMP FOR INSTALLATION OF NEW SIDEWALK AND STAIR CONNECTION.
21. CONTRACTOR TO FIELD VERIFY SITE LIGHT ELECTRICAL FEED AND REMOVE PORTION THAT WILL BE IN CONFLICT WITH NEW BUILDING. SEE SITE PLAN FOR INSTRUCTIONS ON RE-FEEDING EXISTING SITE LIGHT TO THE SOUTH.

GENERAL NOTES

1. THE CONTRACTOR SHALL FIELD WALK THE SITE WITH THE OWNER TO COORDINATE THE DEMOLITION PHASING AND ACTIVITIES.
2. CONTRACTOR SHALL DISPOSE OF ALL REMOVED MATERIALS PER LOCAL REGULATIONS.
3. UTILITY INFORMATION SHOWN ON THIS PLAN IS PER UTILITY LOCATE SURVEY CONDUCTED BY USI AND AS-BUILT UTILITY INFORMATION PROVIDED BY IHS. NOT ALL UTILITIES MAY HAVE BEEN FOUND.
4. THE CONTRACTOR SHALL COORDINATE WITH THE OWNER TO DETERMINE IF ANY OF THE DEMOLITION ITEMS ARE SALVAGEABLE OR CAN BE RE-USED.

Contact Arizona 811 at least two full working days before you begin excavation
ARIZONA811 BLUE STAKE, INC.
Call 811 or click Arizona811.com

FINAL CONSTRUCTION DOCUMENTS PACKAGE

JSRa
JOHNSON SMITTHIPONG & ROSAMOND ASSOCIATES, INC.
5210 E Williams Cir • Ste 600• Tucson, AZ 85711
(520) 547-7904 • www.jsrarchinc.com

Consultants:

DOWL
WWW.DOWL.COM
430 W. Warner Road, #B101
Tempe, Arizona 85284
480-753-0800

Registered Professional Engineer (Civil) CERTIFICATE NO. 54744 ERIN R. O'BRIEN Date Signed 11/3/22 ARIZONA, U.S.A.
Expires 06 / 30 / 2025

WHITERIVER ADMINISTRATION OFFICE BUILDING

200 W HOSPITAL DR
WHITERIVER, AZ 85941

HHSI102201800007I

U. S. DEPARTMENT OF HEALTH AND HUMAN SERVICES
INDIAN HEALTH SERVICE
PHOENIX AREA OFFICE

No.	Date	Description

Issue Date:	11/03/22
Project No:	3122.41629.02
Scale:	AS SHOWN
Drawn By:	EO
Checked By:	RI

FINAL CD

Sheet Title:

DEMOLITION PLAN

Sheet Number:

C100

Autodesk Docs://2022 Whiteriver Modular/21-020 06 Arch WRMOB 2022.rvt
5/17/2021 2:51:02 PM

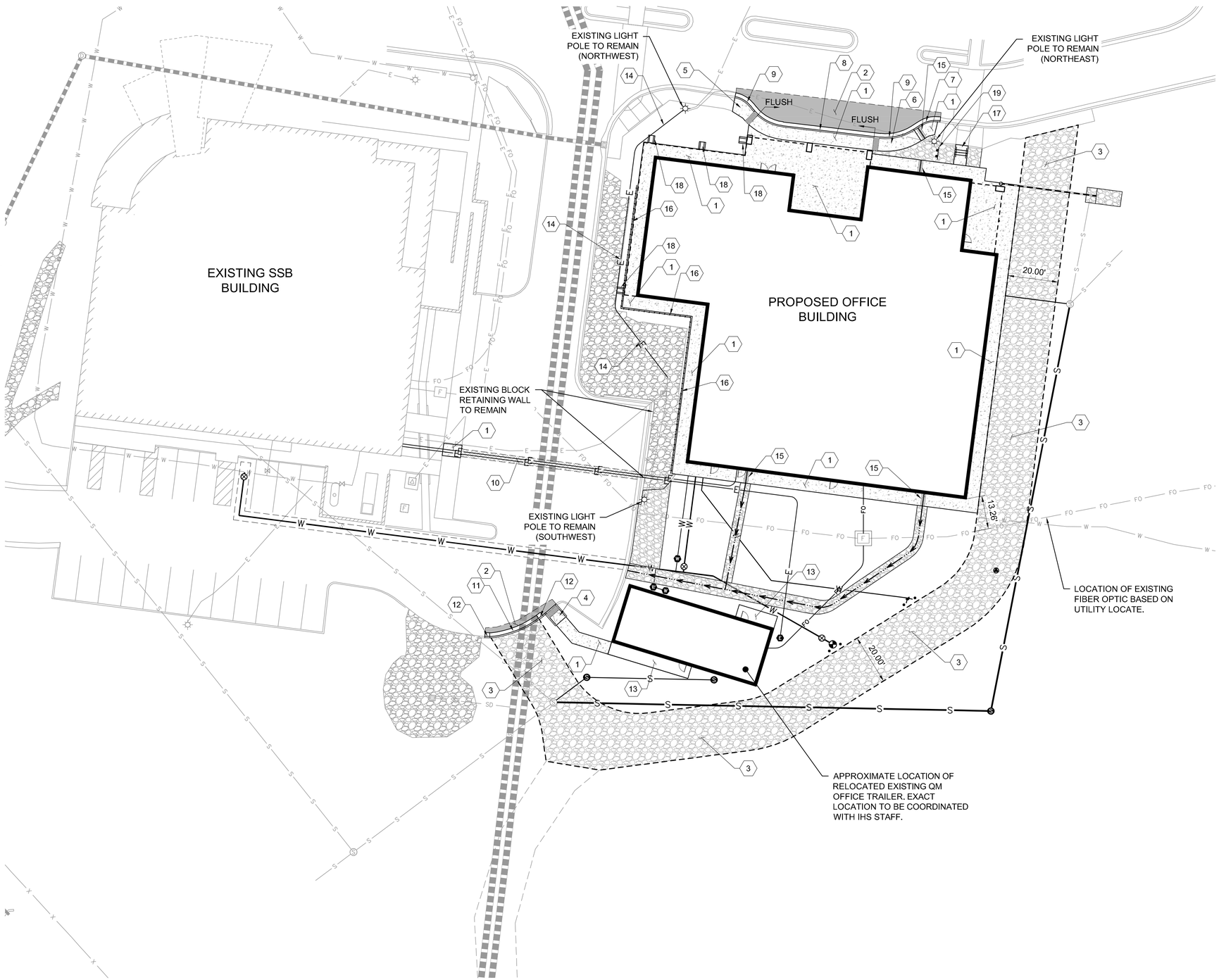

20 0 20 40
SCALE IN FEET

N

SITE PLAN KEYNOTES

1. MODIFIED 4" CONCRETE SIDEWALK PER MAG STD DTL 230. MODIFIED TO PREPARE SUBGRADE PER GEOTECHNICAL RECOMMENDATIONS.
2. ASPHALT CONCRETE PAVEMENT SECTION, 3" AC OVER 6" ABC PER DETAIL 1 ON SHEET C500. (MATCH EXISTING SECTION)
3. FIRE LANE PAVEMENT SECTION, 8" ABC PER DETAIL 1 ON SHEET C500.
4. CONSTRUCT SIDEWALK RAMP TYPE 1 PER DETAIL 2 ON SHEET C500.
5. CONSTRUCT SIDEWALK RAMP TYPE 2 PER DETAIL 3 ON SHEET C500.
6. CONSTRUCT SIDEWALK RAMP TYPE 3 PER DETAIL 4 ON SHEET C500.
7. TYPE 'A' CONCRETE VERTICAL CURB AND GUTTER PER MAG STD DTL 220-1.
8. MODIFIED TYPE 'A' CONCRETE VERTICAL CURB AND GUTTER PER MAG STD DTL 220-1. MODIFIED TO BE FLUSH.
9. TRANSITION FROM FULL HEIGHT CURB AND GUTTER TO FLUSH CURB AND GUTTER ALONG SIDEWALK RAMP.
10. T-TOP TRENCH REPAIR PER MAG STD DTL 200-1.
11. TYPE 'E' CONCRETE MOUNTABLE CURB AND GUTTER PER MAG STD DTL 220-2.
12. TRANSITION FROM TYPE 'E' TO TYPE 'A' CURB AND GUTTER OVER 2' PER MAG STD DTL 220-2.
13. ACCESS RAMP TO QM TRAILER BY SITE CONTRACTOR. SITE CONTRACTOR TO PROVIDE AN ADA COMPLIANT SET OF WOOD STAIRS AT REAR DOOR (NORTH SIDE) AND 6.00' X 10.00' FRAME DECK AND ACCESSIBLE RAMP AT THE FRONT ENTRANCE DOOR, SUPPORTED WITH CONCRETE POST FOOTINGS. THE STAIRS/RAMP ARE REQUIRED TO ACCESS AND OCCUPY. PROVIDE SHOP DRAWINGS TO OWNER AND ARCHITECT FOR REVIEW AND APPROVAL.
14. RELOCATED ELECTRICAL FEED FOR THE EXISTING LIGHT POLE SOUTHWEST. ROUTE OUTSIDE OF NEW BUILDING FOOTPRINT. MATCH EXISTING CONDUIT SIZE AND RE-FEED WIRES IN KIND FROM EXISTING LIGHT POLE NORTHWEST TO EXISTING LIGHT POLE SOUTHWEST. RE-ESTABLISH EXISTING RIPRAP AS NEEDED FOR CONDUIT INSTALLATION INCLUDING RE-INSTALLING FILTER FABRIC AT BOTTOM OF RIPRAP.
15. SIDEWALK SCUPPER PER DETAIL 9 ON SHEET C501.
16. INSTALL SAFETY RAIL PER MAG STD DTL. 145.
17. CONSTRUCT SIDEWALK STEPS PER DETAIL 12 ON SHEET C501.
18. ROOF DOWNSPOUT SPLASH PAD PER DETAIL 8 ON SHEET C500.
19. MONUMENT SIGN - REFER TO ARCHITECTURAL PLANS FOR DETAILS AND LOCATION.

FINAL CONSTRUCTION DOCUMENTS PACKAGE

Contact Arizona 811 at least two full working days before you begin excavation
ARIZONA811 BLUE STAKE, INC.
Call 811 or click Arizona811.com

JSRa
JOHNSON SMITTHIPONG & ROSAMOND ASSOCIATES, INC.
5210 E Williams Cir • Ste 600• Tucson, AZ 85711
(520) 547-7904 • www.jsrarchinc.com

Consultants:

DOWL
WWW.DOWL.COM
430 W. Warner Road, #B101
Tempe, Arizona 85284
480-753-0800

Registered Professional Engineer (Civil) CERTIFICATE NO. 54744 ERIN R. O'BRIEN Date Signed 11/3/22 ARIZONA, U.S.A.
Expires 06 / 30 / 2025

WHITERIVER ADMINISTRATION OFFICE BUILDING

200 W HOSPITAL DR
WHITERIVER, AZ 85941

HHSI1022018800007I

U. S. DEPARTMENT OF HEALTH AND HUMAN SERVICES
INDIAN HEALTH SERVICE
PHOENIX AREA OFFICE

No.	Date	Description

Issue Date:	11/03/22
Project No:	3122.41629.02
Scale:	AS SHOWN
Drawn By:	EO
Checked By:	RI

FINAL CD

Sheet Title:

SITE PLAN

Sheet Number:

C200

Autodesk Docs://2022 Whiteriver Modular/21-020 06 Arch WRMOB 2022.rvt
5/17/2021 2:51:02 PM

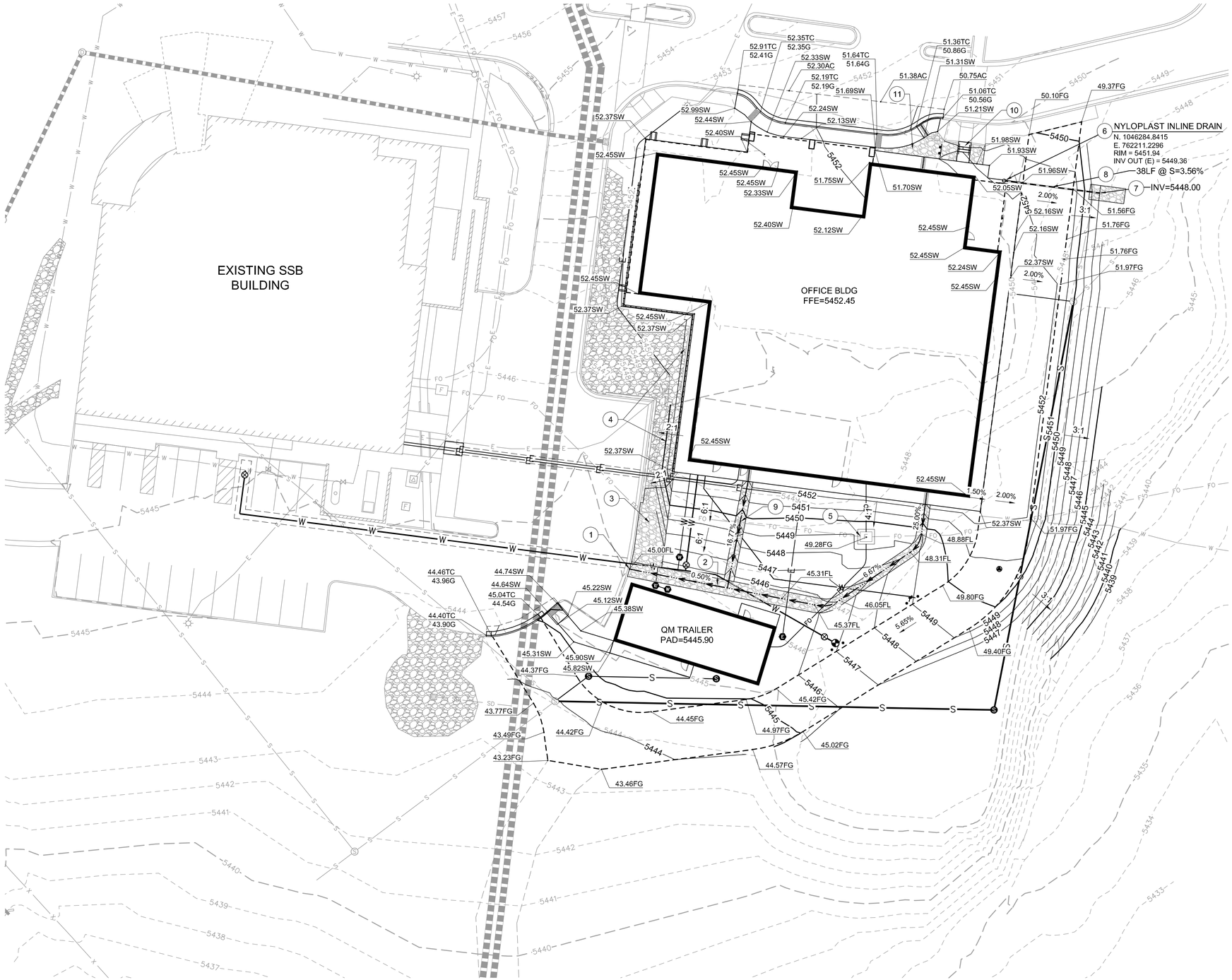

N

20 0 20 40
SCALE IN FEET

GRADING AND DRAINAGE KEYNOTES

1. CUT CURB TO PROVIDE A 4' WIDE CURB OPENING TO ALLOW FOR DRAINAGE PASS THROUGH.
2. CONSTRUCT 6' WIDE RIPRAP SWALE PER DETAIL 10 ON SHEET C501.
3. PROVIDE RIPRAP ON SLOPE. MATCH EXISTING SLOPE PROTECTION RIPRAP SIZE AND DEPTH.
4. RESET EXISTING RIPRAP TO ACCOMMODATE NEW BUILDING CONSTRUCTION AND REVISED GRADING IN GENERAL AREA.
5. ADJUST EXISTING FIBER BOX TO NEW FINISHED GRADE. USE BOX EXTENSION.
6. INSTALL 8" NYLOPLAST INLINE DRAIN WITH PEDESTRIAN GRATE AT ROOF DRAIN DOWNSPOUT LOCATION. SEE DETAIL 6 ON SHEET C500.
7. RIPRAP AT./AROUND PIPE END. RIPRAP D50 = 6" DEPTH = 12". SEE DETAIL 5 ON SHEET C500 FOR RIPRAP PLACEMENT.
8. INSTALL 6" ADS N-12 STORM PIPE WITH SMOOTH INTERIOR AND WATER TIGHT JOINTS. LENGTH AND SLOPE PER PLAN.
9. CONSTRUCT 4' WIDE RIPRAP SWALE PER DETAIL 10 ON SHEET C501.
10. SEE INSET THIS SHEET FOR GRADING AT AND NEAR PROPOSED STAIRS.
11. PLACE RIPRAP RIPRAP D50 = 6" DEPTH = 12" AS SHOWN. SEE DETAIL 5 ON SHEET C500 FOR RIPRAP PLACEMENT.

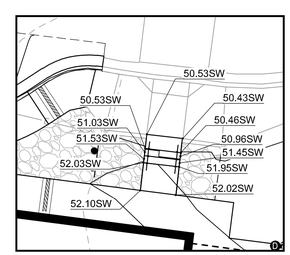

INSET

SCALE: 1"=10'

FINAL CONSTRUCTION DOCUMENTS PACKAGE

Contact Arizona 811 at least two full working days before you begin excavation
ARIZONA811 BLUE STAKE, INC.
Call 811 or click Arizona811.com

JOHNSON SMITTHIPONG & ROSAMOND ASSOCIATES, INC.
5210 E Williams Cir • Ste 600• Tucson, AZ 85711
(520) 547-7904 • www.jsrarchinc.com

Consultants:

DOWL
WWW.DOWL.COM
430 W. Warner Road, #B101
Tempe, Arizona 85284
480-753-0800

Registered Professional Engineer (Civil) CERTIFICATE NO. 54744 ERIN R. O'BRIEN Date Signed 11/3/22 ARIZONA, U.S.A.
Expires 06 / 30 / 2025

WHITERIVER ADMINISTRATION OFFICE BUILDING

200 W HOSPITAL DR
WHITERIVER, AZ 85941

HHSI102201800007I

U. S. DEPARTMENT OF HEALTH AND HUMAN SERVICES
INDIAN HEALTH SERVICE
PHOENIX AREA OFFICE

No.	Date	Description

Issue Date:	11/03/22
Project No:	3122.41629.02
Scale:	AS SHOWN
Drawn By:	EO
Checked By:	RI

FINAL CD

Sheet Title:

GRADING & DRAINAGE PLAN

Sheet Number:

C300

Autodesk Docs://2022 Whiteriver Modular/21-020 06 Arch WRMOB 2022.rvt
5/17/2021 2:51:02 PM

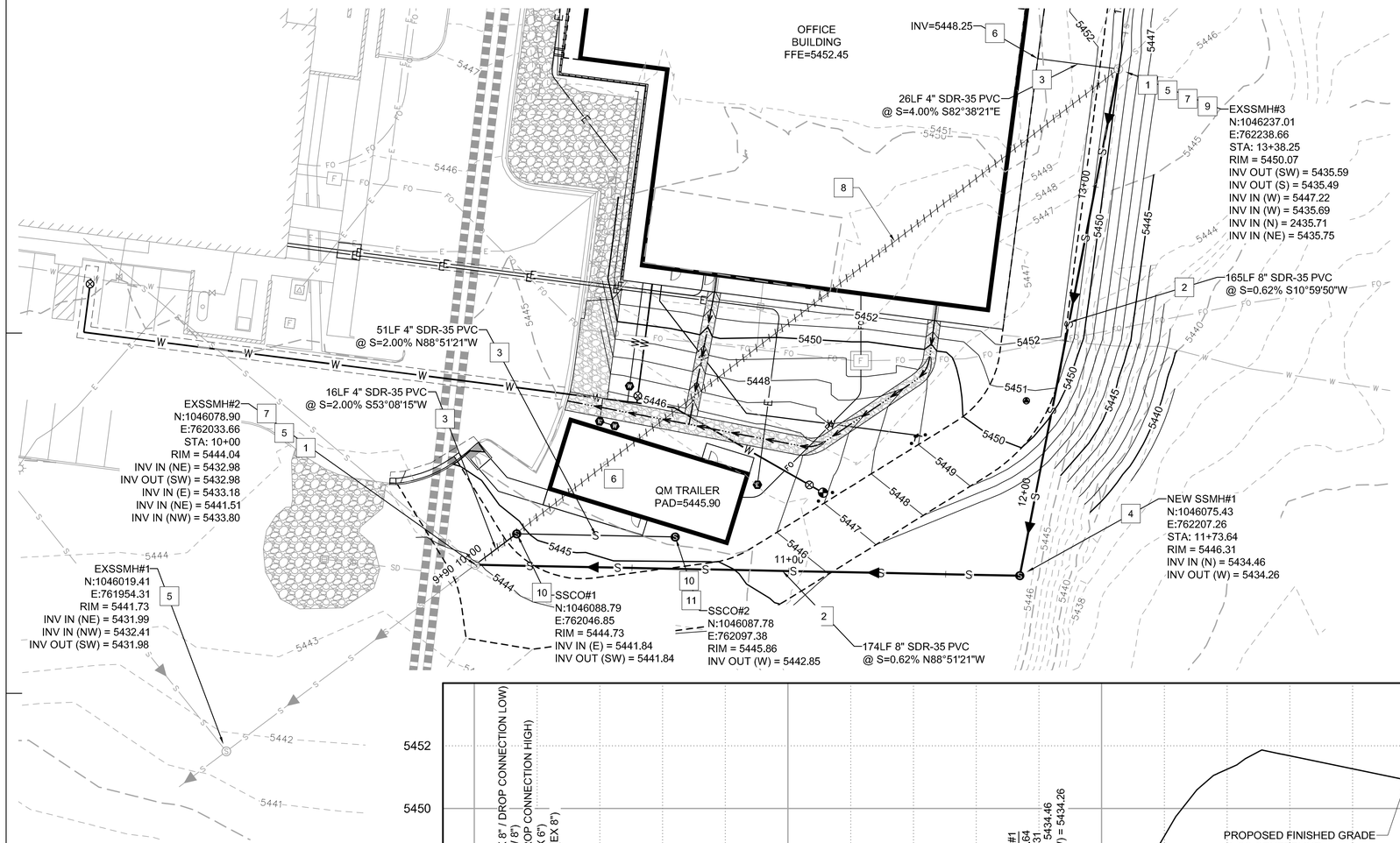

SCALE IN FEET
HORIZONTAL SCALE: 1" = 20'
CONTOUR INTERVAL = 1 FOOT
STATIONING IS ALONG SEWER LINE

SANITARY SEWER KEYNOTES

1. CONNECT TO EXISTING SANITARY SEWER MANHOLE. CONTRACTOR TO VERIFY INVERT ELEVATION PRIOR TO COMMENCING ANY WORK. CORE DRILL THROUGH MANHOLE BASE AND ESTABLISH FLOW CHANNELS TO NEW OUTLET AT EXSSMH#3 OR INLET AT EXSSMH#2. GROUT FILL ABANDONED FLOW CHANNEL AT EXSSMH#3.
2. INSTALL 8" SDR-35 PVC SANITARY SEWER LINE. LENGTH AND SLOPE PER PLAN.
3. INSTALL 4" SDR-35 PVC SANITARY SEWER LINE. LENGTH AND SLOPE PER PLAN.
4. CONSTRUCT NEW 48"Ø SANITARY SEWER MANHOLE PER MAG STD DTLS 420-1, 420-2 AND 420-3. FRAME AND COVER PER MAG STD DTL 423-1. ADJUST TO FINISH GRATE PER MAG STD DTL 422.
5. EXISTING SANITARY SEWER MANHOLE.
6. CONNECT TO BUILDING SEWER SERVICE, SEE PLUMBING PLANS IN THE BUILDING PACKAGE FOR CLEANOUT DETAILS AND CONTINUATION.
7. PROVIDE SEWER DROP CONNECTION TYPE 'B' PER MAG STD DTL 426 FOR EXSSMH#2, UTILIZE EXISTING 8" MAIN TO CONNECT DROP PORTION.
8. ABANDONED SANITARY SEWER LINE. SEE DEMOLITION PLAN FOR ADDITIONAL INFORMATION.
9. ADJUST EXISTING SANITARY SEWER MANHOLE TO NEW FINISHED GRADE PER MAG STD DTL 422.
10. INSTALL SANTIARY SEWER CLEANOUT PER DETAIL 11 ON SHEET C501.
11. ROUTE QM BUILDING SERVICE LINE TO CLEANOUT. CONNECT TO TRAILER SEWER SERVICE.

SEWER NOTES

1. THE NEW SEWER WORK SHALL BE ACCOMPLISHED WITHOUT SIGNIFICANT DISRUPTION TO THE UPSTREAM USER. THE CONTRACTOR SHALL PHASE WORK ACCORDINGLY AND SUBMIT TO THE ENGINEER AND OWNER A WORK SEQUENCE. IF SERVICE DISRUPTIONS ARE REQUIRED FOR FINAL CONNECTION, SUBMIT A DETAILED PLAN AND SCHEDULE. WORK MAY BE REQUIRED TO BE COMPLETED DURING OFF HOURS TO LIMIT DISRUPTION.
2. SEWER TESTING OF NEW WORK SHALL BE PER MAG SPECIFICATIONS.

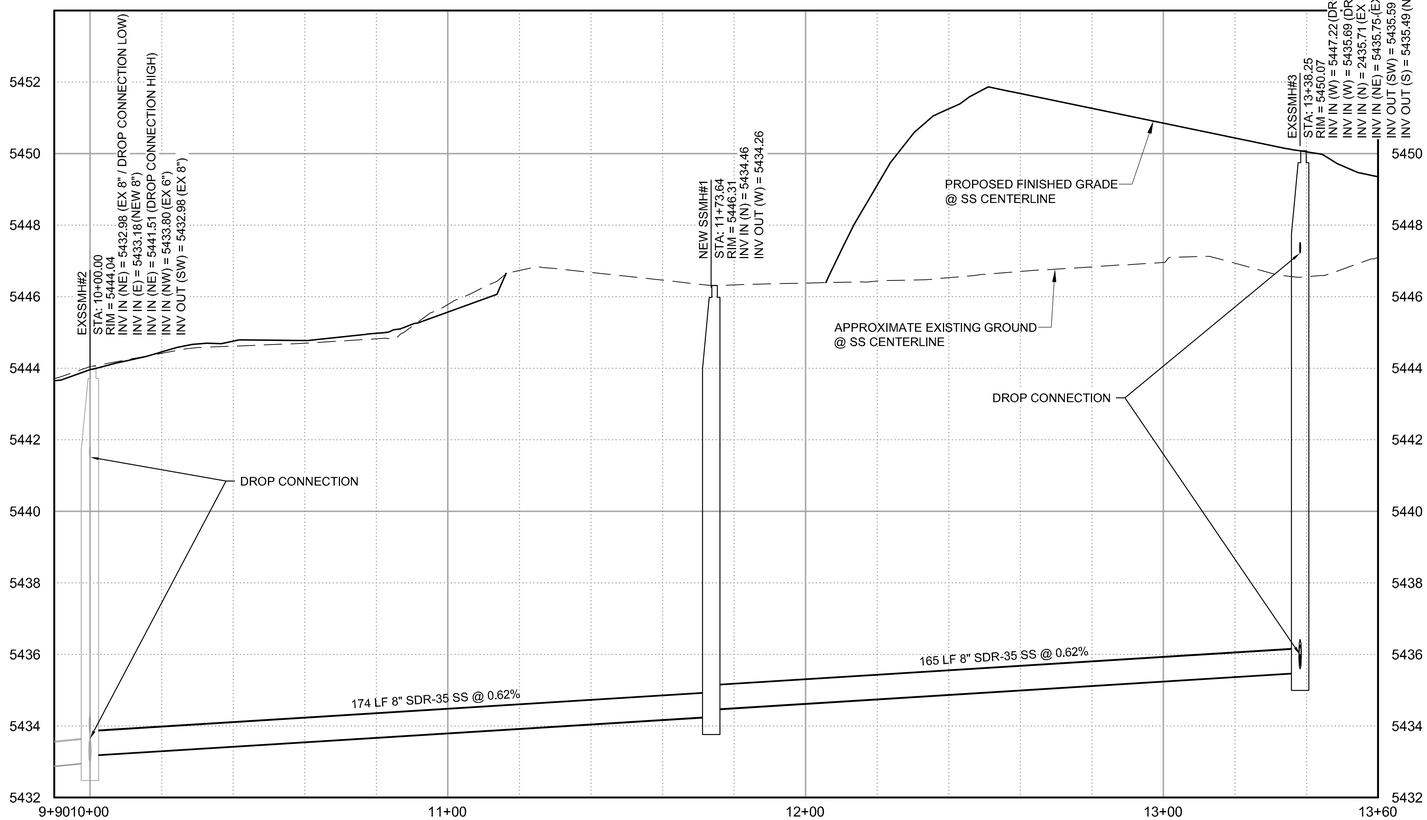

Contact Arizona 811 at least two full working days before you begin excavation
ARIZONA811 BLUE STAKE, INC.
Call 811 or click Arizona811.com

FINAL CONSTRUCTION DOCUMENTS PACKAGE

JSRa
JOHNSON SMITTHIPONG & ROSAMOND ASSOCIATES, INC.
5210 E Williams Cir • Ste 600• Tucson, AZ 85711
(520) 547-7904 • www.jsrarchinc.com

Consultants:

DOWL
WWW.DOWL.COM
430 W. Warner Road, #B101
Tempe, Arizona 85284
480-753-0800

Registered Professional Engineer (Civil) CERTIFICATE NO. 54744 ERIN R. O'BRIEN Date Signed 11/9/22 ARIZONA, U.S.A. Expires 06 / 30 / 2025

WHITERIVER ADMINISTRATION OFFICE BUILDING

200 W HOSPITAL DR
WHITERIVER, AZ 85941

HHSI102201800007I

U. S. DEPARTMENT OF HEALTH AND HUMAN SERVICES
INDIAN HEALTH SERVICE
PHOENIX AREA OFFICE

No.	Date	Description

Issue Date:	11/03/22
Project No:	3122.41629.02
Scale:	AS SHOWN
Drawn By:	EO
Checked By:	RI

FINAL CD

Sheet Title:

SANITARY SEWER PLAN AND PROFILE

Sheet Number:

C400

Autodesk Docs://2022 Whiteriver Modular/21-020.06 Arch WRMOB 2022.rvt
5/17/2021 2:51:02 PM

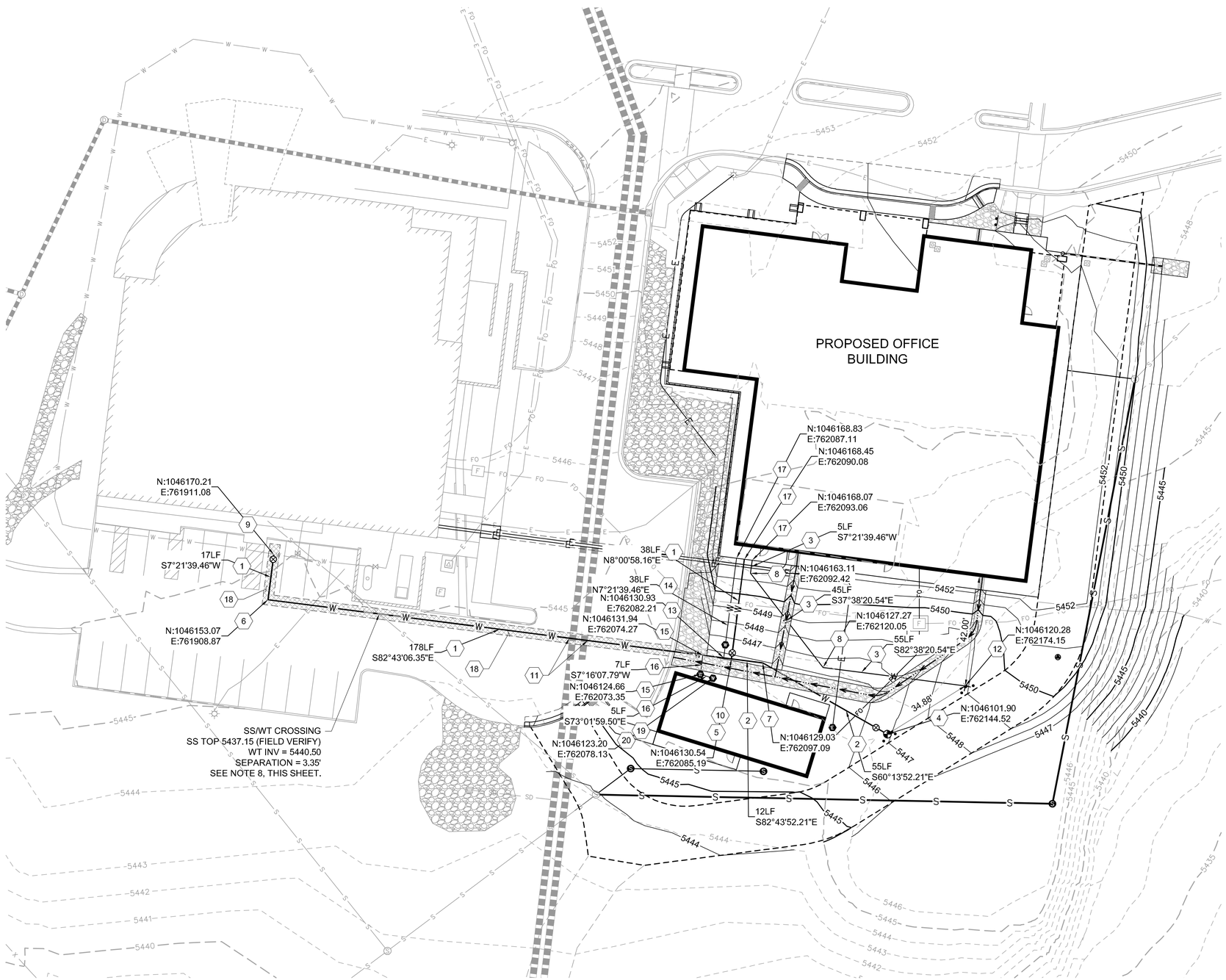

20 0 20 40
SCALE IN FEET
HORIZONTAL SCALE: 1" = 20'
CONTOUR INTERVAL = 1 FOOT

WATER KEYNOTES

1. INSTALL 6" C900 PVC WATER LINE. LENGTH AND DIRECTION PER PLAN.
2. INSTALL 6" D.I.P. FIRE HYDRANT LEAD. LENGTH AND DIRECTION PER PLAN.
3. INSTALL 4" C900 PVC WATER LINE. LENGTH AND DIRECTION PER PLAN.
4. INSTALL DRY BARREL FIRE HYDRANT ASSEMBLY WITH VALVE PER MAG STD DTL 360-1. PROVIDE TWO (2) PROTECTIVE BOLLARDS PER CITY OF PHOENIX DETAIL NO. P1359.
5. INSTALL 6" GATE VALVE WITH TYPE 'A' VALVE BOX AND COVER PER DETAIL MAG STD DTL 391-1. PROVIDE THRUST BLOCK PER MAG STD DTL 301.
6. INSTALL 6" 90° BEND WITH THRUST BLOCKS PER MAG STD DTL 380.
7. INSTALL 6" 22.5° BEND WITH THRUST BLOCKS PER MAG STD DTL 380.
8. INSTALL 4" 45° BEND WITH THRUST BLOCKS PER MAG STD DTL 380.
9. INSTALL 6"X6" TAPPING SLEEVE AND GATE VALVE PER MAG DTL 340.
10. INSTALL 6"X6"X6" TEE WITH THRUST BLOCKS PER MAG DTL 380.
11. VERTICALLY REALIGN WATER LINE TO PROVIDE 2' OF CLEARANCE BELOW STORM DRAIN PER MAG STD DTL 370. USE DUCTILE IRON PIPE.
12. REMOTE FDC PER DETAIL 6 ON SHEET F502. PROVIDE TWO (2) PROTECTIVE BOLLARDS PER CITY OF PHOENIX DETAIL NO. P1359.
13. 2" WATER SERVICE CONNECTION PER CITY OF PHOENIX DETAIL NO P1342 WITH POLYMER METER BOX PER MAG STD DTL 315. COORDINATE WITH FACILITIES FOR NEW METER TYPE.
14. INSTALL 2" SOFT TYPE K COPPER DOMESTIC WATER LINE. LENGTH AND DIRECTION PER PLAN
15. 3/4" WATER SERVICE CONNECTION PER CITY OF PHOENIX DETAIL NO P1342 WITH POLYMER METER BOX PER MAG STD DTL 315. COORDINATE WITH FACILITIES FOR NEW METER TYPE.
16. INSTALL 3/4" SOFT TYPE K COPPER DOMESTIC WATER LINE. LENGTH AND DIRECTION PER PLAN
17. REFER TO PLUMBING/FIRE PROTECTION PLANS IN THE BUILDING PACKAGE FOR CONTINUATION.
18. T-TOP TRENCH REPAIR PER MAG STD DTL 200-1
19. 3/4" REDUCED PRESSURE PRINCIPLE BACKFLOW PREVENTER PER CITY OF PHOENIX DETAIL NO P1354. PROVIDE INSIDE A HEATED ENCLOSURE, MODEL DR1H DURAFOLD BY HOT BOX. SEE ELECTRICAL PLANS FOR ELECTRIC SUPPLY.
20. REFER TO PLUMBING PLANS IN THE SITE PACKAGE FOR CONNECTION TO TRAILER WATER SERVICE.

WATER NOTES

1. WATER MAIN TRENCH PER MAG SPECIFICATIONS. PROVIDE 4.0' MINIMUM OF COVER.
2. CONTRACTOR TO COORDINATE INSTALLATION OF TAPPING SLEEVE AT EXISTING MAIN WITH FACILITY STAFF.
3. THE BACKFLOW PREVENTER FOR THE DOMESTIC AND FIRE WATER LINES FOR THE OFFICE BUILDING ARE LOCATED INSIDE OF THE BUILDING.
4. PIPE LENGTHS SHOWN ARE PLAN VIEW LENGTHS (2D).
5. FIELD VERIFY TIE IN LOCATIONS AND ELEVATIONS. NOTIFY THE ENGINEER IF LARGE DISCREPANCIES ARE FOUND.
6. TEST WATERLINES PER MAG SPECIFICATIONS.
7. ALL DUCTILE IRON PIPE AND FITTINGS SHALL BE POLYWRAPPED.
8. CONTRACTOR TO POTHOLE AND DETERMINE VERTICAL LOCATION OF THE EXISTING SANITARY SEWER SERVICE LINE. IF THE SEWER LINE IS BETWEEN 1' AND 2' BELOW THE PROPOSED WATER LINE, EXTRA PROTECTION WILL BE REQUIRED. IF THE SEWER LINE IS LESS THAN 1' BELOW THE PROPOSED WATER LINE, A VERTICAL REALIGNMENT OF THE WATER LINE WILL BE REQUIRED (WITH EXTRA PROJECTION).

Contact Arizona 811 at least two full working days before you begin excavation
ARIZONA811 BLUE STAKE, INC.
Call 811 or click Arizona811.com

FINAL CONSTRUCTION DOCUMENTS PACKAGE

JOHNSON SMITTHIPONG & ROSAMOND ASSOCIATES, INC.
5210 E Williams Cir • Ste 600• Tucson, AZ 85711
(520) 547-7904 • www.jsrarchinc.com

Consultants:

DOWL
WWW.DOWL.COM
430 W. Warner Road, #B101
Tempe, Arizona 85284
480-753-0800

Registered Professional Engineer (Civil) CERTIFICATE NO. 54744 ERIN R. O'BRIEN Date Signed 11/3/22 ARIZONA, U.S.A.
Expires 06 / 30 / 2025

WHITERIVER ADMINISTRATION OFFICE BUILDING

200 W HOSPITAL DR
WHITERIVER, AZ 85941

HHSI102201800007I

U. S. DEPARTMENT OF HEALTH AND HUMAN SERVICES
INDIAN HEALTH SERVICE
PHOENIX AREA OFFICE

No.	Date	Description

Issue Date:	11/03/22
Project No:	3122.41629.02
Scale:	AS SHOWN
Drawn By:	EO
Checked By:	RI

FINAL CD

Sheet Title:

WATER PLAN

Sheet Number:

C401

Autodesk Docs://2022 Whiteriver Modular/21-020 06 Arch WRMOB 2022.rvt
5/17/2021 2:51:02 PM

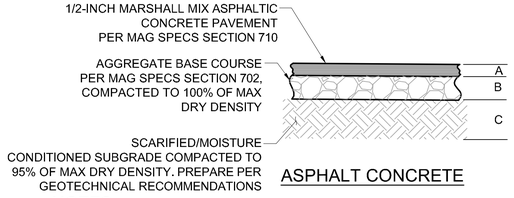

ASPHALT CONCRETE

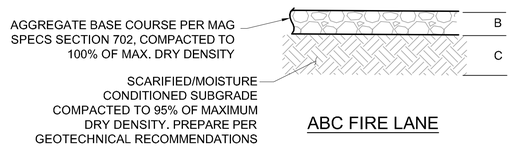

ABC FIRE LANE

NOTES

1. COMPACTION AND DEPTH OF SECTIONS IN TABLE SHALL BE CONFIRMED WITH LATEST GEOTECHNICAL REPORT.
2. CONSTRUCT ASPHALT CONCRETE PAVEMENT PER MAG SPECS SECTION 321.
3. CONSTRUCT AGGREGATE BASE COURSE PER MAG SPECS SECTION 310.
4. PREPARE SUBGRADE PER MAG SPECS SECTION 301 AND GEOTECHNICAL RECOMMENDATIONS.
5. USE PG 64-28 ASPHALT GRADE BINDER.

	SECTION DEPTH (INCHES)		
TYPE	A	B	C
AC SECTION	3	8	*
ABC FIRE LANE SECTION	-	8	*

* PER GEOTECHNICAL RECOMMENDATIONS

1 C500 DETAIL - PAVEMENT SECTIONS
NTS

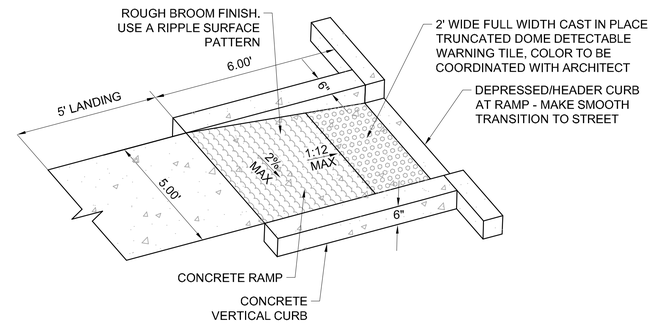

2 C500 DETAIL - CURB ACCESS RAMP TYPE 1
NTS

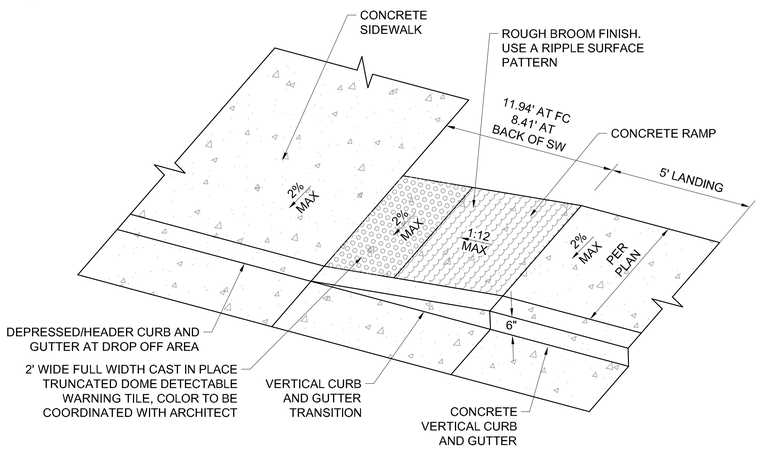

3 C500 DETAIL - CURB ACCESS RAMP TYPE 2
NTS

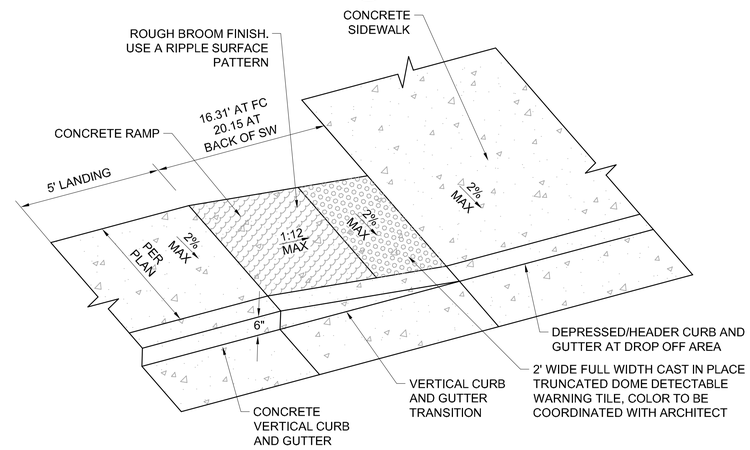

4 C500 DETAIL - CURB ACCESS RAMP TYPE 3
NTS

NOTES:

1. TOP OF RIPRAP TO BE AT FLOWLINE OR GRADE AS INDICATED ON PLAN (WITHIN VARIANCE GIVEN). RIPRAP PLACED ABOVE FINAL GRADE WILL NOT BE ACCEPTED.
2. RIPRAP SHALL BE ANGULAR AND SHALL NOT EXCEED 3:1 RATIO FOR FLAT AND ELONGATED PIECES (ASTM D4791). RIVER ROCK WILL NOT BE ACCEPTED.
3. INSTALL FILTER FABRIC PER MANUFACTURERS RECOMMENDATIONS.
4. RIP-RAP CONSTRUCTION PER MAG SPECIFICATIONS SECTION 220.
5. RIPRAP COLOR TO BE COORDINATED WITH ARCHITECT.

ROCK RIPRAP GRADATION

SIZE	PERCENT FINER
$0.2D_{50}$	0
$0.5D_{50}$	15
$0.75D_{50}$	30
$1.0D_{50}$	50
$1.5D_{50}$	95
$2.0D_{50}$	100

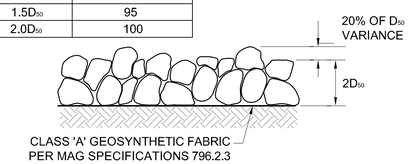

HAND-PLACED

5 C500 DETAIL - RIPRAP PLACEMENT
NTS

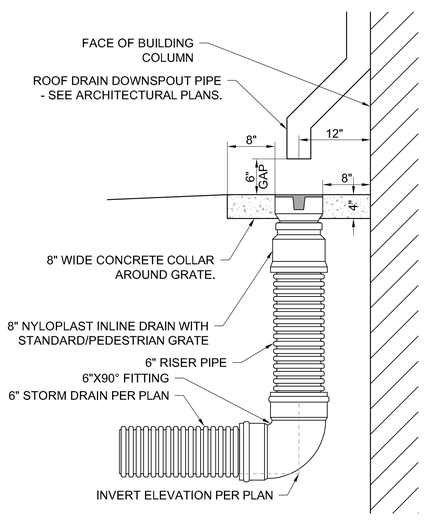

6 C500 DETAIL - INLINE DRAIN AT ROOF DRAIN DOWNSPOUT LOCATION
NTS

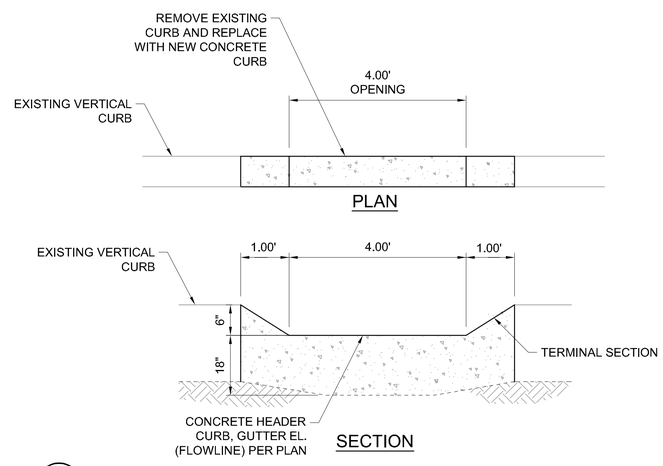

7 C500 DETAIL - CURB OPENING
NTS

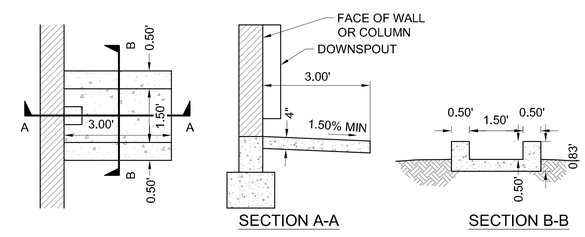

8 C500 DETAIL - ROOF DRAIN DISCHARGE SPLASH PAD
NTS

FINAL CONSTRUCTION DOCUMENTS PACKAGE

JOHNSON SMITTHIPONG & ROSAMOND ASSOCIATES, INC.
5210 E Williams Cir • Ste 600• Tucson, AZ 85711
(520) 547-7904 • www.jsrarchinc.com

Consultants:

DOWL
WWW.DOWL.COM
430 W. Warner Road, #B101
Tempe, Arizona 85284
480-753-0800

Registered Professional Engineer (Civil) CERTIFICATE NO. 54744 ERIN R. O'BRIEN Date Signed 11/9/22 ARIZONA, U.S.A. Expires 06 / 30 / 2025

WHITERIVER ADMINISTRATION OFFICE BUILDING

200 W HOSPITAL DR
WHITERIVER, AZ 85941

HHSI1022018800007I

U. S. DEPARTMENT OF HEALTH AND HUMAN SERVICES
INDIAN HEALTH SERVICE
PHOENIX AREA OFFICE

No.	Date	Description

Issue Date:	11/03/22
Project No:	3122.41629.02
Scale:	AS SHOWN
Drawn By:	EO
Checked By:	RI

FINAL CD

Sheet Title:

DETAILS

Sheet Number:

C500

Autodesk Docs://2022 Whiteriver Modular/21-020 06 Arch WRMOB 2022.rvt
5/17/2021 2:51:02 PM

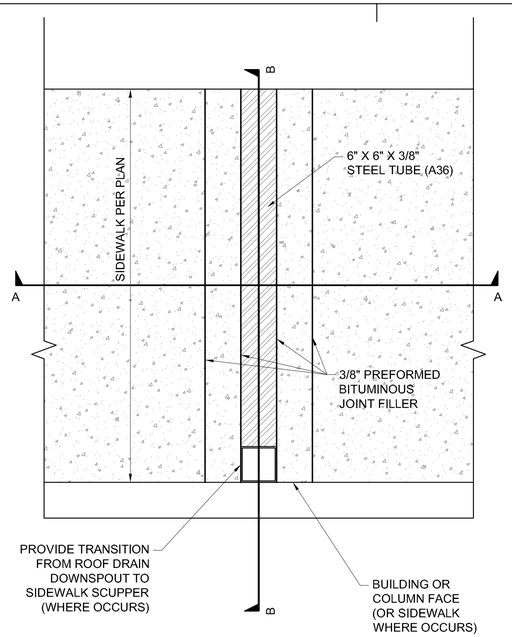

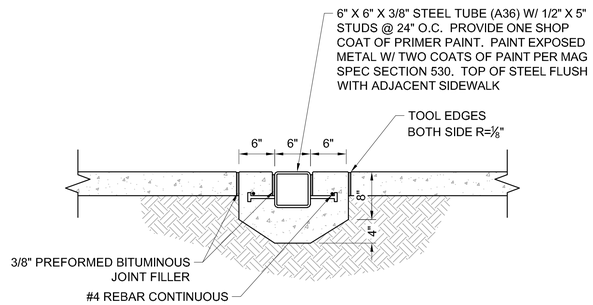

SECTION A-A

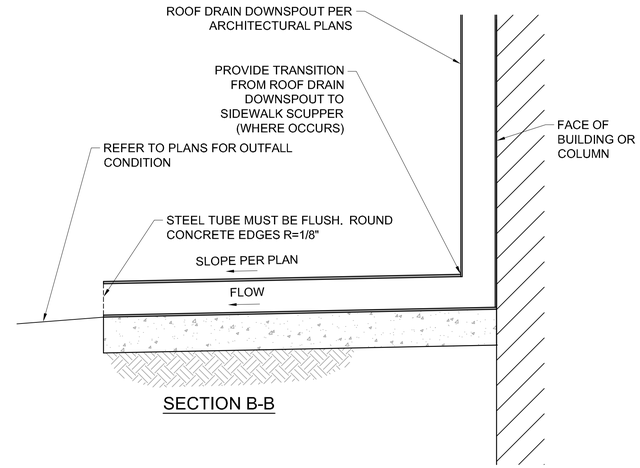

SECTION B-B

9 C501 DETAIL - SIDEWALK SCUPPER
NTS

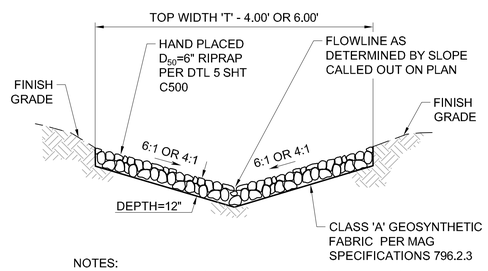

NOTES:
1. FILTER FABRIC NOT PROPERLY ANCHORED AND RIPRAP NOT PROPERLY PLACED WILL BE REJECTED.
2. 4:1 SLOPE FOR 4' WIDE SWALE
3. 6:1 SLOPE FOR 6' SWALE

10 C501 DETAIL - RIPRAP SWALE
NTS

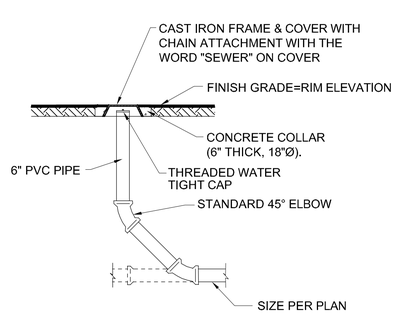

11 C501 DETAIL - SANITARY SEWER CLEANOUT
NTS

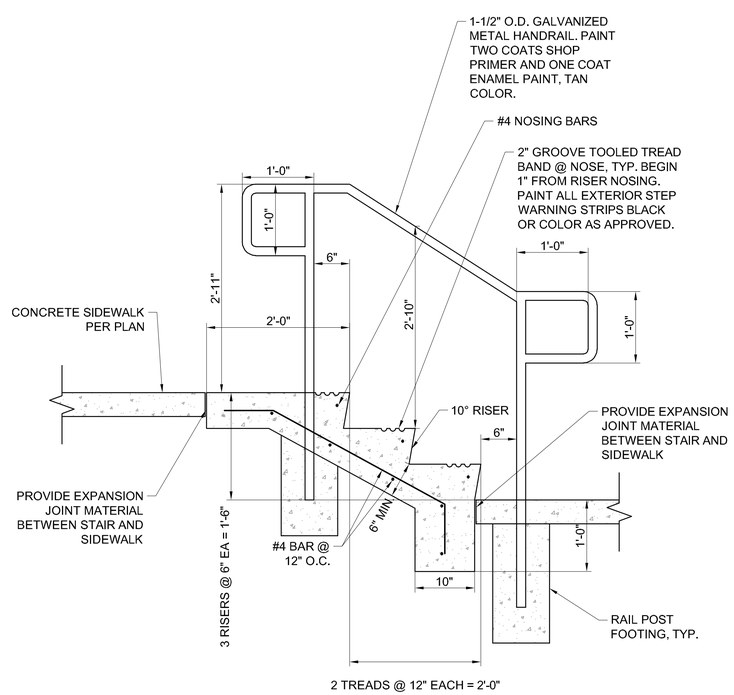

NOTES:
1. PROVIDE MEDIUM BROOM FINISH AT STEPS.
2. PREPARE SUBGRADE PER GEOTECHNICAL REPORT RECOMMENDATIONS.
3. USE CLASS 'A' CONCRETE, 3,000 PSI PER MAG SPEC 725.

12 C501 DETAIL - SITE STAIRS
NTS

FINAL CONSTRUCTION DOCUMENTS PACKAGE

JOHNSON SMITTHIPONG & ROSAMOND ASSOCIATES, INC.
5210 E Williams Cir • Ste 600• Tucson, AZ 85711
(520) 547-7904 • www.jsrarchinc.com

Consultants:

DOWL
WWW.DOWL.COM
430 W. Warner Road, #B101
Tempe, Arizona 85284
480-753-0800

Registered Professional Engineer (Civil) CERTIFICATE NO. 54744 ERIN R. O'BRIEN Date Signed 11/9/22 ARIZONA, U.S.A. Expires 06 / 30 / 2025

WHITERIVER ADMINISTRATION OFFICE BUILDING

200 W HOSPITAL DR
WHITERIVER, AZ 85941

HHSI102201800007I

U. S. DEPARTMENT OF HEALTH AND HUMAN SERVICES
INDIAN HEALTH SERVICE
PHOENIX AREA OFFICE

No.	Date	Description

Issue Date:	11/03/22
Project No:	3122.41629.02
Scale:	AS SHOWN
Drawn By:	EO
Checked By:	RI

FINAL CD

Sheet Title:

DETAILS

Sheet Number:

C501

Autodesk Docs://2022 Whiteriver Modular/21-020 06 Arch WRMOB 2022.rvt
5/17/2021 2:51:02 PM

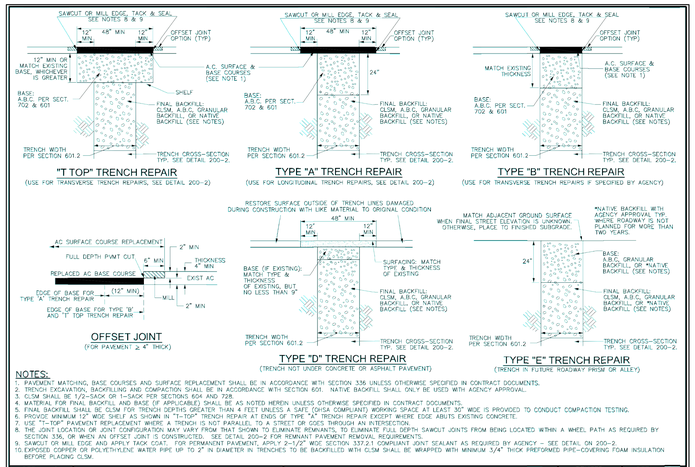

NOTES:

1. PAVEMENT MATCHING, BASE COURSES AND SURFACE REPLACEMENT SHALL BE IN ACCORDANCE WITH SECTION 336 UNLESS OTHERWISE SPECIFIED IN CONTRACT DOCUMENTS.
2. TRENCH EXCAVATION, BACKFILLING AND COMPACTION SHALL BE IN ACCORDANCE WITH SECTION 601. NATIVE BACKFILL SHALL ONLY BE USED WITH AGENCY APPROVAL.
3. CLSM SHALL BE 1/2-SACK OR 1-SACK PER SECTIONS 604 AND 728.
4. MATERIAL FOR FINAL BACKFILL AND BASE (IF APPLICABLE) SHALL BE AS NOTED HEREIN UNLESS OTHERWISE SPECIFIED IN CONTRACT DOCUMENTS.
5. FINAL BACKFILL SHALL BE CLSM FOR TRENCH DEPTHS GREATER THAN 4 FEET UNLESS A SAFE (OSHA COMPLIANT) WORKING SPACE AT LEAST 30" WIDE IS PROVIDED TO CONDUCT COMPACTION TESTING.
6. PROVIDE MINIMUM 12" WIDE SHELF AS SHOWN IN "T-TOP" TRENCH REPAIR AT ENDS OF TYPE "A" TRENCH REPAIR EXCEPT WHERE EDGE ABUTS EXISTING CONCRETE.
7. USE "T-TOP" PAVEMENT REPLACEMENT WHERE A TRENCH IS NOT PARALLEL TO A STREET OR GOES THROUGH AN INTERSECTION.
8. THE JOINT LOCATION OR JOINT CONFIGURATION MAY VARY FROM THAT SHOWN TO ELIMINATE REMNANTS, TO ELIMINATE FULL DEPTH SAWCUT JOINTS FROM BEING LOCATED WITHIN A WHEEL PATH AS REQUIRED BY SECTION 336, OR WHEN AN OFFSET JOINT IS CONSTRUCTED. SEE DETAIL 200-2 FOR REMNANT PAVEMENT REMOVAL REQUIREMENTS.
9. SAWCUT OR MILL EDGE AND APPLY TACK COAT. FOR PERMANENT PAVEMENT, APPLY 2-1/2" WIDE SECTION 537.2.1 COMPLIANT JOINT SEALANT AS REQUIRED BY AGENCY - SEE DETAIL ON 200-2.
10. EXPOSED COPPER OR POLYETHYLENE WATER PIPE UP TO 2" IN DIAMETER IN TRENCHES TO BE BACKFILLED WITH CLSM SHALL BE WRAPPED WITH MINIMUM 3/4" THICK PREFORMED PIPE-COVERING FOAM INSULATION BEFORE PLACING CLSM.

DETAIL NO.	STANDARD DETAIL		REVISED	DETAIL NO.
200-1	MARICOPA ASSOCIATION of GOVERNMENTS	ENGLISH	TRENCH BACKFILL AND SURFACE REPLACEMENT	01-01-2020	200-1

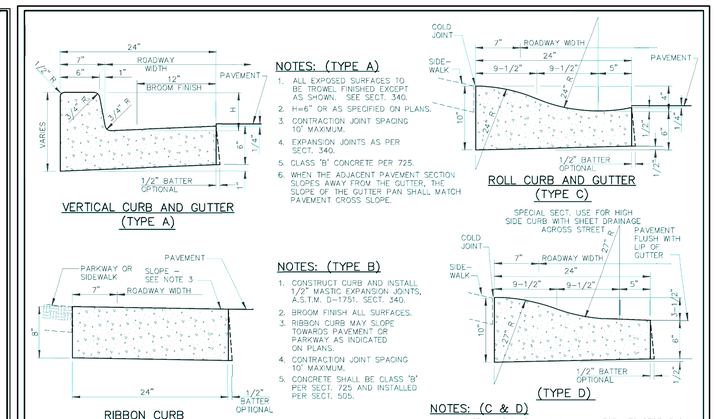

NOTES: (TYPE A)

1. ALL EXPOSED SURFACES TO BE TROWEL FINISHED EXCEPT AS SHOWN. SEE SECT. 340.
2. H=6" OR AS SPECIFIED ON PLANS.
3. CONTRACTION JOINT SPACING 10' MAXIMUM.
4. EXPANSION JOINTS AS PER SECT. 340.
5. CLASS "B" CONCRETE PER 725.
6. WHEN THE ADJACENT PAVEMENT SECTION SLOPES AWAY FROM THE GUTTER, THE SLOPE OF THE GUTTER PAN SHALL MATCH PAVEMENT CROSS SLOPE.

NOTES: (TYPE B)

1. CONSTRUCT CURB AND INSTALL 1/2" MASTIC EXPANSION JOINTS, A.S.T.M. D-1751, SECT. 340.
2. BROOM FINISH ALL SURFACES.
3. RIBBON CURB MAY SLOPE TOWARDS PAVEMENT OR PARKWAY AS INDICATED ON PLANS.
4. CONTRACTION JOINT SPACING 10' MAXIMUM.
5. CONCRETE SHALL BE CLASS 'B' PER SECT. 725 AND INSTALLED PER SECT. 505.

NOTES: (C & D)

1. ALL WORK AND MATERIALS SHALL CONFORM TO SECT. 340, 505 AND 725. BROOM FINISH TO EXPOSED SURFACE.
2. CONTRACTION JOINT SPACING 10' MAXIMUM.
3. EXPANSION JOINTS AS PER SECT. 340.
4. CLASS 'B' CONCRETE PER 725.

DETAIL NO.	STANDARD DETAIL		REVISED	DETAIL NO.
220-1	MARICOPA ASSOCIATION of GOVERNMENTS	ENGLISH	CURB AND GUTTER TYPES A, B, C AND D	01-01-2021	220-1

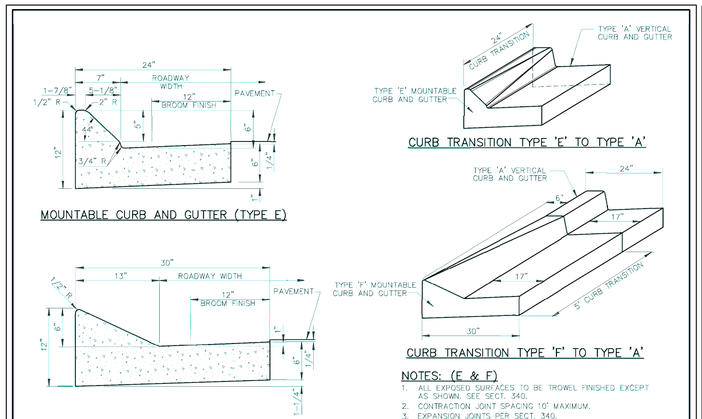

NOTES: (E & F)

1. ALL EXPOSED SURFACES TO BE TROWEL FINISHED EXCEPT AS SHOWN. SEE SECT. 340.
2. CONTRACTION JOINT SPACING 10' MAXIMUM.
3. EXPANSION JOINTS PER SECT. 340.
4. CLASS 'B' CONCRETE PER SECT. 725.
5. WHEN THE ADJACENT PAVEMENT SECTION SLOPES AWAY FROM THE GUTTER, THE SLOPE OF THE GUTTER PAN SHALL MATCH THE PAVEMENT CROSS SLOPE.

DETAIL NO.	STANDARD DETAIL		REVISED	DETAIL NO.
220-2	MARICOPA ASSOCIATION of GOVERNMENTS	ENGLISH	CURB AND GUTTER TYPES E AND F	01-01-2007	220-2

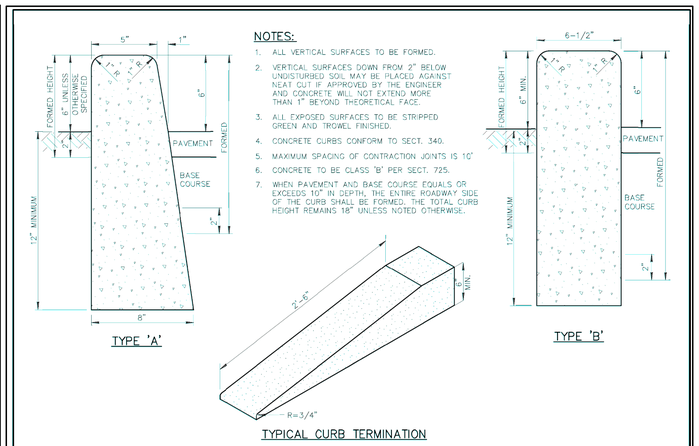

NOTES:

1. ALL VERTICAL SURFACES TO BE FORMED.
2. VERTICAL SURFACES DOWN FROM 2" BELOW UNDISTURBED SOIL MAY BE PLACED AGAINST NEAT CUT IF APPROVED BY THE ENGINEER AND CONCRETE WILL NOT EXTEND MORE THAN 1" BEYOND THEORETICAL FACE.
3. ALL EXPOSED SURFACES TO BE STRIPPED GREEN AND TROWEL FINISHED.
4. CONCRETE CURBS CONFORM TO SECT. 340.
5. MAXIMUM SPACING OF CONTRACTION JOINTS IS 10'.
6. CONCRETE TO BE CLASS 'B' PER SECT. 725.
7. WHEN PAVEMENT AND BASE COURSE EQUALS OR EXCEEDS 10" IN DEPTH, THE ENTIRE ROADWAY SIDE OF THE CURB SHALL BE FORMED. THE TOTAL CURB HEIGHT REMAINS 18" UNLESS NOTED OTHERWISE.

DETAIL NO.	STANDARD DETAIL		REVISED	DETAIL NO.
222	MARICOPA ASSOCIATION of GOVERNMENTS	ENGLISH	SINGLE CURB – TYPES A, B AND TERMINATION	01-01-2008	222

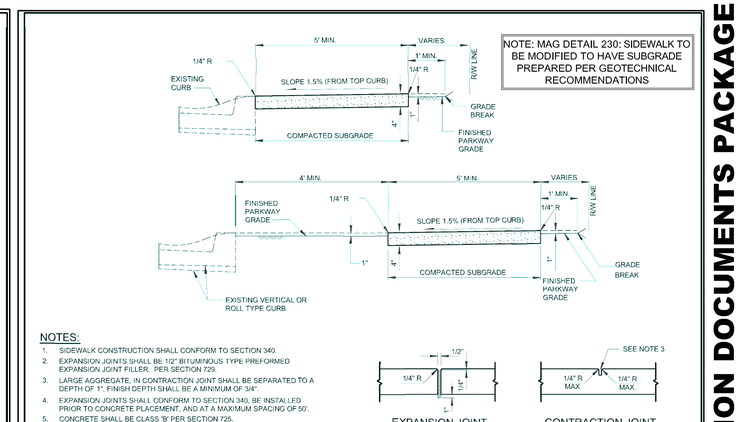

NOTES:

1. SIDEWALK CONSTRUCTION SHALL CONFORM TO SECTION 340.
2. EXPANSION JOINTS SHALL BE 1/2" BITUMINOUS TYPE PREFORMED EXPANSION JOINT FILLER. PER SECTION 729.
3. LARGE AGGREGATE, IN CONTRACTION JOINT SHALL BE SEPARATED TO A DEPTH OF 1". FINISH DEPTH SHALL BE A MINIMUM OF 3/4".
4. EXPANSION JOINTS SHALL CONFORM TO SECTION 340, BE INSTALLED PRIOR TO CONCRETE PLACEMENT, AND AT A MAXIMUM SPACING OF 50'.
5. CONCRETE SHALL BE CLASS 'B' PER SECTION 725.
6. WHEN SIDEWALK AND ADJACENT CURB ARE CONSTRUCTED MONOLITHICALLY, ALL EXPANSION AND CONTRACTION JOINTS SHALL EXTEND ACROSS THE CURB.

DETAIL NO.	STANDARD DETAIL		REVISED	DETAIL NO.
230	MARICOPA ASSOCIATION of GOVERNMENTS	ENGLISH	SIDEWALKS	01-01-2014	230

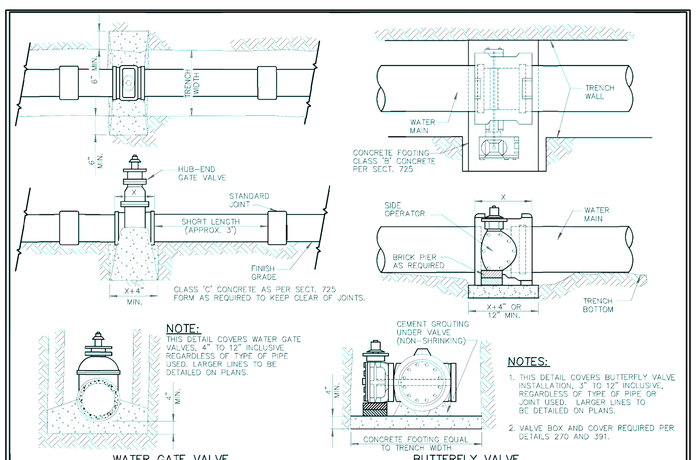

NOTE:
THIS DETAIL COVERS WATER GATE VALVES, 4" TO 12" INCLUSIVE, REGARDLESS OF TYPE OF PIPE USED. LARGER LINES TO BE DETAILED ON PLANS.

NOTES:

1. THIS DETAIL COVERS BUTTERFLY VALVE INSTALLATION, 3" TO 12" INCLUSIVE, REGARDLESS OF TYPE OF PIPE OR JOINT USED. LARGER LINES TO BE DETAILED ON PLANS.
2. VALVE BOX AND COVER REQUIRED PER DETAILS 270 AND 391.

DETAIL NO.	STANDARD DETAIL		REVISED	DETAIL NO.
301	MARICOPA ASSOCIATION of GOVERNMENTS	ENGLISH	BLOCKING FOR WATER GATE AND BUTTERFLY VALVES	01-01-1998	301

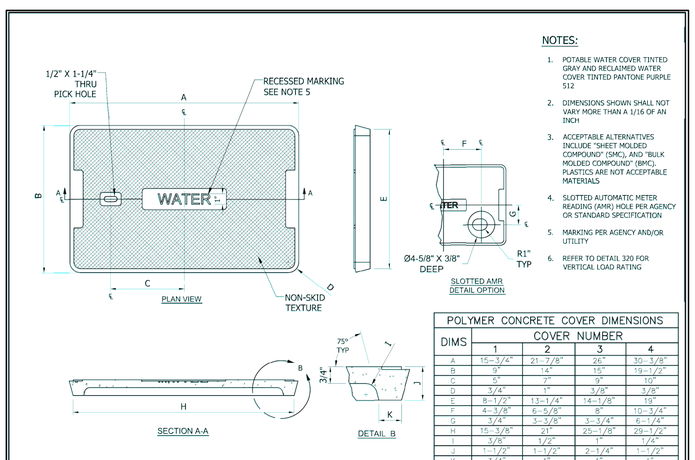

NOTES:

1. POTABLE WATER COVER TINTED GRAY AND RECLAIMED WATER COVER TINTED PANTONE PURPLE 512
2. DIMENSIONS SHOWN SHALL NOT VARY MORE THAN A 1/16 OF AN INCH
3. ACCEPTABLE ALTERNATIVES INCLUDE "SHEET MOLDED COMPOUND" (SMC), AND "BULK MOLDED COMPOUND" (BMC). PLASTICS ARE NOT ACCEPTABLE MATERIALS
4. SLOTTED AUTOMATIC METER READING (AMR) HOLE PER AGENCY OR STANDARD SPECIFICATION
5. MARKING PER AGENCY AND/OR UTILITY
6. REFER TO DETAIL 320 FOR VERTICAL LOAD RATING

POLYMER CONCRETE COVER DIMENSIONS

DIMS	COVER NUMBER 1	2	3	4
A	15-3/4"	21-7/8"	26"	30-3/8"
B	9"	14"	15"	19-1/2"
C	5"	7"	9"	10"
D	3/4"	1"	3/8"	3/8"
E	8-1/2"	13-1/4"	14-1/8"	19"
F	4-3/8"	6-5/8"	8"	10-3/4"
G	3/4"	3-3/8"	3-3/4"	6-1/4"
H	15-3/8"	21"	25-1/8"	29-1/2"
I	3/8"	1/2"	1"	1/2"
J	1-1/2"	1-1/2"	2-1/4"	1-1/2"
K	3/4"	1"	1"	1"

DETAIL NO.	STANDARD DETAIL		REVISED	DETAIL NO.
315	MARICOPA ASSOCIATION of GOVERNMENTS	ENGLISH	POLYMER CONCRETE WATER METER BOX COVER	01-01-2017	315

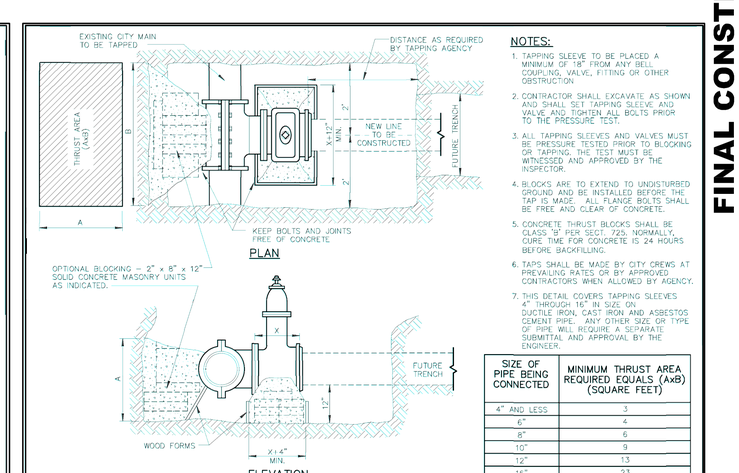

NOTES:

1. TAPPING SLEEVE TO BE PLACED A MINIMUM OF 18" FROM ANY BELL, COUPLING, VALVE, FITTING OR OTHER OBSTRUCTION.
2. CONTRACTOR SHALL EXCAVATE AS SHOWN AND SHALL SET TAPPING SLEEVE AND VALVE AND TIGHTEN ALL BOLTS PRIOR TO THE PRESSURE TEST.
3. ALL TAPPING SLEEVES AND VALVES MUST BE PRESSURE TESTED PRIOR TO BLOCKING OR TAPPING. THE TEST MUST BE WITNESSED AND APPROVED BY THE INSPECTOR.
4. BLOCKS ARE TO EXTEND TO UNDISTURBED GROUND AND BE INSTALLED BEFORE THE TAP IS MADE. ALL FLANGE BOLTS SHALL BE FREE AND CLEAR OF CONCRETE.
5. CONCRETE THRUST BLOCKS SHALL BE CLASS "B" PER SECT. 725. NORMALLY, CURE TIME FOR CONCRETE IS 24 HOURS BEFORE BACKFILLING.
6. TAPS SHALL BE MADE BY CITY CREWS AT PREVAILING RATES OR BY APPROVED CONTRACTORS WHEN ALLOWED BY AGENCY.
7. THIS DETAIL COVERS TAPPING SLEEVES 4" THROUGH 16" IN SIZE ON DUCTILE IRON, CAST IRON AND ASBESTOS CEMENT PIPE. ANY OTHER SIZE OR TYPE OF PIPE WILL REQUIRE A SEPARATE SUBMITTAL AND APPROVAL BY THE ENGINEER.

SIZE OF PIPE BEING CONNECTED	MINIMUM THRUST AREA REQUIRED EQUALS (AxB) (SQUARE FEET)
4" AND LESS	3
6"	4
8"	6
10"	9
12"	13
16"	23

DETAIL NO.	STANDARD DETAIL		REVISED	DETAIL NO.
340	MARICOPA ASSOCIATION of GOVERNMENTS	ENGLISH	INSTALLING TAPPING SLEEVES AND VALVES	01-03-2002	340

FINAL CONSTRUCTION DOCUMENTS PACKAGE

JSRa
JOHNSON SMITTHIPONG & ROSAMOND ASSOCIATES, INC.
5210 E Williams Cir • Ste 600• Tucson, AZ 85711
(520) 547-7904 • www.jsrarchinc.com

Consultants:

DOWL
WWW.DOWL.COM
430 W. Warner Road, #B101
Tempe, Arizona 85284
480-753-0800

Registered Professional Engineer (Civil) CERTIFICATE NO. 54744 ERIN R. O'BRIEN Date Signed 11/03/22 ARIZONA, U.S.A. Expires 06/30/2025

WHITERIVER ADMINISTRATION OFFICE BUILDING

200 W HOSPITAL DR
WHITERIVER, AZ 85941

HHSI1022018800071

U. S. DEPARTMENT OF HEALTH AND HUMAN SERVICES
INDIAN HEALTH SERVICE
PHOENIX AREA OFFICE

No.	Date	Description

Issue Date:	11/03/22
Project No:	3122.41629.02
Scale:	AS SHOWN
Drawn By:	EO
Checked By:	RI

FINAL CD

Sheet Title:

MAG STANDARD DETAILS

Sheet Number:

C502

Autodesk Docs://2022 Whiteriver Modular/21-020 06 Arch WRMOB 2022.rvt
5/17/2021 2:51:02 PM

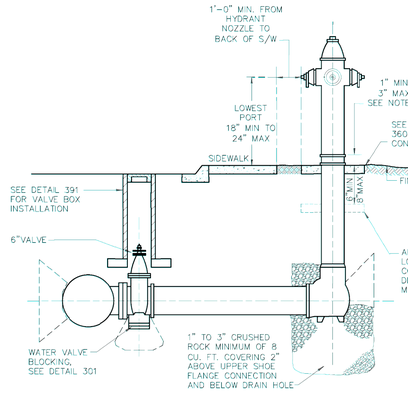

NOTES:

1. JOINTS BETWEEN THE VALVE AND THE MAIN SHALL BE FLANGED TYPE. JOINTS BETWEEN THE VALVE AND HYDRANT SHALL BE RESTRAINT OR MECHANICAL TYPE.
2. RESTRAINTS SHALL BE MECHANICAL RESTRAINT OR THRUST BLOCK PER DETAIL 380.
3. A FLANGE JOINT BY MECHANICAL JOINT VALVE SHALL BE USED AS THE TRANSITION BETWEEN THE JOINT TYPES.
4. PIPING BETWEEN WATER VALVE AND HYDRANT SHALL BE DUCTILE IRON.
5. SEE DETAIL 362 FOR LOCATION OF HYDRANT.
6. PUMPER CONNECTION SHALL FACE THE STREET.
7. NO VALVES ARE TO BE LOCATED IN CURB.
8. NATIONAL STANDARD THREADS REQUIRED ON ALL CONNECTIONS UNLESS OTHERWISE DIRECTED.
9. SEE DETAIL 360-3 FOR CONCRETE PAD.
10. CONTRACTOR TO VERIFY CORRECT COLOR WITH AGENCY REQUIREMENTS. ALL NEW FIRE HYDRANTS SHALL BE FACTORY PAINTED ONLY AND IN NEW CONDITION. ANY NEW OR RELOCATED FIRE HYDRANTS REQUIRING PAINT TOUCH-UP SHALL BE DONE USING THE MANUFACTURER'S SPECIFIED SYSTEM AND INSTRUCTIONS.
11. SEE SECTION 756 FOR HYDRANT MATERIAL.

DETAIL NO.	MARICOPA ASSOCIATION of GOVERNMENTS	STANDARD DETAIL ENGLISH	DRY BARREL FIRE HYDRANT INSTALLATION	REVISED	DETAIL NO.
360-1				01-01-2019	360-1

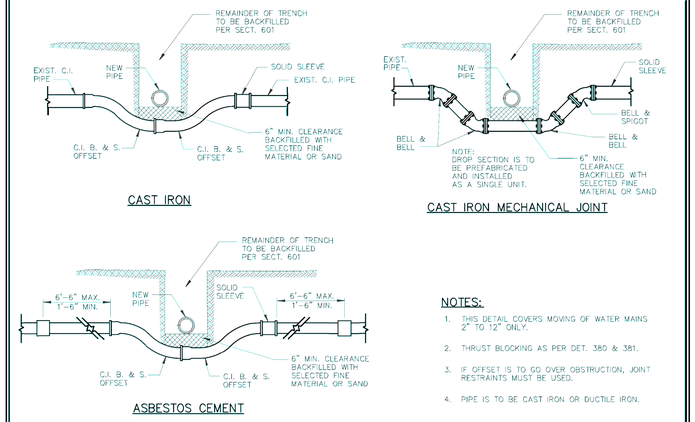

NOTES:

1. THIS DETAIL COVERS MOVING OF WATER MAINS 2" TO 12" ONLY.
2. THRUST BLOCKING AS PER DET. 380 & 381.
3. IF OFFSET IS TO GO OVER OBSTRUCTION, JOINT RESTRAINTS MUST BE USED.
4. PIPE IS TO BE CAST IRON OR DUCTILE IRON.

DETAIL NO.	MARICOPA ASSOCIATION of GOVERNMENTS	STANDARD DETAIL ENGLISH	VERTICAL REALIGNMENT OF WATER MAINS	REVISED	DETAIL NO.
370				01-01-1998	370

TYPICAL LOCATIONS OF THRUST BLOCKS

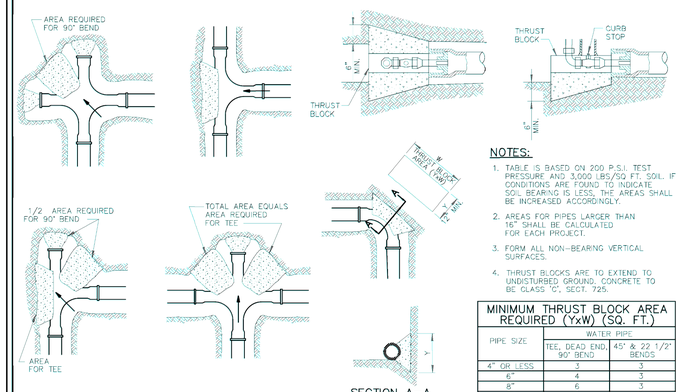

NOTES:

1. TABLE IS BASED ON 200 P.S.I. TEST PRESSURE AND 3,000 LBS/SQ FT. SOIL. IF CONDITIONS ARE FOUND TO INDICATE SOIL BEARING IS LESS, THE AREAS SHALL BE INCREASED ACCORDINGLY.
2. AREAS FOR PIPES LARGER THAN 16" SHALL BE CALCULATED FOR EACH PROJECT.
3. FORM ALL NON-BEARING VERTICAL SURFACES.
4. THRUST BLOCKS ARE TO EXTEND TO UNDISTURBED GROUND. CONCRETE TO BE CLASS "C", SECT. 725.

MINIMUM THRUST BLOCK AREA REQUIRED (YxW) (SQ. FT.)

PIPE SIZE	WATER PIPE	
	TEE, DEAD END & 90° BEND	45° & 22 1/2° BENDS
4" OR LESS	3	3
6"	4	3
8"	6	3
10"	10	5
12"	14	7
16"	24	12

DETAIL NO.	MARICOPA ASSOCIATION of GOVERNMENTS	STANDARD DETAIL ENGLISH	THRUST BLOCKS FOR WATER LINES	REVISED	DETAIL NO.
380				01-01-1998	380

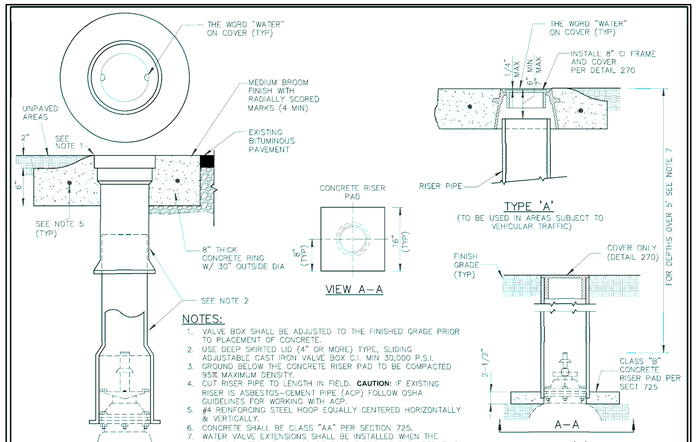

NOTES:

1. VALVE BOX SHALL BE ADJUSTED TO THE FINISHED GRADE PRIOR TO PLACEMENT OF CONCRETE.
2. USE DEEP SKIRTED LID (4" OR MORE) TYPE, SLIDING ADJUSTABLE CAST IRON VALVE BOX C.I. MIN 30,000 P.S.I.
3. GROUND BELOW THE CONCRETE RISER PAD TO BE COMPACTED 95% MAXIMUM DENSITY.
4. CUT RISER PIPE TO LENGTH IN FIELD. **CAUTION:** IF EXISTING RISER IS ASBESTOS-CEMENT PIPE (ACP) FOLLOW OSHA GUIDELINES FOR WORKING WITH ACP.
5. #4 REINFORCING STEEL HOOP EQUALLY CENTERED HORIZONTALLY & VERTICALLY.
6. CONCRETE SHALL BE CLASS "AA" PER SECTION 725.
7. WATER VALVE EXTENSIONS SHALL BE INSTALLED WHEN THE DIMENSION FROM FINISH GRADE TO THE TOP OF THE OPERATING NUT EXCEEDS 5 FEET. SEE DETAIL 393 FOR VALVE EXTENSION.

DETAIL NO.	MARICOPA ASSOCIATION of GOVERNMENTS	STANDARD DETAIL ENGLISH	VALVE BOX INSTALLATION AND GRADE ADJUSTMENT	REVISED	DETAIL NO.
391-1				01-01-2018	391-1

TYPE 'A' TOP

(PRECAST ECCENTRIC CONICAL TOP MANHOLE)

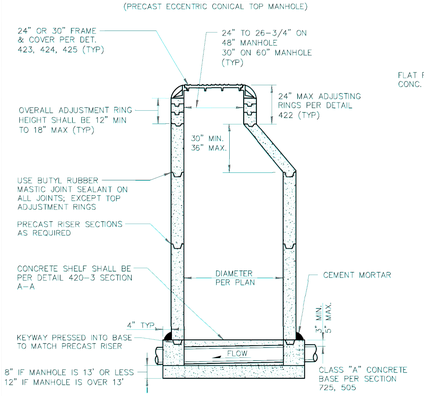

(PRECAST FLAT TOP M.H.)

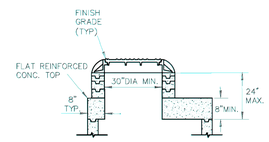

NOTES:

1. PRECAST STEEL REINFORCED MANHOLE SECTIONS SHALL BE MANUFACTURED IN ACCORDANCE WITH ASTM C 478 EXCEPT AS MODIFIED HEREIN.
2. CAST-IN-PLACE MANHOLE BASE TO BE CONSTRUCTED IN ONE PLACEMENT.
3. CAST-IN-PLACE MANHOLE BASE SHELF AND CHANNEL TO RECEIVE SMOOTH TROWEL FINISH.
4. MANHOLE COATINGS PER AGENCY.
5. SEE MAG DETAIL 422 FOR FINAL ADJUSTMENT TO GRADE.
6. ANY MANHOLE OVER 20' SHALL REQUIRE ENGINEER (STRUCTURAL) CALCS.
7. THE MANHOLE ACCESS POINT SHALL BE ORIENTED IN SUCH A WAY THAT THE OPENING IS DIRECTLY ABOVE THE LOWEST INVERT, OR AS OTHERWISE DIRECTED BY THE PLANS OR ENG.
8. FOR PRECAST BASE SEE DETAIL 420-2.
9. FLAT TOPS SHALL ONLY BE USED WITH APPROVAL FROM THE ENGINEER.

DETAIL NO.	MARICOPA ASSOCIATION of GOVERNMENTS	STANDARD DETAIL ENGLISH	CONCRETE SANITARY SEWER MANHOLE	REVISED	DETAIL NO.
420-1				01-01-2015	420-1

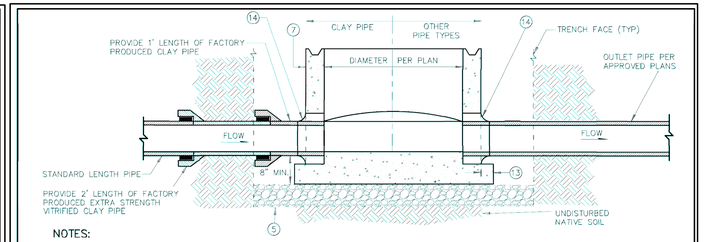

NOTES:

1. PRECAST, MANUFACTURER SHALL BE AN NATIONAL PRECAST CONCRETE ASSOCIATION (NPCA) CERTIFIED PLANT. ENTIRE PRECAST BASE SHALL BE MANUFACTURED AT THE PLANT PER ASTM C478.
2. MAG "AA" 4000 PSI CONCRETE SHALL BE USED FOR PRECAST MANHOLE BASES.
3. SPRING LINE OF CAST-IN-PLACE BELL SHALL STOP AT INSIDE FACE OF MANHOLE.
4. JOINTS FOR BARREL SECTION SHALL BE TONGUE AND GROOVE TYPE. ALL LIFTING HOLES SHALL BE SEALED WITH GROUT.
5. ALL PRECAST MANHOLE BASES SHALL BE PLACED ON 8" MINIMUM OF ABC PER SECTION 702 COMPACTED TO 100% MAXIMUM DENSITY.
6. ALL MODIFICATIONS SHALL BE APPROVED BY THE ENGINEER.
7. MINIMUM WALL THICKNESS SHALL BE PER ASTM C478 (MIN 5").
8. REINFORCEMENT SHALL BE DESIGNED BY AN ARIZONA REGISTERED PROFESSIONAL ENGINEER.
9. CHANNEL TRANSITION SHALL BE CONSTANT FROM INLET TO OUTLET OF MANHOLE TO FACILITATE SMOOTH TRANSITIONS AND ACCOMMODATE CORRESPONDING MANDREL.
10. THERE SHALL BE NO HARD CONNECTIONS (GROUTED) INTO THE MANHOLE BASE UNLESS APPROVED BY THE ENGINEER.
11. ALL SEWER SERVICE CONNECTIONS SHALL HAVE THE SAME CONNECTION TYPES IN THE PRECAST MANHOLE BASE.
12. ALL CORE HOLES INTO THIS STRUCTURAL PRECAST BASE SHALL BE COATED WITH AN APPROVED COATING MATERIAL.
13. THE MANHOLE BOTTOM SHALL EXTEND OUTSIDE THE MANHOLE WALL A MINIMUM 6" WIDE ON 48" BASES, 7" WIDE ON 60" BASES, AND 8" WIDE ON 72" BASES. EXTENDED BOTTOM SHALL BE A MINIMUM OF 5" THICK.
14. ALL PIPE CONNECTIONS SHALL BE IN COMPLIANCE WITH ASTM F477 OR ASTM C425. AN EXTRA STRENGTH VCP BELL WITH A POLYURETHANE JOINT THAT MEETS ASTM C425 MAY BE USED WITH VCP.

DETAIL NO.	MARICOPA ASSOCIATION of GOVERNMENTS	STANDARD DETAIL ENGLISH	PRECAST CONCRETE MANHOLE BASE	REVISED	DETAIL NO.
420-2				01-01-2015	420-2

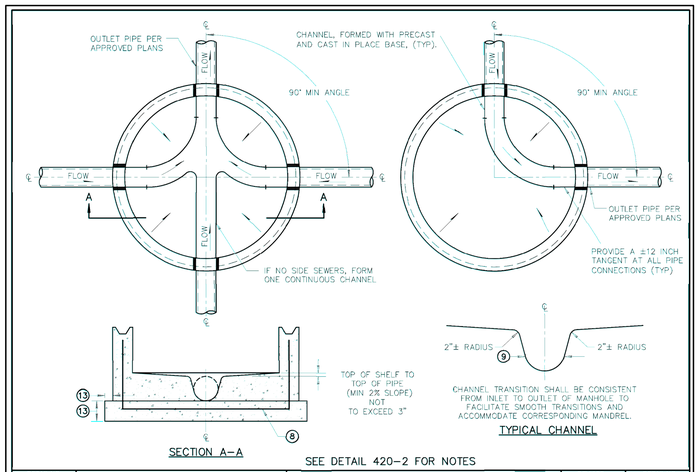

SEE DETAIL 420-2 FOR NOTES

DETAIL NO.	MARICOPA ASSOCIATION of GOVERNMENTS	STANDARD DETAIL ENGLISH	CONCRETE MANHOLE BASE	REVISED	DETAIL NO.
420-3				01-01-2015	420-3

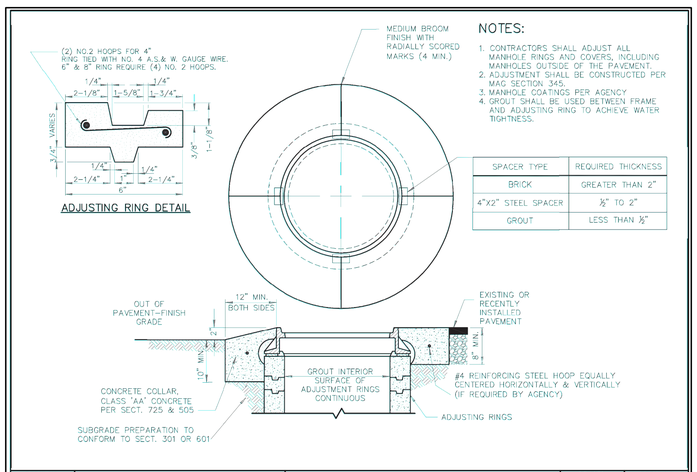

NOTES:

1. CONTRACTORS SHALL ADJUST ALL MANHOLE RINGS AND COVERS, INCLUDING MANHOLES OUTSIDE OF THE PAVEMENT.
2. ADJUSTMENT SHALL BE CONSTRUCTED PER MAG SECTION 345.
3. MANHOLE COATINGS PER AGENCY
4. GROUT SHALL BE USED BETWEEN FRAME AND ADJUSTING RING TO ACHIEVE WATER TIGHTNESS.

SPACER TYPE	REQUIRED THICKNESS
BRICK	GREATER THAN 2"
4"X2" STEEL SPACER	½" TO 2"
GROUT	LESS THAN ½"

DETAIL NO.	MARICOPA ASSOCIATION of GOVERNMENTS	STANDARD DETAIL ENGLISH	MANHOLE FRAME AND COVER ADJUSTMENT	REVISED	DETAIL NO.
422				01-01-2018	422

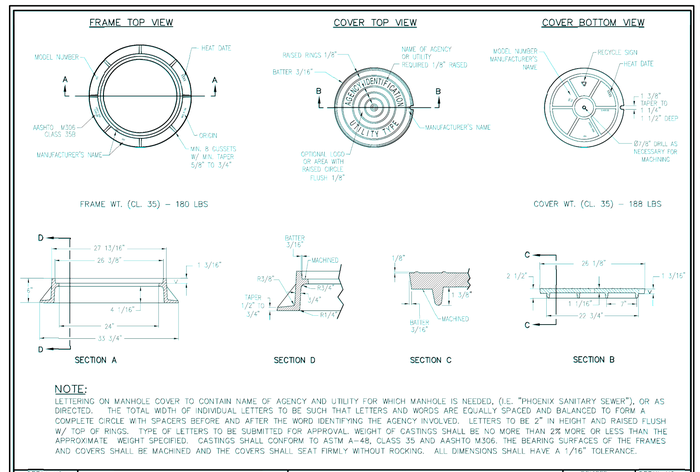

NOTE:

LETTERING ON MANHOLE COVER TO CONTAIN NAME OF AGENCY AND UTILITY FOR WHICH MANHOLE IS NEEDED, (I.E. "PHOENIX SANITARY SEWER"), OR AS DIRECTED. THE TOTAL WIDTH OF INDIVIDUAL LETTERS TO BE SUCH THAT LETTERS AND WORDS ARE EQUALLY SPACED AND BALANCED TO FORM A COMPLETE CIRCLE WITH SPACERS BEFORE AND AFTER THE WORD IDENTIFYING THE AGENCY INVOLVED. LETTERS TO BE 2" IN HEIGHT AND RAISED FLUSH W/ TOP OF RINGS. TYPE OF LETTERS TO BE SUBMITTED FOR APPROVAL. WEIGHT OF CASTINGS SHALL BE NO MORE THAN 2% MORE OR LESS THAN THE APPROXIMATE WEIGHT SPECIFIED. CASTINGS SHALL CONFORM TO ASTM A-48, CLASS 35 AND AASHTO M306. THE BEARING SURFACES OF THE FRAMES AND COVERS SHALL BE MACHINED AND THE COVERS SHALL SEAT FIRMLY WITHOUT ROCKING. ALL DIMENSIONS SHALL HAVE A 1/16" TOLERANCE.

DETAIL NO.	MARICOPA ASSOCIATION of GOVERNMENTS	STANDARD DETAIL ENGLISH	24" CAST IRON MANHOLE FRAME AND COVER	REVISED	DETAIL NO.
423-1				01-01-2020	423-1

FINAL CONSTRUCTION DOCUMENTS PACKAGE

JSRa
JOHNSON SMITTHIPONG & ROSAMOND ASSOCIATES, INC.
5210 E Williams Cir • Ste 600• Tucson, AZ 85711
(520) 547-7904 • www.jsrarchinc.com

Consultants:

DOWL
WWW.DOWL.COM
430 W. Warner Road, #B101
Tempe, Arizona 85284
480-753-0800

Registered Professional Engineer (Civil) CERTIFICATE NO. 54744 ERIN R. O'BRIEN Date Signed 11/3/22 ARIZONA, U.S.A. Expires 06/30/2025

WHITERIVER ADMINISTRATION OFFICE BUILDING

200 W HOSPITAL DR
WHITERIVER, AZ 85941

HHSI102201800007I

U. S. DEPARTMENT OF HEALTH AND HUMAN SERVICES
INDIAN HEALTH SERVICE
PHOENIX AREA OFFICE

No.	Date	Description

Issue Date:	11/03/22
Project No:	3122.41629.02
Scale:	AS SHOWN
Drawn By:	EO
Checked By:	RI

FINAL CD

Sheet Title:

MAG STANDARD DETAILS

Sheet Number:

C503

Autodesk Docs://2022 Whiteriver Modular/21-020 06 Arch WRMOB 2022.rvt
5/17/2021 2:51:02 PM

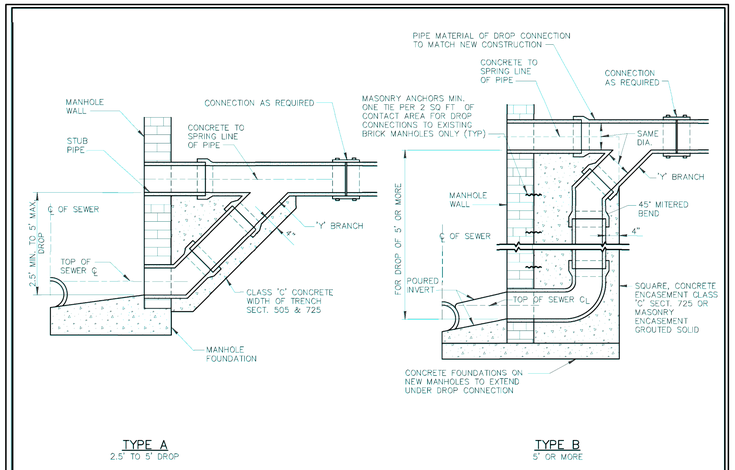

TYPE A
2.5' TO 5' DROP

TYPE B
5' OR MORE

DETAIL NO.			REVISED	DETAIL NO.
426	MARICOPA ASSOCIATION of GOVERNMENTS STANDARD DETAIL ENGLISH	DROP SEWER CONNECTIONS	01-01-2007	426

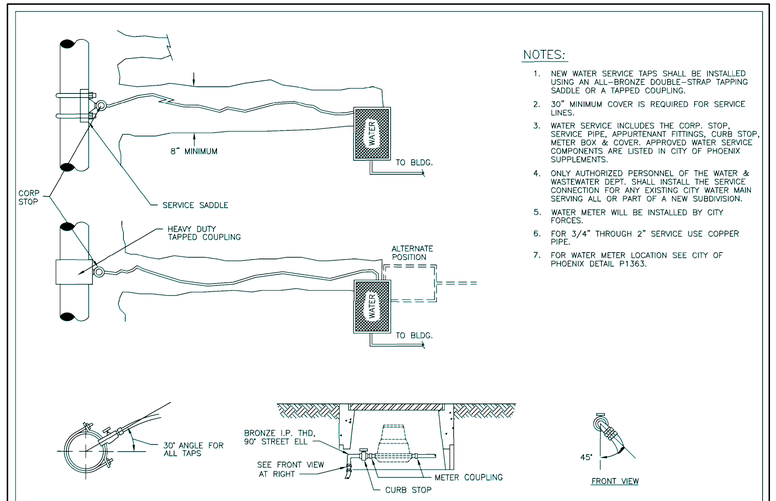

NOTES:

1. NEW WATER SERVICE TAPS SHALL BE INSTALLED USING AN ALL-BRONZE DOUBLE-STRAP TAPPING SADDLE OR A TAPPED COUPLING.
2. 30" MINIMUM COVER IS REQUIRED FOR SERVICE LINES.
3. WATER SERVICE INCLUDES THE CORP. STOP, SERVICE PIPE, APPURTENANT FITTINGS, CURB STOP, METER BOX & COVER. APPROVED WATER SERVICE COMPONENTS ARE LISTED IN CITY OF PHOENIX SUPPLEMENTS.
4. ONLY AUTHORIZED PERSONNEL OF THE WATER & WASTEWATER DEPT. SHALL INSTALL THE SERVICE CONNECTION FOR ANY EXISTING CITY WATER MAIN SERVING ALL OR PART OF A NEW SUBDIVISION.
5. WATER METER WILL BE INSTALLED BY CITY FORCES.
6. FOR 3/4" THROUGH 2" SERVICE USE COPPER PIPE.
7. FOR WATER METER LOCATION SEE CITY OF PHOENIX DETAIL P1363.

DETAIL NO.			APPROVED	DETAIL NO.
P1342	City of Phoenix STANDARD DETAIL	WATER SERVICE CONNECTIONS	ACTING CITY ENGINEER 7/31/08 DATE	P1342

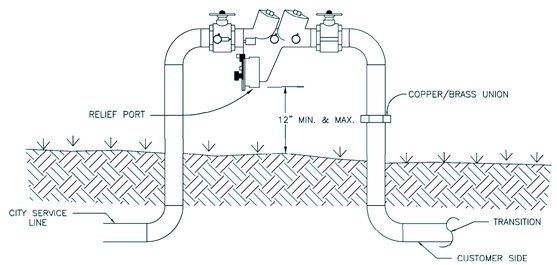

NOTES:

1. ALL PIPE/FITTINGS TO BE TYPE "K" COPPER.
2. ASSEMBLY SHALL BE APPROVED BY U.S.C. FOUNDATION FOR CROSS-CONNECTION CONTROL AND HYDRAULIC RESEARCH.
3. INSTALL BACKFLOW PREVENTION ASSEMBLY WITH RELIEF PORT FACING TOWARD THE GROUND.
4. BACKFLOW PREVENTION ASSEMBLY MUST BE LEVEL AND INSTALLED A MINIMUM AND A MAXIMUM OF 12 INCHES FROM RELIEF PORT TO FINAL GRADE.
5. PAVER CONCRETE BLOCK UNDER RELIEF PORT, SET AT FINAL GRADE.
6. TEST COCKS, (4) SHALL BE FITTED WITH BRASS PLUGS AND INSTALLED WITH TEFLON TAPE.
7. SHUTOFF VALVES TO BE RESILIENT BALL TYPE WITH REMOVABLE HANDLES.
8. COMPRESSION TYPE FITTINGS ARE NOT ALLOWED.
9. INSTALL THE BACKFLOW PREVENTION ASSEMBLY IMMEDIATELY DOWNSTREAM OF THE CITY WATER METER.
10. A COPPER/BRASS UNION MUST BE INSTALLED IN THE MIDDLE OF THE DOWNSTREAM RISER.
11. CONTACT CITY OF PHOENIX DEVELOPMENT SERVICES DEPARTMENT, CROSS-CONNECTION CONTROL FOR A LIST OF APPROVED BACKFLOW PREVENTION ASSEMBLIES.
12. COPPER FITTINGS SHALL BE CONNECTED WITH LEAD-FREE SOLDER JOINT.
13. TRANSITION FROM "K" COPPER TO OTHER APPROVED PIPING MATERIAL SHALL BE IN THE HORIZONTAL PIPING A MINIMUM OF 12" BELOW GRADE.

DETAIL NO.			APPROVED	DETAIL NO.
P1354	City of Phoenix STANDARD DETAIL	REDUCED PRESSURE PRINCIPLE BACKFLOW PREVENTION ASSEMBLY INSTALLATION – 2 1/2" AND UNDER	CITY ENGINEER 6/27/01 DATE	P1354

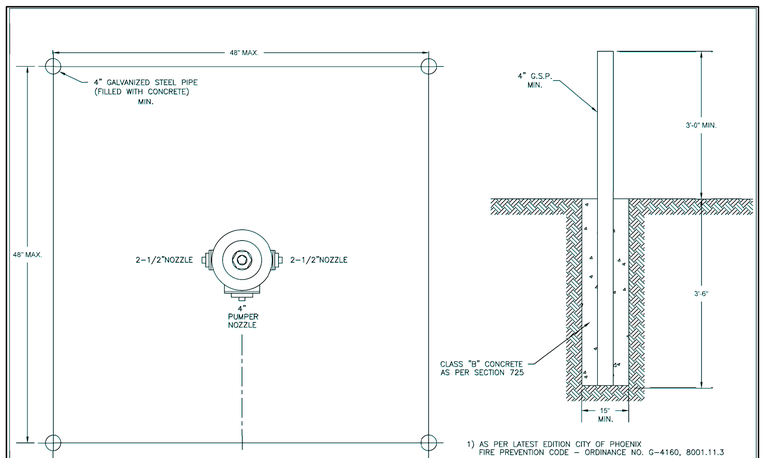

1) AS PER LATEST EDITION CITY OF PHOENIX FIRE PREVENTION CODE – ORDINANCE NO. G-4160, 8001.11.3

DETAIL NO.			APPROVED	DETAIL NO.
P1359	City of Phoenix STANDARD DETAIL	HYDRANT GUARDS	CITY ENGINEER 6/27/01 DATE	P1359

FINAL CONSTRUCTION DOCUMENTS PACKAGE

JOHNSON SMITTHIPONG & ROSAMOND ASSOCIATES, INC.
5210 E Williams Cir • Ste 600• Tucson, AZ 85711
(520) 547-7904 • www.jsrarchinc.com

Consultants:

DOWL
WWW.DOWL.COM
430 W. Warner Road, #B101
Tempe, Arizona 85284
480-753-0800

Registered Professional Engineer (Civil) CERTIFICATE NO. 54744 ERIN R. O'BRIEN Date Signed 11/3/22 ARIZONA, U.S.A.
Expires 06/30/2025

WHITERIVER ADMINISTRATION OFFICE BUILDING

200 W HOSPITAL DR
WHITERIVER, AZ 85941

HHSI1022018800007I

U. S. DEPARTMENT OF HEALTH AND HUMAN SERVICES
INDIAN HEALTH SERVICE
PHOENIX AREA OFFICE

No.	Date	Description

Issue Date:	11/03/22
Project No:	3122.41629.02
Scale:	AS SHOWN
Drawn By:	EO
Checked By:	RI

FINAL CD

Sheet Title:

MAG AND CITY OF PHOENIX DETAILS

Sheet Number:

C504

Autodesk Docs://2022 Whiteriver Modular/21-020 06 Arch WRMOB 2022.rvt
5/17/2021 2:51:02 PM

STORM WATER MANAGEMENT PLAN

PROJECT / SITE INFORMATION FOR COMPLETION OF NOI

PROJECT NAME: WHITERIVER OFFICE BUILDING

PROJECT DESCRIPTION: CONSTRUCTION OF A NEW OFFICE BUILDING AND NEW SITE DEVELOPMENT, INCLUDING GRADING AND DRAINAGE, PAVEMENT, SEWER AND WATER LINES, AND OTHER IMPROVEMENTS.

PROJECT ADDRESS/LOCATION: 200 W HOSPITAL DR, WHITERIVER, AZ 85941

LATITUDE: N 33°52'20.55" LONGITUDE: W 109°57'41.04"

ESTIMATE OF AREA TO BE DISTURBED: 1.0± ACRES

DESCRIPTION OF CONSTRUCTION ACTIVITY: CONSTRUCTION OF A NEW OFFICE BUILDING TO REPLACE EXISTING OFFICE TRAILERS, AS WELL AS CONSTRUCTION OF NEW SITE DEVELOPMENT, INCLUDING GRADING AND DRAINAGE, PAVEMENT, AND SEWER AND WATER LINES.

A) RUNOFF COEFFICIENT: EXISTING: 0.73 PROPOSED: 0.75
B) PEAK PROJECT SITE DISCHARGE 100-YR EVENT: EXISTING: 7.2 CFS PROPOSED: 7.4 CFS
C) IMPERVIOUS AREA: EXISTING: 59%; DEVELOPED: 63%

SITE EARTHWORK DATA:
A) SITE AREA TOTAL = 2± ACRES
B) SITE AREA GRADED/DISTURBED = 1.0± ACRES
C) ESTIMATED TOTAL CUT = 53 CY (UNFACTORED)
D) ESTIMATED TOTAL FILL = 2,012 CY (UNFACTORED)

SOIL DATA*:
100% SOIL TYPE C, TOURS SILT LOAM 0 TO 8 PERCENT SLOPES.
*ACCORDING TO ONLINE USDA SOIL SURVEY DATA

QUALITY OF DISCHARGE: DISCHARGE WILL BE DIRECTED TO SOUTH TO NATURAL DRAINAGE PATH TOWARDS THE NORTH FORK WHITE RIVER.

MATERIALS INVENTORY

THE MATERIALS OR SUBSTANCES LISTED BELOW ARE EXPECTED TO BE ON-SITE DURING CONSTRUCTION:

CONCRETE	PAINTS
HERBICIDES	TERMITE TREATMENT
FUEL & PETROLEUM BASED PRODUCTS	DETERGENTS
CLEANING SOLVENTS	FERTILIZERS
ASPHALT	TAR
METAL STUDS	WOOD
MASONRY BLOCK	ROOFING MATERIAL
_____	_____
_____	_____

CONTRACTOR TO STRIKEOUT AND ADD ITEMS AS NECESSARY. EMERGENCY HAZARDOUS SPILL CONTAINMENT NUMBERS: PYRAMID LAKE FIRE RESCUE/EMS, 775-574-8999. IF A HAZARDOUS MATERIAL SPILL COULD REACH SURFACE WATER, THE CONTRACTOR MUST ALSO CONTACT (24 HR.) THE "NATIONAL RESPONSE CENTER" AT 1-800-424-8802

POLLUTION PREVENTION COMMITTEE MEMBERS

THE CONTRACTOR SHALL DESIGNATE THE FOLLOWING INDIVIDUALS AS TRAINED PERSONNEL TO IMPLEMENT THE SWPPP.

NAME: _____ NAME: _____
TITLE: _____ TITLE: _____
PH: _____ PH: _____
24HR PH: _____ 24HR PH: _____

NAME: _____ NAME: _____
TITLE: _____ TITLE: _____
PH: _____ PH: _____
24HR PH: _____ 24HR PH: _____

MAINTENANCE & INSPECTION

1. ALL EROSION AND SEDIMENT CONTROL MEASURES SHALL BE INSPECTED AT LEAST ONCE EVERY 14 CALENDAR DAYS AND WITHIN 24 HOURS OF ANY STORM EVENT OF 0.25 INCHES OR GREATER. RAINFALL GAUGE TO BE KEPT ON-SITE TO DETERMINE DEPTH OF RAINFALL.
2. ALL CONTROL MEASURES SHALL BE MAINTAINED IN GOOD WORKING ORDER. IF A REPAIR IS NECESSARY, IT SHALL BE INITIATED WITHIN 24 HOURS OF THE INSPECTION REPORT.
3. BUILT UP SEDIMENT SHALL BE REMOVED FROM SILTATION FENCE AND STRAW BALES WHEN IT HAS REACHED ONE-THIRD THE HEIGHT OF THE FENCE OR THE BALES.
4. SILTATION FENCE SHALL BE INSPECTED FOR DEPTH OF SEDIMENTS AND TEARS TO SEE IF THE FABRIC IS SECURELY ATTACHED TO THE FENCE POSTS, AND TO SEE THAT THE FENCE POSTS ARE FIRMLY IN THE GROUND.
5. THE DETENTION BASINS AND OUTLET STRUCTURES & PIPES SHALL BE INSPECTED FOR DEPTH OR SEDIMENT. BUILT UP SEDIMENT SHALL BE REMOVED WHEN IT REACHES 10 PERCENT OF THE DESIGN CAPACITY, OR AT THE END OF THE JOB.
6. LANDSCAPING, PLANTING, AND SEEDING SHALL BE INSPECTED FOR BARE SPOTS, WASHOUT, ADEQUACY OF IRRIGATION, AND HEALTHY GROWTH.
7. A MAINTENANCE INSPECTION REPORT SHALL BE MADE AFTER EACH INSPECTION. A COPY OF THE REPORT SHALL BE KEPT ON FILE WITH THE SITE SUPERINTENDENT, AND WILL BE MADE AVAILABLE TO THE OWNER, COUNTY OFFICIALS, AND THE ARCHITECT & PROJECT ENGINEER.
8. THE SITE SUPERINTENDENT SHALL SELECT TWO INDIVIDUALS WHO WILL BE RESPONSIBLE FOR INSPECTIONS, MAINTENANCE AND REPAIR ACTIVITIES, AND FILLING OUT THE INSPECTION & MAINTENANCE REPORT.
9. THE CONTRACTOR SHALL RESTORE ALL DRAINAGE SWALES TO ELEVATIONS SHOWN ON IMPROVEMENT PLANS, PRIOR TO REMOVAL OF TEMPORARY EROSION CONTROLS.

GENERAL NOTES

1. THE OPERATOR SHALL REPORT TO EPA ANY NON-COMPLIANCE (INCLUDING SPILLS) WHICH MAY ENDANGER HUMAN HEALTH OR THE ENVIRONMENT. THE OPERATOR SHALL ORALLY NOTIFY THE OFFICE LISTED BELOW WITHIN 24 HOURS;
   EPA-REGION 9
   PHONE: 1-800-300-2193
2. THE OPERATOR SHALL POST A SIGN OR OTHER NOTICE NEAR THE MAIN ENTRANCE OF THE CONSTRUCTION SITE ACCORDING TO THE EPA - POSTING REQUIREMENTS (SECTION 1.5 IN CGP). THE APPROVED SWPPP WILL BE LOCATED IN THE SITE CONSTRUCTION OFFICE.

NOTICE OF TERMINATION (NOT)

1. WITHIN NO LESS THAN 30 CALENDAR DAYS AFTER COMPLETING HIS PORTION OF THE EARTHWORK DEPICTED ON THE PROJECT PLANS, AND THE FINAL STABILIZATION OF THE PERMITTEES PORTION OF THE SITE, CONTRACTOR(S) SHALL FILE A "NOTICE OF TERMINATION" WITH THE EPA USING THE NPDES eREPORTING TOOL (NeT):

   TO ACCESS NeT, GO TO:
   https://www.epa.gov/npdes/stormwater-dischargesconstruction-activities#ereporting

   IF THE EPA REGIONAL OFFICE GRANTS APPROVAL TO USE A PAPER NOT, THE FORM IS LOCATED ONLINE:
   https://www.https://www.epa.gov/sites/production/files/2017-02/documents/2017_cgp_final_appendix_k_-_not_fillable_508.pdf
2. EACH OPERATOR (AS DEFINED BY EPA) SHALL FILE A SEPARATE "NOTICE OF TERMINATION." NOTICES ARE NOT TRANSFERABLE TO ANY OTHER OPERATOR.

NOTICE OF INTENT (NOI)

1. WITHIN NO LESS THAN 14 CALENDAR DAYS PRIOR TO UNDERTAKING ANY PORTION OF THE EARTHWORK DEPICTED ON THE PROJECT PLANS, CONTRACTOR(S) SHALL FILE A "NOTICE OF INTENT FOR STORM WATER DISCHARGES ASSOCIATED WITH CONSTRUCTION ACTIVITY UNDER A NPDES GENERAL PERMIT" WITH THE EPA USING THE NPDES eREPORTING TOOL (NeT).

   TO ACCESS NeT, GO TO:
   https://www.epa.gov/npdes/stormwater-dischargesconstruction-activities#ereporting

   IF THE EPA REGIONAL OFFICE GRANTS APPROVAL TO USE A PAPER NOI, THE FORM IS LOCATED ONLINE:
   https://www.https://www.epa.gov/sites/production/files/2017-02/documents/2017_cgp_final_appendix_j_-_noi_fillable_508.pdf
2. EACH OPERATOR (AS DEFINED BY EPA) SHALL FILE A SEPARATE "NOTICE OF INTENT". NOTICES ARE NOT TRANSFERABLE TO ANY OTHER OPERATOR.

RETENTION OF RECORDS

1. A COPY OF THE STORM WATER POLLUTION PREVENTION PLAN (INCLUDING THE ASSOCIATED BOUND NARRATIVE) SHALL BE KEPT AT A CENTRAL LOCATION ON THE CONSTRUCTION SITE FROM THE DATE OF PROJECT INITIATION TO THE DATE OF FINAL STABILIZATION.
2. PERMITTEES SHALL RETAIN COPIES OF THE STORM WATER POLLUTION PREVENTION PLAN AND ANY REVISIONS TO THE PLAN, AND ALL REPORTS REQUIRED BY THE PERMIT, AND RECORDS OF ALL DATA USED TO COMPLETE THE NOTICE OF INTENT FOR A PERIOD OF A LEAST THREE YEARS FROM THE DATE THE SITE IS FINALLY STABILIZED. THIS PERIOD MAY BE EXTENDED BY THE DIRECTOR OF THE EPA AT ANY TIME.

RELEASE OF HAZARDOUS SUBSTANCES OR OIL

1. THE PERMITTEE SHALL PREVENT OR MINIMIZE THE DISCHARGE OF HAZARDOUS SUBSTANCES OR OIL FROM THE SITE. IF A PERMITTEE ALLOWS DISCHARGES CONTAINING AN AMOUNT EQUAL TO OR IN EXCESS OF A REPORTABLE QUANTITY ESTABLISHED UNDER 40 CFR 110, 40 CFR 117, OR 40 CFR 302, DURING A 24 HOUR PERIOD, THE NATIONAL RESPONSE CENTER (NRC) MUST BE NOTIFIED (PHONE NO. 800-424-8802).
2. WITHIN 72 HOURS OR KNOWLEDGE OF THE RELEASE, THE PERMITTEE SHALL PREPARE AND SUBMIT A SATISFACTORY WRITTEN PROPOSAL OF REVISIONS TO BE INCORPORATED INTO THE SWPPP TO PREVENT REOCCURRENCES OF SUCH RELEASES. THE CIRCUMSTANCES LEADING TO THE RELEASE, RESPONSES TO BE EMPLOYED FOR SUCH RELEASES, AND MEASURES TO PREVENT THE REOCCURRENCE OF SUCH RELEASES SHALL BE DOCUMENTED. AFTER A SUITABLE PROPOSAL IS ACCEPTED BY THE OWNER AND ENGINEER, (AND WITHIN 14 CALENDAR DAYS OF THE RELEASE) IT SHALL BECOME AN OFFICIAL REVISION TO THE SWPPP AND CONFORMANCE TO ITS PROVISIONS SHALL BE REQUIRED.

SPILL CONTAINMENT PLAN

1. THE CONSTRUCTION SITE MANAGEMENT TEAM SHALL DEVELOP A SPILL PREVENTION PLAN AND ENSURE THAT THE PLAN IS COMMUNICATED TO ALL FIELD PERSONNEL.
2. THE PLAN SHALL IDENTIFY THE TYPES OF HAZARDOUS MATERIALS, WHICH MAY BE USED ON THE PROJECT.
3. DEVELOP A STRATEGY TO STOP LEAKS AT THE SOURCE OF THE SPILL.
4. DEVELOP A STRATEGY TO CONTAIN THE MATERIALS ALREADY SPILLED USING AVAILABLE MATERIALS AND EQUIPMENT.
5. CONTACT THE LOCAL FIRE MARSHALL TO REVIEW ON-SITE STORAGE AREAS TO DETERMINE SPECIFIC REQUIREMENTS AND APPROPRIATE CONTAINMENT TECHNIQUES.
6. COMPLY WITH SUGGESTIONS AND REQUIREMENTS SET BY LOCAL FIRE DEPARTMENT.
7. UPDATE SPILL CONTAINMENT DURING THE COURSE OF CONSTRUCTION AS CHANGES OCCUR IN THE TYPES OF CHEMICALS BEING STORED.
8. IF A SPILL OCCURS FOLLOW PROPER PROCEDURE AS REQUIRED IN THE SPILL CONTAINMENT PLAN.
9. DISPOSE OF MATERIALS PER AGENCY OR MANUFACTURER'S INSTRUCTION.
10. ALL SPILLS REGARDLESS OF SIZE SHOULD BE REPORTED TO THE PROPER AGENCIES.

SCHEDULE OF MAJOR CONSTRUCTION ACTIVITIES

MAJOR ACTIVITY	SCHL'D COMPLETOPM DATE	REMARKS

THE SCHEDULE OF MAJOR CONSTRUCTION ACTIVITIES SHALL BE COMPLETED BY THE PROJECT SUPERINTENDENT PRIOR TO FILING HIS NOTICE OF INTENT. HE SHALL UPDATE THE SCHEDULE AS NEEDED.

SHEET INDEX

DESCRIPTION	SHEET NO.
COVER SHEET	C600
DETAILS	C601
SWMP	C602

CONTRACTOR

TO BE DETERMINED

EQUIPMENT MAINTENANCE PROCEDURES

1. PROPERLY DISPOSE OF OR RECYCLE USED OILS, HYDRAULIC FLUIDS, AND GEAR LUBRICANTS. DO NOT DUMP FUELS AND LUBRICANTS INTO PITS OR ON THE GROUND. NEVER PLACE USED OIL IN A DUMPSTER OR POUR DOWN A STORM DRAIN.
2. PROPERLY DISPOSE OF OR RECYCLE USED BATTERIES.
3. DO NOT BURY USED TIRES.
4. DO NOT DISPOSE OF EXTRA PAINTS AND COATINGS BY DUMPING LIQUID ONTO THE GROUND OR THROWING IN DUMPSTERS. ALLOW COATINGS TO DRY OR HARDEN BEFORE DISPOSAL INTO COVERED DUMPSTERS.
5. REPAIR LEAKS OF HYDRAULIC FLUIDS, OILS, AND OTHER FLUIDS AS SOON AS POSSIBLE.
6. USE STEAM OR HIGH PRESSURE WATER INSTEAD OF THINNERS AND SOLVENTS TO WASH DOWN HEAVY EQUIPMENT. LOCATE THE WASH DOWN AREA IN A CONTAINED AREA, AND DISPOSE OF WASH WATER AND DETERGENTS TO THE SANITARY SEWER SYSTEM ONLY AFTER GRIT IS REMOVED.
7. PROVIDE SPILL CONTAINMENT DIKES AROUND STORED OIL AND CHEMICAL DRUMS.
8. MAINTAIN WASTE OIL CONTAINERS IN LEAK PROOF CONDITION.
9. CLEAN EQUIPMENT RADIATORS TO MAXIMIZE COOLING EFFICIENCY AND PREVENT BOIL OVER.
10. INSPECT EQUIPMENT FOR DAMAGED HOSES AND LEAKY GASKETS DAILY. REPAIR OR REPLACE AS NEEDED.

ALLOWABLE NON-STORM WATER DISCHARGES

1. THE ONLY DISCHARGES ALLOWED UNDER THE GENERAL PERMIT, OTHER THAN STORM WATER DISCHARGES ARE AS FOLLOWS:

A) FIRE FIGHTING ACTIVITY RUNOFF
B) FIRE HYDRANT FLUSHING
C) LANDSCAPE IRRIGATION
D) VEHICLE WASH WATER IF DETERGENTS ARE NOT USED
E) DUST CONTROL RUNOFF IN ACCORDANCE WITH PERMIT CONDITIONS
F) POTABLE WATER SOURCES INCLUDING UNCONTAMINATED WATERLINE FLUSHING
G) ROUTINE EXTERNAL BUILDING WASH DOWN THAT DO NOT INVOLVE DETERGENTS AND SURFACED DO NOT CONTAIN HAZARDOUS SUBSTANCES
H) NON-DETERGENT PAVEMENT WASH WATER (WHERE SPILLS/LEAKS OF TOXIC OR HAZARDOUS MATERIALS HAVE NOT OCCURRED, UNLESS ALL SPILLED MATERIAL HAD BEEN REMOVED
I) UNCONTAMINATED AIR CONDITIONING OR COMPRESSOR CONDENSATE
J) UNCONTAMINATED, NON-TURBID GROUND WATER OR SPRING WATER
K) FOUNDATION OR FOOTER DRAIN WATER (PROVIDED THERE WAS NO CONTAMINATION WITH PROCESS MATERIALS SUCH AS SOLVENTS)
L) CONSTRUCTION DE-WATERING DISCHARGES

2. ALLOWABLE NON-STORM WATER DISCHARGES MUST BE DIRECTLY RELATED TO AND ORIGINATE FROM THE CONSTRUCTION OF THE SITE AS DEPICTED IN THESE PLANS, OR BE A DEDICATED SUPPORT ACTIVITY TO THE CONSTRUCTION OF THE SITE.

TRAINING

EMPLOYEES AND CONTRACTOR PERSONNEL SHALL BE TRAINED IN THE FOLLOWING AREAS, AT LEAST ONCE PER YEAR:

A) PREVENTIVE MEASURES, INCLUDING SPILL PREVENTION AND RESPONSE, CONSTRUCTION ACTIVITY INSPECTIONS, AND PREVENTIVE MAINTENANCE.
B) POLLUTION CONTROL LAWS AND REGULATIONS.
C) THE CONSTRUCTION ACTIVITY'S SWPPP.
D) FEATURES AND OPERATIONS OF THE CONSTRUCTION ACTIVITY THAT ARE DESIGNED TO MINIMIZE DISCHARGES OF SECTION 313 WATER PRIORITY CHEMICALS, PARTICULARLY SPILL PREVENTION PROCEDURES.

MAINTENANCE & INSPECTION REPORTS

ONCE AN INSPECTION HAS BEEN PERFORMED, A REPORT CONTAINING THE FOLLOWING MUST BE RETAINED WITH THE SWPPP FOR UP TO 3 YEARS AFTER THE SITE HAS BEEN FINALLY STABILIZED.

A) NAMES AND QUALIFICATIONS OF PERSONNEL CONDUCTING THE INSPECTION.
B) DATES OF INSPECTION.
C) OBSERVATIONS RELATING TO IMPLEMENTATION OF THE SWPPP.
D) ACTIONS TAKEN
E) INCIDENTS OF NON-COMPLIANCE.

IF NO INCIDENTS OF NON-COMPLIANCE WERE FOUND, THE REPORT SHALL CONTAIN A CERTIFICATION THAT THE SITE IS IN COMPLIANCE WITH THE SWPPP AND THE PERMIT. THE REPORT MUST BE SIGNED IN ACCORDANCE WITH REGULATORY REQUIREMENTS.

OPERATORS FOR PROJECT SITE

1. CONTRACTOR

   NAME: _____
   TITLE: _____
   PH: _____
   OPERATOR HAS CONTROL OF: _____

2. SUBCONTRACTOR(S)

A) NAME: _____
   TITLE: _____
   PH: _____
   OPERATOR HAS CONTROL OF: _____

B) NAME: _____
   TITLE: _____
   PH: _____
   OPERATOR HAS CONTROL OF: _____

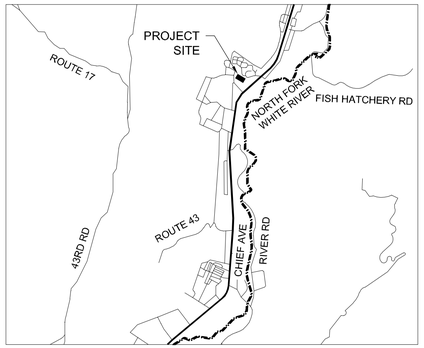

VICINITY MAP

NOT TO SCALE

EROSION CONTROLS

TEMPORARY STABILIZATION PRACTICES

1. DUST CONTROL
A) PROVIDE COVERS FOR TRUCKS TRANSPORTING ANY MATERIALS THAT CONTRIBUTE DUST.
B) PROVIDE WET SUPPRESSION OR CHEMICAL STABILIZATION DURING THE GRADING PROCESS.
C) SWEEP PAVED ROADWAYS OF MUD AND DUST AS NECESSARY TO PREVENT MIGRATION OF MATERIALS TO RECEIVING WATERS.

2. CONSTRUCTION ROAD STABILIZATION:
A) IMMEDIATELY AFTER GRADING OR THE COMPLETION OF UTILITY INSTALLATION, APPLY A 6-INCH COURSE OF 2- TO 4-INCH CRUSHED ROCK, GRAVEL BASE, OR CRUSHED SURFACING BASE.
B) PROVIDE DRAINAGE SWALES ON EACH SIDE OF THE ROADWAY FOR A NORMAL CROWN SECTION, OR THE DOWNSTREAM SIDE FOR A SUPER-ELEVATED SECTION.
C) INSTALLED DRAINAGE INLETS SHALL BE PROTECTED TO PREVENT SEDIMENT-LADEN WATER ENTERING THE DRAIN SEWER SYSTEM. MAINTENANCE:

3. INSPECT STABILIZED AREAS BI-WEEKLY, AND AFTER ANY STORM EVENT.

4. ADD ROCK OR GRAVEL, IF NECESSARY, TO STABILIZE ANY EROSION. PERMANENT SOIL STABILIZATION MEASURES: ALL DISTURBED SOIL, WHICH WILL NOT BE PAVED, RIP RAPPED, OR OTHERWISE COVERED TO PREVENT EROSION, SHALL BE VEGETATED AND/OR LANDSCAPED IN ACCORDANCE WITH THE PROJECT PLANS AND SPECIFICATIONS WITHIN 14 DAYS OF THE TEMPORARY OR PERMANENT CEASE OF CONSTRUCTION. RETENTION BASINS SERVE AS PERMANENT SEDIMENT CONTROLS.

   TEMPORARY STRUCTURAL EROSION & SEDIMENT CONTROLS:
   SILT FENCE
   PIPE SLOPE DRAIN
   STABILIZED CONSTRUCTION ENTRANCE
   CONCRETE TRUCK CLEANING AREA
   STRAW BALE BARRIER
   EQUIPMENT MAINTENANCE
   CONSTRUCTION STABILIZATION ROAD
   SPILL CONTAINMENT PLAN
   FILTER FABRIC

   PERMANENT STRUCTURAL EROSION & SEDIMENT CONTROLS:
   SIDEWALKS AND PAVEMENTS
   GRASS COVER OR DG AT LANDSCAPE AREAS
   RIPRAP AT DRAINAGE SLOPES
   CONTINUOUS MAINTENANCE OF BASINS AND DITCHES TO REMOVE EXCESS SEDIMENT AND DEBRIS

COMPLETION OF BLANK ITEMS AND UPDATING OF INFORMATION

THE PROJECT SUPERINTENDENT SHALL COMPLETE THE BLANK SPACES ON THE SWPPP PRIOR TO SUBMITTING HIS NOTICE OF INTENT. HE SHALL UPDATE THE SWPPP AS NEEDED TO ENSURE COMPLIANCE WITH ALL REGULATIONS GOVERNING CONSTRUCTION ACTIVITIES.

POLLUTION PREVENTION PLAN CERTIFICATION

OWNER'S CERTIFICATION

I CERTIFY UNDER PENALTY OF LAW THAT THIS DOCUMENT AND ALL ATTACHMENTS WERE PREPARED UNDER MY DIRECT SUPERVISION IN ACCORDANCE WITH A SYSTEM DESIGNED TO ASSURE THAT QUALIFIED PERSONNEL PROPERLY GATHERED AND EVALUATED THE INFORMATION SUBMITTED. BASED ON MY INQUIRY OF THE PERSON OR PERSONS WHO MANAGE THE SYSTEM, OR THOSE PERSONS DIRECTLY RESPONSIBLE FOR GATHERING THE INFORMATION, THE INFORMATION SUBMITTED IS, TO THE BEST OF KNOWLEDGE AND BELIEF, TRUE, ACCURATE, AND COMPLETE. I AM AWARE THAT THERE ARE SIGNIFICANT PENALTIES FOR SUBMITTING FALSE INFORMATION, INCLUDING THE POSSIBILITY OF FINE AND IMPRISONMENT FOR KNOWING VIOLATIONS.

_____(SIGNED)

DATE _____

PROJECT MANAGER

CONTRACTOR'S CERTIFICATION

I CERTIFY UNDER PENALTY OF LAW THAT THIS DOCUMENT AND ALL ATTACHMENTS WERE PREPARED UNDER MY DIRECT SUPERVISION IN ACCORDANCE WITH A SYSTEM DESIGNED TO ASSURE THAT QUALIFIED PERSONNEL PROPERLY GATHERED AND EVALUATED THE INFORMATION SUBMITTED. BASED ON MY INQUIRY OF THE PERSON OR PERSONS WHO MANAGE THE SYSTEM, OR THOSE PERSONS DIRECTLY RESPONSIBLE FOR GATHERING THE INFORMATION, THE INFORMATION SUBMITTED IS, TO THE BEST OF KNOWLEDGE AND BELIEF, TRUE, ACCURATE, AND COMPLETE. I AM AWARE THAT THERE ARE SIGNIFICANT PENALTIES FOR SUBMITTING FALSE INFORMATION, INCLUDING THE POSSIBILITY OF FINE AND IMPRISONMENT FOR KNOWING VIOLATIONS.

_____(SIGNED)

DATE _____

CONSTRUCTION MANAGER

Contact Arizona 811 at least two full working days before you begin excavation
ARIZONA811 BLUE STAKE, INC.
Call 811 or click Arizona811.com

FINAL CONSTRUCTION DOCUMENTS PACKAGE

JSRa
JOHNSON SMITTHIPONG & ROSAMOND ASSOCIATES, INC.
5210 E Williams Cir • Ste 600• Tucson, AZ 85711
(520) 547-7904 • www.jsrarchinc.com

Consultants:

DOWL
WWW.DOWL.COM
430 W. Warner Road, #B101
Tempe, Arizona 85284
480-753-0800

Registered Professional Engineer (Civil) CERTIFICATE NO. 54744 ERIN R. O'BRIEN Date Signed 11/03/22 ARIZONA, U.S.A. Expires 06 / 30 / 2025

WHITERIVER ADMINISTRATION OFFICE BUILDING

200 W HOSPITAL DR
WHITERIVER, AZ 85941

HHSI102201800007I

U. S. DEPARTMENT OF HEALTH AND HUMAN SERVICES
INDIAN HEALTH SERVICE
PHOENIX AREA OFFICE

No.	Date	Description

Issue Date:	11/03/22
Project No:	3122.41629.02
Scale:	AS SHOWN
Drawn By:	EO
Checked By:	RI

FINAL CD

Sheet Title:

STORMWATER MANAGEMENT PLAN COVER

Sheet Number:

C600

Autodesk Docs://2022 Whiteriver Modular/21-020 06 Arch WRMOB 2022.rvt
5/17/2021 2:51:02 PM

MAINTENANCE & INSPECTION REPORTS

ONCE AN INSPECTION HAS BEEN PERFORMED, A REPORT CONTAINING THE FOLLOWING MUST BE RETAINED WITH THE SWPPP FOR UP TO 3 YEARS AFTER THE SITE HAS BEEN FINALLY STABILIZED.

A) NAMES AND QUALIFICATIONS OF PERSONNEL CONDUCTING THE INSPECTION.
B) DATES OF INSPECTION.
C) OBSERVATIONS RELATING TO IMPLEMENTATION OF THE SWPPP.
D) ACTIONS TAKEN
E) INCIDENTS OF NON-COMPLIANCE.

IF NO INCIDENTS OF NON-COMPLIANCE WERE FOUND, THE REPORT SHALL CONTAIN A CERTIFICATION THAT THE SITE IS IN COMPLIANCE WITH THE SWPPP AND THE PERMIT. THE REPORT MUST BE SIGNED IN ACCORDANCE WITH REGULATORY REQUIREMENTS.

SPILL PREVENTION

THE FOLLOWING MATERIAL MANAGEMENT PRACTICES SHALL BE USED TO REDUCE THE RISK OF SPILLS OR OTHER ACCIDENTAL EXPOSURE OF MATERIALS AND SUBSTANCES TO STORMWATER RUNOFF.

1. GOOD HOUSEKEEPING: THE FOLLOWING HOUSEKEEPING PRACTICES SHALL BE FOLLOWED ON-SITE DURING THE CONSTRUCTION OF THE PROJECT:

A) AN EFFORT SHALL BE MADE TO STORE ONLY ENOUGH PRODUCT REQUIRED TO DO THE JOB.
B) ALL MATERIAL STORED ON-SITE SHALL BE STORED IN A NEAT, ORDERLY MANNER IN THEIR APPROPRIATE CONTAINERS AND, IF POSSIBLE, UNDER ROOF OR OTHER ENCLOSURE.
C) PRODUCTS SHALL BE KEPT IN THEIR ORIGINAL CONTAINERS WITH THE ORIGINAL MANUFACTURER'S LABEL.
D) SUBSTANCES SHALL NOT BE MIXED WITH ONE ANOTHER UNLESS RECOMMENDED BY THE MANUFACTURER.
E) WHENEVER POSSIBLE, ALL OF A PRODUCT SHALL BE USED UP BEFORE DISPOSING OF THE CONTAINER.
F) MANUFACTURER'S RECOMMENDATIONS FOR PROPER USE AND DISPOSAL SHALL BE FOLLOWED.
G) THE SITE SUPERINTENDENT SHALL DAILY INSPECT ON-SITE MATERIAL TO ENSURE PROPER USE, STORAGE, AND DISPOSAL.

2. HAZARDOUS PRODUCTS: THESE PRACTICES SHALL BE FOLLOWED TO REDUCE THE RISKS ASSOCIATED WITH HAZARDOUS MATERIALS:

A) PRODUCTS SHALL BE KEPT IN ORIGINAL CONTAINERS UNLESS THEY ARE NOT RE-SEALABLE.
B) ORIGINAL LABELS AND MATERIAL SAFETY DATA SHALL BE RETAINED. THEY CONTAIN IMPORTANT PRODUCT INFORMATION.
C) IF SURPLUS PRODUCT MUST BE DISPOSED OF, MANUFACTURER'S LOCAL, STATE, AND FEDERAL RECOMMENDED METHODS FOR PROPER DISPOSAL WILL BE FOLLOWED.

SPILL CLEANUP

IN ADDITION TO THE GOOD HOUSEKEEPING AND MATERIAL MANAGEMENT PRACTICES DISCUSSED ELSEWHERE IN THE SWMP PLAN, THE FOLLOWING PRACTICES SHALL BE FOLLOWED FOR SPILL PREVENTION AND CLEANUP.

1. MANUFACTURER'S RECOMMENDED METHODS FOR SPILL CLEANUP SHALL BE CLEARLY POSTED, AND SITE PERSONNEL SHALL BE MADE AWARE OF THE PROCEDURES AND THE LOCATION OF THE INFORMATION AND CLEANUP SUPPLIES.
2. MATERIALS AND EQUIPMENT NECESSARY FOR SPILL CLEANUP SHALL BE KEPT IN THE MATERIAL STORAGE AREA ON-SITE. EQUIPMENT AND MATERIALS SHALL INCLUDE, BUT NOT BE LIMITED TO BROOMS, DUST PANS, MOPS, RAKES, GLOVES, GOGGLES, KITTY LITTER, SAND, SAW DUST, AND PLASTIC AND METAL TRASH CONTAINERS SPECIFICALLY FOR THIS PURPOSE.
3. ALL SPILLS SHALL BE CLEANED UP IMMEDIATELY AFTER DISCOVERY.
4. THE SPILL AREA SHALL BE KEPT WELL VENTILATED, AND PERSONNEL WILL WEAR APPROPRIATE PROTECTIVE CLOTHING TO PREVENT INJURY FROM CONTACT WITH A HAZARDOUS SUBSTANCE.
5. SPILLS OF TOXIC OR HAZARDOUS MATERIAL SHALL BE REPORTED TO THE APPROPRIATE STATE OR LOCAL GOVERNMENT AGENCY, REGARDLESS OF SIZE.
6. IF A SPILL OCCURS, THE SPILL PREVENTION PLAN SHALL BE ADJUSTED TO INCLUDE MEASURES TO PREVENT THIS PARTICULAR TYPE OF SPILL FROM REOCCURRING, AND HOW TO CLEAN UP THE SPILL. IF THERE IS ANOTHER ONE. A DESCRIPTION OF THE SPILL, WHAT CAUSED IT, AND THE CLEANUP MEASURES SHALL ALSO BE INCLUDED.
7. THE SITE SUPERINTENDENT SHALL BE THE SPILL PREVENTION AND CLEANUP COORDINATOR. HE WILL DESIGNATE AT LEAST TWO OTHER SITE PERSONNEL WHO WILL RECEIVE SPILL PREVENTION AND CLEANUP TRAINING. THESE INDIVIDUALS WILL EACH BECOME RESPONSIBLE FOR A PARTICULAR PHASE OF PREVENTION AND POSTED IN THE MATERIAL STORAGE AREA AND IN THE OFFICE.

TRAINING

EMPLOYEES AND CONTRACTOR PERSONNEL SHALL BE TRAINED IN THE FOLLOWING AREAS, AT LEAST ONCE PER YEAR:

A) PREVENTIVE MEASURES, INCLUDING SPILL PREVENTION AND RESPONSE, CONSTRUCTION ACTIVITY INSPECTIONS, AND PREVENTIVE MAINTENANCE.
B) POLLUTION CONTROL LAWS AND REGULATIONS.
C) THE CONSTRUCTION ACTIVITY'S SWPPP.
D) FEATURES AND OPERATIONS OF THE CONSTRUCTION ACTIVITY THAT ARE DESIGNED TO MINIMIZE DISCHARGES OF SECTION 313 WATER PRIORITY CHEMICALS, PARTICULARLY SPILL PREVENTION PROCEDURES.

1. SEDIMENT WATTLE SHOULD BE INSPECTED DURING THE NORMAL COURSE OF SWPPP INSPECTION AS OUTLINED IN THE GENERAL CONSTRUCTION PERMIT. INSPECTORS SHOULD NOTE ANY UV DEGRADATION OF THE MESH AND ANY TEARS WHICH WOULD PROVIDE A CHANNEL FOR TO WATER FLOW THROUGH THE MEDIA.

2. THE WATTLE SHOULD BE RELATIVELY UNIFORM IN APPEARANCE WITH EVEN DISTRIBUTION OF THE MEDIA INSIDE THE MESH. EXCESSIVE STRETCHING OR PULLING WHICH REDUCES THE OUTSIDE DIAMETER OF THE WATTLE BY MORE THAN 30% SHOULD NOT BE ALLOWED.

3. STAKING SHOULD BE SPACED SUFFICIENTLY TO KEEP THE SEDIMENT WATTLE IN PLACE WITHOUT SIGNIFICANT MOVEMENT WHEN FLOWS ARE PRESENT.

4. SEDIMENT WATTLES WILL BE PLACED AT LOCATIONS INDICATED ON THE PLANS AS DIRECTED BY THE ENGINEER. THE WATTLES SHOULD BE INSTALLED PARALLEL TO THE BASE OF THE SLOPE OR OTHER AFFECTED AREA, PERPENDICULAR TO THE WATER FLOW. MAY BE USED IN DIRECT FLOW SITUATIONS WITHIN RUNOFF CHANNELS OR WASHES.

5. SEDIMENT WATTLES SHOULD BE REGULARLY INSPECTED TO MAKE SURE THEY HOLD THEIR SHAPE AND ARE PRODUCING ADEQUATE FLOW THROUGH. IF PONDING BECOMES EXCESSIVE, AND SEDIMENT REACHES MORE THAN 50% OF THE HEIGHT OF THE WATTLE; EITHER ADDITIONAL WATTLES SHOULD BE ADDED TO THE TOP OF THE EXISTING WATTLES OR THE SEDIMENT SHOULD BE REMOVED TO THE ORIGINAL GRADE.

6. WHEN CONSTRUCTION IS COMPLETE, THE WATTLE MAY BE CUT OPEN AND THE MEDIA DISPERSED WITH A LOADER, RAKE, SKID STEER OR OTHER DEVICE TO BE INCORPORATED IN THE SOIL OR LEFT ON TOP OF THE SOIL FOR FINAL SEEDING TO OCCUR. IF A MESH WATTLE IS USED, THE NETTING MATERIAL WILL BE COLLECTED AND DISPOSED OF IN NORMAL TRASH CONTAINER OR REMOVED BY THE CONTRACTOR.

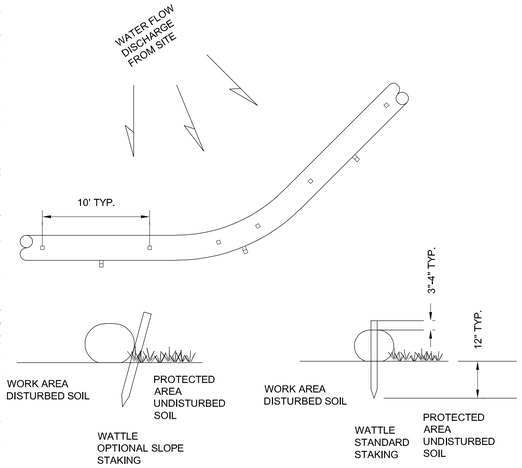

SW SEDIMENT WATTLE

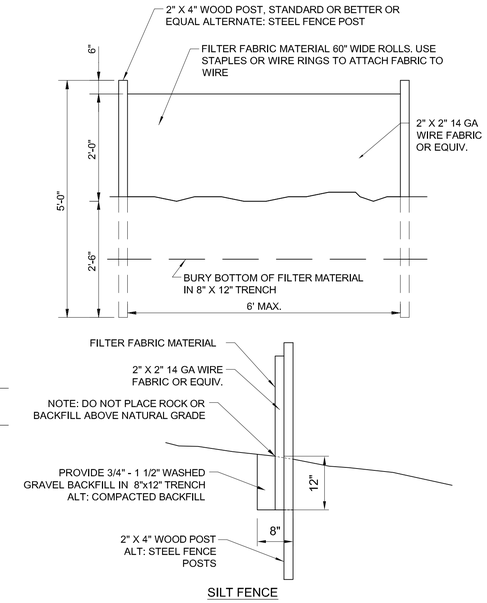

SILT FENCE

PC PERIMETER CONTROL
N.T.S.

CONCRETE TRUCK CLEANING AREA CONSTRUCTION SPECIFICATIONS:

1. BUILD A THREE SIDED DIKE.
2. BUILD DIKES TO BE 18" HIGHER THAN EXISTING GRADE.
3. DIKE SHOULD SLOPE DOWNWARD TOWARDS THE BACK OF THE WASH AREA SO WATER DOESN'T RUN OUT OF CLEANING AREA.
4. LINE THE PIT WITH PLASTIC SHEETING OF AT LEAST 10-MIL THICKNESS THAT HAS NO SEAMS.
5. MOVE TRUCK WASHOUT AS NECESSARY FOR CONSTRUCTION PHASING.
6. IF THE TRUCK WASH IS LOCATED ON FLAT GROUND, THAN A FOURTH DIKE SHALL BE CONSTRUCTED TO CONTAIN WASHOUT LIQUIDS.

MAINTENANCE:

1. INSPECT DIKES WEEKLY, AND AFTER ANY MAJOR STORM TO ENSURE THAT THEY ARE INTACT AND WILL NOT ALLOW ANY WATER TO RUN OUT OF CLEANING AREA.
2. THOROUGHLY CLEAN AND RESTORE AT THE CLOSE OF THE PROJECT AND DISPOSE OF EXCESS CONCRETE AT AN OFF-SITE APPROVED LOCATION.

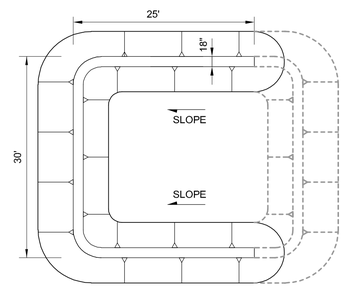

COMPACTED EARTH DIKE WITH 2:1 (H:V) SIDE SLOPES

TW CONCRETE TRUCK WASH
N.T.S.

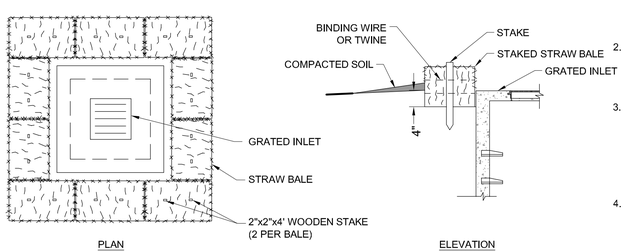

IP STRAW BALE INLET SEDIMENT FILTER
N.T.S.

GENERAL NOTES:

1. BALES SHALL BE EITHER WIRE-BOUND OR STRING-TIED WITH THE BINDINGS ORIENTED AROUND THE SIDES RATHER THAN OVER AND UNDER THE BALES.

2. BALES SHALL BE PLACED LENGTHWISE IN A SINGLE ROW SURROUNDING THE INLET, WITH ENDS OF ADJACENT BALES PRESSED TOGETHER.

3. THE BALE SHALL BE ENTRENCHED AND BACKFILLED. A TRENCH SHALL BE EXCAVATED AROUND THE INLET THE WIDTH OF A BALE TO A MINIMUM DEPTH OF 4 INCHES. AFTER THE BALES ARE STAKED, THE EXCAVATED SOIL SHALL BE BACKFILLED AND COMPACTED AGAINST THE FILTER BARRIER.

4. EACH BALE SHALL BE SECURELY ANCHORED AND HELD IN PLACE BY AT LEAST TWO STAKES OR REBARS DRIVEN THROUGH THE BALE.

5. LOOSE STRAW SHALL BE WEDGED BETWEEN BALES TO PREVENT WATER FROM ENTERING BETWEEN BALES.

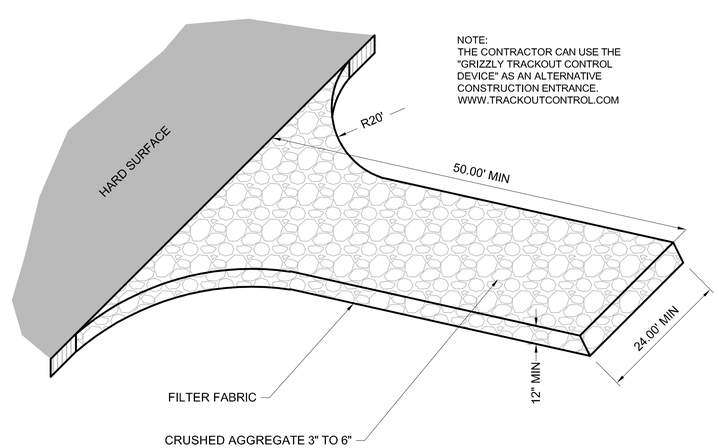

CE STABILIZED CONSTRUCTION ENTRANCE
N.T.S.

Contact Arizona 811 at least two full working days before you begin excavation
ARIZONA811 BLUE STAKE, INC.
Call 811 or click Arizona811.com

FINAL CONSTRUCTION DOCUMENTS PACKAGE

JSRa
JOHNSON SMITTHIPONG & ROSAMOND ASSOCIATES, INC.
5210 E Williams Cir • Ste 600• Tucson, AZ 85711
(520) 547-7904 • www.jsrarchinc.com

Consultants:

DOWL
WWW.DOWL.COM
430 W. Warner Road, #B101
Tempe, Arizona 85284
480-753-0800

Registered Professional Engineer (Civil) CERTIFICATE NO. 54744 ERIN R. O'BRIEN Date Signed 11/9/22 ARIZONA, U.S.A. Expires 06 / 30 / 2025

WHITERIVER ADMINISTRATION OFFICE BUILDING

200 W HOSPITAL DR
WHITERIVER, AZ 85941

HHSI102201800007I

U. S. DEPARTMENT OF HEALTH AND HUMAN SERVICES
INDIAN HEALTH SERVICE
PHOENIX AREA OFFICE

No.	Date	Description

Issue Date:	11/03/22
Project No:	3122.41629.02
Scale:	AS SHOWN
Drawn By:	EO
Checked By:	RI

FINAL CD

Sheet Title:

STORMWATER MANAGEMENT PLAN DETAILS

Sheet Number:

C601

Autodesk Docs://2022 Whiteriver Modular/21-020 06 Arch WRMOB 2022.rvt
5/17/2021 2:51:02 PM

PROPOSED OFFICE BUILDING
FFE= 5452.45

5452
5451
5450
5449
5448
5447
5446
5445
5444
5440

N

20 0 20 40
SCALE IN FEET

LEGEND

TW	CONCRETE TRUCK WASHOUT PER DETAIL ON SHEET C601
CE	STABILIZED CONSTRUCTION ENTRANCE PER DETAIL ON SHEET C601
PC	PERIMETER CONTROL PER DETAIL ON SHEET C601
IP	INLET PROTECTION PER DETAIL ON SHEET C601

FINAL CONSTRUCTION DOCUMENTS PACKAGE

Contact Arizona 811 at least two full working days before you begin excavation
ARIZONA811 BLUE STAKE, INC.
Call 811 or click Arizona811.com

JSRa
JOHNSON SMITTHIPONG & ROSAMOND ASSOCIATES, INC.
5210 E Williams Cir • Ste 600• Tucson, AZ 85711
(520) 547-7904 • www.jsrarchinc.com

Consultants:

DOWL
WWW.DOWL.COM
430 W. Warner Road, #B101
Tempe, Arizona 85284
480-753-0800

Registered Professional Engineer (Civil)
CERTIFICATE NO. 54744
ERIN R. O'BRIEN
Date Signed 11/3/22
ARIZONA, U.S.A.
Expires 06 / 30 / 2025

WHITERIVER ADMINISTRATION OFFICE BUILDING

200 W HOSPITAL DR
WHITERIVER, AZ 85941

HHSI102201800007I

U. S. DEPARTMENT OF HEALTH AND HUMAN SERVICES
INDIAN HEALTH SERVICE
PHOENIX AREA OFFICE

No.	Date	Description

Issue Date:	11/03/22
Project No:	3122.41629.02
Scale:	AS SHOWN
Drawn By:	EO
Checked By:	RI

FINAL CD

Sheet Title:

STORMWATER MANAGEMENT PLAN

Sheet Number:

C602

Autodesk Docs://2022 Whiteriver Modular/21-020 06 Arch WRMOB 2022.rvt
5/17/2021 2:51:02 PM

GENERAL STRUCTURAL NOTES

(APPLY UNLESS NOTED OTHERWISE)

DESIGN CRITERIA:

2018 EDITION OF THE INTERNATIONAL BUILDING CODE, WITH LOCAL AMENDMENTS.
RISK CATEGORY II.

LOADS:

ROOF LIVE LOAD = 20 PSF (REDUCIBLE).
ROOF RAIN LOAD DESIGN DATA, i = 3 IN/HR.
GROUND SNOW LOAD = 10 PSF. FLAT ROOF SNOW LOAD Pf= 10 PSF. Ce = 1.0.
Is = 1.0. Ct = 1.0, Cs = 1.0, Pd = 10 PSF,
WIND DESIGN: BASIC WIND SPEED(V) = 120 MPH (3 SECOND GUST). ALLOWABLE STRESS DESIGN WIND SPEED (Vasd) = 93 MPH. EXPOSURE C.
SEISMIC DESIGN: Ie = 1.0. Ss = 1.249. S1 = 0.0177. SOIL SITE CLASS = D.
Sds = 0.265. SEISMIC DESIGN CATEGORY B. INTERMEDIATE REINFORCED

GENERAL:

1. THE STRUCTURAL CONSTRUCTION DOCUMENTS REPRESENT THE FINISHED STRUCTURE. THEY DO NOT INDICATE THE METHOD OR SEQUENCE OF CONSTRUCTION. THE CONTRACTOR SHALL BE RESPONSIBLE FOR AND PROVIDE ALL MEASURES NECESSARY TO PROTECT THE STRUCTURE DURING CONSTRUCTION. SUCH MEASURES SHALL INCLUDE, BUT NOT BE LIMITED TO, BRACING, SHORING FOR LOADS DUE TO CONSTRUCTION EQUIPMENT, ETC. THE STRUCTURAL ENGINEER SHALL NOT BE RESPONSIBLE FOR THE CONTRACTOR'S MEANS, METHODS, TECHNIQUES, SEQUENCES FOR PROCEDURE OF CONSTRUCTION, OR THE SAFETY PRECAUTIONS AND THE PROGRAMS INCIDENT THERETO (NOR SHALL OBSERVATION VISITS TO THE SITE INCLUDE INSPECTION OF THESE ITEMS). THE CONTRACTOR SHALL BE RESPONSIBLE FOR THE DESIGN AND IMPLEMENTATION OF ALL SCAFFOLDING, BRACING AND SHORING.

2. CONSTRUCTION MATERIALS SHALL BE SPREAD OUT IF PLACED ON FRAMED CONSTRUCTION. LOAD SHALL NOT EXCEED THE DESIGN LIVE LOAD PER SQUARE FOOT.

3. WHERE REFERENCE IS MADE TO VARIOUS TEST STANDARDS FOR MATERIALS, SUCH STANDARDS SHALL BE THE LATEST EDITION AND/OR ADDENDA.

4. ESTABLISH AND VERIFY ALL OPENINGS AND INSERTS FOR ARCHITECTURAL, MECHANICAL, PLUMBING, AND ELECTRICAL WITH APPROPRIATE TRADES, DRAWINGS, AND SUBCONTRACTORS PRIOR TO CONSTRUCTION.

5. OPTIONS ARE FOR CONTRACTOR'S CONVENIENCE. IF AN OPTION IS CHOSEN, THE CONTRACTOR SHALL BE RESPONSIBLE FOR ALL NECESSARY CHANGES AND SHALL COORDINATE ALL DETAILS WITH ALL TRADES.

6. NOTES AND DETAILS ON DRAWINGS SHALL TAKE PRECEDENCE OVER GENERAL STRUCTURAL NOTES AND TYPICAL DETAILS. WHERE NO DETAILS ARE SHOWN, CONSTRUCTION SHALL CONFORM TO SIMILAR WORK ON THE PROJECT. FOR BIDDING PURPOSES, WHERE ANY MEMBER IS SHOWN BUT NOT CALLED OUT, THE LARGEST SIMILAR MEMBER SHALL BE UTILIZED.

7. THE CONTRACTOR SHALL BE RESPONSIBLE FOR VERIFICATION OF ALL DIMENSIONS WITH ARCHITECTURAL DRAWINGS PRIOR TO START OF CONSTRUCTION. RESOLVE ANY DISCREPANCY WITH THE ARCHITECT. DO NOT USE SCALED DIMENSIONS.

8. ALL DETAILS SHALL BE INCORPORATED INTO THE PROJECT AT ALL APPROPRIATE LOCATIONS, WHETHER SPECIFICALLY CUT OR NOT. TYPICAL DETAILS MAY NOT NECESSARILY BE CUT ON PLANS, BUT APPLY UNLESS NOTED OTHERWISE. FOR CLARITY, DETAILS MAY SHOW ONLY ONE SIDE OF FRAMING CONDITION.

9. WHERE DISCREPANCIES OCCUR BETWEEN PLANS, DETAILS, GENERAL STRUCTURAL NOTES AND SPECIFICATIONS, THE GREATER REQUIREMENTS SHALL GOVERN.

10. ANY ENGINEERING DESIGN, PROVIDED BY OTHERS AND SUBMITTED FOR REVIEW, SHALL BEAR THE SEAL OF AN ENGINEER REGISTERED IN THE STATE IN WHICH THE PROJECT OCCURS.

FOUNDATIONS:

1. SOIL REPORT BY ATEK ENGINEERING CONSULTANTS; PROJECT NO. 200276. SPREAD FOOTINGS SHALL BEAR ON CONTROLLED COMPACTED FILL 2'-0" MINIMUM BELOW FINISHED GRADE. FINISHED GRADE IS DEFINED AS TOP OF SLAB FOR INTERIOR FOOTINGS AND LOWEST ADJACENT GRADE WITHIN 5 FEET FOR PERIMETER FOOTINGS. DESIGN SOIL BEARING VALUE =2000 PSF. FOUNDATION EXCAVATIONS SHALL BE INSPECTED BY SOILS ENGINEER PRIOR TO PLACEMENT OF CONCRETE.

2. REMOVE TOPSOIL, ORGANIC MATERIAL, AND DEBRIS FROM BUILDING TO THE REQUIRED DEPTH PER SOILS REPORT.

3. FOOTING BEARING: ON 2'-0" OF COMPACTED STABILIZED SOIL AND SHALL EXTEND 2'-0" FROM ALL EDGES OF FOOTING (UNLESS OTHERWISE INSTRUCTED BY THE GEOTECHNICAL ENGINEER).

4. CONCRETE SLABS ON GRADE: ON 4" OF CLEAN WASHED AGGREGATE AND A MINIMUM OF 18" OF COMPACTED STABILIZED SOIL (UNLESS OTHERWISE NOTED BY THE GEOTECHNICAL ENGINEER). OMIT 2" SAND AND VAPOR BARRIER AT SLABS 12" AND THICKER.

5. COMPACTION REQUIREMENTS (ASTM D1557):

   BELOW FOOTINGS ----------- 95%
   BELOW SLABS AND PAVEMENT --- 95%
   UNPAVED AREAS ----------- 90%
   MAXIMUM LIFT ------------- 6" LOOSE DEPTH

6. SUBGRADE: SCARIFY AND RECOMPACT TOP 8" OF SOIL.

7. BACKFILL: DO NOT PLACE AGAINST BASEMENT WALLS UNTIL FIRST FLOOR IS PERMANENTLY ATTACHED. DO NOT EXCEED 1'-0" DIFFERENTIAL IN FILL LEVEL ON OPPOSITE SIDES OF FOUNDATION WALLS.

8. DRAINAGE: PROVIDE POSITIVE SLOPES, BOTH DURING AND AFTER CONSTRUCTION, FOR SURFACE AND ROOF RUNOFF. MINIMUM 10'-0" FROM BUILDING FOUNDATIONS.

9. ALL EARTHWORK SHALL BE INSPECTED AND APPROVED BY THE GEOTECHNICAL ENGINEER.

10. THE STRUCTURES SHALL ALSO BE PROTECTED AT THE BUILDING PERIMETER AND ALONG LARGE CUTS BY FOUNDATION AND GROUNDWATER INCEPTION DRAINS, DESIGNED TO REMOVE GROUNDWATER MOVING LATERALLY ACROSS THE SITE. DRAINS MAY ALSO BE NEEDED FOR THE INTERIOR PORTIONS OF THE BUILDINGS SHOULD EVIDENCE OF SEEPAGE OR OTHER HYDRAULIC ACTIVITY BE EXPOSED IN THE SUBGRADE DURING SITE PREPARATION. INTERNAL DRAINS WILL BE CONNECTED TO THE PERIMETER FOOTING DRAINS. THIS NEED SHALL BY DETERMINED BY THE GEOTECHNICAL ENGINEE**R.**

CONCRETE:

1. ALL CONCRETE WORK SHALL CONFORM TO THE REQUIREMENTS OF ACI 301 AND ACI 318. CEMENT SHALL CONFORM TO ASTM C150, TYPE II. AGGREGATE SHALL CONFORMTO ASTM C33. CONCRETE SHALL BE READY MIXED IN ACCORDANCE WITH ASTM C94 AND SHALL BE DESIGNED FOR A MINIMUM 28-DAY COMPRESSIVE STRENGTH AS FOLLOWS:

   SLABS ON GRADE -- 3,000 PSI
   FOUNDATIONS --- 3,000 PSI

2. FLY ASH - SHALL CONFORM TO ASTM C618, CLASS F AND SHALL BE LIMITED TO 25% OF CEMENTITIOUS MATERIALS BY WEIGHT AND SHALL HAVE A REPLACEMENT FACTOR OF 1.2 RELATIVE TO CEMENT REPLACED. CONCRETE SHALL BE FREE OF CHLORIDE. MAXIMUM SLUMP 4 1/2" FOR CONCRETE WITHOUT PLASTICIZER. IF PLASTICIZER IS USED, AN 8" MAXIMUM SLUMP IS ALLOWED AT PLACEMENT. ALL MIX DESIGNS SHALL BE DESIGNED BY THE CONCRETE PRODUCTION FACILITY IN ACCORDANCE WITH ACI 301 AND SHALL BE REVIEWED BY THE STRUCTURAL ENGINEER PRIOR TO PLACEMENT. MIX DESIGNS FOR POST-TENSIONING CONCRETE SHALL BE PROPORTIONED SO AS TO MINIMIZE SHRINKAGE CRACKING.

3. MECHANICALLY VIBRATE ALL CONCRETE WHEN PLACED, EXCEPT THAT SLABS ON GRADE NEED BE VIBRATED ONLY AROUND UNDER-FLOOR DUCTS, ETC. DO NOT DROP CONCRETE MORE THAN FIVE FEET WITH OUT THE USE OF TREMIES. REVIBRATE TOPS OF CAISSONS 15 MINUTES AFTER PLACING CONCRETE. UNLESS APPROVED OTHERWISE IN WRITING BY THE ARCHITECT, ALL CONCRETE SLABS ON GRADE SHALL BE BOUND BY CONTROL JOINTS (KEYED OR SAW CUT), AS SHOWN ON THE FOUNDATION PLAN, SUCH THAT THE ENCLOSED AREA DOES NOT EXCEED 225 SQUARE FEET. KEYED CONTROL JOINTS NEED ONLY OCCUR AT EXPOSED EDGES DURING POURING, ALL OTHER JOINTS MAY BE SAW CUT. CAST CLOSURE POUR AROUND COLUMNS AFTER COLUMN DEAD LOAD IS APPLIED.

4. PROVIDE SLEEVES FOR ALL UTILITY OPENINGS. DO NOT CUT ANY REINFORCING AT OPENINGS. CONCRETE WHICH HAS CONTAINED WATER FOR MORE THAN 90 MINUTES (60 MINUTES IF AIR TEMPERATURE EXCEEDS 85 DEGREES) SHALL NOT BE USED. RETEMPERING OF CONCRETE AFTER INITIAL SET IS NOT ALLOWED. CURE EXPOSED CONCRETE PER ACI 301 FOR A MINUMUM OF 7 DAYS.

5. TESTING OF COMPRESSIVE STRENGTH AND SLUMP SHALL CONFORM TO ASTM C31, C39 AND C143. PROVIDE A MINIMUM OF 3 CYLINDERS FOR EACH DAY'S PLACEMENT U.N.O. A QUALIFIED TESTING LABORATORY SHALL TEST ONE CYLINDER AT 7 DAYS AND TWO CYLINDERS AT 28 DAYS, THREE CYLINDERS IF 4"X8" SAMPLES ARE USED.

6. MACRO FIBER - HIGH VOLUME SYNTHETIC FIBER MAY BE SUBSTITUTED AT A RATE OF 4 POUNDS PER CUBIC YARD OF CONCRETE FOR WELDED WIRE FABRIC IN SLABS ON GRADE AND SLABS ON METAL DECK. ACCEPTABLE PRODUCTS INCLUDE GRACE STRUX 90/40, PROPEX FIBERMESH 650, EUCLID TUF-STRAND SF, FORTA FERRO.

MASONRY:

1. C.M.U. SHALL CONFORM TO ASTM C90, NORMAL OR MEDIUM WEIGHT, F'm =2,000 PSI AT 28 DAYS, RUNNING BOND, WITH A NET COMPRESSIVE STRENGTH OF 2000 PSI PER ASTM C140.

2. MORTAR SHALL CONFORM TO ASTM C270, TYPE S, 2,000 PSI USING PORTLAND CEMENT. FINE OR COURSE GROUT PER ASTM C476, 2,000 PSI AT 28 DAYS, TESTED PER ASTM C1019. GROUT SHALL BE FREE OF CHLORIDE. GROUT MAY CONTAIN UP TO 18% FLY ASH AT THE APPROVAL OF THE ARCHITECT.

3. SEE DRAWINGS FOR SIZE AND SPACING OF REINFORCING. LAP SPLICE ALL REINFORCING A MINIMUM OF 40 BAR DIAMETERS FOR GRADE 40 BARS AND 48 BAR DIAMETERS FOR GRADE 60 BARS. LAP SPLICES SHALL BE 1.3 X LAP LENGTH WHEN ADJACENT SPLICES ARE SEPARATED BY 3" OR LESS. ALL REINFORCING SHALL BE ACCURATELY LOCATED PRIOR TO AND DURING GROUTING. TIE ALL VERTICAL REINFORCING AT 8'-0" VERTICALLY WITH SINGLE WIRE LOOP TIE BY A.A. WIRE PRODUCTS COMPANY. DOWEL ALL VERTICAL REINFORCING TO FOUNDATION WITH DOWELS TO MATCH SIZE AND SPACING OF VERTICAL REINFORCING. PROVIDE BENT BARS TO MATCH HORIZONTAL BOND BEAM REINFORCING AT CORNERS AND WALL INTERSECTIONS.

4. HORIZONTAL JOINT REINFORCING SHALL BE 9 GAGE LADDER OR TRUSS TYPE JOINT REINFORCEMENT PER ASTM A82 AT 16" O.C. WITH 12" SPLICES. USE TRUSS TYPE JOINT REINFORCEMENT IN BRICK OR COMPOSITE WALLS.

5. ALL CELLS AND COURSES WITH REINFORCING AND ADDITIONAL CELLS AND COURSES NOTED ON DRAWINGS SHALL BE GROUTED SOLID. ALL MASONRY BELOW FINISHED FLOOR OR GRADE SHALL BE GROUTED SOLID. MECHANICALLY VIBRATE GROUT IN VERTICAL SPACES IMMEDIATELY AFTER POURING AND AGAIN ABOUT 5 MINUTES LATER. PROVIDE CLEANOUTS IF GROUT POUR HEIGHT EXCEEDS 5'-4" IN BLOCK WALLS. IF THE MASONRY HAS CURED FOR AT LEAST 4 HOURS, THE GROUT SLUMP IS MAINTAINED BETWEEN 10" AND 11", AND NO INTERMEDIATE BOND BEAMS ARE PLACED BETWEEN THE TOP AND BOTTOM OF THE POUR HEIGHT, THEN GROUT MAY BE PLACED IN LIFTS UP TO 12'-8" TALL. STOP ALL GROUT LIFTS 1-1/2" BELOW THE TOP COURSE OF THE LIFT. PLACE GROUT LIFTS CONTINUOUS FOR HEIGHT OF LINTELS. DO NOT INTERRUPT GROUTING FOR MORE THAN ONE HOUR. FOG SPRAY ERECTED CMU EVERY 8 HOURS FOR 48 HOURS FOLLOWING INSTALLATION WHEN TEMPERATURES EXCEED 100 DEGREES OR WHEN THE TEMPERATURE EXCEEDS 90 DEGREES AND THE WIND SPEED IS GREATER THAN 8 MPH.

6. ADHERED VENEER SHALL WEIGH LESS THAN 15 PSF. ADHESION DEVELOPED BETWEEN ADHERED VENEER UNITS AND BACKING SHALL HAVE A SHEAR TRANSFER STRENGTH OF AT LEAST 50 PSI BASED ON GROSS UNIT SURFACE AREA.

REINFORCING STEEL:

1. LATEST ACI CODE AND DETAILING MANUAL APPLY.

2. REINFORCING STEEL SHALL CONFORM TO ASTM A615 (Fy = 60 KSI) DEFORMED BARS FOR ALL REBAR. ALL REINFORCING TO BE WELDED SHALL BE ASTM A706. WELDED WIRE FABRIC PER ASTM A185, WIRE PER ASTM A82. NO TACK WELDING OF REINFORCINGBARS ALLOWED WITHOUT PRIOR REVIEW OF PROCEDURE WITH THE STRUCTURAL ENGINEER.

3. ACCURATELY PLACE OR SUPPORT ALL REINFORCING, INCLUDING WELDED WIRE FABRIC, WITH GALVANIZED METAL CHAIRS, SPACERS OR HANGERS FOR THE FOLLOWING CLEAR CONCRETE COVERAGES:

   CAST AGAINST AND PERMANENTLY EXPOSED TO EARTH --- 3"
   EXPOSED TO EARTH OR WEATHER
   #6 OR LARGER -- 2"
   #5 AND SMALLER -- 1 1/2"
   ALL OTHER PER LATEST EDITION OF ACI 318.

4. LAP SPLICES, UNLESS NOTED OTHERWISE, SHALL BE CLASS "B" TENSION LAP SPLICES PER LATEST EDITION OF ACI 318. LAP SPLICES IN CONCRETE COLUMNS SHALL BE STANDARD COMPRESSION LAP SPLICES. STAGGER SPLICES A MINIMUM OF ONE LAP LENGTH. LAPS IN WELDED WIRE FABRIC SHALL BE MADE SO THAT THE OVERLAP, MEASURED BETWEEN OUTERMOST CROSS WIRES OF EACH FABRIC SHEET, IS NOT LESS THAN THE SPACING OF CROSS WIRES PLUS 2 INCHES.

5. ALL SPLICE LOCATIONS ARE SUBJECT TO APPROVAL BY THE STRUCTURAL ENGINEER. SPLICED BARS SHALL BE PLACED AT THE SAME EFFECTIVE DEPTH U.N.O. ALL REINFORCING NOTED AS "CONTINUOUS" SHALL BE FULLY CONTINUOUS AND SPLICED. PROVIDE BENT CORNER BARS TO MATCH AND LAP WITH HORIZONTAL BARS AT ALL CORNERS AND INTERSECTIONS PER TYPICAL DETAILS.

6. REINFORCING BAR SPACING GIVEN ARE MAXIMUM ON CENTERS. ALL BARS PER CRSI SPECIFICATIONS AND HANDBOOK. DOWEL ALL VERTICAL REINFORCING TO FOUNDATION WITH STANDARD 90 DEGREE HOOKS UNLESS NOTED OTHERWISE. SKEW HOOKS AS REQUIRED TO MAINTAIN CONCRETE COVER. SECURELY TIE ALL BARS IN LOCATION BEFORE PLACING CONCRETE. CONCRETE COLUMN DOWEL EMBEDMENT SHALL BE A STANDARD COMPRESSION DOWEL WITH EMBEDMENT LENGTH ACCORDING TO THE LATEST EDITION OF ACI 318.

STRUCTURAL STEEL:

1. ALL STEEL CONSTRUCTION SHALL CONFORM WITH THE LATEST AISC HANDBOOK.ALL STRUCTURAL STEEL W SECTIONS SHALL BE ASTM A992 (Fy = 50 KSI). ALLRECTANGULAR HSS SHALL BE ASTM A500, GRADE B (Fy = 46 KSI). ALL ROUND HSSSHALL BE ASTM A500, GRADE B (Fy = 42 KSI). ALL PIPE STEEL SHALL BEASTM A53, GRADE B (Fy = 35 KSI). ALL OTHER STRUCTURAL SHAPES ANDPLATES SHALL BE ASTM A36 (Fy = 36 KSI). SHOP PAINT ALL STEEL SURFACES WITHFABRICATOR'S STANDARD RUST-INHIBITING PRIMER EXCEPT AT SURFACES ENCASEDIN CONCRETE, SURFACES TO RECEIVE FIREPROOFING, OR SURFACES ENCLOSED WITHINTHE BUILDING FINISHES. BEAMS, COLUMNS AND BRACES SHALL NOT BE SPLICEDWITHOUT THE PRIOR APPROVAL OF THE STRUCTURAL ENGINEER.

2. BOLTS SHALL BE ASTM A307, UNLESS NOTED OTHERWISE. ANCHOR BOLTS SHALL BEASTM A36 OR A307, GRADE A. ANCHOR RODS SHALL BE ASTM F1554, GRADE 36.THREADED RODS SHALL BE ASTM A36.

3. ALL WELDING PER LATEST AMERICAN WELDING SOCIETY STANDARDS. ALL WELDINGSHALL BE PERFORMED BY WELDERS HOLDING VALID CERTIFICATES AND HAVING CURRENTEXPERIENCE IN THE TYPE OF WELD SHOWN ON THE DRAWINGS OR NOTES. CERTIFICATESSHALL BE THOSE ISSUED BY AN ACCEPTED TESTING AGENCY. ALL WELDING DONE BYE70 SERIES LOW HYDROGEN RODS UNLESS NOTED OTHERWISE. FOR GRADE 60REINFORCING BARS, USE E80 SERIES. THESE DRAWINGS DO NOT DISTINGUISH BETWEENSHOP AND FIELD WELDS; THE CONTRACTOR MAY SHOP WELD OR FIELD WELD AT HISDISCRETION. SHOP WELDS AND FIELD WELDS SHALL BE SHOWN ON THE SHOP DRAWINGSSUBMITTED FOR REVIEW.

4. NON-SHRINK GROUT SHALL BE 5,000 PSI, FIVE STAR, SIKA 212 OR EQUIVALENT. INSTALL NON-SHRINK GROUT UNDER BEARING PLATES BEFORE FRAMING MEMBER IS INSTALLED. AT COLUMNS, INSTALL NON-SHRINK GROUT UNDER BASEPLATES AFTER COLUMN HAS BEEN PLUMBED BUT PRIOR TO FLOOR OR ROOF INSTALLATION.

LOW VELOCITY POWDER ACTUATED FASTENERS (P.A.F.):

1. LOW VELOCITY P.A.F. SHALL BE SIMPSON PDPAWL FASTENERS WITH A MINIMUM SHANK DIAMETER OF .157" INSTALLED AND COMPLYING WITH ICC ES REPORT NO. 2138.

POST-INSTALLED ANCHORS:

1. EPOXY BOLTS OR DOWELS SHALL BE A THREADED ROD OR REINFORCING STEEL INSTALLED WITH THE ONE OF THE FOLLOWING APPROVED PRODUCTS SATISFYING CRACKED CONCRETE REQUIREMENTS IN ACCORDANCE WITH ACI APPENDIX D.

SIMPSON	"SET-3G"	ICC REPORT ESR-4057
DEWALT	"PURE110+"	ICC REPORT ESR-3298
DEWALT	“AC200+”	ICC REPORT ESR-4027

2. EXPANSION BOLTS FOR CONCRETE SHALL BE ONE OF THE FOLLOWING APPROVED PRODUCTS SATISFYING CRACKED CONCRETE REQUIREMENTS IN ACCORDANCE WITH ACI APPENDIX D.

HILTI	"KWIK BOLT TZ"	ICC REPORT ESR-1917
HILTI	"HDA UNDERCUT ANCHOR"	ICC REPORT ESR-1546
HILTI	"HSL-3 HD EXPANSION ANCHOR"	ICC REPORT ESR-1545
SIMPSON	"STRONG BOLT 2 WEDGE ANCHOR"	ICC REPORT ESR-3037
SIMPSON	"TORQ-CUT"	ICC REPORT ESR-2705
DEWALT	“POWER-STUD+SD1 WEDGE ANCHOR”	ICC REPORT ESR-2818
DEWALT	“POWER-STUD+SD2 WEDGE ANCHOR”	ICC REPORT ESR-2502
DEWALT	“ATOMIC+UNDERCUT ANCHOR”	ICC REPORT ESR-3067
DEWALT	“POWER-BOLT+ EXPANSION ANCHOR”	ICC REPORT ESR-3260

3. SCREW BOLTS FOR CONCRETE SHALL BE ONE OF THE FOLLOWING APPROVED PRODUCTS SATISFYING CRACKED CONCRETE REQUIREMENTS IN ACCORDANCE WITH ACI APPENDIX D.

SIMPSON	"TITEN HD"	ICC REPORT ESR-2713
DEWALT	“SCREW-BOLT+”	ICC REPORT ESR-3889

4. THE CONTRACTOR MAY NOT USE SUBSTITUTES FOR EPOXY OR EXPANSION ANCHORS WITHOUT PRIOR APPROVAL OF THE STRUCTURAL ENGINEER.

5. FOR MINIMUM EMBEDMENT LENGTH SEE DETAILS. INSTALL ALL BOLTS AS OUTLINED IN MANUFACTURER'S SPECIFICATIONS, UTILIZING PROPER SIZE AND TYPE OF DRILL, CLEANING HOLE, DRIVING AND TIGHTENING BOLT.

6. SPECIAL INSPECTION OF ALL POST-INSTALLED ANCHORS IS REQUIRED.

ROUGH CARPENTRY AND WOOD STRUCTURAL PANELS:

1. ALL FRAMING PER IBC CHAPTER 23. FRAMING LUMBER SHALL COMPLY WITH THE 2015 EDITION OF THE NATIONAL DESIGN SPECIFICATION. MAXIMUM MOISTURE CONTENT SHALLNOT EXCEED 19%. ALL SAWN LUMBER SHALL BE STAMPED WITH THE GRADE MARK OF ANAPPROVED LUMBER GRADING AGENCY. ALL SAWN LUMBER SHALL BE DOUGLAS FIR-LARCHWITH THE FOLLOWING MINIMUM PROPERTIES:

   WOOD TYPE
   JOISTS 2 X 4 --------------------- D.F. #2
   2 X 6 OR LARGER ------------ D.F. #2

   BEAMS, LEDGERS AND TOP PLATES
   WIDTH 4" OR LESS ------------- D.F. #2
   WIDTH GREATER THAN 4" --------- D.F. #1

   STUDS, PLATES AND BLOCKING
   2 X 4 --------------------- D.F. #2
   2 X 6 OR LARGER ------------ D.F. #2

   POSTS
   4 X 4 --------------------- D.F. #2
   4 X 6 OR LARGER ------------ D.F. #2
   6 X 6 OR LARGER ------------ D.F. #1

2. ALL WOOD STRUCTURAL PANELS SHALL CONFORM TO DOC PS-1 OR PS-2 STANDARDS,SHALL HAVE AN EXTERIOR OR EXPOSURE 1 CLASSIFICATION AND SHALL BEAR THESTAMP OF AN APPROVED TESTING AGENCY. WHERE PLYWOOD IS USED, LAY UP PLYWOODWITH FACE GRAIN PERPENDICULAR TO SUPPORTS AND STAGGER JOINTS. ON ROOFS WHERE PLYWOOD IS LAID UP WITH FACE GRAIN PARALLEL TO SUPPORTS, USE A MINIMUMOF 5-PLY PLYWOOD. AT SHEARWALLS, PROVIDE 2X BLOCKING AT ALL UNSUPPORTED EDGES. ALL NAILING, COMMON NAILS. WHERE SCREWS ARE INDICATED FOR WOOD TO WOOD ATTACHMENTS, USE WOOD SCREWS. ALL WOOD STRUCTURAL PANELS SHALL BE OF THE FOLLOWING NOMINAL THICKNESS, SPAN/INDEX RATIO AND SHALL BE ATTACHED ASFOLLOWS UNLESS NOTED OTHERWISE:

USE	THICKNESS	SPAN/INDEX RATIO	EDGE ATTACHMENT	INTERMEDIATE ATTACHMENT
ROOF	1/2"	32/16	8d AT 6" O.C.	8d AT 12" O.C.
SHEAR WALL	3/8"	24/0	8d @ 6" O.C. U.N.O.	8d @ 12" O.C. U.N.O.

3. DO NOT NOTCH, DRILL OR SPLICE JOISTS, BEAMS OR LOAD BEARING STUDS WITHOUT PRIOR APPROVAL OF THE STRUCTURAL ENGINEER THRU THE ARCHITECT. DOUBLE UPFLOOR JOISTS AND BLOCKING UNDER PARTITIONS. DOUBLE UP JOISTS BELOWMECHANICAL EQUIPMENT. PROVIDE 2" SOLID BLOCKING AT MIDSPAN AND AT SUPPORTSOF ALL JOISTS.

4. STUD WALLS SHALL BE 2 X 6 AT 16" O.C. U.N.O. ON PLANS. BOTTOM PLATE ANCHORSAT CONCRETE FOUNDATIONS SHALL BE SIMPSON MASA CLIPS AT 6'-0" O.C. MAXIMUM U.N.O. ANCHORS SHALL BE PLACED AT ALL JAMBS, CORNERS,INTERSECTIONS AND ENDS OF WALLS. ALL LUMBER ON CONCRETE OR MASONRYFOUNDATIONS SHALL BE PRESSURE TREATED WOOD STAMPED BY AN APPROVED AGENCY.

5. DOUBLE UP STUDS AT JAMBS AND AS REQUIRED UNDER BEAMS IN BEARING WALLS.EVERY OTHER STUD OF WOOD FRAME BEARING WALL SHALL HAVE A SIMPSON H3 ANCHORTOP AND BOTTOM, EXCEPT AT THOSE WALLS WHERE PLYWOOD SHEATHING IS NAILEDDIRECTLY TO THE TOP AND BOTTOM PLATES. PROVIDE 2 X SOLID BLOCKING AT MID-HEIGHT OF BEARING STUD WALLS.

6. ALL NAILING NOT NOTED SHALL BE ACCORDING TO TABLE 2304.9.1 OF THE INTERNATIONAL BUILDING CODE. ALL NAILS SHALL BE WITH COMMON NAILS. WOOD CONNECTORS SHALL BE AS MANUFACTURED BY SIMPSON STRONG-TIE COMPANY, INC. OROTHER MANUFACTURER WITH CURRENT AND EQUIVALENT I.C.B.O. APPROVAL. ALL NAILHOLES IN CONNECTORS SHALL BE FILLED WITH NAIL OF THE LARGEST SIZE INDICATEDIN THE MANUFACTURER'S CATALOG U.N.O.

7. ALL FABRICATION SHALL BE PERFORMED ON THE PREMISES OF A FABRICATORREGISTERED AND APPROVED TO PERFORM SUCH WORK WITHOUT SPECIAL INSPECTION.

SCHNEIDER
STRUCTURAL ENGINEERS
CREATING ELEGANT SOLUTIONS
435 East 9th Street | Tucson, AZ 85705 | 520.512.8183 | www.sastructural.com
Project Number: 121083

UNLESS THIS DRAWING IS SIGNED AND SEALED BY A LICENSED STRUCTURAL ENGINEER, IT IS A PRELIMINARY DESIGN AND SHALL NOT BE USED FOR CONSTRUCTION.

JSRa
JOHNSON SMITTHIPONG & ROSAMOND ASSOCIATES, INC.
5210 E Williams Cir • Ste 600 • Tucson, AZ 85711
(520) 547-7904 • www.jsrarchinc.com

Consultants:

This Electronic Signature Has Been Authorized By Me This November 01, 2022
Registered Professional Engineer (Structural) CERTIFICATE NO. 45715 DAVID N. GIBBENS DATE SIGNED 11/01/22 ARIZONA, U.S.A.

WHITERIVER ADMINISTRATION OFFICE BUILDING

200 W HOSPITAL DR
WHITERIVER, AZ 85941

U. S. DEPARTMENT OF HEALTH AND HUMAN SERVICES
INDIAN HEALTH SERVICE
PHOENIX AREA OFFICE

No.	Date	Description

Issue Date:	11/3/2022
Project No:	21-020
Scale:	As Indicated
Drawn By:	SRK
Checked By:	DNG

FINAL CD

Sheet Title:

G.S.N.

Sheet Number:

S101

Autodesk Docs://21-020 Whiteriver Admin v2022/21-020 05 Strc WR Admin 2022.rvt
11/1/2022 7:01:04 AM

GLUED-LAMINATED BEAMS (GLULAM):

1. GLUED-LAMINATED BEAMS SHALL BE DOUGLAS FIR LARCH WITH THE FOLLOWING MINIMUM PROPERTIES: Fb = 2,400 PSI, Fv = 265 PSI, Fc (PERPENDICULAR) = 650 PSI, E = 1,800,000 PSI. BEAMS CANTILEVERING OVER SUPPORTS SHALL HAVE THE SPECIFIED MINIMUM PROPERTIES TOP AND BOTTOM.

2. CAMBER AS SHOWN ON DRAWINGS. IF NO CAMBER IS SPECIFIED, PROVIDE STANDARD CAMBER USING A RADIUS OF 3500 FEET.

3. ALL BEAMS SHALL BE FABRICATED USING WATERPROOF GLUE. FABRICATION AND HANDLING PER LATEST AITC AND WCLA STANDARDS. BEAMS SHALL BEAR GRADE STAMP AND AITC STAMP AND CERTIFICATE. APPEARANCE GRADE BEAMS SHALL BE USED IF INDICATED ON ARCHITECTURAL DRAWINGS.

PREFABRICATED WOOD TRUSSES:

1. THE TRUSS MANUFACTURER SHALL BE RESPONSIBLE FOR THE COMPLETE DESIGN, FABRICATION AND ERECTION PROCEDURES OF ALL TRUSSES, BRIDGING AND/OR BLOCKING PANELS, HANGERS, BRACING, ETC. FOR A COMPLETE INSTALLATION OF THE TRUSSSYSTEM. TRUSS CONFIGURATIONS ARE AS SHOWN ON THE DRAWINGS. ALL BRACING ANDBRIDGING SIZES AND SPACINGS BY TRUSS MANUFACTURER IN ACCORDANCE WITH THELATEST RECOMMENDATIONS OF THE TRUSS PLATE INSTITUTE.

2. TRUSSES SHALL BE DESIGNED AND FABRICATED IN ACCORDANCE WITH IBC CHAPTER 23TO SUPPORT SELF WEIGHT PLUS LIVE LOAD, SUPERIMPOSED DEAD LOADS, AND LATERALLOADS STATED IN THE GENERAL STRUCTURAL NOTES OR LOCATED ON PLANS. ROOF TRUSSESSHALL BE DESIGNED TO ACCOMMODATE A FUTURE MECHANICAL LOAD OF 300 POUNDS ATANY LOCATION. THE UNIFORM LOADS DO NOT INCLUDE SPECIAL OR ADDITIONAL LOADSNOTED ON THE PLANS OR DETAILS. THE ROOF LOAD DURATION FACTOR IS 1.25.

3. FOR ROOF TRUSSES, LIMIT TOTAL LOAD DEFLECTIONS TO SPAN/240 AT SIMPLE SPANS U.N.O. LIMIT LIVE LOAD DEFLECTIONS TO SPAN/360 AT SIMPLE SPANS U.N.O.

4. ADDITIONAL TRUSSES SHALL BE SUPPLIED AS REQUIRED TO SUPPORT MECHANICAL EQUIPMENT.

5. ALL CONNECTORS SHALL HAVE CURRENT ICC APPROVAL. ALL TRUSS TO TRUSS CONNECTORS SHALL BE DESIGNED BY THE TRUSS MANUFACTURER. MULTIPLE TRUSSMEMBERS SHALL BE FASTENED TOGETHER TO ALLOW TRANSFER OF SHEAR AND TENSIONFORCES (MINIMUM 200 PLF) AT PLYWOOD SHEATHING JOINTS AND TO PREVENT CROSSGRAIN BENDING OF TOP CHORDS. ATTACHMENT SHALL BE A CONTINUOUS 20 GAGE METALPLATE OR OTHER APPROVED MEANS. METHOD OF ATTACHMENT SHALL BE INDICATED ONSHOP DRAWINGS FOR REVIEW.

6. TRUSS MEMBER PERMANENT BRACING. WHERE PERMANENT BRACING OF TRUSS MEMBERSIS REQUIRED ON THE TRUSS DESIGN DRAWINGS, IT SHALL BE ACCOMPLISHED BY THE FOLLOWING METHOD: THE TRUSSES SHALL BE DESIGNED SO THAT THE BUCKLING OF ANY INDIVIDUAL TRUSS MEMBER CAN BE RESISTED INTERNALLY BY THE STRUCTURE (E.G. BUCKLING MEMBER T-BRACING, L-BRACING, ETC.) OF THE INDIVIDUAL TRUSS. THE TRUSS INDIVIDUAL MEMBER BUCKLING REINFORCEMENT SHALL BE INSTALLED AS SHOWN ON THE TRUSS DESIGN DRAWING OR ON SUPPLEMENTAL TRUSS MEMBER BUCKLING REINFORCEMENT DIAGRAMS PROVIDED BY THE TRUSS DESIGNER.

7. CONTRACTOR SHALL SUBMIT SHOP DRAWINGS, ERECTION DRAWINGS AND DESIGN CALCULATIONS SEALED BY A REGISTERED ENGINEER FOR REVIEW PRIOR TOMANUFACTURE. CALCULATIONS AND SHOP DRAWINGS SHALL SHOW ANY SPECIAL DETAILSREQUIRED AT BEARING POINTS.

8. ALL FABRICATION SHALL BE PERFORMED ON THE PREMISES OF A FABRICATORREGISTERED AND APPROVED TO PERFORM SUCH WORK WITHOUT SPECIAL INSPECTION.

SHOP DRAWINGS AND PRODUCT DATA SUBMITTALS:

1. SUBMIT SHOP DRAWINGS AND/OR PRODUCT DATA FOR ALL ITEMS DEFINED BY THE STRUCTURAL DRAWINGS AND SPECIFICATIONS, AS WELL AS STRUCTURAL ITEMS DEFINED BY THE ARCHITECTURAL DRAWINGS AND SPECIFICATIONS, PRIOR TO FABRICATION AND/OR CONSTRUCTION IN THE FIELD.

2. PROVIDE SUBMITTALS IN A TIMELY MANNER TO ALLOW FIVE WORKING DAYS FOR THE ENGINEER'S REVIEW. FOR HARD COPY SUBMITTALS, PROVIDE NO MORE THAN FOUR SETS FOR REVIEW (ONE COPY TO BE RETAINED BY THE ENGINEER). FOR ELECTRONIC SUBMITTALS, PROVIDE PDF FILES ONLY. ALL SUBMITTALS WITH A REQUESTED REVIEW TIME OF LESS THAN FIVE WORKING DAYS MAY BE RETURNED WITHOUT REVIEW AT THE ENGINEER'S DISCRETION.

3. CONSTRUCTION DOCUMENTS SHALL NOT BE REPRODUCED FOR USE AS SHOP DRAWINGS. THE MANUFACTURER OR FABRICATOR SHALL CLOUD ANY CHANGES, SUBSTITUTIONS, AND/OR DEVIATIONS FROM THE CONTRACT DOCUMENTS. ANY CHANGES, SUBSTITUTIONS, AND/OR DEVIATIONS THAT ARE NOT CLOUDED OR FLAGGED SHALL NOT BE CONSIDERED ALLOWED AFTER THE ENGINEER'S REVIEW, UNLESS NOTED ACCORDINGLY BY THE ENGINEER.

4. THE CONTRACTOR SHALL REVIEW ALL SHOP DRAWINGS PRIOR TO SUBMITTAL TO THE ENGINEER. CLEARLY INDICATE ITEMS NOT IN ACCORDANCE WITH THE CONTRACT DOCUMENTS. VERIFY DIMENSIONS WITH THE ARCHITECT.

5. THE ENGINEER'S REVIEW IS INTENDED ONLY AS AN AID TO THE CONTRACTOR IN OBTAINING CORRECT SHOP DRAWINGS. RESPONSIBILITY FOR CORRECTNESS AND COMPLETENESS SHALL REST WITH THE CONTRACTOR. SHOP DRAWINGS WILL BE RETURNED FOR RESUBMITTAL IF SIGNIFICANT ERRORS ARE FOUND DURING REVIEW

6. THE SHOP DRAWINGS DO NOT REPLACE THE CONTRACT DOCUMENTS. SHOP DRAWINGS PROCESSED BY THE ENGINEER SHALL NOT BE CONSIDERED CHANGE ORDERS. ITEMS THAT ARE OMITTED OR SHOWN INCORRECTLY AND THAT ARE NOT FLAGGED BY THE ENGINEER ARE NOT TO BE CONSIDERED CHANGES TO CONTRACT DOCUMENTS. IT IS THE CONTRACTOR'S RESPONSIBILITY TO CONSTRUCT ITEMS ACCORDING TO THE CONTRACT DOCUMENTS. SHOULD A DISCREPANCY EXIST BETWEEN THE PROCESSED SHOP DRAWINGS AND THE CONTRACT DOCUMENTS, THE CONTRACT DOCUMENTS SHALL GOVERN.

7. THE ENGINEER RESERVES THE RIGHT TO MAKE CHANGES TO THE CONTRACT DOCUMENTS, AT ANY TIME BEFORE OR AFTER SHOP DRAWING REVIEW.

8. THE ADEQUACY OF ENGINEERING DESIGNS AND LAYOUT PERFORMED BY OTHERS RESTS WITH THE DESIGNING OR SUBMITTING PARTY.

DEFERRED SUBMITTALS (PER 2018 IBC 107.3.4.1):

1. FOR THE PURPOSES OF THIS SECTION, DEFERRED SUBMITTALS ARE DEFINED AS THOSE PORTIONS OF THE DESIGN THAT ARE NOT SUBMITTED AT THE TIME OF THE APPLICATION AND WHICH ARE TO BE SUBMITTED TO THE BUILDING OFFICIAL WITHIN A SPECIFIED PERIOD.

2. DEFERRAL OF ANY SUBMITTAL ITEMS SHALL HAVE PRIOR APPROVAL OF THE BUILDING OFFICIAL. THE ARCHITECT OR ENGINEER OF RECORD SHALL LIST THE DEFERRED SUBMITTALS ON THE PLANS AND THE CONTRACTOR SHALL SUBMIT THE DEFERRED SUBMITTAL DOCUMENTS FOR REVIEW BY THE BUILDING OFFICIAL.

3. SUBMITTAL DOCUMENTS FOR DEFERRED SUBMITTAL ITEMS SHALL BE SUBMITTED TO THE ARCHITECT OR ENGINEER OF RECORD A MINIMUM OF 30 DAYS PRIOR TO FABRICATION. THE DOCUMENTS SHALL BE REVIEWED FOR GENERAL CONFORMANCE WITH THE DRAWINGS. A COPY OF THE DEFERRED SUBMITTAL DOCUMENTS SHALL BE SUBMITTED TO THE BUILDING OFFICIAL WITH A NOTATION INDICATING THAT THE DEFERRED SUBMITTAL DOCUMENTS HAVE BEEN REVIEWED. THE DEFERRED SUBMITTAL ITEMS SHALL NOT BE INSTALLED UNTIL THEIR DESIGN AND SUBMITTAL DOCUMENTS HAVE BEEN APPROVED BY THE BUILDING OFFICIAL.

DEFERRED SUBMITTAL ITEMS:

WOOD TRUSSES

SPECIAL INSPECTIONS AND TESTING:

1. THE OWNER (OR REGISTERED DESIGN PROFESSIONAL IN RESPONSIBLE CHARGE ACTINGAS THE OWNER'S AGENT) SHALL EMPLOY ONE OR MORE SPECIAL INSPECTORS TOPROVIDE INSPECTION AND TESTING DURING CONSTRUCTION OF THE TYPES OF WORKREQUIRING SPECIAL INSPECTION AS INDICATED ON THE DRAWINGS.

2. EACH SPECIAL INSPECTOR SHALL BE A QUALIFIED PERSON WHO SHALL DEMONSTRATECOMPETENCE, TO THE SATISFACTION OF THE BUILDING OFFICIAL AND STRUCTURALENGINEER OF RECORD, FOR INSPECTION OF THE PARTICULAR TYPE OF CONSTRUCTIONOR OPERATION REQUIRING SPECIAL INSPECTION.

3. THE CONTRACTOR SHALL CONVENE A MEETING WITH THE SPECIAL INSPECTION AGENCY(AGENCIES), THE BUILDING OFFICIAL, THE ARCHITECT, AND THE STRUCTURAL ENGINEEROF RECORD TO REVIEW INSPECTION REQUIREMENTS AND PROCEDURES, PRIOR TOCOMMENCING WITH CONSTRUCTION.

4. DUTIES AND RESPONSIBILITIES OF THE SPECIAL INSPECTOR:

   A. THE SPECIAL INSPECTOR SHALL OBSERVE THE WORK ASSIGNED FOR CONFORMANCE TO THE APPROVED CONSTRUCTION DOCUMENTS.B) THE SPECIAL INSPECTOR SHALL FURNISH INSPECTION REPORTS TO THE BUILDING OFFICIAL, AND TO THE ENGINEER OR ARCHITECT OF RECORD. REPORTS SHALL INDICATE THAT WORK INSPECTED WAS DONE IN CONFORMANCE TO APPROVED CONSTRUCTION DOCUMENTS. DISCREPANCIES SHALL BE BROUGHT TO THE IMMEDIATE ATTENTION OF THE CONTRACTOR FOR CORRECTION, THEN, IF UNCORRECTED, TO THE ENGINEER OR ARCHITECT OF RECORD AND THE BUILDING OFFICIAL. IT IS EXPECTED THAT REPORTS WILL BE SUBMITTED ON A WEEKLY BASIS AT A MINIMUM.C) UPON COMPLETION OF THE ASSIGNED WORK, THE SPECIAL INSPECTOR SHALL COMPLETE AND SIGN THE APPROPRIATE FORMS CERTIFYING THAT, TO THE BEST OF HIS KNOWLEDGE, THE WORK IS IN CONFORMANCE WITH THE APPROVED CONSTRUCTION DOCUMENTS, AND THE APPLICABLE WORKMANSHIP PROVISIONS OF THE CODE.

INTERPRETATION OF DRAWINGS

ABBREVIATIONS

A.B.C.	AGGREGATE BASE COURSE
A.F.F.	ABOVE FINISHED FLOOR
ALT	ALTERNATE
A.B.	ANCHOR BOLT
B.F.F.	BELOW FINISHED FLOOR
B.O.B.	BOTTOM OF BEAM
B.O.D.	BOTTOM OF DECK
B.O.F.	BOTTOM OF FOOTING
B.O.S.	BOTTOM OF STEEL
BOT	BOTTOM
BRG	BEARING
C.I.P.	CAST IN PLACE
C.F.S.	COLD FORMED STEEL
C.L.	CENTERLINE
CLR	CLEAR
CONC.	CONCRETE
CONC. C.J.	CONCRETE CONTROL JOINT
C.M.U.	CONCRETE MASONRY UNIT
CONN.	CONNECTION
CONT.	CONTINUOUS
D.L.	DEAD LOAD
DIA.	DIAMETER
DN	DOWN
DWG (S)	DRAWING(S)
(E)	EXISTING
E.F.	EACH FACE
E.O.S.	EDGE OF SLAB
EQ	EQUAL
EQUIP.	EQUIPMENT
EXP. BOLT	EXPANSION BOLT
E.J.	EXPANSION JOINT
E.W.	EACH WAY
FDN	FOUNDATION
F.F.E.	FINISHED FLOOR ELEVATION
GA	GAGE
GALV	GALVANIZED
G.S.N.	GENERAL STRUCTURAL NOTES
GLB (GLULAM)	GLUED-LAMINATED BEAM
HORIZ.	HORIZONTAL
I.B.C.	INTERNATIONAL BUILDING CODE
I.C.C.	INTERNATIONAL CODE COUNCIL
I.C.F.	INSULATED CONCRETE FORM
K (KIP)	1000 POUNDS
L.L.	LIVE LOAD
LBS	POUNDS
L.L.H.	LONG LEG HORIZONTAL
L.L.V.	LONG LEG VERTICAL
MFR ('S)	MANUFACTURER('S)
M.C.J.	MASONRY CONTROL JOINT
MECH.	MECHANICAL
(N)	NEW
N/A	NOT APPLICABLE
N.I.C.	NOT IN CONTRACT
N.F.S.	NON-FROST SUSCEPTIBLE
N.T.	NOT TO SCALE
O.C.	ON CENTER
OPP	OPPOSITE (MIRRORED)
P.A.F.	POWDER ACTUATED FASTENER
P.C.	PRECAST CONCRETE
PCF	POUNDS PER CUBIC FOOT
PLF	POUNDS PER LINEAR FOOT
PREFAB	PREFABRICATED
P.S.F.	POUNDS PER SQUARE FOOT
P.S.I.	POUNDS PER SQUARE INCH
REINF.	REINFORCING
SCH	SCHEDULE
SIM	SIMILAR
S.I.P.	STRUCTURAL INSULATED PANEL
S.L.R.S.	SEISMIC LOAD RESISTING SYSTEM
SP	SPACES
STD	STANDARD
T&B	TOP AND BOTTOM
T.L.	TOTAL LOAD
T.O.B.	TOP OF BEAM
T.O.C.	TOP OF CONCRETE
T.O.D.	TOP OF DECK
T.O.F.	TOP OF FOOTING
T.O.L.	TOP OF LEDGER
T.O.M.	TOP OF MASONRY
T.O.PL.	TOP OF PLATE
T.O.S.	TOP OF STEEL
T.O.W.	TOP OF WALL
TYP	TYPICAL
U.N.O.	UNLESS NOTED OTHERWISE.
VERT.	VERTICAL
W.S.P.	WOOD STRUCTURAL PANEL
W.W.F.	WELDED WIRE FABRIC
W/ (W/O)	WITH (WITHOUT)

PLAN LEGEND

SYMBOL	DESCRIPTION	REMARKS
101	DETAIL CUTS ON PLANS	FOUNDATION DETAILS ARE 100 SERIES NUMBERS. FRAMING DETAILS ARE 200 SERIES NUMBERS. BRACED FRAME DETAILS ARE 300 SERIES NUMBERS. STAIR FRAMING DETAILS ARE 400 SERIES NUMBERS.
#	KEYNOTE	
	8" MASONRY WALL U.N.O.	SEE PLANS AND SCHEDULES FOR SIZE AND REINFORCING
	12" MASONRY WALL U.N.O.	SEE PLANS AND SCHEDULES FOR SIZE AND REINFORCING
	CONCRETE WALL U.N.O.	SEE PLANS AND SCHEDULES FOR SIZE AND REINFORCING
	STEEL STUD WALL U.N.O.	SEE PLANS AND SCHEDULES FOR SIZE
	WOOD STUD WALL U.N.O.	SEE PLANS AND SCHEDULES FOR SIZE
SW	SHEAR WALL	SEE PLANS FOR LOCATION, SIZE AND TYPE
SW / SW	TWO-SIDED SHEAR WALL	SEE PLANS FOR LOCATION, SIZE AND TYPE
H	HOLDOWN ANCHOR	SEE PLANS AND SCHEDULES FOR SIZE AND LOCATIONS
M.C.J.	MASONRY CONTROL JOINT	SEE PLANS FOR LOCATION
P.J.	PANEL JOINT	SEE PLANS FOR LOCATION
C.J.	CONTROL JOINT	SEE PLANS FOR LOCATION
	DIRECTION OF SLOPE	VERIFY DEPTH WITH ARCHITECTURAL AND/OR MECHANICAL DRAWINGS
	SLAB DEPRESSION/ CHANGE IN ELEVATION	VERIFY DEPTH WITH ARCHITECTURAL DRAWINGS
B (F)	FLUSH BEAM	
B (D)	DROPPED BEAM	
	BRACED FRAME MEMBERS	SEE PLANS FOR LOCATION
	RIGID (MOMENT) CONNECTION	
	SIMPLE BEAM SPLICE CONNECTION	
(15") (15")	CIRCULAR OR RECTANGULAR OPENING IN BEAM WEB (SIZE)	SEE TYPICAL DETAIL U.N.O.
c=1/2"	BEAM CAMBER	
	NUMBER OF ROWS OF BOLTS AT BEAM TO COLUMN OR BEAM TO BEAM CONNECTION	SEE PLANS FOR LOCATION. IF NO SYMBOL INDICATED, SINGLE ROW OF BOLTS OCCURS
(-2 1/2")	TOP OF STEEL ELEVATION RELATIVE TO BOTTOM OF DECK ELEVATION	
(24)	QUANTITY OF HEADED STUDS ON COMPOSITE STEEL BEAM	SEE G.S.N. AND TYPICAL DETAILS FOR PLACEMENT
100'-0"	ELEVATION TARGET	
	REVISION SYMBOL	
	OPENING	
	MECHANICAL EQUIPMENT	VERIFY SIZE AND LOCATION WITH ARCHITECTURAL AND/OR MECHANICAL DRAWINGS
	POINT OF SUPPORT/SHORING	

SCHNEIDER
STRUCTURAL ENGINEERS
CREATING ELEGANT SOLUTIONS
435 East 9th Street | Tucson, AZ 85705 | 520.512.8183 | www.sastructural.com

Project Number: 121083

UNLESS THIS DRAWING IS SIGNED AND SEALED BY A LICENSED STRUCTURAL ENGINEER, IT IS A PRELIMINARY DESIGN AND SHALL NOT BE USED FOR CONSTRUCTION.

JSRa
JOHNSON SMITTHIPONG & ROSAMOND ASSOCIATES, INC.
5210 E Williams Cir • Ste 600 • Tucson, AZ 85711
(520) 547-7904 • www.jsrarchinc.com

Consultants:

This Electronic Signature has been authorized by the Registrant named below.
Registered Professional Engineer (Structural)
CERTIFICATE NO. 45716
DAVID N. GIBBENS
DATE SIGNED 11/03/22
ARIZONA, U.S.A.

WHITERIVER ADMINISTRATION OFFICE BUILDING

200 W HOSPITAL DR
WHITERIVER, AZ 85941

U. S. DEPARTMENT OF HEALTH AND HUMAN SERVICES
INDIAN HEALTH SERVICE
PHOENIX AREA OFFICE

No.	Date	Description

Issue Date:	11/3/2022
Project No:	21-020
Scale:	As Indicated
Drawn By:	SRK
Checked By:	DNG

FINAL CD

Sheet Title:

G.S.N. AND I.O.D.

Sheet Number:

S102

Autodesk Docs://21-020 Whiteriver Admin v2022/21-020 05 Site WR Admin 2022.rvt
11/1/2022 7:01:04 AM

TABLE 1: REQUIRED GEOTECHNICAL SPECIAL INSPECTIONS

890-IBC18

SYSTEM OR MATERIAL	INSPECTION				REMARKS
	IBC CODE REFERENCE	CODE OR STANDARD REFERENCE	FREQUENCY		
			CONTINUOUS	PERIODIC	
1. SOILS					
VERIFY MATERIALS BELOW SHALLOW FOUNDATIONS ARE ADEQUATE TO ACHIEVE THE DESIGN BEARING CAPACITY	1705.6	GEOTECHNICAL REPORT		x	BY THE GEOTECHNICAL ENGINEER
VERIFY ExCAVATIONS ARE ExTENDED TO PROPER DEPTH AND HAVE REACHED PROPER MATERIAL				x	
PERFORM CLASSIFICATION AND TESTING OF COMPACTED FILL MATERIAL				x	
VERIFY USE OF PROPER MATERIALS, DENSITIES AND LIFT THICKNESSES DURING PLACEMENT AND COMPACTION OF COMPACTED FILL			x		
PRIOR TO PLACEMENT OF COMPACTED FILL, INSPECT SUBGRADE AND VERIFY THAT SITE HAS BEEN PREPARED PROPERLY				x	

TABLE 2: REQUIRED STRUCTURAL SPECIAL INSPECTIONS

891.4A

SYSTEM OR MATERIAL	INSPECTION				REMARKS
	IBC CODE REFERENCE	CODE OR STANDARD REFERENCE	FREQUENCY		
			CONTINUOUS	PERIODIC	
1. FABRICATORS					
FABRICATED SYSTEMS AND ELEMENTS	1704.2			x	SPECIAL INSPECTIONS APPLY TO VERIFICATION OF DETAILED FABRICATION AND QUALITY CONTROL PROCEDURES, INCLUDING REVIEW FOR COMPLETENESS AND ADEQUACY RELATIVE TO THE CODE REQUIREMENTS. SPECIAL INSPECTIONS ARE NOT REQUIRED FOR WORK DONE ON THE PREMISES OF A FABRICATOR REGISTERED AND APPROVED TO PERFORM SUCH WORK WITHOUT SPECIAL INSPECTION. APPROVED FABRICATORS, UPON COMPLETION OF COMPONENT MANUFACTURING, SHALL SUBMIT A CERTIFICATE OF COMPLIANCE TO THE BUILDING OFFICIAL STATING THAT THE WORK WAS PERFORMED IN ACCORDANCE WITH THE APPROVED CONSTRUCTION DOCUMENTS.
2. CONCRETE					
NO CONCRETE SPECIAL INSPECTIONS ARE REQUIRED. CONCRETE TESTING IS REQUIRED, REFERENCE REQUIRED TESTING TABLE 3.					
3. POST-INSTALLED ANCHORS					
INSTALLATION IN HARDENED CONCRETE AND COMPLETED MASONRY	1703.4.2 1704.13.3	ICC EVALUATION REPORT	x		SPECIAL INSPECTIONS APPLY TO ANCHOR PRODUCT NAME, TYPE, AND DIMENSIONS, HOLE DIMENSIONS, COMPLIANCE WITH DRILL BIT REQUIREMENTS, CLEANLINESS OF THE HOLE AND ANCHOR, ADHESIVE ExPIRATION DATE, ANCHOR/ADHESIVE INSTALLATION, ANCHOR EMBEDMENT, AND TIGHTENING TORQUE

TABLE 3: REQUIRED TESTING FOR SPECIAL INSPECTIONS

894-IBC18

SYSTEM OR MATERIAL	INSPECTION				REMARKS
	IBC CODE REFERENCE	CODE OR STANDARD REFERENCE	FREQUENCY		
			CONTINUOUS	PERIODIC	
1. GEOTECHNICAL					
FILL IN-PLACE DENSITY OR PREPARED SUBGRADE DENSITY	1705.6	VARIES; MINIMUM PER IBC APPENDIx J107.5		x	BY THE GEOTECHNICAL ENGINEER
MATERIAL VERIFICATION		VARIES; CLASSIFICATION AND TESTING OF CONTROLLED FILL MATERIALS		x	BY THE GEOTECHNICAL ENGINEER
2. CONCRETE					
CONCRETE STRENGTH	1704.4 1905.6	ASTM C39	EACH 150 CY NOT LESS THAN ONE TEST EACH 5000 SF OF SLAB OR WALL PLACED EACH DAY		FABRICATE SPECIMENS AT TIME FRESH CONCRETE IS PLACED
CONCRETE SLUMP		ASTM C143			
CONCRETE AIR CONTENT		ASTM C231			
CONCRETE TEMPERATURE		ASTM C1064			

SCHNEIDER
STRUCTURAL ENGINEERS
CREATING ELEGANT SOLUTIONS

435 East 9th Street | Tucson, AZ 85705 | 520.512.8183 | www.sastructural.com

Project Number: 121083

UNLESS THIS DRAWING IS SIGNED AND SEALED BY A LICENSED STRUCTURAL ENGINEER, IT IS A PRELIMINARY DESIGN AND SHALL NOT BE USED FOR CONSTRUCTION.

JSRa
JOHNSON SMITTHIPONG & ROSAMOND ASSOCIATES, INC.
5210 E Williams Cir • Ste 600 • Tucson, AZ 85711
(520) 547-7904 • www.jsrarchinc.com

Consultants:

This Electronic Signature has been authorized by the Registrant Registered Professional Engineer (Structural) CERTIFICATE NO. 45716 DAVID N. GIBBENS DATE SIGNED 11/01/22 ARIZONA, U.S.A.

WHITERIVER ADMINISTRATION OFFICE BUILDING

200 W HOSPITAL DR
WHITERIVER, AZ 85941

U. S. DEPARTMENT OF HEALTH AND HUMAN SERVICES
INDIAN HEALTH SERVICE
PHOENIX AREA OFFICE

No.	Date	Description

Issue Date:	11/3/2022
Project No:	21-020
Scale:	As Indicated
Drawn By:	SRK
Checked By:	DNG

FINAL CD

Sheet Title:

SPECIAL INSPECTIONS CHART

Sheet Number:

S103

Autodesk Docs://21-020 Whiteriver Admin v2022/21-020 05 Strc WR Admin 2022.rvt
11/1/2022 7:01:04 AM

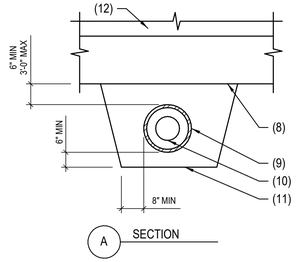

NOTES:
A. NO PIPE SHALL PASS THRU FOOTINGS OR UNDER COLUMN FOOTINGS.
B. FOR TRENCHES GREATER THAN 3'-6" BELOW BOTTOM OF FOOTING, SEE PIPE PASSING BELOW WALL FOOTING DETAIL.

NOTES:
1. C.I. SLEEVE 2" LARGER THAN PIPE.
2. NO SLEEVES PERMITTED.
3. EXCAVATION BELOW THESE LINES NOT PERMITTED.
4. CONCRETE FILL PIPE TRENCH - EXTEND 2'-0" EACH SIDE OF SLEEVE.
5. 3'-0" MAXIMUM - STEP FOOTING IF NECESSARY IN ORDER TO MAINTAIN 3'-0" MAX HEIGHT.
6. BACK FILL PER SPECS.
7. 90% DENSITY - (ASTM D-698).
8. CONCRETE FOOTING.
9. SLEEVE - PROVIDE 1/2" MINIMUM CLEARANCE AROUND PIPE OR CONDUIT.
10. PIPE OR CONDUIT.
11. CONCRETE FILL TO BE PLACED BEFORE FOOTING IS POURED - FORM SAME AS FOOTING AND POUR FULL WIDTH OF PIPE TRENCH.
12. STEM WALL.

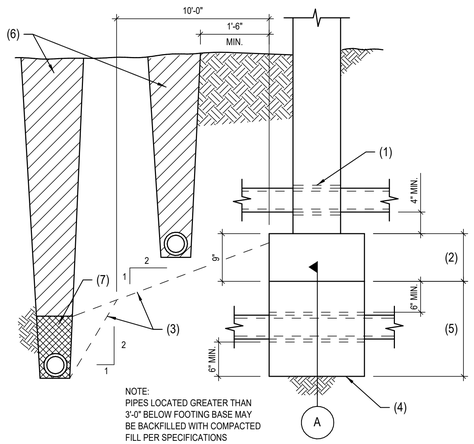

NOTE:
PIPES LOCATED GREATER THAN 3'-0" BELOW FOOTING BASE MAY BE BACKFILLED WITH COMPACTED FILL PER SPECIFICATIONS

10 PIPE THROUGH FOOTING AND TRENCH
SCALE: NOT TO SCALE — 200-005-TYP

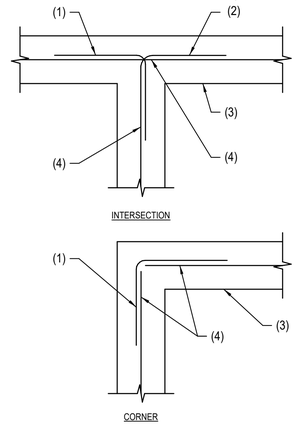

NOTES:
1. CORNER BARS SAME SIZE AND SPACING AS HORIZONTAL REINFORCING. LAP PER G.S.N. (24" MINIMUM).
2. ALTERNATE BEND.
3. CONCRETE STEM WALL OR FOOTING.
4. REINFORCING PER PLANS AND /OR G.S.N.

07 PLAN - CORNER REINFORCING IN CONCRETE FOOTING AND/OR STEM WALL
SCALE: NOT TO SCALE — 200-030-TYP

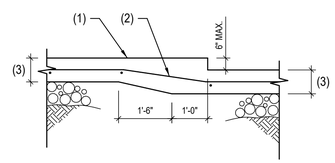

NOTES:
1. SLAB, SEE PLAN FOR REINFORCEMENT.
2. SLAB REINFORCING TO CONTINUE THROUGH DEPRESSION.
3. SLAB THICKNESS, SEE PLAN.

08 TYPICAL SLAB DEPRESSION
SCALE: NOT TO SCALE — 202-010-TYP

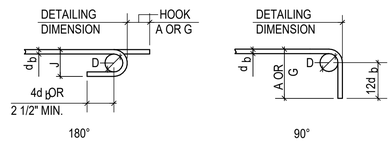

END HOOKS,ALL GRADES				
BAR SIZE	FINISHED BEND DIA. D,IN.	18O-DEG HOOKS		9O DEG HOOKS
		A OR G, IN.	J, IN.	A OR G,IN.
#3	2.25	5	3	6
#4	3	6	4	8
#5	3.75	7	5	1O
#6	4.5	8	6	12
#7	5.25	1O	7	14
#8	6	11	8	16
#9	9.5	15	11.75	19
#1O	1O.75	17	13.25	22
#11	12	19	14.75	24
#14	18.25	27	21.75	31
#18	24	36	28.5	41

03 TYPICAL REINFORCING HOOK SCHEDULE
SCALE: NOT TO SCALE — 200-045-TYP

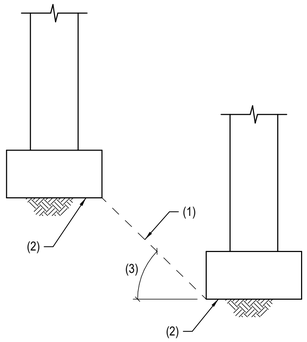

NOTES:
1. DO NOT LOCATE ADJACENT FOOTING BELOW IMAGINARY LINE EXTENDING FROM BOTTOM OF FOOTING.
2. BOTTOM OF CONCRETE FOOTING.
3. 30" MAX IN GRANULAR SOILS, 45° MAX IN OTHER SOILS U.N.O.

NOTE:
FOR ADDITIONAL INFORMATION, SEE PLANS AND DETAILS.

04 MAXIMUM SLOPE BETWEEN ADJACENT FOOTING
SCALE: NOT TO SCALE — 200-004-TYP

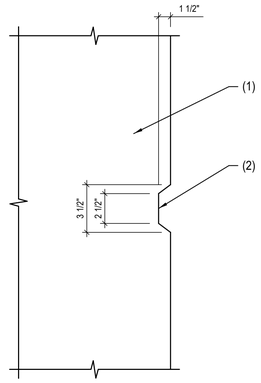

NOTES:
1. CONCRETE.
2. KEYED JOINT - REMOVE FORM MATERIAL PRIOR TO PLACING ADJACENT CONCRETE.

NOTE:
ALL DIMENSIONS ARE ±1/2".

01 TYPICAL KEY IN CONCRETE
SCALE: NOT TO SCALE — 200-023-TYP

ANCHOR DIAMETER	MECHANICAL ANCHOR EMBEDMENT LENGTH IN CONCRETE	MECHANICAL ANCHOR EMBEDMENT LENGTH IN MASONRY	THREADED ROD ANCHOR EMBEDMENT LENGTH IN CONCRETE	THREADED ROD ANCHOR EMBEDMENT LENGTH IN MASONRY
3/8"	3"	2 3/4"	4 1/2"	3 1/2"
1/2"	4"	3 1/2"	5"	4 1/2"
5/8"	5 1/4"	4 1/2"	6 3/4"	6"
3/4"	5 3/4"	5 1/2"	6 3/4"	7"
7/8"	---	---	7"	---
1"	8"	8"	8"	---
1 1/4"	---	---	10"	---

REINFORCING STEEL SIZE	REINFORCING STEEL EMBEDMENT LENGTH IN CONCRETE	REINFORCING STEEL EMBEDMENT LENGTH IN MASONRY
#3	3"	6"
#4	6"	8"
#5	6"	8"
#6	8"	8"
#7	8"	8"
#8	10"	8"
#9	12"	12"

NOTES:
1. PROVIDE POST-INSTALLED ANCHORS AND REINFORCING STEEL PER THIS SCHEDULE UNLESS NOTED ON PLANS OR DETAILS.
2. POST-INSTALLED ANCHORS SHALL HAVE I.C.C. APPROVAL.
3. THICKNESS OF DRYPACK DOES NOT APPLY TOWARDS EMBEDMENT.
4. MECHANICAL ANCHORS INCLUDE BUT ARE NOT LIMITED TO WEDGE, UNDERCUT AND SCREW TYPE ANCHORS.

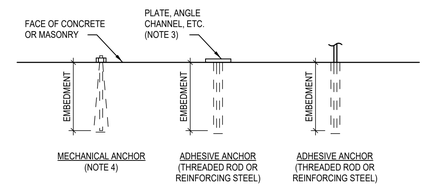

02 TYPICAL POST-INSTALLED ANCHOR AND REINFORCING STEEL SCHEDULE
SCALE: NOT TO SCALE — 501-002-TYP

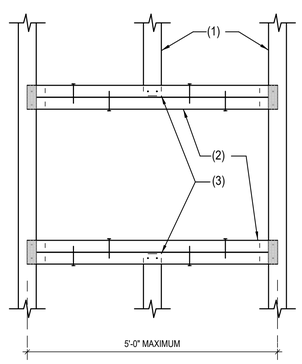

NOTES:
1. WOOD I-JOIST OR PREFABRICATED WOOD TRUSS. NOTE: MANUFACTURER SHALL VERIFY CAPACITY FOR MECHANICAL LOADS - MODIFY AS REQUIRED (MAINTAIN DEPTH).
2. DOUBLE 2x8 WITH USP HUS28-2TF HANGERS EACH END AND 16d NAILS AT 12" O.C.
3. TOP PLANGE HANGERS AS REQUIRED PER WOOD I-JOIST OR PREFABRICATED WOOD TRUSS MANUFACTURER.

11 TYPICAL ROOF OPENING
SCALE: NOT TO SCALE — 601-065-TYP

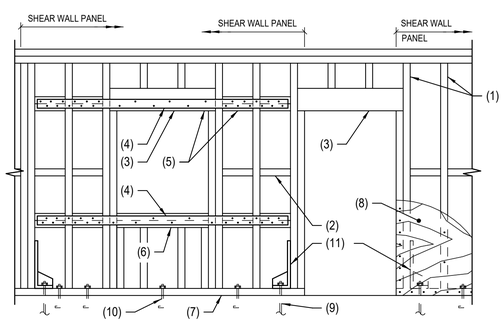

SEE G.S.N., SHEAR WALL SCHEDULE, AND TYPICAL WOOD STUD WALL EXTERIOR/BEARING DETAIL FOR MORE INFORMATION

NOTES:
1. 2x WOOD STUDS AT 16" O.C. MAXIMUM.
2. SOLID BLOCKING AT SHEATHING PANEL JOINTS.
3. WOOD LINTEL.
4. TYPICAL AS NOTED IN SHEAR WALL SCHEDULE: CONTINUOUS STEEL STRAP NAILED INTO BLOCKING BETWEEN STUDS. LOCATE STRAP NAILS 1 5/8" MIN FROM BLOCKING PIECE ENDS.
5. ALIGN BOTTOM EDGE OF BLOCKING WITH BOTTOM EDGE OF LINTEL.
6. DOUBLE 2x WOOD SILL WHERE STRAP OCCURS.
7. SILL PLATE.
8. SHEAR WALL SHEATHING.
9. HOLDOWN ANCHOR.
10. ANCHOR BOLTS AT FOUNDATIONS IN SILL PLATE AT WOOD FRAMING BELOW.
11. HOLDOWN PER STRAPPED SHEAR WALL (SSW) SCHEDULE AT ENDS OF EACH SHEAR WALL PANEL. A SHEAR WALL PANEL EXTENDS THROUGH AN OPENING(S) AND ITS ENDS ARE REPRESENTED BY THE TERMINATION OF THE SHEAR WALL LINEWORK ON PLAN.

09 TYPICAL STRAPPED WOOD STUD SHEAR WALL TYPE III
SCALE: NOT TO SCALE — 602-002-TYP

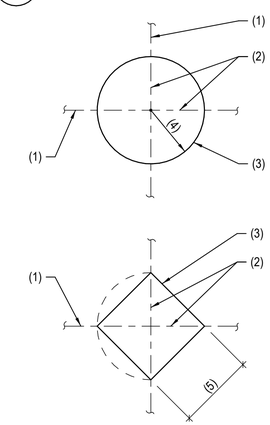

NOTES:
1. CONCRETE CONTROL JOINT WHERE SHOWN ON PLAN.
2. CENTERLINE OF COLUMN.
3. KEYED JOINT - SEE TYPICAL THICKENED SLAB AT CONCRETE CLOSURE POUR DETAIL.
4. RADIUS 1'-6" MINIMUM; 3'-0" MAXIMUM.
5. 2'-0" MINIMUM; 4'-0" MAXIMUM.

NOTE:
FOR CLARITY, COLUMNS OMITTED. FOR CONFIGURATION OF SPECIFIC CLOSURE POURS, SEE PLAN.

05 TYPICAL COLUMN CLOSURE POUR AT CONCRETE SLAB ON GRADE
SCALE: NOT TO SCALE — 200-021-TYP

SCHNEIDER
STRUCTURAL ENGINEERS
CREATING ELEGANT SOLUTIONS
435 East 9th Street | Tucson, AZ 85705 | 520.512.8183 | www.sastructural.com
Project Number: 121083

UNLESS THIS DRAWING IS SIGNED AND SEALED BY A LICENSED STRUCTURAL ENGINEER, IT IS A PRELIMINARY DESIGN AND SHALL NOT BE USED FOR CONSTRUCTION.

JSRa
JOHNSON SMITTHIPONG & ROSAMOND ASSOCIATES, INC.
5210 E Williams Cir • Ste 600 • Tucson, AZ 85711
(520) 547-7904 • www.jsrarchinc.com

Consultants:

Registered Professional Engineer (Structural) CERTIFICATE NO. 45716 DAVID N. GIBBENS DATE SIGNED 11/01/22 ARIZONA, U.S.A.
This Electronic Signature has been Authorized by the Registrant named above.

WHITERIVER ADMINISTRATION OFFICE BUILDING

200 W HOSPITAL DR
WHITERIVER, AZ 85941

U. S. DEPARTMENT OF HEALTH AND HUMAN SERVICES
INDIAN HEALTH SERVICE
PHOENIX AREA OFFICE

No.	Date	Description

Issue Date:	11/3/2022
Project No:	21-020
Scale:	As Indicated
Drawn By:	SRK
Checked By:	DNG

FINAL CD

Sheet Title:

TYPICAL DETAILS

Sheet Number:

S104

Autodesk Docs://21-020 Whiteriver Admin v2022/21-020 05 Strc WR Admin 2022.rvt
11/1/2022 7:01:04 AM

NOTES:

1. TOP CHORDS OF TRUSS JOISTS.
2. 2x4 WITH USP FC24-TZ HANGER EACH END.
3. FOR OPENING DIMENSION, SEE MECHANICAL AND ARCHITECTURAL DRAWINGS.
4. (2) 2x4 WITH USP PHG24-Z4 HANGER EACH END.

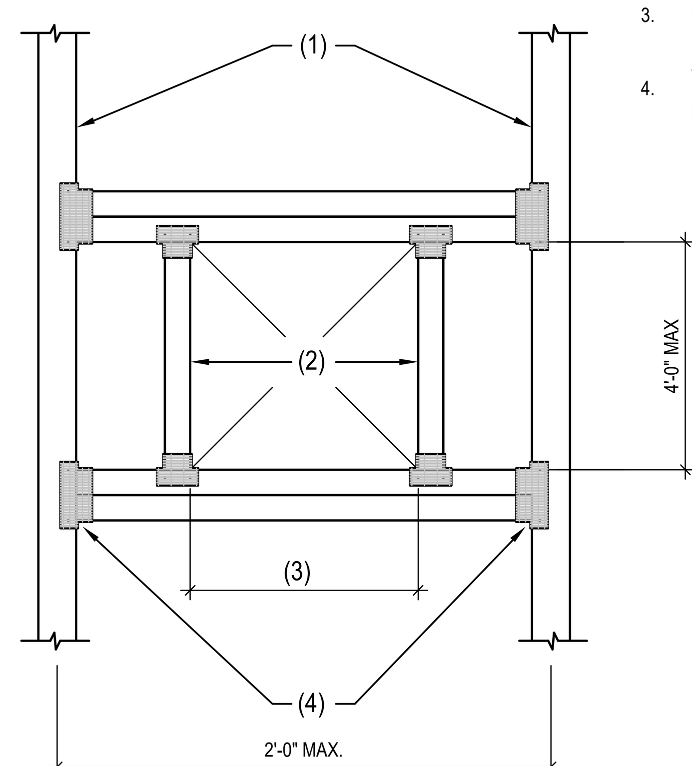

19 PLAN VIEW - TYPICAL FRAMING AROUND SMALL OPENING

SCALE: NOT TO SCALE 112015-S1.4-17

ANCHOR DIAMETER	VERT BOLT EMBEDMENT LENGTH	HORIZ BOLT EMBEDMENT LENGTH	HEADED STUD FILLET WELD SIZE, "S"
1/2"	7"	4"	1/4"
5/8"	7"	4"	5/16"
3/4"	7"	5"	5/16"
7/8"	8"	6"	5/16"
1"	9"	7"	3/8"
1 1/8"	10"	8"	---
1 1/4"	11"	9"	---

NOTES:

1. PROVIDE ANCHORS, ANCHOR BOLTS, AND HEADED STUDS PER THIS SCHEDULE UNLESS NOTED ON PLANS OR DETAILS.
2. SCHEDULE APPLIES TO ANCHORS IN CONCRETE AND MASONRY.
3. THICKNESS OF DRYPACK DOES NOT APPLY TOWARDS EMBEDMENT.

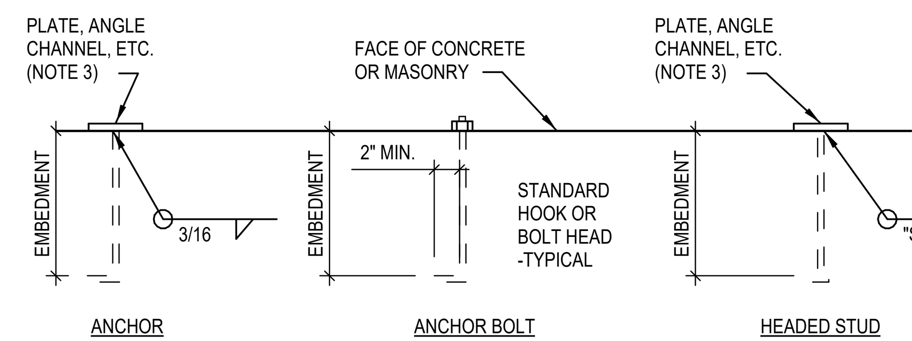

16 TYPICAL CAST-IN-PLACE ANCHOR, ANCHOR BOLT, AND HEADED STUD SCHEDULE

SCALE: NOT TO SCALE 501-001-TYP

NOTES:

1. CENTER BORED HOLES IN ALL STUDS TO GREATEST EXTENT POSSIBLE. IN NO CASE SHALL THE EDGE OF THE BORED HOLE BE NEARER THAN 5/8" TO EDGE OF STUD.
2. MINIMUM SPACING BETWEEN ANY NOTCHES OR BORINGS SHALL BE 18".
3. NO NOTCHES PERMITTED IN THE MIDDLE THIRD OF SPAN.
4. NOTCHES NOT PERMITTED WHEN "b" IS LESS THAN 3 1/2"
5. MIDDLE THIRD OF SPAN.

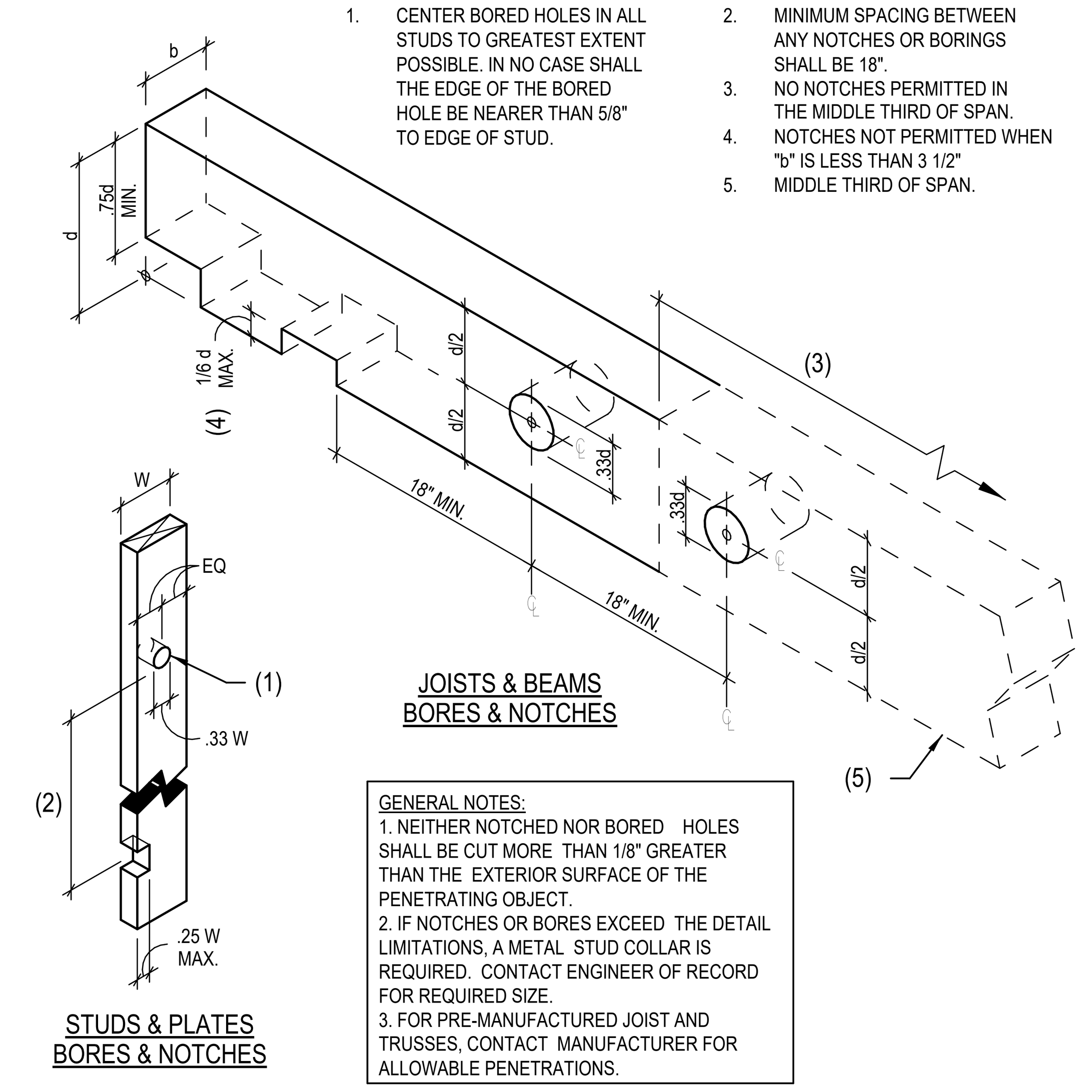

GENERAL NOTES:
1. NEITHER NOTCHED NOR BORED HOLES SHALL BE CUT MORE THAN 1/8" GREATER THAN THE EXTERIOR SURFACE OF THE PENETRATING OBJECT.
2. IF NOTCHES OR BORES EXCEED THE DETAIL LIMITATIONS, A METAL STUD COLLAR IS REQUIRED. CONTACT ENGINEER OF RECORD FOR REQUIRED SIZE.
3. FOR PRE-MANUFACTURED JOIST AND TRUSSES, CONTACT MANUFACTURER FOR ALLOWABLE PENETRATIONS.

14 TYPICAL BORED HOLES AND NOTCHES IN WOOD FRAMING

SCALE: NOT TO SCALE 112015-S1.3-14

	TENSION SPLICE LENGTHS (CLASS B)												COMP. BARS	
CONCRETE PSI	f'c=2,500/3,000 PSI				f'c = 4,000 PSI				f'c = 5,000 PSI				f'c = ALL	
BAR LOCATION	REGULAR		TOP		REGULAR		TOP		REGULAR		TOP		STD LAP	ENCLOSED W/ SPIRAL TIES
SIZE \ SPACING	>2db	OTHER	>2db	OTHER	>2db	OTHER	>2db	OTHER	>2db	OTHER	>2db	OTHER		
#3	24"	36"	31"	46"	19"	28"	25"	37"	17"	25"	22"	33"	12"	12"
#4	32"	47"	41"	61"	25"	37"	33"	49"	23"	34"	29"	44"	15"	12"
#5	39"	59"	51"	77"	31"	47"	41"	61"	28"	42"	36"	54"	19"	15"
#6	47"	71"	61"	92"	37"	56"	49"	73"	34"	50"	44"	65"	23"	18"
#7	69"	103"	89"	134"	54"	81"	71"	106"	49"	73"	63"	95"	27"	21"
#8	78"	117"	102"	153"	62"	93"	81"	121"	56"	83"	72"	108"	30"	23"
#9	88"	132"	115"	172"	70"	105"	91"	136"	63"	94"	81"	122"	34"	26"
#10	100"	149"	129"	194"	79"	118"	102"	153"	71"	106"	92"	137"	39"	30"
#11	110"	165"	143"	215"	87"	131"	114"	170"	78"	117"	102"	152"	43"	33"

NOTES:
1. TOP BARS ARE ANY HORIZONTAL BARS PLACED SO THAT MORE THAN 12" OF FRESH CONCRETE IS CAST IN THE MEMBER BELOW THE REINFORCEMENT.
2. CONCRETE COVERAGE AROUND REINFORCING SHALL NOT BE LESS THAN THE DIAMETER OF THE BAR.

12 MINIMUM REINFORCING BAR SPLICE LENGTHS IN CONCRETE

SCALE: NOT TO SCALE 200-040-TYP

NOTES:

1. 2x WOOD STUDS AT 16" O.C. MAX.
2. SOLID BLOCKING AT SHEATHING PANEL JOINTS.
3. WOOD LINTEL.
4. HOLDOWN PER SHEAR WALL SCHEDULE AT ENDS OF EACH SHEARWALL SEGMENT. ATTACH TO FULL HEIGHT JAMB STUDS.
5. ANCHOR BOLTS IN SILL PLATE AT FOUNDATIONS/NAILS IN SILL PLATE AT WOOD FRAMING BELOW.
6. HOLDOWN ANCHOR.
7. SILL PLATE.
8. SHEAR WALL SHEATHING.

SEE G.S.N., SHEAR WALL SCHEDULE AND TYPICAL WOOD STUD WALL EXTERIOR/BEARING DETAIL FOR MORE INFORMATION

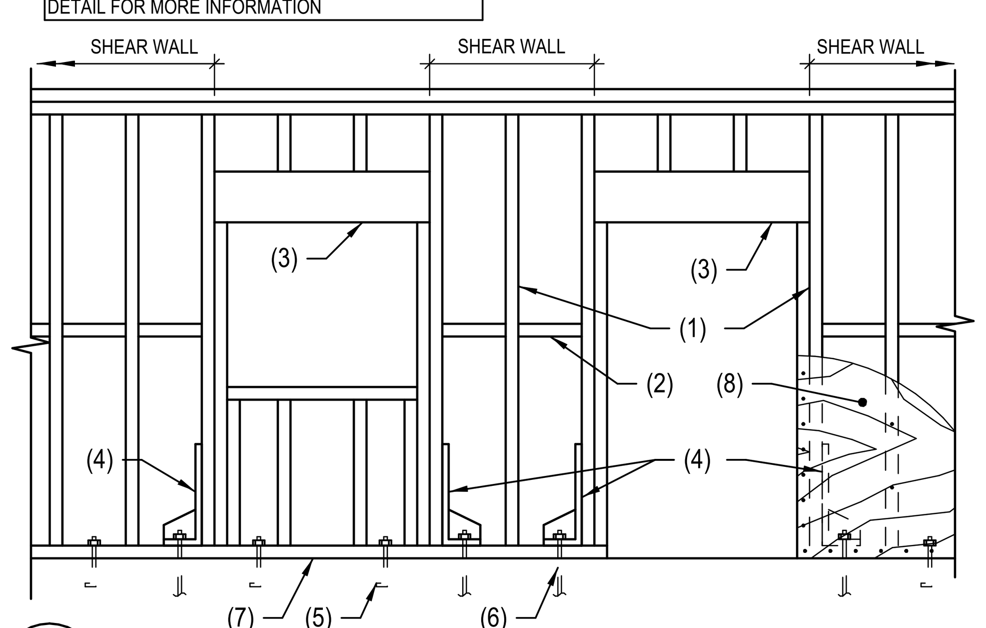

20 TYPICAL WOOD STUD SHEAR WALL - TYPE I

SCALE: NOT TO SCALE 602-001-TYP

NOTES:

1. WOOD STUD WALL.
2. SHEARWALL SHEATHING AS OCCURS.
3. 2x4 STUDS.
4. 16d NAILS AT 12" O.C.
5. SHEARWALL EDGE NAILING.

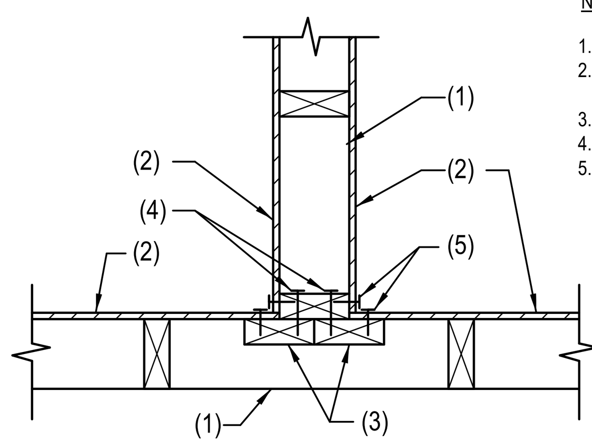

17 SHEARWALL AT INTERSECTING SHEARWALL

SCALE: NOT TO SCALE 602-035

CONNECTION | FASTENING | LOCATION

CONNECTION	FASTENING	LOCATION
JOIST TO SILL OR GIRDER	(3) 8d COMMON (2 1/2"x0.131") (3) 3"x0.131" NAILS	TOENAIL
BRIDGING TO JOIST	(2) 8d COMMON (2 1/2"x0.131") (2) 3"x0.131" NAILS	TOENAIL EACH END
SOLE PLATE TO JOIST OR BLOCKING	16d (3 1/2"x0.135") AT 16" O.C. 3"x0.131" NAILS AT 8" O.C.	TYPICAL FACE NAIL
TOP PLATE TO STUD	(2) 16d COMMON (3 1/2"x0.162") 3-3"x0.131" NAILS	END NAIL
STUD TO SOLE PLATE	(4) 8d COMMON (2 1/2"x0.131") (4) 3"x0.131" NAILS	TOENAIL
	(2) 16d COMMON (3 1/2"x0.162") (3) 3"x0.131" NAILS	END NAIL
BUILT-UP STUDS	16d (3 1/2"x0.135") AT 12" O.C. 3"x0.131" NAILS AT 8" O.C.	FACE NAIL
DOUBLE TOP PLATES	16d (3 1/2"x0.135") AT 16" O.C. 3"x0.131" NAILS AT 12" O.C.	TYPICAL FACE NAIL
	(8) 16d COMMON (3 1/2"x0.162") (12) 3"xO.131" NAILS	LAP SPLICE
	(2) 20d NAILS AT 3x STUDS	END NAIL
BLOCKING BETWEEN JOISTS OR RAFTERS TO TOP PLATE	(3) 8d COMMON (2 1/2"x0.131") (3) 3"x0.131" NAILS	TOENAIL
RIM JOIST TO TOP PLATE	8d (2 1/2"x0.131") AT 6" O.C. 3"x0.131" NAIL AT 6" O.C.	TOENAIL
TOP PLATES, LAPS AND INTERSECTIONS	(2) 16d COMMON (3 1/2"x0.162") (3) 3"x0.131" NAILS	FACE NAIL
CONT. HEADER, TWO PIECES	16d COMMON (3 1/2"x0.162")	16" O.C. ALONG EDGE
CONT. HEADER TO STUD	(4) 8d COMMON (2 1/2"x0.131")	TOENAIL
WOOD JOIST TO PLATE	(3) 8d COMMON (2 1/2"x0.131") (3) 3"x0.131" NAILS	TOENAIL
BUILT-UP CORNER STUDS	16d COMMON (3 1/2"x0.162") 3"x0.131" NAILS	24" O.C. 16" O.C.
BUILT-UP GIRDER AND BEAMS	20d COMMON (4"x0.192") 32" O.C. 3"x0.131" NAIL AT 24" O.C.	FACE NAIL AT TOP AND BOTTOM STAGGERED ON OPPOSITE SIDES
	(2) 20d COMMON (4"x0.192") (3) 3"x0.131" NAILS	FACE NAIL AT ENDS AND AT EACH SPLICE

NOTES:
1. COMMON OR BOX NAILS ARE PERMITTED TO BE USED EXCEPT WHERE OTHERWISE STATED.
2. STAPLES SHALL HAVE A MINIMUM CROWN OF 7/16".
3. FASTENING SCHEDULE APPLIES U.N.O., WHERE DIFFERENCES OCCUR, GREATER REQUIREMENT GOVERNS.

13 TYPICAL WOOD FASTENING

SCALE: NOT TO SCALE 601-008-TYP

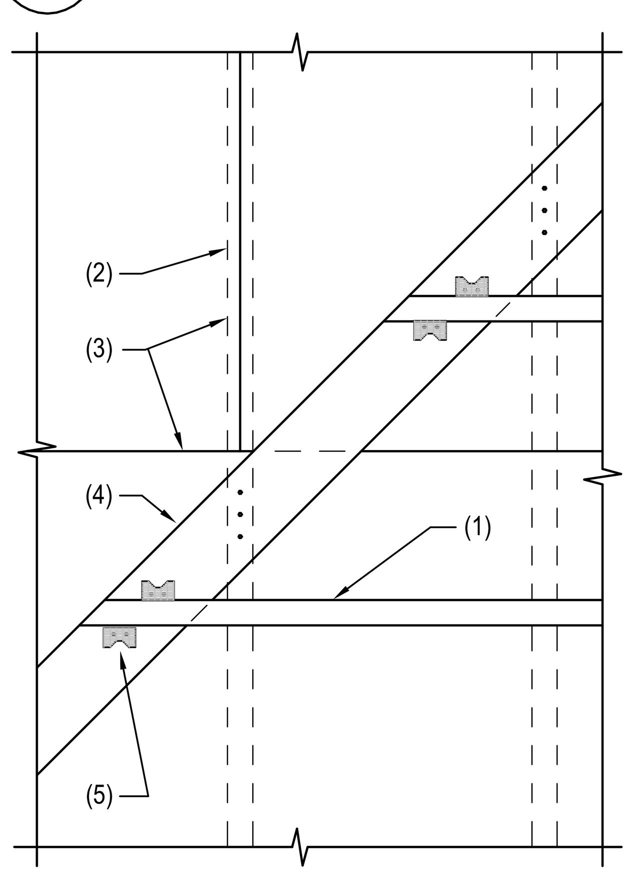

NOTES:

1. 2x OR VALLEY SET FRAMING.
2. PREFAB WOOD TRUSS BELOW.
3. LINE OF PLYWOOD SHEATHING JOINTS.
4. 2x8 LAID FLAT OVER PLYWOOD SHEATHING WITH (3) 16d TYPICAL AT EACH TRUSS.
5. USP MP34 EACH SIDE - TYPICAL.

NOTE:
1. PLYWOOD SHEATHING OVER PRIMARY ROOF TRUSSES SHALL BE CONTINUOUS.
2. FOR CLARITY, SHEATHING OVER VALLEY FRAMING NOT SHOWN.

21 PLAN - TYPICAL VALLEY FRAMING AT PREFAB. WOOD TRUSSES

SCALE: NOT TO SCALE 121126-S1.4-22

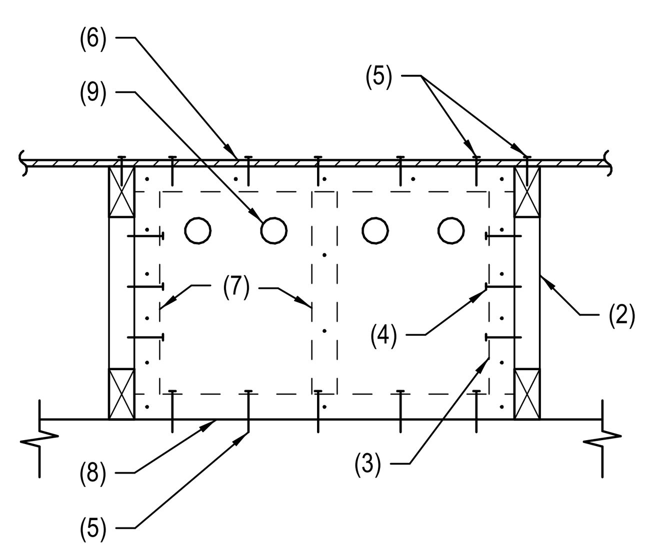

NOTES:

1. EDGE ATTACHMENT U.N.O.
2. PREFABRICATED WOOD TRUSS. NOTE: TRUSS MANUFACTURER SHALL PROVIDE VERTICAL WEB TO MATCH LOCATION OF SHEAR PANEL.
3. 3/8" PLYWOOD SHEAR PANEL WITH 8d NAILS AT 6" O.C. AT PANEL EDGES AND 8d NAILS AT 12" O.C. AT INTERMEDIATE SUPPORTS.
4. 16d NAILS AT 6" O.C. TO TRUSS VERTICAL WEB.
5. 16d NAILS TO MATCH "EDGE ATTACHMENT U.N.O." SPACING.
6. SHEATHING.
7. 2x4 AT FOUR SIDES AND INTERMEDIATE.
8. TOP OF WOOD PLATE OR BEAM AS OCCURS.
9. 2" DIA. VENTILATION HOLES AT 6" O.C. AS REQUIRED.

NOTE:
FOR CONSTRUCTION BELOW PANEL, SEE PLAN.

18 TYPICAL PLYWOOD SHEAR PANEL

SCALE: NOT TO SCALE 601-100-TYP

NOTES:

1. WOOD STUDS AT WALL ENDS, INTERSECTING WALLS, JAMBS OF OPENINGS, AND AT 16" O.C.
2. 2x BLOCKING AT MID-HEIGHT OR AT 5'-0" O.C. MAX.
3. WOOD LINTEL.
4. TRIMMER AND JAMB STUDS PER SCHEDULES.
5. TRIMMER STUD.
6. SILL PLATE ANCHORAGE STRAPS IN TREATED WOOD SILL PLATES AT FOUNDATIONS. NAILS IN SILL PLATE AT WOOD FRAMING BELOW.
7. CONTINUOUS DOUBLE TOP PLATE. SPLICE WITH (12) 16d NAILS EACH SIDE OF SPLICE U.N.O.
8. 2x WOOD SILL. DOUBLE 2x SILL AT OPENINGS GREATER THAN 8'-0".
9. USP MP34 - TYPICAL AS SHOWN. AT OPENINGS > 5'-0" WIDE.
10. FRAMING CLIP AS REQUIRED.
11. DOUBLE SILL PLATE WHERE GYPCRETE FLOOR TOPPING OCCURS.

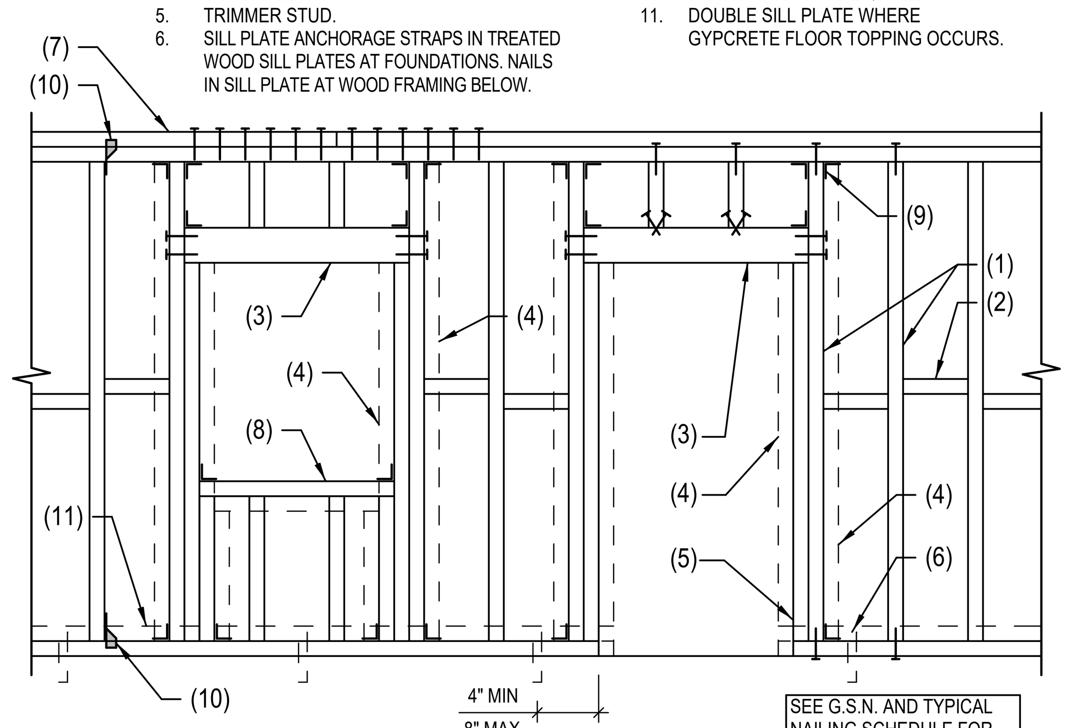

SEE G.S.N. AND TYPICAL NAILING SCHEDULE FOR MORE INFORMATION

15 TYPICAL WOOD STUD EXTERIOR/BEARING WALL

SCALE: NOT TO SCALE 112015-S1.3-15

SCHNEIDER STRUCTURAL ENGINEERS

CREATING ELEGANT SOLUTIONS

435 East 9th Street | Tucson, AZ 85705 | 520.512.8183 | www.sastructural.com

Project Number: 121083

UNLESS THIS DRAWING IS SIGNED AND SEALED BY A LICENSED STRUCTURAL ENGINEER, IT IS A PRELIMINARY DESIGN AND SHALL NOT BE USED FOR CONSTRUCTION.

JSRa
JOHNSON SMITTHIPONG & ROSAMOND ASSOCIATES, INC.
5210 E Williams Cir • Ste 600 • Tucson, AZ 85711
(520) 547-7904 • www.jsrarchinc.com

Consultants:

This Electronic Signature Has Been Authorized By Me This November 01, 2022

Registered Professional Engineer (Structural) CERTIFICATE NO. 45715 DAVID N. GIBBENS DATE SIGNED 11/01/22 ARIZONA, U.S.A.

WHITERIVER ADMINISTRATION OFFICE BUILDING

200 W HOSPITAL DR
WHITERIVER, AZ 85941

U. S. DEPARTMENT OF HEALTH AND HUMAN SERVICES
INDIAN HEALTH SERVICE
PHOENIX AREA OFFICE

No.	Date	Description

Issue Date:	11/3/2022
Project No:	21-020
Scale:	As Indicated
Drawn By:	SRK
Checked By:	DNG

FINAL CD

Sheet Title:

TYPICAL DETAILS

Sheet Number:

S105

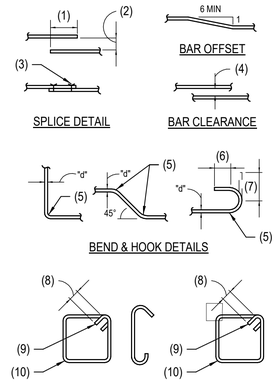

NOTES:

1. LAP - SEE G.S.N.
2. MAXIMUM 1/5 LAP BUT NOT MORE THAN 6".
3. WIRE TIES.
4. 1d (1" MINIMUM).
5. RADIUS=3d FOR BARS NOT OVER #8; 4d FOR #9, #10 AND #11 BARS; 5d FOR #14 AND #18 BARS. 5d FOR ALL GRADE 40 BARS WITH 180 DEGREE HOOK.
6. 4d (4" MINIMUM).
7. 12d (90 DEGREE HOOK).
8. 6d (4" MINIMUM).
9. 135 DEGREE BEND.
10. BEND AROUND 1 1/2" PIN FOR #3 BARS. BEND AROUND 2" PIN FOR #4 BARS. BEND AROUND 2 1/2" PIN FOR #5 BARS.

25 TYPICAL CONCRETE REINFORCING BAR DETAILS

SCALE: NOT TO SCALE — 200-050-TYP

TENSION AND COMPRESSION BARS					
MASONRY PSI		f'm = 2,000 PSI			
MASONRY WIDTH		8"		12"	
SIZE / LOCATION OF BARS	GR.	CENTERED BARS	EDGE BARS	CENTERED BARS	EDGE BARS
#3	40	12"	12"	12"	12"
	60	14"	14"	14"	14"
#4	40	12"	15"	12"	15"
	60	18"	22"	18"	22"
#5	40	15"	23"	15"	23"
	60	22"	34"	22"	34"
#6	60	38"	54"	34"	54"
#7	60	52"	63"	40"	63"
#8	60	72"	72"	53"	72"
#9	60	N/A	N/A	63"	81"

NOTES:
1. BASED ON IBC SECTION 2108.
2. CENTERED BARS ARE LOCATED IN THE CENTER OF A MASONRY CELL AND USUALLY ARE CONFIGURED WITH (1) BAR PER CELL.
3. EDGE BARS ARE LOCATED ON ONE OR BOTH FACES OF THE MASONRY WALL WITH A MINIMUM MASONRY CLEAR COVER OF 2" AND USUALLY ARE CONFIGURED WITH (2) BARS PER CELL.

26 TYPICAL MINIMUM REINFORCING BAR SPLICE LENGTHS IN MASONRY

SCALE: NOT TO SCALE — 401-012-TYP

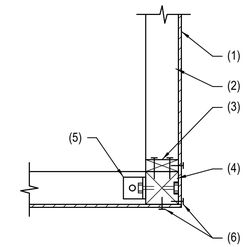

NOTES:

1. SHEATHING.
2. WOOD STUD WALL.
3. WOOD STUD WITH 16d NAILS AT 6" O.C.
4. WOOD POST PER HOLDOWN SCHEDULE.
5. HOLDOWN PER SHEAR WALL SCHEDULE. IF HOLDOWN DIFFERS ON THE SCHEDULE BECAUSE OF THE ORTHOGONAL DIRECTION, USE THE HOLDOWN WITH THE LARGEST ALLOWABLE LOAD VALUE.
6. EDGE ATTACHMENT U.N.O. PER SHEARWALL SCHEDULE.

NOTE:
DETAIL SIM AT STRAP HOLD DOWN.

22 PLAN VIEW - TYPICAL HOLDOWN AT WOOD STUD WALL CORNER

SCALE: NOT TO SCALE — 602-017-TYP

NOTES:

1. 4x4 - W1.4xW1.4 W.W.F. OR #4 AT 12" O.C.
2. FIRM UNDISTURBED SOIL OR COMPACTED BASE.
3. PIPE OR CONDUIT.
4. TYPICAL SLAB THICKNESS.

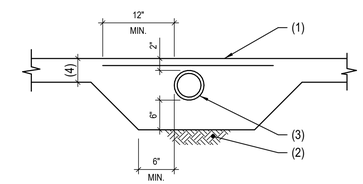

23 TYPICAL SLEEVE FOR PIPE AT SLAB

SCALE: NOT TO SCALE — 200-022-TYP

NOTES:

1. WOOD STUD WALL.
2. 16d AT 12" O.C. STAGGERED BOTH SIDES.
3. (2) 16d AS SHOWN.
4. (2) 16d TOENAILS - EACH SIDE - EACH END.
5. RUN VERTICAL STUD UP PAST LINTEL AS SHOWN. SEE JAMB STUD FOR EXTERIOR OPENINGS.
6. 16d NAILS AT 12" O.C.
7. WOOD LINTEL.
8. DOUBLE STUDS UNDER LINTEL BEARINGS FOR OPENING WIDTHS GREATER THAN 3'-0".

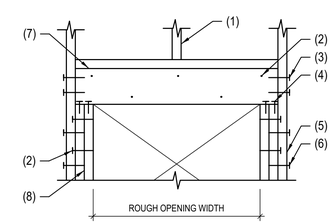

NOTE:
1. THIS SCHEDULE MAY BE USED ONLY IN WALLS WHERE NO OTHER LINTEL HAS BEEN CALLED OUT ON THE PLANS OR SCHEDULES.
2. PROVIDE DOUBLE 2x6 STUDS UNDER BEARING LINTELS FOR OPENING WIDTHS GREATER THAN 3'-0".

24 TYPICAL NON-SCHEDULED LINTEL

SCALE: NOT TO SCALE — 121181-S1.4-25

SCHNEIDER
STRUCTURAL ENGINEERS
CREATING ELEGANT SOLUTIONS
435 East 9th Street | Tucson, AZ 85705 | 520.512.8183 | www.sastructural.com
Project Number: 121083

UNLESS THIS DRAWING IS SIGNED AND SEALED BY A LICENSED STRUCTURAL ENGINEER, IT IS A PRELIMINARY DESIGN AND SHALL NOT BE USED FOR CONSTRUCTION.

JSRa
JOHNSON SMITTHIPONG & ROSAMOND ASSOCIATES, INC.
5210 E Williams Cir • Ste 600 • Tucson, AZ 85711
(520) 547-7904 • www.jsrarchinc.com

Consultants:

This Electronic Signature has been authorized by the Registrant of Record.
Registered Professional Engineer (Structural)
CERTIFICATE NO. 45716
DAVID N. GIBBENS
DATE SIGNED 11/01/22
ARIZONA, U.S.A.

WHITERIVER ADMINISTRATION OFFICE BUILDING

200 W HOSPITAL DR
WHITERIVER, AZ 85941

U. S. DEPARTMENT OF HEALTH AND HUMAN SERVICES
INDIAN HEALTH SERVICE
PHOENIX AREA OFFICE

No.	Date	Description

Issue Date:	11/3/2022
Project No:	21-020
Scale:	As Indicated
Drawn By:	SRK
Checked By:	DNG

FINAL CD

Sheet Title:

TYPICAL DETAILS

Sheet Number:

S106

Autodesk Docs://21-020 Whiteriver Admin v2022/21-020 05 Strc WR Admin 2022.rvt
11/1/2022 7:01:05 AM

LINTEL (LT) SCHEDULE

844

MARK	TYPE	LINTEL SIZE	REMARKS
LT1	WOOD	(3) 2x6	(1) 2x6 TRIMMER STUD (1) 2x6 JAMB STUD
LT2	WOOD	(2) 2x6	(1) 2x6 TRIMMER STUD (2) 2x6 JAMB STUD NOTE 4
LT3	WOOD	6x10	(1) 2x6 TRIMMER STUD (2) 2x6 JAMB STUD
LT4	WOOD	5.5" x 16.5" GLB	(1) 2X6 TRIMMER STUD (3) 2X6 JAMB STUDS

NOTES:
1. SCHEDULES APPLY U.N.O. SEE TYPICAL DETAILS FOR ADDITIONAL INFORMATION.
2. WHERE SHEARWALL HOLD DOWNS ARE ATTACHED TO JAMB STUDS, SEE HOLD DOWN SCHEDULE FOR MINIMUM NUMBER OF STUDS.
3. ATTACH LINTEL TO BEAM'S COLUMN WHERE APPLIES.
4. AT INTERIOR LINTELS, USE (1) 2x6 JAMB STUD.

COLUMN (C) SCHEDULE

810

MARK	SIZE	BASE CONNECTION	REMARKS
C1	6x6 (WOOD)	(2) SIMPSON H3 CLIPS TO SILL PLATE BELOW	---
C2	4x6 (WOOD)	(2) SIMPSON H3 CLIPS TO SILL PLATE BELOW	---
C3	HSS 3x3x3/8 (STEEL)	3/4" x 10" x 0'-10" STEEL BASEPLATE WITH (4) 3/4" DIA. ANCHOR BOLTS	---
C4	4x6 (WOOD)	SIMPSON AC CAP, UPSIDE DOWN, TO LINTEL BELOW	---
C5	HSS3x3x3/16 (STEEL)	3/4" x 3.5" x 10" STEEL BASEPLATE WITH (2) 3/4" DIA. x 4" EMBED SIMPSON STRONG BOLT 2 ExPANSION ANCHORS	---

SHEAR WALL (SW) SCHEDULE (WOOD FRAMING)

821

MARK	SHEATHING MATERIAL AND ATTACHMENT				SILL PLATE ATTACHMENT		REMARKS
	SHEATHING TYPE	SHEATHING THICKNESS	NUMBER OF FACES	EDGE ATTACHMENT	ATTACHMENT AT FOUNDATION	ATTACHMENT AT FRAMING	
SW1	W.S.P.	3/8"	1	8d NAILS AT 6" O.C. EDGE, 12" O.C. FIELD	SIMPSON MASA ANCHORS AT 32" O.C.	SIMPSON LTP4 AT 9" O.C.	A
SW2	W.S.P.	3/8"	1	8d NAILS AT 4" O.C. EDGE, 12" O.C. FIELD	SIMPSON MASA ANCHORS AT 16" O.C.	SIMPSON LTP4 AT 7" O.C.	A
SW3	W.S.P.	3/8"	1	8d NAILS AT 6" O.C. EDGE, 12" O.C. FIELD	SIMPSON PDPA SHOT PINS AT 4" O.C.	16d NAILS AT 16" O.C.	B
SW4	W.S.P.	3/8"	1	8d NAILS AT 4" O.C. EDGE, 12" O.C. FIELD	SIMPSON PDPA SHOT PINS AT 4" O.C.	16d NAILS AT 16" O.C.	B

GENERAL NOTES:
1. SEE TYPICAL DETAILS FOR ADDITIONAL INFORMATION.
2. WHERE 8d NAILS ARE SPACED AT 2" O.C. OR WHERE 10d NAILS ARE SPACED AT 3" O.C. OR LESS, FRAMING MEMBER SHALL BE 3x OR THICKER AND NAILS SHALL BE STAGGERED.
3. (2) 2x STUDS STITCH-NAILED WITH 2 ROWS OF 16d NAILS AT 12" O.C. STAGGERED MAY BE SUBSTITUTED FOR 3x STUDS.
4. MAxIMUM STUD SPACING IS 16" O.C.
5. ORIENT PANELS HORIZONTALLY OR VERTICALLY. ALL PANEL EDGES SHALL BE BACKED WITH 2x FRAMING (3x AS REQUIRED). BLOCK BETWEEN STUDS AT HORIZONTAL PANEL EDGES, U.N.O. AT GYPSUM BOARD SHEAR WALLS ONLY, BLOCKING BETWEEN PANEL EDGES IS NOT REQUIRED.
6. EDGE ATTACHMENT SPACING APPLIES TO ALL STUDS AT PANEL EDGES, TOP AND BOTTOM PLATES AND BLOCKING AT PANEL EDGES. LOCATE NAILS 3/8" MINIMUM FROM EDGES.
7. NAILS SHALL BE COMMON OR GALVANIZED (HOT DIPPED OR TUMBLED) BOx NAILS #6 TYPE S OR W . DRYWALL SCREWS MAY BE SUBSTITUTED FOR NAILS AT GYPSUM BOARD SHEATHING.

KEYED NOTES:
A. ATTACH BOTH LEGS OF THE SIMPSON'S MASA MUDSILL ANCHORS TO SILL PLATE. REFER TO MANUFACTURER FOR INSTALLATION REQUIREMENTS.
B. 1" MINIMUM PENETRATION IN CONCRETE FOOTING FROM SIMPSON'S PDPA SHOT PINS.

FOOTING (F) SCHEDULE

800

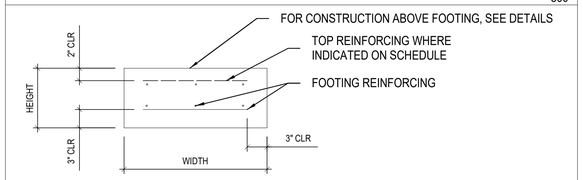

MARK	DIMENSIONS			FOOTING REINFORCING	REMARKS
	HEIGHT	WIDTH	LENGTH		
F1	12"	18"	CONT.	(2) #4 CONTINUOUS	
F2	12"	24"	CONT.	(3) #4 CONTINUOUS	
F3	12"	3'-0"	3'-0"	(4) #4 EACH WAY	
F4	12"	4'-0"	4'-0"	(5) #4 EACH WAY	

NOTES:
1. FOR FOOTING BEARING DEPTH BELOW GRADE, SEE G.S.N. U.N.O..
2. CENTER FOOTINGS UNDER WALLS OR COLUMNS U.N.O..
3. WHERE FOOTINGS INTERSECT, THE GREATER REINFORCING REQUIREMENTS SHALL GOVERN.

HOLDOWN (H) SCHEDULE

MARK	HOLDOWN TYPE	CONNECTION TO STUDS	CONNECTION AT BASE	REMARKS
H1	SIMPSON LSDTH8	(20) .148 x 3 1/4" NAILS INTO DOUBLE STUDS	CAST-IN-PLACE	---
H2	SIMPSON STHD14	(30) .148 x 3 1/4" NAILS INTO DOUBLE STUDS	CAST-IN-PLACE	---
H3	SIMPSON HDU5-SDS2.5	(14) 1/4"x2 1/2" SDS NAILS INTO DOUBLE STUDS	5/8" DIA. x 8" EMBED THD ROD WITH SIMPSON SET 3G EPOxY	---

NOTES:
1. EMBEDMENT DEPTH AT SLAB EDGES SHALL BE MEASURED FROM TOP OF FOOTING. SEE DETAILS FOR MORE INFORMATION.
2. CAST-IN-PLACE ANCHORS MAY BE REPLACED WITH SAME DIAMETER A307 ALL-THREADED RODS POST-INSTALLED WITH SIMPSON SET-EPOxY. EMBED DEPTH REMAINS.

SCHNEIDER
STRUCTURAL ENGINEERS
CREATING ELEGANT SOLUTIONS
435 East 9th Street | Tucson, AZ 85705 | 520.512.8183 | www.sastructural.com

Project Number: 121083

UNLESS THIS DRAWING IS SIGNED AND SEALED BY A LICENSED STRUCTURAL ENGINEER, IT IS A PRELIMINARY DESIGN AND SHALL NOT BE USED FOR CONSTRUCTION.

JSRa
JOHNSON SMITTHIPONG & ROSAMOND ASSOCIATES, INC.
5210 E Williams Cir • Ste 600 • Tucson, AZ 85711
(520) 547-7904 • www.jsrarchinc.com

Consultants:

This Electronic Signature has been authorized by the Registrant Registered Professional Engineer (Structural) CERTIFICATE NO. 45716 DAVID N. GIBBENS DATE SIGNED 11/01/22 ARIZONA, U.S.A.

WHITERIVER ADMINISTRATION OFFICE BUILDING

200 W HOSPITAL DR
WHITERIVER, AZ 85941

U. S. DEPARTMENT OF HEALTH AND HUMAN SERVICES
INDIAN HEALTH SERVICE
PHOENIX AREA OFFICE

No.	Date	Description

Issue Date:	11/3/2022
Project No:	21-020
Scale:	As Indicated
Drawn By:	SRK
Checked By:	DNG

FINAL CD

Sheet Title:

SCHEDULES

Sheet Number:

S107

Autodesk Docs://21-020 Whiteriver Admin v2022/21-020 05 Strc WR Admin 2022.rvt
11/1/2022 7:01:05 AM

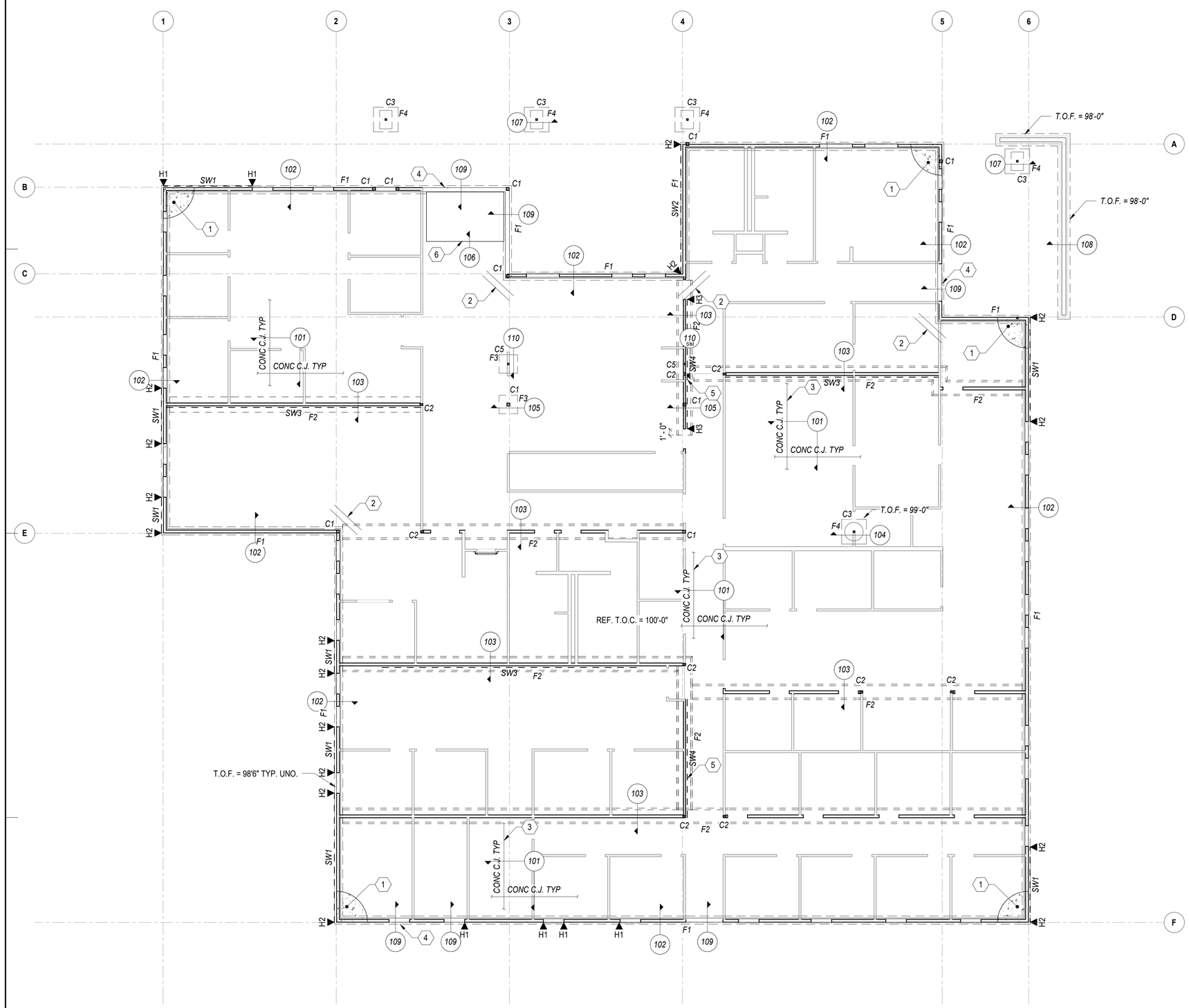

FOUNDATION PLAN

SCALE: 1/8" = 1'-0"

FOUNDATION KEYNOTES:

1. 5" CONCRETE SLAB ON GRADE REINFORCED WITH 3 LBS/CUBIC YARD OF MACRO FIBER OVER 4" ABC OVER PREPARED SUBGRADE PER GEOTECHNICAL REPORT.
2. (2) #4x4'-0" LONG CENTERED IN SLAB AT 4" O.C. - TYPICAL AT RE-ENTRANT CORNERS AND DISCONTINUOUS SLAB JOINTS U.N.O.
3. INSTALL CONCRETE CONTROL JOINT PER DETAIL. SPACING BETWEEN JOINTS SHALL NOT EXCEED 15'-0". GENERAL CONTRACTOR SHALL SUBMIT A JOINT LAYOUT PLAN FOR REVIEW BY THE ARCHITECT AND STRUCTURAL ENGINEER PRIOR TO CUTTING SLAB JOINTS.
4. PROVIDE 1/2" PREFORMED JOINT FILLER AT ALL LOCATIONS WHERE EXTERIOR SLABS ABUT BUILDINGS U.N.O..
5. INTERIOR SHEARWALL SHALL BE 2X4 DF #2 AT 16" O.C..
6. RECESSED CONCRETE SLAB FOR WALKOUT MAT. REFERENCE ARCHITECTURAL FOR LOCATION AND GEOMETRY.

FOUNDATION GENERAL NOTES:

1. PERIMETER EXTERIOR WALLS SHALL BE 2X6 DF#2 STUDS AT 16" O.C. INTERIOR BEARING AND SHEAR WALLS SHALL BE 2X6 DF#2 STUDS AT 16" O.C.
2. ALL EXTERIOR WALLS SHALL BE SHEATHED WITH 3/8" WSP SHEATHING AND FASTENED WITH 8d NAILS AT 6" O.C. EDGE, 12" O.C. FIELD U.N.O.. BLOCKING AT PANEL EDGES IS NOT REQUIRED UNO IN SHEARWALL SCHEDULE.
3. WOOD FRAMING MEMBERS THAT REST ON EXTERIOR FOUNDATION WALLS AND ARE LESS THAN 6" FROM EXPOSED EARTH SHALL BE PRESSURE TREATED.

SCHNEIDER
STRUCTURAL ENGINEERS
CREATING ELEGANT SOLUTIONS
435 East 9th Street | Tucson, AZ 85705 | 520.512.8183 | www.sastructural.com

Project Number: 121083

UNLESS THIS DRAWING IS SIGNED AND SEALED BY A LICENSED STRUCTURAL ENGINEER, IT IS A PRELIMINARY DESIGN AND SHALL NOT BE USED FOR CONSTRUCTION.

JSRa
JOHNSON SMITTHIPONG & ROSAMOND ASSOCIATES, INC.
5210 E Williams Cir • Ste 600 • Tucson, AZ 85711
(520) 547-7904 • www.jsrarchinc.com

Consultants:

This Electronic Signature has been authorized by the Registrant

Registered Professional Engineer (Structural)
CERTIFICATE NO. 45716
DAVID N. GIBBENS
DATE SIGNED 11/01/22
ARIZONA, U.S.A.

WHITERIVER ADMINISTRATION OFFICE BUILDING

200 W HOSPITAL DR
WHITERIVER, AZ 85941

U. S. DEPARTMENT OF HEALTH AND HUMAN SERVICES
INDIAN HEALTH SERVICE
PHOENIX AREA OFFICE

No.	Date	Description

Issue Date:	11/3/2022
Project No:	21-020
Scale:	As Indicated
Drawn By:	SRK
Checked By:	DNG

FINAL CD

Sheet Title:

FOUNDATION PLAN

Sheet Number:

S201

Autodesk Docs://21-020 Whiteriver Admin v2022/21-020 05 Strc WR Admin 2022.rvt
11/1/2022 7:01:06 AM

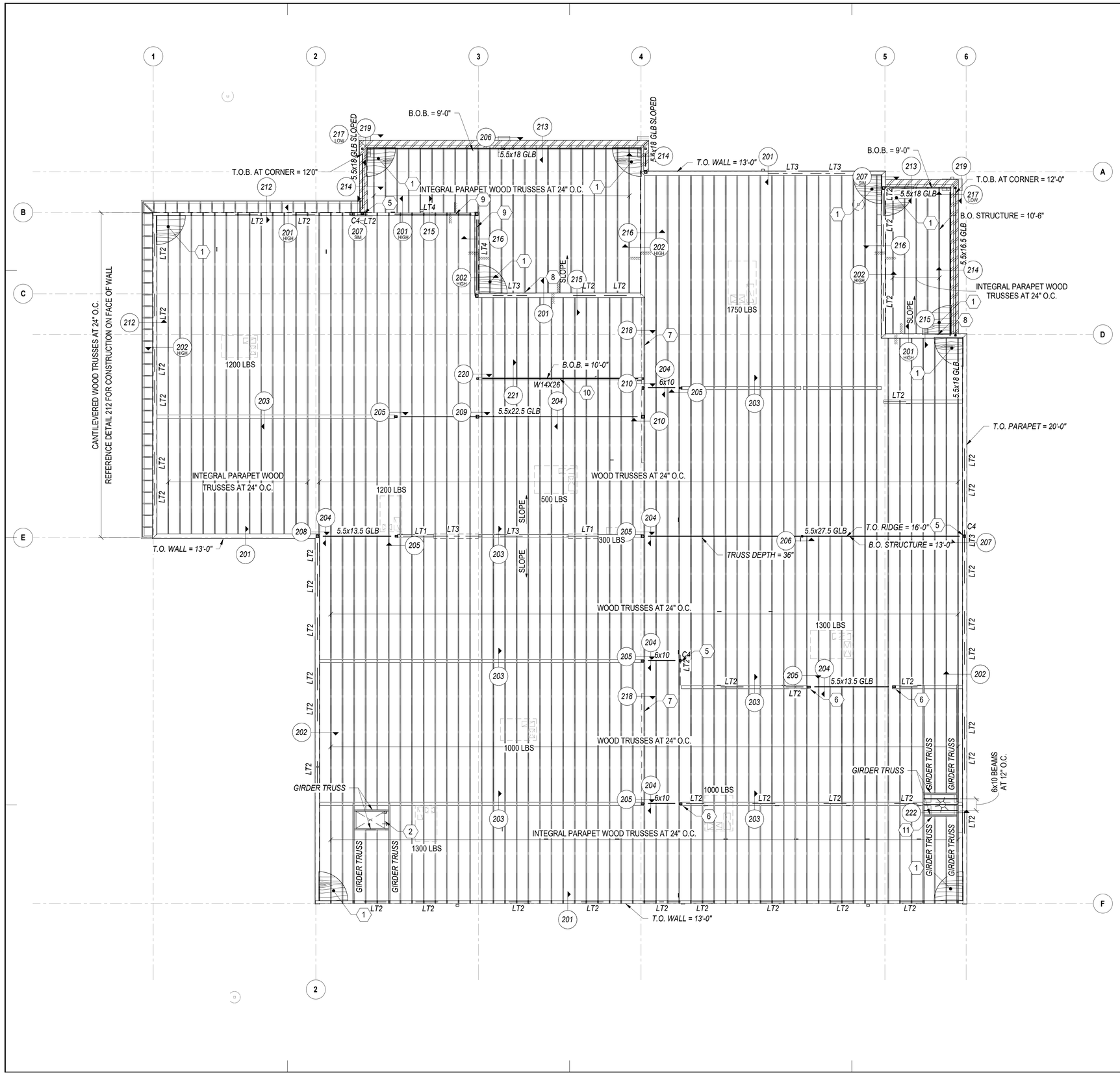

FRAMING KEYNOTES:

ALL KEYNOTES MAY NOT APPLY ON ALL SHEETS

1. 1/2" WSP SHEATHING AT ROOF. ATTACHMENT PER G.S.N.
2. ROOF HATCH OPENING. COORDINATE SIZE AND LOCATION WITH ARCHITECTURAL DRAWINGS. SEE TYPICAL DETAILS FOR FRAMING AT OPENINGS.
3. MECHANICAL OPENING. COORDINATE SIZE AND LOCATION WITH ARCHITECTURAL AND MECHANICAL DRAWINGS. SEE TYPICAL DETAILS FOR FRAMING AT OPENINGS.
4. MECHANICAL EQUIPMENT. WEIGHTS AND LOCATIONS SHOWN ARE APPROXIMATE. SEE ARCHITECTURAL AND MECHANICAL DRAWINGS FOR ADDITIONAL INFORMATION. PROVIDE ADDITIONAL JOISTS IF REQUIRED. SEE TYPICAL DETAILS FOR FRAMING AT OPENINGS.
5. WOOD POST ATTACHED ABOVE LINTEL. REFER TO SCHEDULE FOR CONNECTION SPECIFICATION.
6. ATTACH LINTEL TO WOOD POST WITH ONE LA35 SIMPSON CLIP ON EACH SIDE AND ONE LAT THE BOTTOM. THREE CLIPS TOTAL.
7. ALIGN TRUSS WITH SHEARWALL BELOW TO TRANSFER 240 PLF (ASD) OF SHEAR FROM WIND FROM TOP CHORD TO BOTTOM CHORD ALONG WALL LENGTH.
8. DEPTH OF PORCH TRUSS AT WALL = 24"..
9. CONNECT LINTELS TO FACE OF FULL HEIGHT WOOD COLUMN WITH SIMPSON HUC612 HANGERS.
10. LOW, FOR OPERABLE PARTITION.
11. 1 1/8" STURDIFLOOR OVER 1 1/8" STURDIFLOOR WITH SIMPSON SDS X 6" SCREWS AT 6" O.C. ALL EDGES AND FIELD

JSRa
JOHNSON SMITTHIPONG & ROSAMOND ASSOCIATES, INC.
5210 E Williams Cir • Ste 600 • Tucson, AZ 85711
(520) 547-7904 • www.jsrarchinc.com

Consultants:

This Electronic Signature has been authorized by the Registrant Professional Engineer (Structural)
Registered Professional Engineer (Structural)
CERTIFICATE NO. 45716
DAVID N. GIBBENS
DATE SIGNED 11/03/22
ARIZONA, U.S.A.

WHITERIVER ADMINISTRATION OFFICE BUILDING

200 W HOSPITAL DR
WHITERIVER, AZ 85941

U. S. DEPARTMENT OF HEALTH AND HUMAN SERVICES
INDIAN HEALTH SERVICE
PHOENIX AREA OFFICE

No.	Date	Description

Issue Date:	11/3/2022
Project No:	21-020
Scale:	As Indicated
Drawn By:	SRK
Checked By:	DNG

FINAL CD

Sheet Title:

ROOF FRAMING PLAN

Sheet Number:

S202

SCHNEIDER
STRUCTURAL ENGINEERS
CREATING ELEGANT SOLUTIONS
435 East 9th Street | Tucson, AZ 85705 | 520.512.8183 | www.sastructural.com

Project Number: 121083

UNLESS THIS DRAWING IS SIGNED AND SEALED BY A LICENSED STRUCTURAL ENGINEER, IT IS A PRELIMINARY DESIGN AND SHALL NOT BE USED FOR CONSTRUCTION.

Autodesk Docs://21-020 Whiteriver Admin v2022/21-020 05 Strc WR Admin 2022.rvt
11/1/2022 7:01:07 AM

FOUNDATION KEYNOTES:

ALL KEYNOTES MAY NOT APPLY ON ALL SHEETS

1. TYPICAL OF FOUR (4) RIBBONS: 24" WIDE x 12" THICK CONCRETE RIBBON FOOTING WITH (3) #4 CONTINUOUS AT BOTTOM.
2. FRAME PIERS (36" TALL MAXIMUM) SHALL BE SINGLE, OPEN OR CLOSED CELL CONRETE BLOCK, 8x8x16, INSTALL AT RIGHT ANGLES TO THE SUPPORT I-BEAMS. MORTAR IS NOT REQUIRED.
3. MODULAR QM TRAILER I-BEAMS.

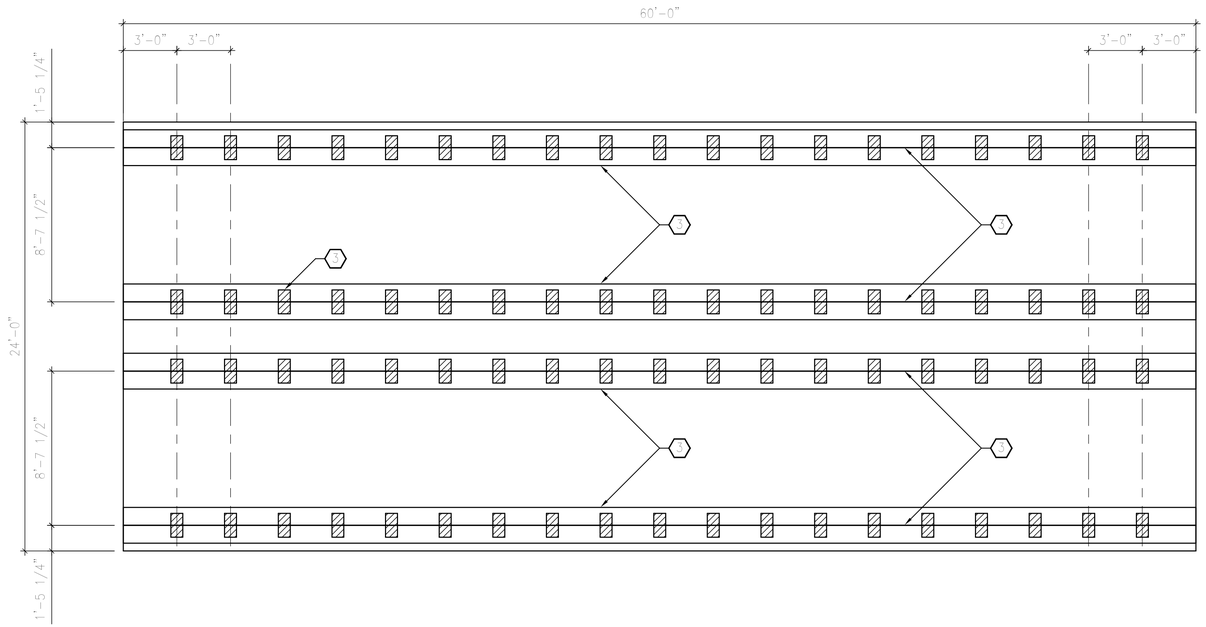

QM TRAILER PLAN

SCALE: 1/4" = 1'-0"

JSRa

JOHNSON SMITTHIPONG & ROSAMOND ASSOCIATES, INC.

5210 E Williams Cir • Ste 600 • Tucson, AZ 85711
(520) 547-7904 • www.jsrarchinc.com

Consultants:

This Electronic Signature has been Authorized By the Registrant of Record

Registered Professional Engineer (Structural)
CERTIFICATE NO. 45716
DAVID N. GIBBENS
DATE SIGNED 11/01/22
ARIZONA, U.S.A.

WHITERIVER ADMINISTRATION OFFICE BUILDING

200 W HOSPITAL DR
WHITERIVER, AZ 85941

U. S. DEPARTMENT OF HEALTH AND HUMAN SERVICES

INDIAN HEALTH SERVICE
PHOENIX AREA OFFICE

No.	Date	Description

Issue Date:	11/3/2022
Project No:	21-020
Scale:	As Indicated
Drawn By:	Author
Checked By:	Checker

FINAL CD

Sheet Title:

TRAILER FOUNDATION PLAN

Sheet Number:

S203

SCHNEIDER
STRUCTURAL ENGINEERS
CREATING ELEGANT SOLUTIONS
435 East 9th Street | Tucson, AZ 85705 | 520.512.8183 | www.sastructural.com

Project Number: 121083

UNLESS THIS DRAWING IS SIGNED AND SEALED BY A LICENSED STRUCTURAL ENGINEER, IT IS A PRELIMINARY DESIGN AND SHALL NOT BE USED FOR CONSTRUCTION.

Autodesk Docs://21-020 Whiteriver Admin v2022/21-020 05 Strc WR Admin 2022.rvt
11/1/2022 7:01:07 AM

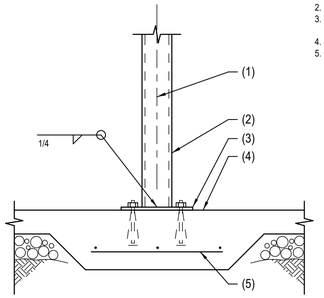

NOTES:

1. CENTERLINE OF COLUMN AND THICKENED SLAB.
2. STEEL COLUMN.
3. STEEL BASE PLATE WITH 3/4" DIA. EXPANSION BOLTS.
4. CONCRETE SLAB ON GRADE.
5. FOOTING REINFORCING.

110 STEEL COLUMN AT THICKENED CONCRETE SLAB
SCALE: NOT TO SCALE — 238-016

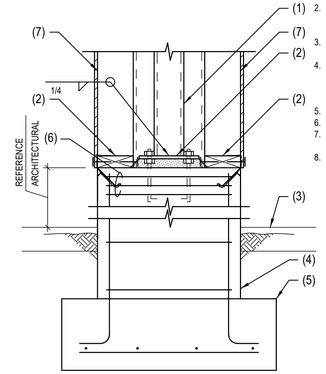

NOTES:

1. STEEL COLUMN.
2. STEEL BASEPLATE WITH DOUBLE NUTS OVER 1 1/2"± DRYPACK.
3. FINISHED GRADE OR CONCRETE SLAB WHERE OCCURS.
4. 24" X 36" CONCRETE PEDESTAL WITH (4) #4 VERTICALS AND #2 TIES AT 8" O.C.. (REF ARCHITECTURAL FOR ORIENTATION).
5. CONCRETE FOOTING.
6. (3) #3 TIES IN TOP 5".
7. WOOD STUD WALL COLUMN WRAP UTILIZING 2X6'S AT 16" O.C..
8. 2x TREATED WOOD SILL PLATE WITH SIMPSON MASA ANCHORS AT 24" O.C. MAXIMUM, (2) MINIMUM PER PLATE.

107 EXTERIOR STEEL COLUMN FOOTING AND PEDESTAL
SCALE: NOT TO SCALE — 121083-X-DETAILS-107

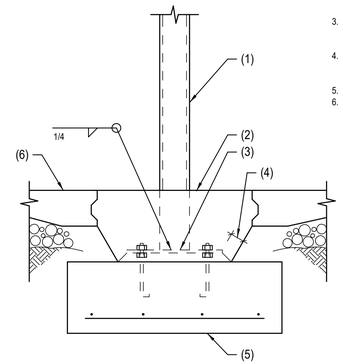

NOTES:

1. STEEL COLUMN.
2. CONCRETE CLOSURE POUR AROUND COLUMN PER TYPICAL DETAIL.
3. STEEL BASE PLATE WITH DOUBLE NUTS OVER 1 1/2"± DRYPACK.
4. 3" MIN CONCRETE COVER ALL AROUND STEEL BELOW GRADE.
5. CONCRETE FOOTING.
6. CONCRETE SLAB ON GRADE.

104 INTERIOR STEEL COLUMN FOOTING
SCALE: NOT TO SCALE — 238-015

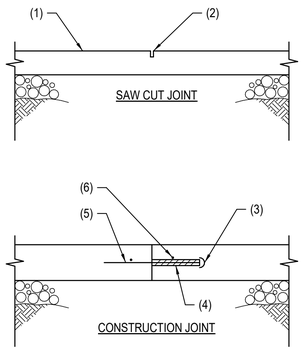

NOTES:

1. CONCRETE SLAB ON GRADE.
2. SAWCUT - 1/8" WIDE x 1/4 SLAB THICKNESS IN DEPTH - CUT SHALL BE MADE SOON ENOUGH TO PREVENT SHRINKAGE CRACKING BUT NOT SO SOON AS TO CAUSE SPALLING OF THE CONCRETE WHILE SAWING. WORK MUST BE ACCOMPLISHED WITHIN 12 HOURS OF CONCRETE PLACEMENT.
3. 1 1/2" LONG MASTIC CAP INSTALL WITH 1/2" GAP AT END.
4. POLYETHYLENE WRAP TO ASSURE SLIPPAGE.
5. 3/4" DIA. x 16" LONG SMOOTH DOWEL AT 12" O.C. - DOWELS MUST BE CAREFULLY ALIGNED AND SUPPORTED DURING CONCRETING OPERATIONS. MISALIGNED DOWELS CAUSE CRACKING.
6. (1) #4 CONTINUOUS.

NOTE:
CONSTRUCTION JOINTS NEED ONLY OCCUR AT EXPOSED EDGES DURING PLACEMENT.

101 TYPICAL CONTROL JOINTS IN CONCRETE SLAB ON GRADE
SCALE: NOT TO SCALE — 201-003-TYP

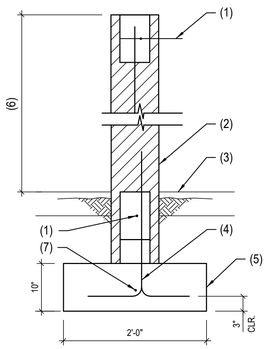

NOTES:

1. (1) #5 CONTINUOUS IN 8" DEEP GROUTED BOND BEAM.
2. 8" MASONRY WALL WITH #5 VERTICALS AT 48" O.C. GROUT SOLID BELOW GRADE.
3. FINISHED GRADE OR CONCRETE SLAB WHERE OCCURS.
4. DOWELS TO MATCH AND LAP VERTICAL WALL REINFORCING PER G.S.N. - ALTERNATE BENDS.
5. CONCRETE FOOTING.
6. FOR TOP OF WALL, SEE ARCHITECTURAL DRAWINGS - 6'-0" MAX.
7. (1) #4 CONTINUOUS.

NOTE:
AT CONTRACTOR'S OPTION, USE CONCRETE STEM WALL WITH SAME REINFORCING.

108 6'-0" MAXIMUM FREESTANDING MASONRY WALL AND FOOTING
SCALE: NOT TO SCALE — 121083-X-DETAILS-108

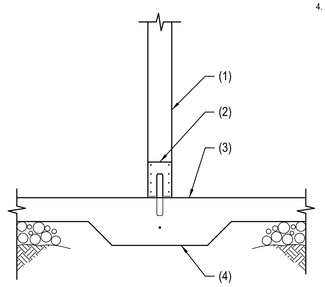

NOTES:

1. WOOD COLUMN.
2. SIMPSON PB POST BASE.
3. CONCRETE SLAB ON GRADE.
4. THICKENED SLAB FOOTING.

105 WOOD COLUMN FOOTING
SCALE: NOT TO SCALE — 246-008

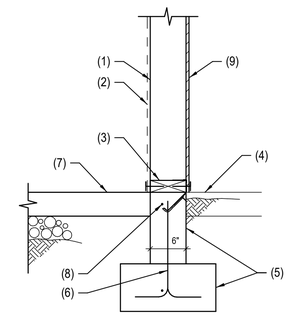

NOTES:

1. WOOD STUD WALL.
2. SHEATHING MATERIAL AND ATTACHMENT AS OCCURS.
3. 2x CONTINUOUS PLATE WITH SIMPSON MASA SILL PLATE ANCHORS AT 72" O.C. - U.N.O..
4. FINISHED GRADE OR CONCRETE SLAB WHERE OCCURS.
5. CONCRETE STEM WALL AND FOOTING.
6. #4 HOOKED DOWELS AT 48" O.C. - ALTERNATE BENDS.
7. CONCRETE SLAB ON GRADE.
8. (1) #4 CONTINUOUS.
9. EXTERIOR WSP SHEATHING. REFERENCE PLAN.

102 EXTERIOR WOOD STUD WALL FOOTING
SCALE: NOT TO SCALE — 121083-X-DETAILS-102

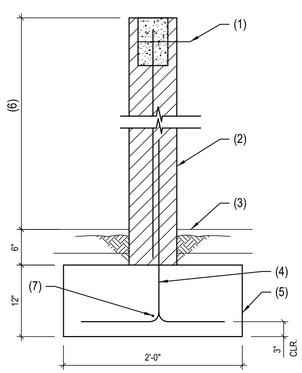

NOTES:

1. (1) #4 CONTINUOUS IN 8" DEEP GROUTED BOND BEAM.
2. 8" MASONRY WALL WITH #4 VERTICALS AT 48" O.C. GROUT SOLID BELOW GRADE.
3. FINISHED GRADE OR CONCRETE SLAB WHERE OCCURS.
4. DOWELS TO MATCH AND LAP VERTICAL WALL REINFORCING AT 48" O.C. MIN - ALTERNATE BENDS.
5. CONCRETE FOOTING.
6. FOR TOP OF WALL, SEE ARCHITECTURAL DRAWINGS - 4'-0" MAX.
7. (1) #4 CONTINUOUS.

NOTE:
AT CONTRACTOR'S OPTION, USE CONCRETE STEM WALL WITH SAME REINFORCING.

109 4'-0" MAXIMUM FREESTANDING MASONRY WALL AND FOOTING
SCALE: NOT TO SCALE — 121083-X-DETAILS-109

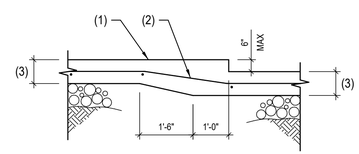

NOTES:

1. CONCRETE SLAB - SEE PLAN FOR REINFORCING.
2. SLAB REINFORCING TO CONTINUE THROUGH DEPRESSION.
3. SLAB THICKNESS, SEE PLAN.

106 TYPICAL SLAB DEPRESSION
SCALE: NOT TO SCALE — 202-010-TYP

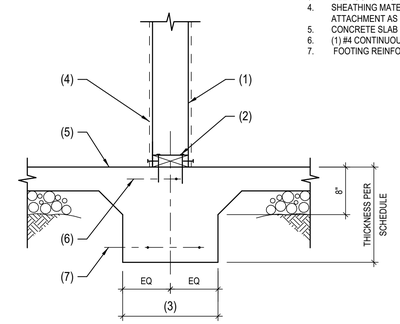

NOTES:

1. WOOD STUD WALL.
2. 2x CONTINUOUS PLATE WITH SIMPSON PDPA SHOT PINS AT 16" O.C. U.N.O.. PROVIDE (2) SHOT PINS WITHIN 6" OF THE END AT EVERY PLATE BREAK
3. SEE FOUNDATION PLAN.
4. SHEATHING MATERIAL AND ATTACHMENT AS OCCURS.
5. CONCRETE SLAB ON GRADE.
6. (1) #4 CONTINUOUS.
7. FOOTING REINFORCING PER SCHEDULE.

103 INTERIOR WOOD STUD WALL FOOTING
SCALE: NOT TO SCALE — 121083-X-DETAILS-103

SCHNEIDER
STRUCTURAL ENGINEERS
CREATING ELEGANT SOLUTIONS
435 East 9th Street | Tucson, AZ 85705 | 520.512.8183 | www.sastructural.com

Project Number: 121083

UNLESS THIS DRAWING IS SIGNED AND SEALED BY A LICENSED STRUCTURAL ENGINEER, IT IS A PRELIMINARY DESIGN AND SHALL NOT BE USED FOR CONSTRUCTION.

JSRa
JOHNSON SMITTHIPONG & ROSAMOND ASSOCIATES, INC.
5210 E Williams Cir • Ste 600 • Tucson, AZ 85711
(520) 547-7904 • www.jsrarchinc.com

Consultants:

This Electronic Signature has been authorized by the Registrant Registered Professional Engineer (Structural) CERTIFICATE NO. 45716 DAVID N. GIBBENS DATE SIGNED 11/01/22 ARIZONA, U.S.A.

WHITERIVER ADMINISTRATION OFFICE BUILDING

200 W HOSPITAL DR
WHITERIVER, AZ 85941

U. S. DEPARTMENT OF HEALTH AND HUMAN SERVICES
INDIAN HEALTH SERVICE
PHOENIX AREA OFFICE

No.	Date	Description

Issue Date:	11/3/2022
Project No:	21-020
Scale:	As Indicated
Drawn By:	SRK
Checked By:	DNG

FINAL CD

Sheet Title:

FOUNDATION DETAILS

Sheet Number:

S301

Autodesk Docs://21-020 Whiteriver Admin v2022/21-020 05 Strc WR Admin 2022.rvt
11/1/2022 7:01:07 AM

NOTES:

1. WOOD BEAM.
2. SIMPSON CC TYPE COLUMN CAP WITH (6) 3/4" DIA. THRU-BOLTS.
3. WOOD COLUMN.

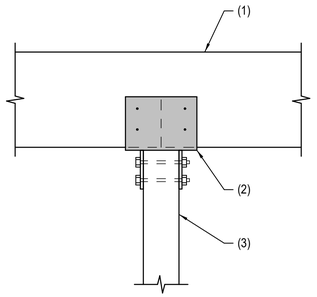

209 WOOD BEAM AT WOOD COLUMN
SCALE: NOT TO SCALE 637-003

NOTES:

1. PARAPET WALL BEYOND
2. 2x DOUBLE TOP PLATE WITH 16d NAILS AT 12" O.C., U.N.O.
3. WOOD BEAM.
4. SIMPSON H2 CLIP. EACH SIDE OF BEAM AND COLUMN.
5. WOOD COLUMN.

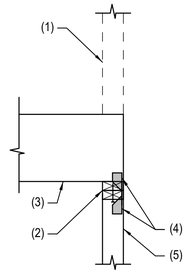

207 WOOD BEAM AT WOOD STUD WALL
SCALE: NOT TO SCALE 121083-X-DETAILS-207

NOTES:

1. 2X4X18" LONG BLOCKING BETWEEN TRUSSES. ATTACH TO TRUSS CHORDS/WEBS WITH (2) 16D NAILS.
2. WSP SHEATHING.
3. WOOD TRUSS.
4. WOOD BEAM.
5. SIMPSON HUS26 HANGERS.

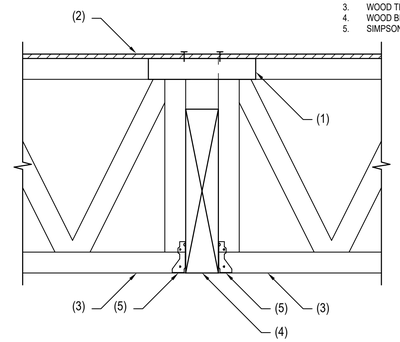

204 WOOD TRUSS AT WOOD BEAM
SCALE: NOT TO SCALE 121083-X-DETAILS-204

NOTES:

1. EDGE ATTACHMENT U.N.O.
2. SHEATHING.
3. 2x SOLID BLOCKING AT LEAST 2" DEEPER THAN PARAPET DEPTH.
4. DOUBLE 2x TOP PLATE WITH 16d AT 12" O.C.
5. SHEATHING MATERIAL AS OCCURS.
6. WOOD STUD WALL.
7. WOOD TRUSS.
8. SIMPSON H3 EACH TRUSS.
9. EXTERIOR CONTINUOUS WSP SHEATHING. REFERENCE PLAN AND SHEARWALL SCHEDULE FOR REQUIREMENTS.
10. SINGLE 2X TOP PLATE WITH (2) 16d END NAILS INTO PARAPET STUD END.

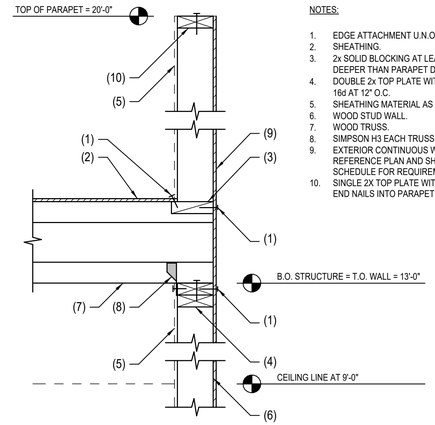

201 WOOD TRUSS AT WOOD STUD WALL
SCALE: NOT TO SCALE 121083-X-DETAILS-201

NOTES:

1. WOOD BEAM.
2. SIMPSON CC TYPE COLUMN CAP WITH (2) 3/4" DIA. THRU-BOLTS.
3. WOOD COLUMN.

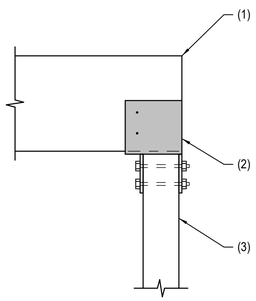

210 WOOD BEAM AT WOOD COLUMN
SCALE: NOT TO SCALE 637-012

NOTES:

1. WOOD TRUSS.
2. DOUBLE 2x TOP PLATE.
3. WOOD BLOCKING.
4. WOOD STUDS.
5. WOOD BEAM.
6. SIMPSON CS22 STRAP.
7. COLUMN PER PLAN.
8. SHEATHING.
9. TRUSS HANGER.

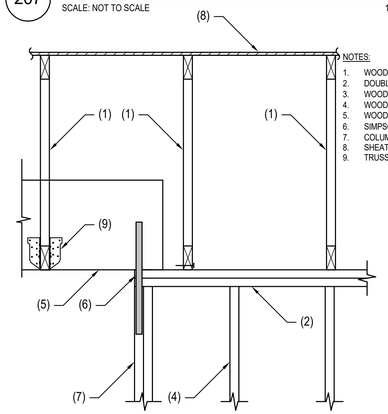

208 WOOD BEAM AT WOOD STUD WALL
SCALE: NOT TO SCALE 121083-X-DETAILS-208

NOTES:

1. COLUMN PER PLAN.
2. DOUBLE 2x TOP PLATE.
3. WOOD BEAM.
4. SIMPSON H2 POST TO BEAM EACH SIDE.
5. WOOD TRUSSES.

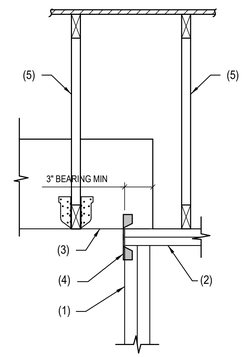

NOTE:
FRAMING ABOVE NOT SHOWN FOR CLARITY.

205 WOOD BEAM AT WOOD STUD WALL
SCALE: NOT TO SCALE 121083-X-DETAILS-204

NOTES:

1. SIMPSON H3 AT EVERY OTHER STUD.
2. DOUBLE 2x BLOCKING WITH (3) 16d NAILS PER BLOCK.
3. WOOD STUD WALL OR END-WALL TRUSS AS OCCURS.
4. EDGE NAILING.
5. W.S.P. SHEATHING.
6. (3) 16d NAILS TO EACH BLOCK.
7. 2x4 CONTINUOUS WITH (2) 16d NAILS AT EACH STUD.
8. SHEAR WALL NAILING PER SCHEDULE.
9. SHEATHING MATERIAL AS OCCURS.
10. PREFAB ROOF TRUSS.
11. SINGLE 2x TOP PLATE WITH (2) 16d NAILS TO TOP OF PARAPET WALL.
12. WOOD BEAM SUPPORT AT 305A.
13. DOUBLE 2x WOOD TOP PLATE.
14. SHEATHING AND LEDGER AS OCCURS.
15. SEE DETAIL 211 FOR GYPSUM CEILING BRACING AT END WALL.

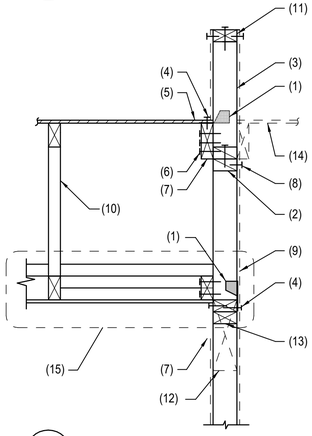

TYPICAL NOTE:
AT CONTRACTOR'S OPTION, END WALL MAY BE BALLOON FRAMED. IF THIS OPTION IS CHOSEN, GYPSUM CEILING BRACING MAY BE OMITTED.

202 WOOD TRUSS AT WOOD STUD WALL
(A) AS NOTED SCALE: NOT TO SCALE 118294-S5.0-305

NOTES:

1. GABLE END TRUSS.
2. ENDWALL STUDS.
3. TRUSS BOTTOM CHORD. WEBS NOT SHOWN FOR CLARITY.
4. SIMPSON CS20x 32" LONG STRAP WITH (10) 8d NAILS EACH END OF STRAP.
5. #6 DRYWALL SCREWS AT 7" O.C.
6. 10d NAILS AT 12" O.C.
7. 2x4 BLOCK WITH (3) 10d NAILS TO CONTINUOUS LATERAL BRACE IN FIRST BAY.
8. (2) 10d NAILS.
9. #6 DRYWALL SCREWS AT 10" O.C.
10. GYPSUM BOARD.
11. 2x4 CONTINUOUS LATERAL BRACE AT 6'-0" O.C. MAXIMUM. EXTEND A MINIMUM OF 12'-0" FROM END WALL.
12. 2x4 OR 2x6 CONTINUOUS RUNNER.

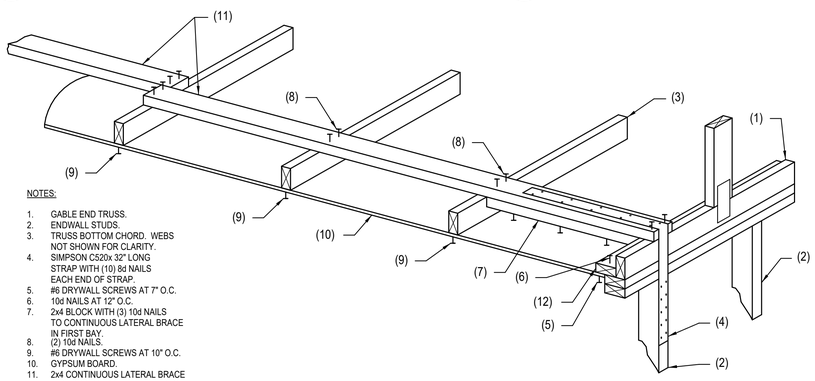

211 CEILING BRACING AT GABLE ENDWALL
SCALE: NOT TO SCALE 121083-X-DETAILS-211

NOTES:

1. WOOD BEAM.
2. 1/4" BENT STEEL "U" PLATE WITH 4-3/4" DIA. THRU-BOLTS.
3. STEEL COLUMN.

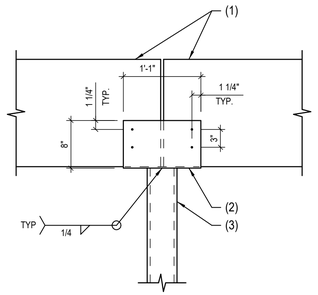

NOTE:
EQUIVALENT SIMPSON CCO COLUMN CAP MAY BE USED AT CONTRACTOR'S OPTION.

206 WOOD BEAMS AT STEEL COLUMN
SCALE: NOT TO SCALE 638-002

NOTES:

1. EDGE NAILING.
2. SHEAR PANEL PER TYPICAL DETAIL EVERY OTHER BAY.
3. DOUBLE 2x CONTINUOUS TOP PLATE WITH 16d AT 12" O.C.
4. SHEATHING MATERIAL AS OCCURS.
5. W.S.P. SHEATHING.
6. PREMANUFACTURED WOOD TRUSS.
7. STAGGER TRUSS BEARING, AS REQUIRED.
8. WOOD BEAM AT 318A.
9. (1) SIMPSON H3 AT TRUSS. (2) SIMPSON H3 AT TRUSS GIRDER.

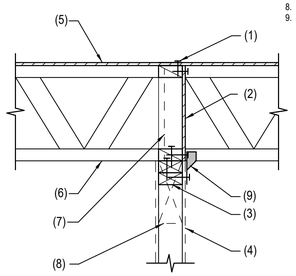

203 WOOD TRUSS AT WOOD STUD WALL
(A) AS NOTED SCALE: NOT TO SCALE 118294-S5.0-310

SCHNEIDER
STRUCTURAL ENGINEERS
CREATING ELEGANT SOLUTIONS
435 East 9th Street | Tucson, AZ 85705 | 520.512.8183 | www.sastructural.com
Project Number: 121083

UNLESS THIS DRAWING IS SIGNED AND SEALED BY A LICENSED STRUCTURAL ENGINEER, IT IS A PRELIMINARY DESIGN AND SHALL NOT BE USED FOR CONSTRUCTION.

JSRa
JOHNSON SMITTHIPONG & ROSAMOND ASSOCIATES, INC.
5210 E Williams Cir • Ste 600 • Tucson, AZ 85711
(520) 547-7904 • www.jsrarchinc.com

Consultants:

This Electronic Signature has been authorized by the Registrant Professional Engineer (Structural)
Registered Professional Engineer (Structural)
CERTIFICATE NO. 45716
DAVID N. GIBBENS
DATE SIGNED 11/03/22
ARIZONA, U.S.A.

WHITERIVER ADMINISTRATION OFFICE BUILDING

200 W HOSPITAL DR
WHITERIVER, AZ 85941

U. S. DEPARTMENT OF HEALTH AND HUMAN SERVICES
INDIAN HEALTH SERVICE
PHOENIX AREA OFFICE

No.	Date	Description

Issue Date:	11/3/2022
Project No:	21-020
Scale:	As Indicated
Drawn By:	SRK
Checked By:	DNG

FINAL CD

Sheet Title:

FRAMING DETAILS

Sheet Number:

S401

Autodesk Docs://21-020 Whiteriver Admin v2022/21-020 05 Strc WR Admin 2022.rvt
11/1/2022 7:01:08 AM

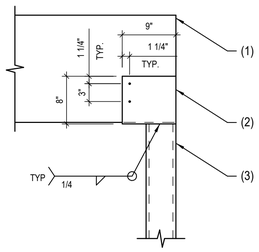

NOTES:

1. WOOD BEAM.
2. 1/4" BENT STEEL "U" PLATE WITH (2) 3/4" DIA. THRU-BOLTS.
3. STEEL COLUMN.

NOTE:
EQUIVALENT SIMPSON CCO COLUMN CAP MAY BE USED AT CONTRACTOR'S OPTION.

219 WOOD BEAM AT STEEL COLUMN
SCALE: NOT TO SCALE 638-041

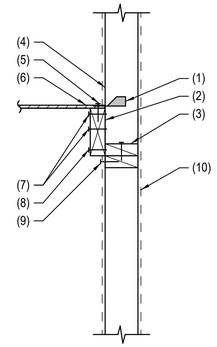

NOTES:

1. SIMPSON H3 AT EACH STUD.
2. 2X6 MINIMUM CONTINUOUS WOOD LEDGER.
3. DOUBLE 2x SOLID BLOCKING WITH (3) 16d PER BLOCK.
4. WOOD STUD WALL.
5. EDGE ATTACHMENT U.N.O.
6. SHEATHING.
7. (2) 16d PER STUD.
8. 16d AT 8" O.C.
9. NAILING PER SHEAR WALL SCHEDULE.
10. SHEATHING MATERIAL AS OCCURS.

216 WOOD LEDGER AT WOOD STUD WALL
SCALE: NOT TO SCALE 121083-X-DETAILS-216

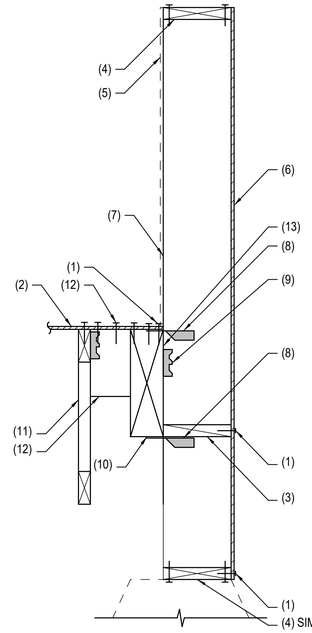

NOTES:

1. EDGE ATTACHMENT U.N.O.
2. EXTERIOR WSP SHEATHING.
3. 2X BLOCKING EACH BAY WITH (3) 10d TOENAILS TO WOOD BEAM EACH BLOCK.
4. 2X CONTINUOUS PLATE WITH (2) 16d END NAILS PER STUD, TOP AND BOTTOM.
5. SHEATHING MATERIAL AS OCCURS.
6. EXTERIOR CONTINUOUS WSP SHEATHING. REFERENCE PLAN AND SHEARWALL SCHEDULE FOR REQUIREMENTS.
7. 11 3/8" STUD PARAPET WALL AT 16" O.C.. VERTICAL LEG WOOD TRUSS.
8. SIMPSON H8 CLIP TOP AND BOTTOM AT EACH STUD.
9. SIMPSON A35 CLIP EACH STUD TO BEAM.
10. WOOD BEAM.
11. WOOD TRUSS.
12. 2X12 BLOCKING AT 24" O.C. WITH SIMPSON A34 EACH END.
13. LEDGER - SEE PLAN.

214 214: WOOD STUD PARAPET WALL AT WOOD BEAM
SCALE: NOT TO SCALE 121083-X-DETAILS-214

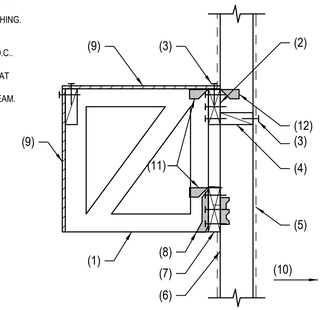

NOTES:

1. 2'0" WIDE EYEBROW TRUSS WITH SLOPED TOP CHORD AT 24" O.C.
2. 2x6 NAILER WITH (2) 16d NAILS PER STUD.
3. EDGE ATTACHMENT U.N.O.
4. 2x BLOCKING WITH (3) 16d NAILS PER BLOCK.
5. SHEATHING AS OCCURS.
6. WOOD STUD WALL.
7. 2x8 LEDGER WITH (3) 16d NAILS AND SIMPSON A35 PER STUD.
8. SIMPSON JB TYPE HANGER.
9. SHEATH TOP AND FACE OF EYEBROW FRAMING WITH 1/2" WSP SHEATHING.
10. FRAMING ON INTERIOR SIDE OF WALL PER OTHER DETAILS.
11. SIMPSON H3 CLIP EACH TRUSS TO LEDGER.
12. SIMPSON H3 EACH STUD TO LEDGER AT TOP.

212 WOOD EYEBROW TRUSS AT EXTERIOR FACE OF WOOD STUD WALL
SCALE: NOT TO SCALE 121083-X-DETAILS-212

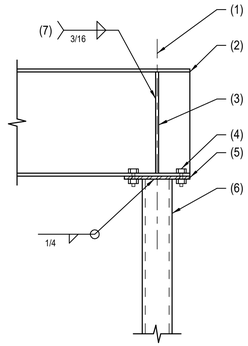

NOTES:

1. CENTERLINE OF COLUMN.
2. STEEL BEAM.
3. 3/8" STIFFENER PLATE EACH SIDE OF BEAM.
4. (4) 3/4" DIA. BOLTS ON BEAM GAUGE.
5. 1/2" CAP PLATE.
6. STEEL COLUMN.
7. WELD 3 SIDES - TYPICAL.

NOTE:
STUDS WELDED TO BOTTOM OF FLANGE MAY BE USED IN LIEU OF BOLTS.

220 STEEL BEAM TO STEEL COLUMN CONNECTION
SCALE: NOT TO SCALE 515-031

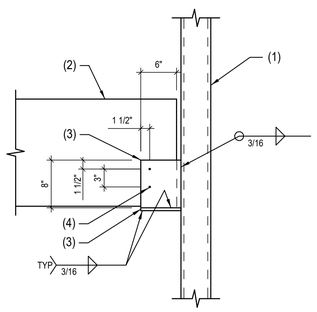

NOTES:

1. STEEL COLUMN.
2. WOOD BEAM.
3. 1/4" PLATE.
4. (2) 3/4" DIA. THRU-BOLTS.
5. 1/4" STEEL STIFFENER.

217 WOOD BEAM AT CONTINUOUS STEEL COLUMN
SCALE: NOT TO SCALE 121083-X-DETAILS-217

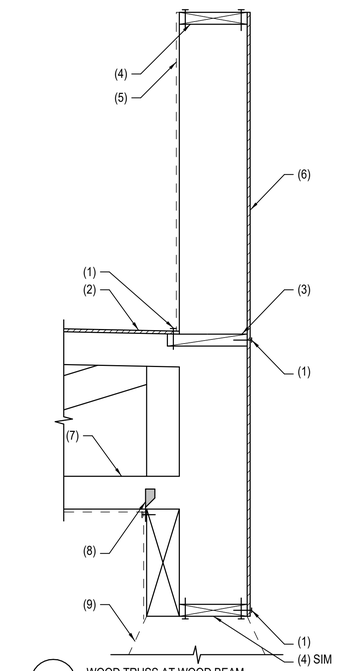

NOTES:

1. EDGE ATTACHMENT U.N.O.
2. SHEATHING.
3. 2x SOLID BLOCKING AT LEAST 2" DEEPER THAN PARAPET DEPTH.
4. SINGLE 2X TOP PLATE WITH (2) 16d END NAILS INTO PARAPET STUD END.
5. SHEATHING MATERIAL AS OCCURS.
6. EXTERIOR CONTINUOUS WSP SHEATHING. REFERENCE PLAN AND SHEARWALL SCHEDULE FOR REQUIREMENTS.
7. INTEGRAL PARAPET WITH EXTENDED VERTICAL LEG WOOD TRUSS.
8. SIMPSON H2.5 EACH TRUSS TO BEAM.
9. VENEERED WOOD FRAME COLUMN BEYOND. REFERENCE ARCHITECTURAL.

213 WOOD TRUSS AT WOOD BEAM
SCALE: NOT TO SCALE 121083-X-DETAILS-213

NOTES:

1. ROOF SHEATHING.
2. WOOD TRUSS.
3. L2x2x1/4 WITH 1/2" DIA. BOLTS EACH END TO TOP AND BOTTOM CHORD OF TRUSS AT 6'-0" O.C..
4. PLATE 3/8x5x0'-5".
5. STEEL BEAM. FOR FOLDING PARTITION TRACK ATTACHMENT TO BEAM - REFERENCE MANUFACTURER REQUIREMENTS.
6. ALTERNATE SIDES OF ANGLE ATTACHMENTS.

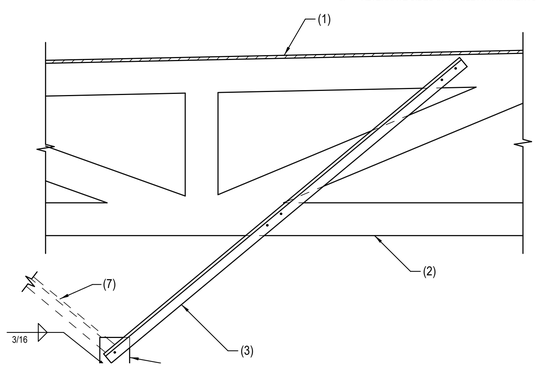

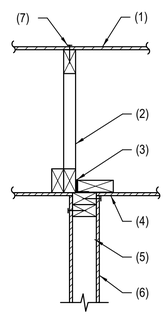

NOTES:

1. SHEATHING.
2. WOOD TRUSS.
3. SIMPSON A35 AT 12" O.C.
4. GYPSUM BOARD CEILING.
5. WOOD STUD WALL.
6. SHEATHING AND ATTACHMENTS AS REQUIRED.
7. DOUBLE EDGE ATTACHMENT U.N.O.

218 SHEARWALL PARALLEL TO TRUSS
SCALE: NOT TO SCALE 656-091

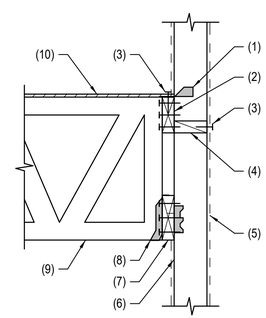

NOTES:

1. SIMPSON H2.5 EACH STUD TO LEDGER.
2. 2x6 NAILER WITH (2) 16d NAILS PER STUD.
3. EDGE ATTACHMENT U.N.O.
4. 2x BLOCKING WITH (3) 16d NAILS PER BLOCK.
5. SHEATHING AS OCCURS.
6. WOOD STUD WALL.
7. 2x8 LEDGER WITH (3) 16d NAILS AND SIMPSON A35 PER STUD.
8. SIMPSON JB TYPE HANGER.
9. WOOD TRUSS.
10. SHEATHING.

215 WOOD TRUSS AT WOOD STUD WALL
SCALE: NOT TO SCALE 656-014

SCHNEIDER
STRUCTURAL ENGINEERS
CREATING ELEGANT SOLUTIONS
435 East 9th Street | Tucson, AZ 85705 | 520.512.8183 | www.sastructural.com
Project Number: 121083

UNLESS THIS DRAWING IS SIGNED AND SEALED BY A LICENSED STRUCTURAL ENGINEER, IT IS A PRELIMINARY DESIGN AND SHALL NOT BE USED FOR CONSTRUCTION.

JSRa
JOHNSON SMITTHIPONG & ROSAMOND ASSOCIATES, INC.
5210 E Williams Cir • Ste 600 • Tucson, AZ 85711
(520) 547-7904 • www.jsrarchinc.com

Consultants:

Registered Professional Engineer (Structural)
CERTIFICATE NO. 45716
DAVID N. GIBBENS
DATE SIGNED 11/01/22
ARIZONA, U.S.A.
This Electronic Signature has been authorized by the Registrant named above.

WHITERIVER ADMINISTRATION OFFICE BUILDING

200 W HOSPITAL DR
WHITERIVER, AZ 85941

U. S. DEPARTMENT OF HEALTH AND HUMAN SERVICES
INDIAN HEALTH SERVICE
PHOENIX AREA OFFICE

No.	Date	Description

Issue Date:	11/3/2022
Project No:	21-020
Scale:	As Indicated
Drawn By:	SRK
Checked By:	DNG

FINAL CD

Sheet Title:

FRAMING DETAILS

Sheet Number:

S402

Autodesk Docs://21-020 Whiteriver Admin v2022/21-020 05 Strc WR Admin 2022.rvt
11/1/2022 7:01:08 AM

NOTES:

1. JIB CRANE AND LAG SCREW ATTACHMENT TO SUBSTRUCTURE.
2. (2) LAYERS OF 1 1/8" STURDI FLOOR PER PLAN.
3. WOOD BEAMS.
4. ROOF SHEATHING.
5. JIB CRANE BASE CURB FOR WATERPROOFING. REFERENCE ARCHITECTURAL.
6. WOOD GIRDER TRUSS WITH (2) 2x12 TOP CHORD

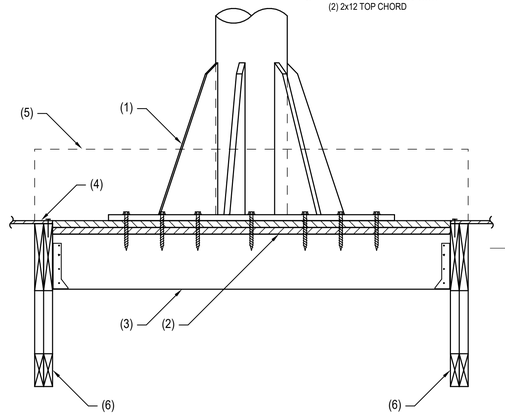

222 JIB CRANE AT WOOD ROOF

SCALE: NOT TO SCALE

121083-X-DETAILS-222

SCHNEIDER
STRUCTURAL ENGINEERS
CREATING ELEGANT SOLUTIONS
435 East 9th Street | Tucson, AZ 85705 | 520.512.8183 | www.sastructural.com

Project Number: 121083

UNLESS THIS DRAWING IS SIGNED AND SEALED BY A LICENSED STRUCTURAL ENGINEER, IT IS A PRELIMINARY DESIGN AND SHALL NOT BE USED FOR CONSTRUCTION.

JSRa
JOHNSON SMITTHIPONG & ROSAMOND ASSOCIATES, INC.
5210 E Williams Cir • Ste 600 • Tucson, AZ 85711
(520) 547-7904 • www.jsrarchinc.com

Consultants:

This Electronic Signature Has Been Authorized By The Registrant Of Record

Registered Professional Engineer (Structural)
CERTIFICATE NO. 45716
DAVID N. GIBBENS
DATE SIGNED 11/01/22
ARIZONA, U.S.A.

WHITERIVER ADMINISTRATION OFFICE BUILDING

200 W HOSPITAL DR
WHITERIVER, AZ 85941

U. S. DEPARTMENT OF HEALTH AND HUMAN SERVICES
INDIAN HEALTH SERVICE
PHOENIX AREA OFFICE

No.	Date	Description

Issue Date:	11/3/2022
Project No:	21-020
Scale:	As Indicated
Drawn By:	Author
Checked By:	Checker

FINAL CD

Sheet Title:

FRAMING DETAILS

Sheet Number:

S403

Autodesk Docs://21-020 Whiteriver Admin v2022/21-020 05 Strc WR Admin 2022.rvt
11/1/2022 7:01:08 AM

EXTERIOR EXTERIOR

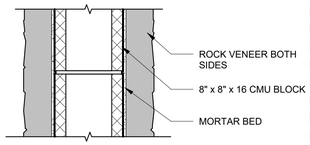

WALL TYPE 8.X

D1 WALL TYPE 8.X
1 1/2" = 1'-0"

EXTERIOR INTERIOR

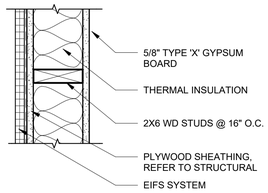

WALL TYPE EXT. 6.F

D2 WALL TYPE EXT. 6.F
1 1/2" = 1'-0"

INTERIOR INTERIOR

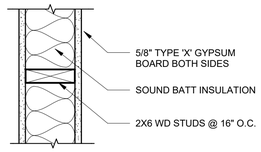

WALL TYPE INT 6.F

D3 WALL TYPE INT. 6.F
1 1/2" = 1'-0"

INTERIOR INTERIOR

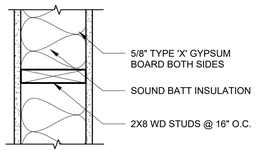

WALL TYPE 8.F

C1 WALL TYPE EXT. 6.F
1 1/2" = 1'-0"

INTERIOR INTERIOR

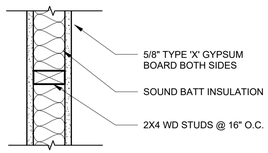

STC RATING - 50

WALL TYPE 4.F

C2 WALL TYPE 4.F
1 1/2" = 1'-0"

CHASE INTERIOR

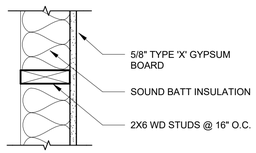

WALL TYPE 6.C

C3 WALL TYPE 6.C
1 1/2" = 1'-0"

WALL TYPE CONVENTION

4.F

STUD SIZE

4 - 2X4 WOOD
6 - 2X6 WOOD
8 - 2X8 WOOD

WALL HEIGHT AND RATING

.P - NON RATED WALL TO 6" ABOVE HIGHEST ADJACENT CEILING

.C - CHASE WALL TO 6" ABOVE HIGHEST ADJACENT CEILING

.F - NON RATED WALL TO STRUCTURE

.D - SOUND RATED - (STC)

.S - SMOKE PARTITION TO STRUCTURE

.1 - ONE HOUR RATED WALL TO STRUCTURE

.2 - TWO HOUR RATED WALL TO STRUCTURE

TYPICAL WALL ASSEMBLY NOTES:

1. REFER TO BUILDING ELEVATIONS FOR INFORMATION ON LOCATIONS OF ALL CONTROL JOINTS
2. CONSULT ARCHITECT IF WALL TYPE CLARIFICATION IS NEEDED PRIOR TO CONSTRUCTING THE WALL
3. PROVIDE FIRE STOPPING AT ALL PENETRATIONS IN ALL FIRE RATED WALLS AND CEILINGS.
4. CONTRACTOR TO PROVIDE STRAPPING UNDER GYPSUM BOARD TO SUPPORT OWNER FURNISHED EQUIPMENT, TOILET ACCESSORIES, CABINETRY, WALL HUNG SYSTEMS FURNITURE, WALL STOPS.
5. PROVIDE MOISTURE RESISTANT GYPSUM BOARD (NON-PAPER) IN ALL TOILETS AND JANITOR CLOSETS AND BACKER BOARD UNDER CERAMIC TILE WHERE OCCURS
6. REFER TO INTERIOR ELEVATIONS FOR INFORMATION ON WALL FINISHES
7. ALL WALLS WITH SOUND ATTENUATION BLANKETS ARE DESIGNED FOR AN STC RATING OF 40.SOUND ATTENUATION BLANKETS ARE A MINIMUM OF 3 1/2" U.N.O.
8. PROVIDE ACOUSTIC SEAL AT PERIMETER AND PENETRATION OF ALL SOUND RATED PARTITIONS AND OTHER CONSTRUCTION AS REQUIRED.
9. PROVIDE TYPE " X" GYPSUM BOARD AT ALL LOCATIONS AND THROUGHOUT.

ANNOTATION SYMBOLS

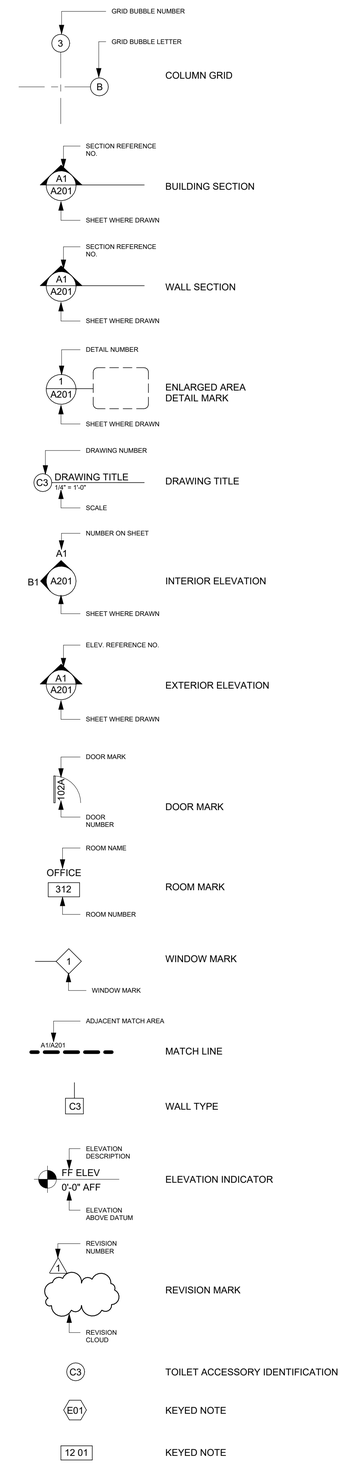

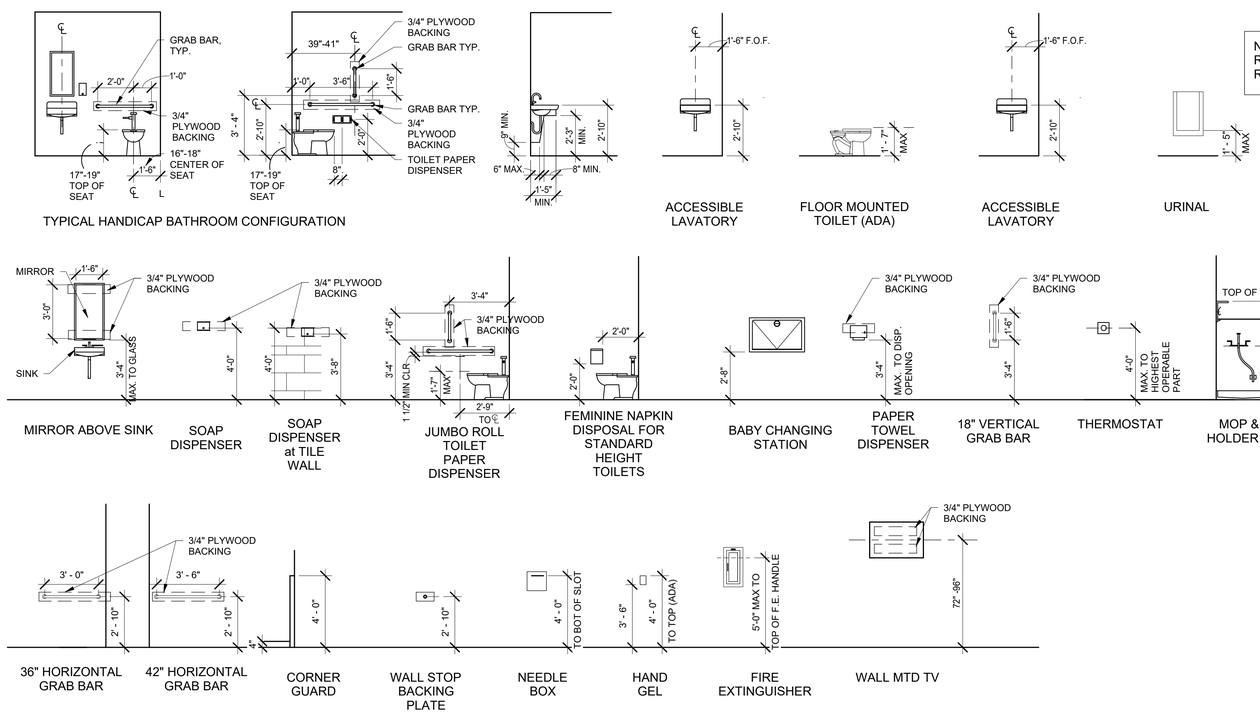

NOTE:
REFER TO PLUMBING FIXTURE TABLE FOR SPECIFIED RESTROOM FIXTURES.

A1 MOUNTING HEIGHTS
1/4" = 1'-0"

JSRa
JOHNSON SMITTHIPONG & ROSAMOND ASSOCIATES, INC.
5210 E Williams Cir • Ste 600 • Tucson, AZ 85711
(520) 547-7904 • www.jsrarchinc.com

Consultants:

REGISTERED ARCHITECT CERTIFICATE NO. 9793 VERNON ROSAMOND Date Signed 11/3/22 ARIZONA, U.S.A.

WHITERIVER ADMINISTRATION OFFICE BUILDING

200 W HOSPITAL DR
WHITERIVER, AZ 85941

HHSI1022018800007I

U. S. DEPARTMENT OF HEALTH AND HUMAN SERVICES
INDIAN HEALTH SERVICE
PHOENIX AREA OFFICE

No.	Date	Description

Issue Date:	11/3/2022
Project No:	21-020
Scale:	As indicated
Drawn By:	SP
Checked By:	BD

FINAL CD

Sheet Title:

WALL TYPES & MOUNTING HEIGHTS

Sheet Number:

A001

Autodesk Docs://21-020 Whiteriver Admin v2022/21-020 06 Arch WR Admin 2022.rvt
11/3/2022 2:36:08 PM

GENERAL NOTES

A	REFER TO CIVIL DEMOLITION DRWGS.

KEYNOTES

Key #	Keynote Text
02 01	EXISTING PARKING LOT.
02 02	EXISTING QM BUILDING TO BE RELOCATED, SEE A1/A102.
02 03	EXISTING HR TO BE REMOVED AND DEMOLISHED.
02 04	EXISTING TRAINING CENTER TO BE REMOVED AND DEMOLISHED.
02 05	EXISTING PRC TO BE REMOVED AND DEMOLISHED.
02 06	EXISTING ABANDONED UNIT TO BE REMOVED AND DEMOLISHED.
02 07	EXISTING DROP OFF LANE.
02 08	EXISTING ADA PARKING.
02 09	EXISTING DIRT ROAD.
02 10	NEED UTILITY HOOKUP.
02 11	EXISTING FIRE HYDRANT, REFERENCE CIVIL.

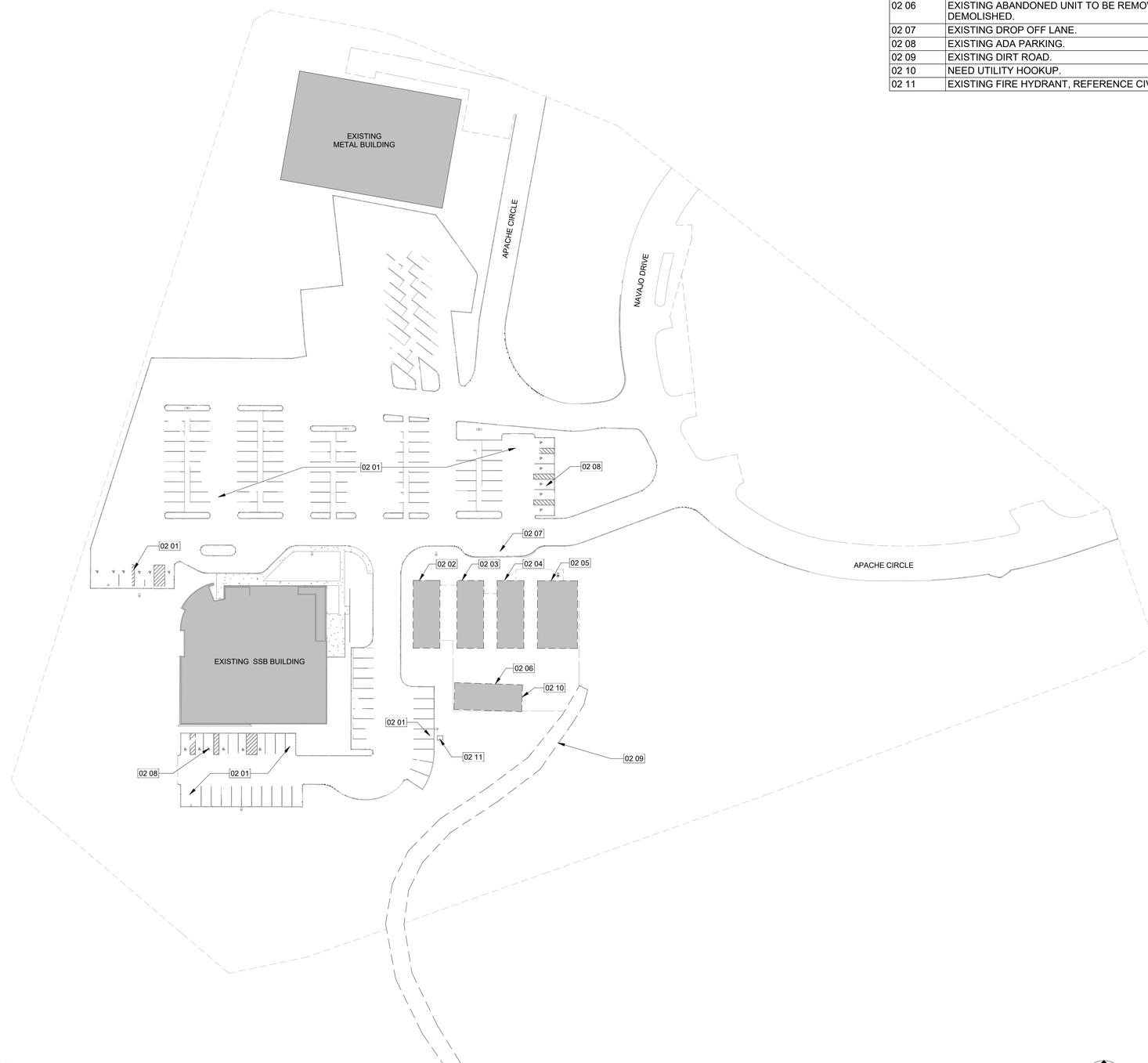

A1 REFERENCE SITE PLAN - EXISTING
1" = 50'-0"

JSRa
JOHNSON SMITTHIPONG & ROSAMOND ASSOCIATES, INC.
5210 E Williams Cir • Ste 600 • Tucson, AZ 85711
(520) 547-7904 • www.jsrarchinc.com

Consultants:

REGISTERED ARCHITECT
CERTIFICATE NO
9793
VERNON
ROSAMOND
Date Signed 11/3/22
ARIZONA, U.S.A.

WHITERIVER ADMINISTRATION OFFICE BUILDING

200 W HOSPITAL DR
WHITERIVER, AZ 85941

HHSI102201800007I

U. S. DEPARTMENT OF HEALTH AND HUMAN SERVICES
INDIAN HEALTH SERVICE
PHOENIX AREA OFFICE

No.	Date	Description

Issue Date:	11/3/2022
Project No:	21-020
Scale:	1" = 50'-0"
Drawn By:	SY
Checked By:	BD

FINAL CD

Sheet Title:

SITE PLAN EXISTING

Sheet Number:

A101

Autodesk Docs://21-020 Whiteriver Admin v2022/21-020 06 Arch WR Admin 2022.rvt
11/3/2022 2:36:13 PM

GENERAL NOTES

A	VERIFY ALL UTILITY LOCATIONS AND STUBS PRIOR TO EXCAVATION.

KEYNOTES

Key #	Keynote Text
02 09	EXISTING DIRT ROAD.
03 21	CAST IN PLACE CONCRETE STAIR, REF CIVIL.
04 03	SITE WALL - ADHERED STONE MASONRY VENEER ON CMU WITH WEEPS AT 32" O.C.
32 02	NEW CONCRETE SIDEWALK.
32 03	NEW FDC LOCATION WITH BOLLARDS.
32 04	NEW FIRETRUCK ACCESS LANE, REF CIVIL.
32 05	PERMANENT LOCATION FOR RELOCATED QM TRAILER. REFER TO SHEET S203 FOR QM TRAILER FOUNDATION PLAN.
32 06	EXISTING PATIENT DROP-OFF.
32 15	FREE STANDING SIGNAGE, FOR DETAIL SEE THIS SHEET.

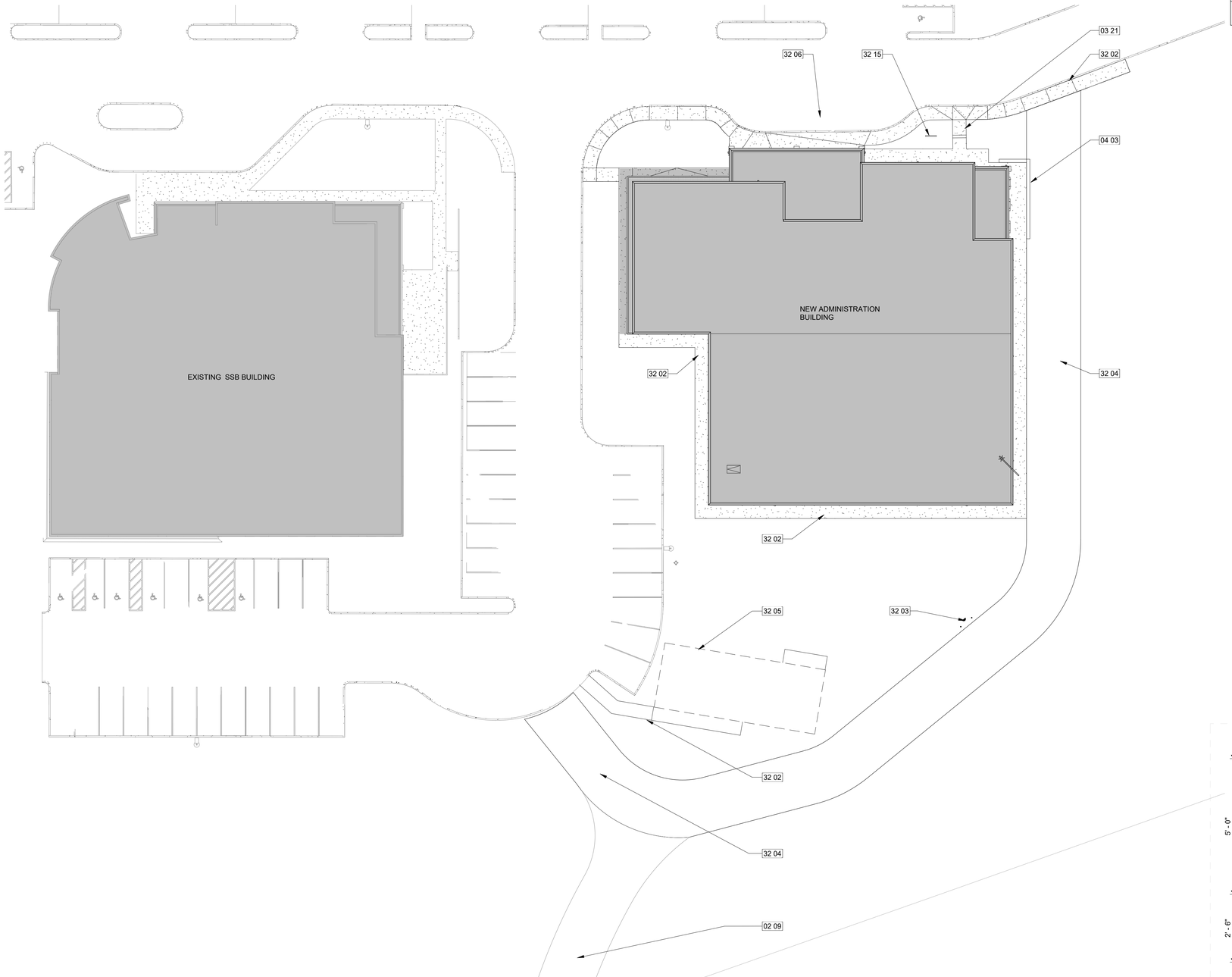

A1 REFERENCE SITE PLAN - NEW
1" = 20'-0"

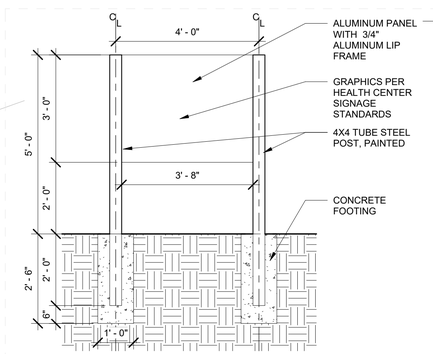

A5 BUILDING SIGNAGE
1/2" = 1'-0"

JSRa
JOHNSON SMITTHIPONG & ROSAMOND ASSOCIATES, INC.
5210 E Williams Cir • Ste 600 • Tucson, AZ 85711
(520) 547-7904 • www.jsrarchinc.com

Consultants:

REGISTERED ARCHITECT
CERTIFICATE NO
9793
VERNON ROSAMOND
Date Signed 11/3/22
ARIZONA, U.S.A.

WHITERIVER ADMINISTRATION OFFICE BUILDING

200 W HOSPITAL DR
WHITERIVER, AZ 85941

HHSI1022018800007I

U. S. DEPARTMENT OF HEALTH AND HUMAN SERVICES
INDIAN HEALTH SERVICE
PHOENIX AREA OFFICE

No.	Date	Description

Issue Date:	11/3/2022
Project No:	21-020
Scale:	As indicated
Drawn By:	SY
Checked By:	BD

FINAL CD

Sheet Title:

REFERENCE SITE PLAN NEW

Sheet Number:

A102

Autodesk Docs://21-020 Whiteriver Admin v2022/21-020 06 Arch WR Admin 2022.rvt
11/3/2022 2:36:17 PM

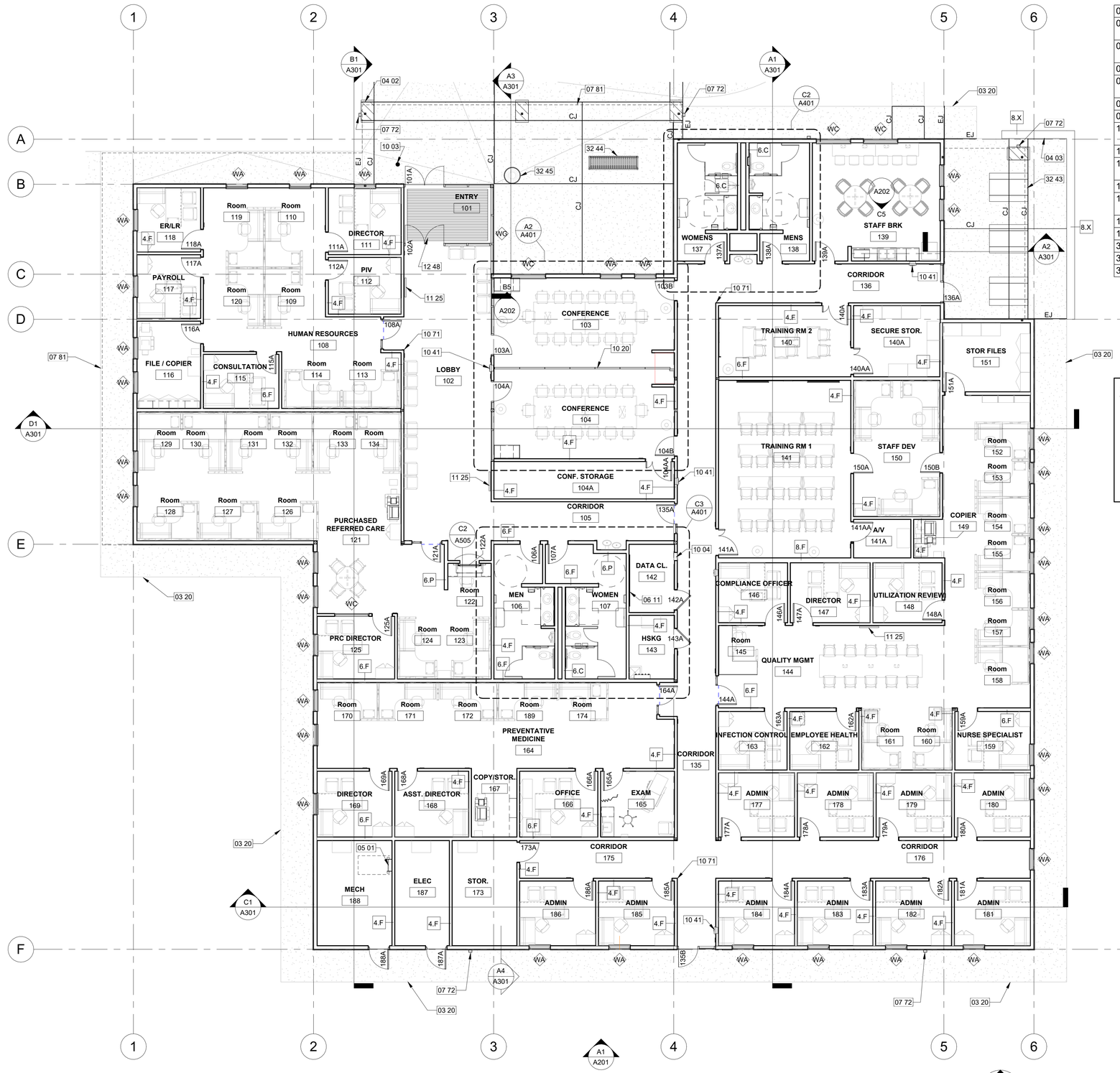

A1 FLOOR PLAN
1/8" = 1'-0"

KEYNOTES

Key #	Keynote Text
03 20	CONCRETE SIDEWALK, REF CIVIL.
04 02	COLUMN - ADHERED STONE MASONRY VENEER ON FRAMED STRUCTURE, REF A2/A501.
04 03	SITE WALL - ADHERED STONE MASONRY VENEER ON CMU WITH WEEPS AT 32" O.C.
05 01	METAL ACCESS LADDER, REF B2/A501.
06 11	4x PLYWOOD SHEATHING BACK BOARD FOR TELE./COMM EQUIPMENT.
07 72	4" SQUARE DOWNSPOUT - REF DETAIL B5/A501.
07 81	METAL CANOPY AT BUILDING ENTRANCE.
10 03	PEDESTAL FOR ADA PUSH BUTTON AND CARD READER PAD.
10 04	AED (AUTOMATED EXTERNAL DEFIBRILLATOR).
10 20	FOLDING WALL PARTITION - MANUALLY OPERATED, REFERENCE STRUCTURAL.
10 41	SEMI-RECESSED FIRE EXTINGUISHER CABINET.
10 71	HIGH IMPACT CORNER GUARD. INSTALL DIRECTLY ABOVE BASE, REF B2/A502.
11 25	WALL MOUNTED FLAT SCREEN TV BRACKET.
12 48	RECESSED FLOOR GRILLE, REF A4/A502.
32 43	PICNIC TABLE.
32 44	BENCH.
32 45	TRASH CAN.

GENERAL NOTES:

A. REFER TO CIVIL, MECHANICAL, PLUMBING AND ELECTRICAL FOR ADDITIONAL INFORMATION.

B. CONCRETE CONTROL JOINTS (C.J.) SHALL BE SPACED BETWEEN 4'-0" & 6'-0" O.C. EXPANSION JOINTS (E.J) SHALL BE SPACED BETWEEN 40'-0" & 100'-0". THE GENERAL CONTRACTOR SHALL SUBMIT THE PROPOSED LOCATIONS OF CONSTRUCTION JOINTS TO THE STRUCTURAL OR ENGINEER FOR ACCEPTANCE BEFORE STARTING CONSTRUCTION.

JSRa
JOHNSON SMITTHIPONG & ROSAMOND ASSOCIATES, INC.
5210 E Williams Cir • Ste 600 • Tucson, AZ 85711
(520) 547-7904 • www.jsrarchinc.com

Consultants:

REGISTERED ARCHITECT CERTIFICATE NO 9793 VERNON ROSAMOND Date Signed 11/3/22 ARIZONA, U.S.A.

WHITERIVER ADMINISTRATION OFFICE BUILDING

200 W HOSPITAL DR
WHITERIVER, AZ 85941

HHSI1022018800007I

U. S. DEPARTMENT OF HEALTH AND HUMAN SERVICES
INDIAN HEALTH SERVICE
PHOENIX AREA OFFICE

No.	Date	Description

Issue Date:	11/3/2022
Project No:	21-020
Scale:	1/8" = 1'-0"
Drawn By:	BD
Checked By:	BD

FINAL CD

Sheet Title:

FLOOR PLAN

Sheet Number:

A121

Autodesk Docs://21-020 Whiteriver Admin v2022/21-020 06 Arch WR Admin 2022.rvt
11/3/2022 2:36:19 PM

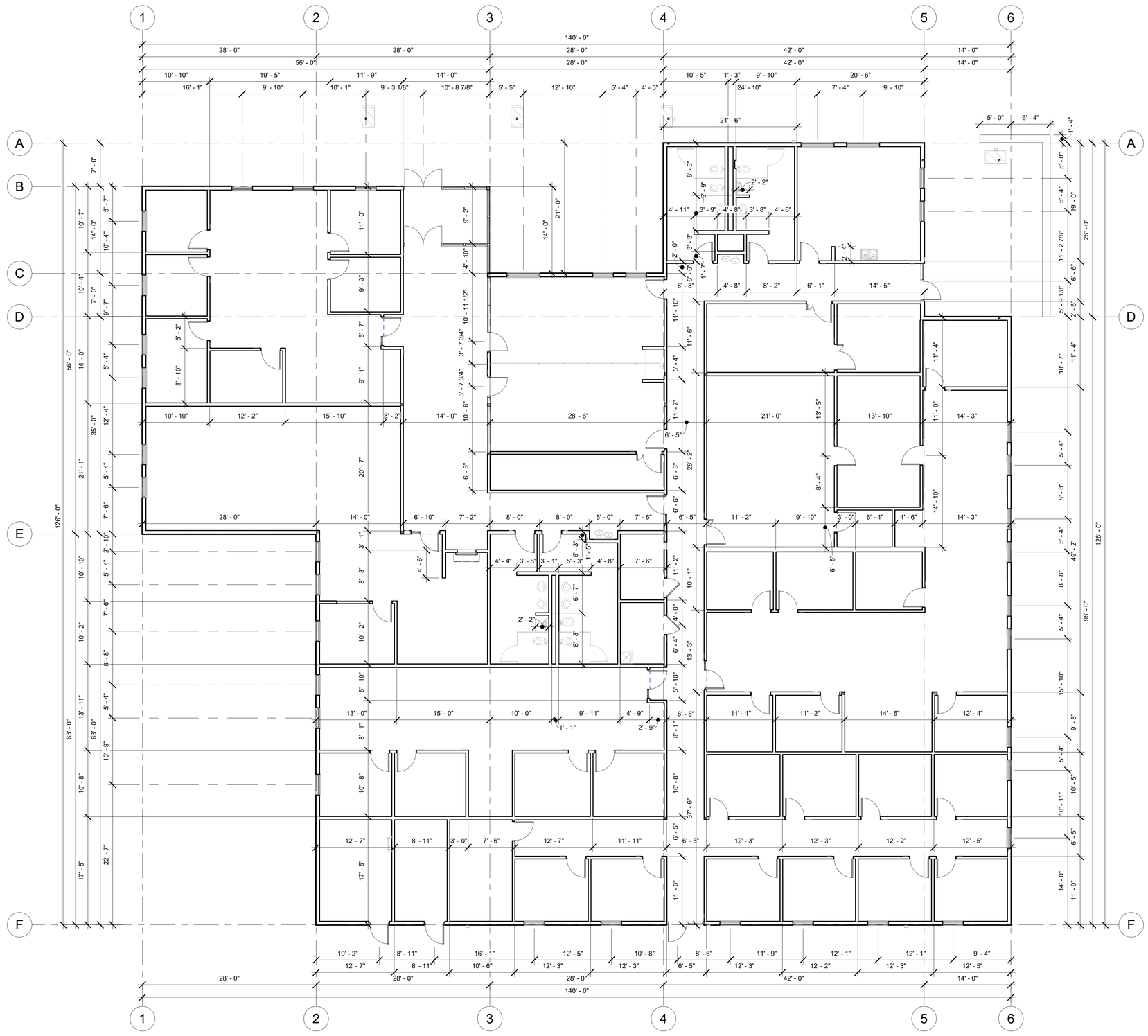

A1 DIMENSION FLOOR PLAN
1/8" = 1'-0"

JSRa
JOHNSON SMITTHIPONG & ROSAMOND ASSOCIATES, INC.
5210 E Williams Cir • Ste 600 • Tucson, AZ 85711
(520) 547-7904 • www.jsrarchinc.com

Consultants:

REGISTERED ARCHITECT
CERTIFICATE NO. 9793
VERNON ROSAMOND
Date Signed 11/3/22
ARIZONA, U.S.A.

WHITERIVER ADMINISTRATION OFFICE BUILDING

200 W HOSPITAL DR
WHITERIVER, AZ 85941

HHSI102201800007I

U. S. DEPARTMENT OF HEALTH AND HUMAN SERVICES
INDIAN HEALTH SERVICE
PHOENIX AREA OFFICE

No.	Date	Description

Issue Date:	11/3/2022
Project No:	21-020
Scale:	1/8" = 1'-0"
Drawn By:	SP
Checked By:	BD

FINAL CD

Sheet Title:

DIMENSION PLAN

Sheet Number:

A131

Autodesk Docs://21-020 Whiteriver Admin v2022/21-020 06 Arch WR Admin 2022.rvt
11/3/2022 2:36:20 PM

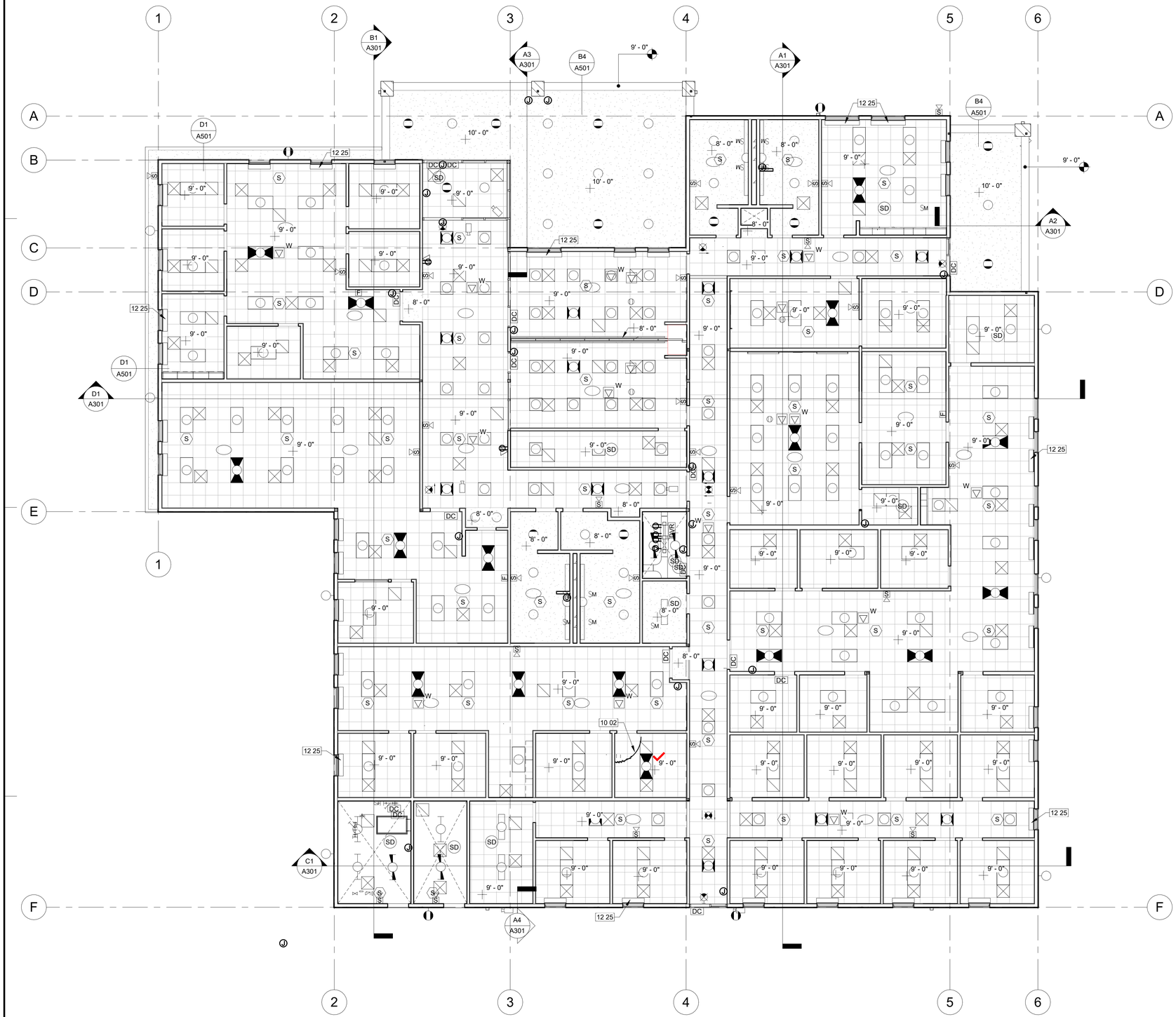

A1 REFLECTED CEILING PLAN
1/8" = 1'-0"

GENERAL NOTES

A	REFER TO SHEET E121, LIGHTING PLAN

KEYNOTES

Key #	Keynote Text
10 02	CURTAIN WITH CURTAIN TRACK, REFER TO B1 THIS SHEET.
12 25	ROLLER SHADE, TYPICAL.

RCP LEGEND

- 2x2 ACOUSTICAL CEILING TILE
- LED LIGHT FIXTURE
- EMERGENCY 2x4 LIGHT FIXTURE
- GYPSUM WALL BOARD
- SUPPLY GRILL
- RETURN GRILL
- LED CAN LIGHT FIXTURE
- EMERGENCY CAN LIGHT
- STRIP LED LIGHT FIXTURE
- EMERGENCY STRIP LED LIGHT FIXTURE
- LED CAN WALL MOUNTED LIGHT FIXTURE
- EMERGENCY WALL MOUNTED LED CAN LIGHT FIXTURE, SHADE PATTERN INDICATES EMERGENCY BATTERY
- EMERGENCY EXIT SIGN SURFACE MOUNTED
- EMERGENCY EXIT SIGN WALL MOUNTED
- EMERGENCY EXIT SIGN SURFACE MOUNTED DOUBLE FACED

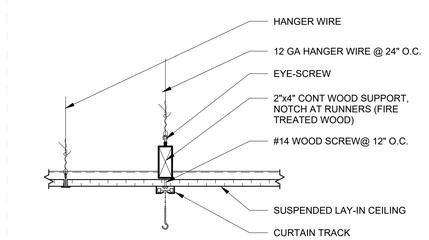

B1 CURTAIN TRACK
1 1/2" = 1'-0"

JOHNSON SMITTHIPONG & ROSAMOND ASSOCIATES, INC.
5210 E Williams Cir • Ste 600 • Tucson, AZ 85711
(520) 547-7904 • www.jsrarchinc.com

Consultants:

REGISTERED ARCHITECT CERTIFICATE NO. 9793 VERNON ROSAMOND Date Signed 11/3/22 ARIZONA, U.S.A.

WHITERIVER ADMINISTRATION OFFICE BUILDING

200 W HOSPITAL DR
WHITERIVER, AZ 85941

HHSI1022018800007I

U. S. DEPARTMENT OF HEALTH AND HUMAN SERVICES
INDIAN HEALTH SERVICE
PHOENIX AREA OFFICE

No.	Date	Description

Issue Date:	11/3/2022
Project No:	21-020
Scale:	As indicated
Drawn By:	SP
Checked By:	BD

FINAL CD

Sheet Title:

REFLECTED CEILING PLAN

Sheet Number:

A141

Autodesk Docs://21-020 Whiteriver Admin v2022/21-020 06 Arch WR Admin 2022.rvt
11/3/2022 2:36:21 PM

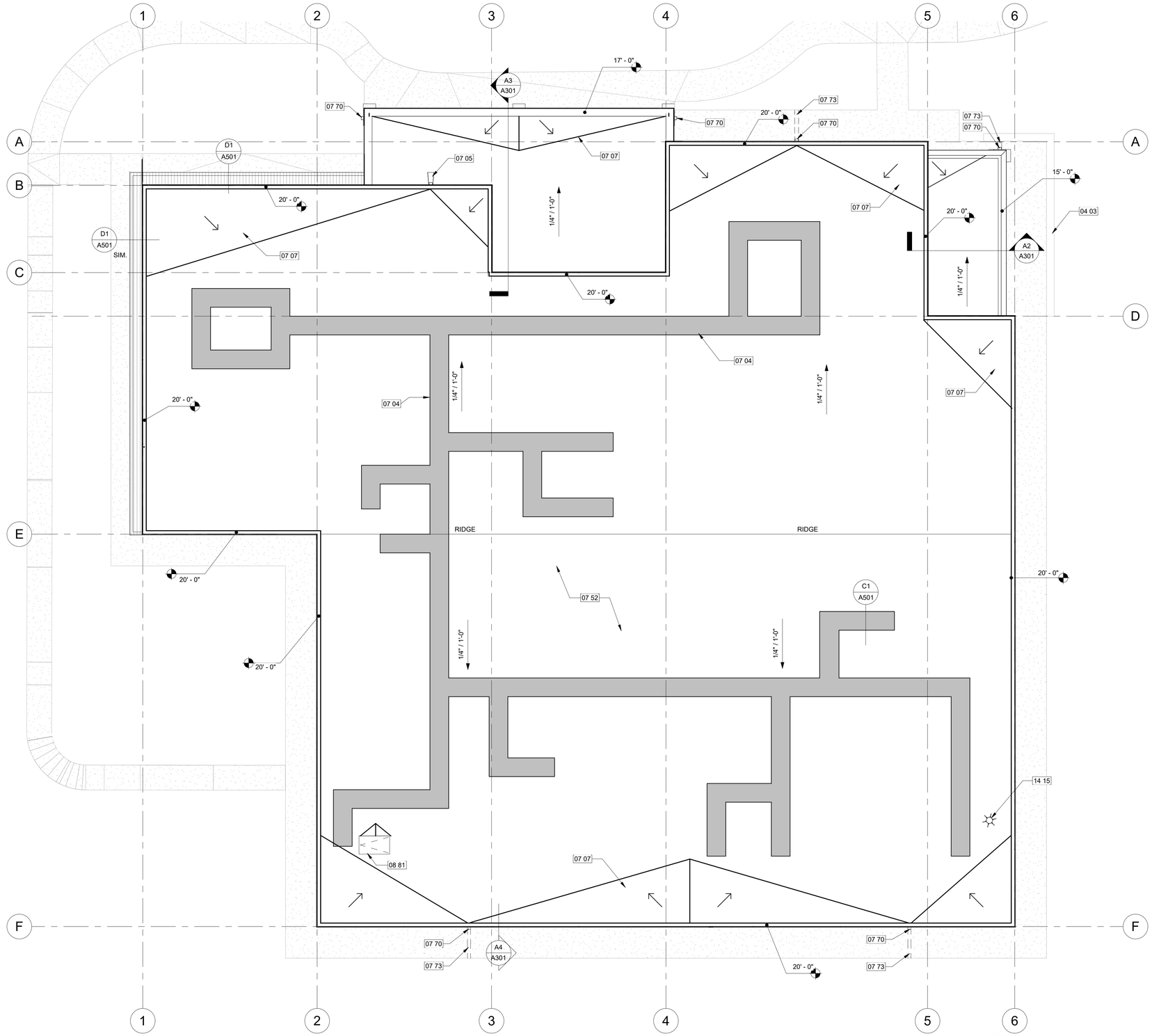

A1 ROOF PLAN
1/8" = 1'-0"

KEYNOTES

Key #	Keynote Text
07 04	ROOF WALKWAY PADS.
07 05	METAL SPLASH PAN.
07 07	ROOF CRICKET - TAPERED INSULATION.
07 52	SINGLE PLY ROOFING MEMBRANE SYSTEM.
07 70	PARAPET SCUPPER WITH SPLASH BLOCK AT GRADE - REF DETAIL D4/A501.
07 73	UNDERGROUND DRAIN - VERIFY INVERT ELEVATION AT CURB FOR PROPER DRAINAGE FROM DOWNSPOUT.
08 81	INSULATED ROOF HATCH, REFERENCE C2/A501.
14 15	JIB CRANE, REFERENCE STRUCTURAL.
23 04	MECHANICAL UNIT - REFERENCE MECHANICAL.

JSRa
JOHNSON SMITTHIPONG & ROSAMOND ASSOCIATES, INC.
5210 E Williams Cir • Ste 600 • Tucson, AZ 85711
(520) 547-7904 • www.jsrarchinc.com

Consultants:

REGISTERED ARCHITECT
CERTIFICATE NO. 9793
VERNON ROSAMOND
Date Signed 11/3/22
ARIZONA, U.S.A.

WHITERIVER ADMINISTRATION OFFICE BUILDING

200 W HOSPITAL DR
WHITERIVER, AZ 85941

HHSI102201800007I

U. S. DEPARTMENT OF HEALTH AND HUMAN SERVICES
INDIAN HEALTH SERVICE
PHOENIX AREA OFFICE

No.	Date	Description

Issue Date:	11/3/2022
Project No:	21-020
Scale:	1/8" = 1'-0"
Drawn By:	SP
Checked By:	BD

FINAL CD

Sheet Title:

ROOF PLAN

Sheet Number:

A151

Autodesk Docs://21-020 Whiteriver Admin v2022/21-020 06 Arch WR Admin 2022.rvt
11/3/2022 2:36:22 PM

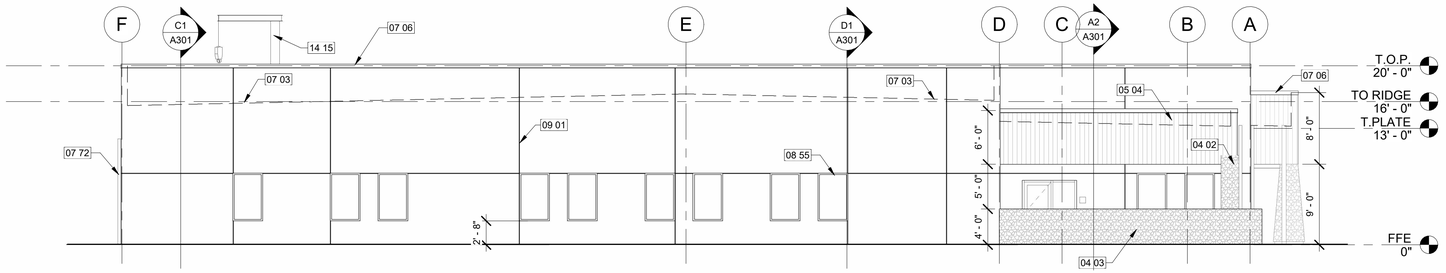

D1 EAST ELEVATION

1/8" = 1'-0"

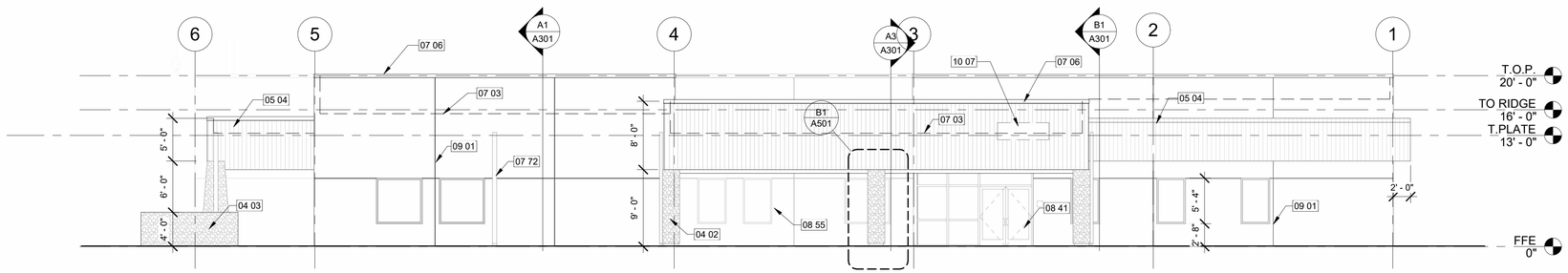

C1 NORTH ELEVATION

1/8" = 1'-0"

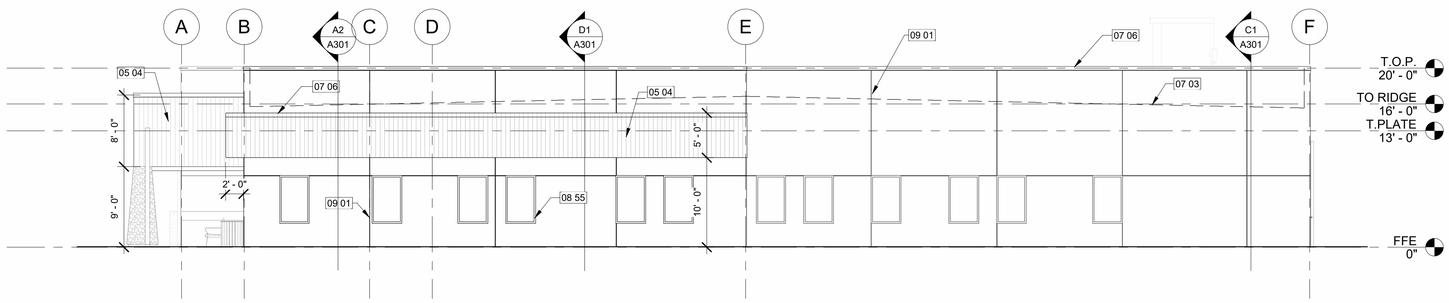

B1 WEST ELEVATION

1/8" = 1'-0"

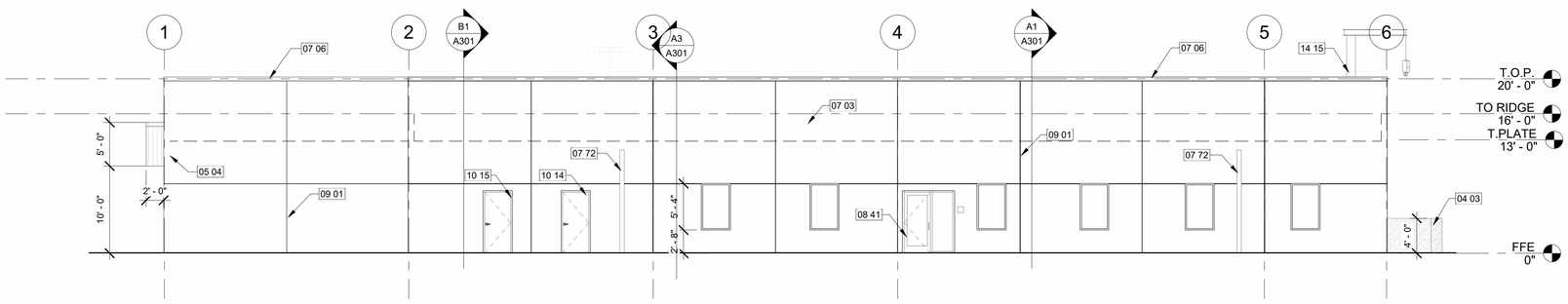

A1 SOUTH ELEVATION

1/8" = 1'-0"

KEYNOTES

Key #	Keynote Text
04 02	COLUMN - ADHERED STONE MASONRY VENEER ON FRAMED STRUCTURE, REF A2/A501.
04 03	SITE WALL - ADHERED STONE MASONRY VENEER ON CMU WITH WEEPS AT 32" O.C.
05 04	STANDING SEAM METAL ROOF - VERTICAL.
07 03	ROOF LINE BEYOND.
07 06	METAL COPING CAP.
07 72	4" SQUARE DOWNSPOUT - REF DETAIL B5/A501.
08 41	ALUMINUM STOREFRONT SYSTEM WITH ENTRY DOOR.
08 55	ALUMINUM WINDOW.
09 01	CONTROL JOINT.
10 07	BUILDING SIGNAGE.
10 14	ELECTRICAL ROOM DOOR TO BE MARKED WITH A PLAINLY VISIBLE SIGN STATING "ELECTRICAL ROOM". REF DETAIL B5/A604.
10 15	MECHANICAL ROOM DOOR TO BE MARKED WITH A PLAINLY VISIBLE SIGN STATING "MECHANICAL ROOM". REF DETAIL C5/A604.
14 15	JIB CRANE, REFERENCE STRUCTURAL.

JSRa
JOHNSON SMITTHIPONG & ROSAMOND ASSOCIATES, INC.
5210 E Williams Cir • Ste 600 • Tucson, AZ 85711
(520) 547-7904 • www.jsrarchinc.com

Consultants:

REGISTERED ARCHITECT CERTIFICATE NO 9793 VERNON ROSAMOND Date Signed 11/3/22 ARIZONA, U.S.A.

WHITERIVER ADMINISTRATION OFFICE BUILDING

200 W HOSPITAL DR
WHITERIVER, AZ 85941

HHSI1022018800007I

U. S. DEPARTMENT OF HEALTH AND HUMAN SERVICES
INDIAN HEALTH SERVICE
PHOENIX AREA OFFICE

No.	Date	Description

Issue Date:	11/3/2022
Project No:	21-020
Scale:	1/8" = 1'-0"
Drawn By:	SY
Checked By:	BD

FINAL CD

Sheet Title:

EXTERIOR ELEVATIONS

Sheet Number:

A201

Autodesk Docs://21-020 Whiteriver Admin v2022/21-020 06 Arch WR Admin 2022.rvt
11/3/2022 2:36:26 PM

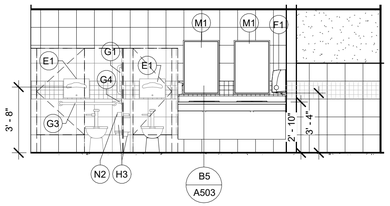

D1 107 WOMENS W
1/4" = 1'-0"

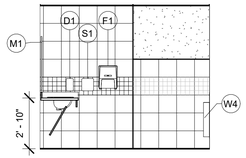

D2 107 WOMENS N
1/4" = 1'-0"

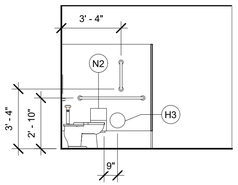

D3 107 WOMENS N (STALL)
1/4" = 1'-0"

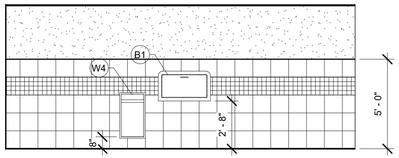

D4 107 WOMENS / 106 MEN (OH)
1/4" = 1'-0"

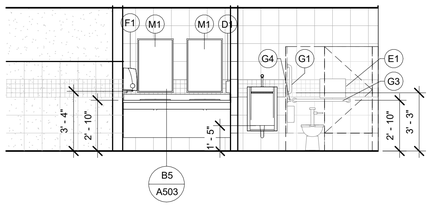

C1 106 MENS E
1/4" = 1'-0"

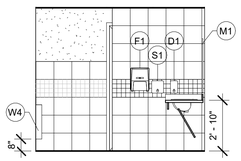

C2 MENS 106 N
1/4" = 1'-0"

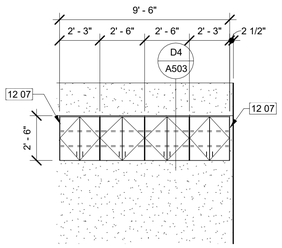

C3 116 COPY S
1/4" = 1'-0"

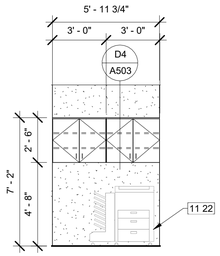

C4 149 COPY W
1/4" = 1'-0"

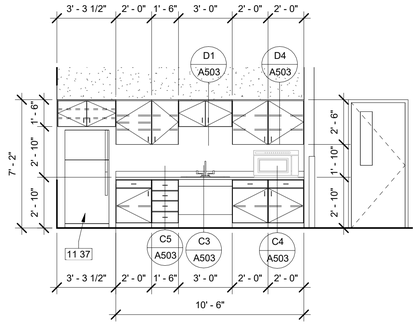

C5 139 STAFF BREAK S
1/4" = 1'-0"

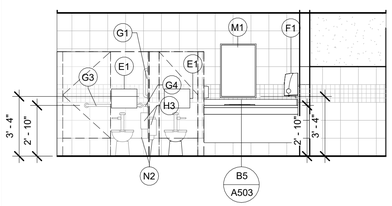

B1 137 WOMENS E
1/4" = 1'-0"

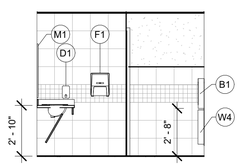

B2 137 WOMENS S
1/4" = 1'-0"

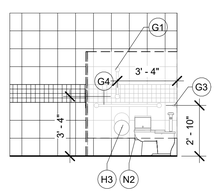

B3 137 WOMENS N
1/4" = 1'-0"

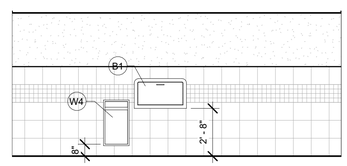

B4 137 WOMENS / 138 MENS (OH)
1/4" = 1'-0"

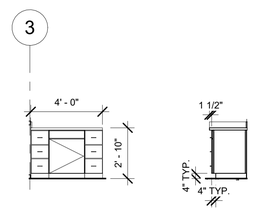

B5 103/104 CONF RM
1/4" = 1'-0"

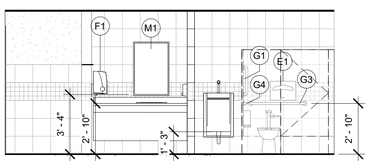

A1 138 MENS W
1/4" = 1'-0"

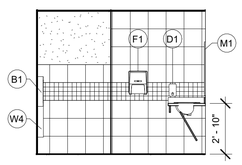

A2 138 MENS S
1/4" = 1'-0"

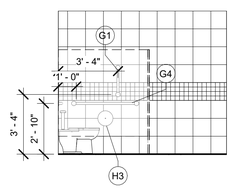

A3 MENS 138 N
1/4" = 1'-0"

KEYNOTES

Key #	Keynote Text
11 22	COPY MACHINE BY OWNER.
11 37	REFRIGERATOR.
12 07	MILLWORK FILLER PANEL.

GENERAL NOTES

A	REFER TO A3/A502 FOR TYPICAL WALL TILE WAINSCOT DETAIL.
B	REFER TO A1/A001 FOR ACCESSIBLE MOUNTING HEIGHTS
C	REFER TO SHEET A401 - ENLARGED PLANS

RESTROOM ACCESSORIES

KEY	ITEM	REMARKS
B1	DIAPER-CHANGING STATION	
D1	DISPENSER SOAP	44" FROM FIN FLOOR TO OPERATING MECHANISM
E1	SEAT COVER DISPENSER	
F1	PAPER TOWEL DISPENSER	OFCI
G1	18" GRAB BAR	
G3	36" GRAB BAR	34" AFF TO CENTER OF GRAB BAR
G4	42" GRAB BAR	34" AFF TO CENTER OF GRAB BAR
H3	TOILET PAPER DISPENSER (JUMBO)	JUMBO ROLL FREE SPINNING
M1	MIRROR 2'x3' FRAMED	40" MAX FROM FIN FLOOR TO REFLECTIVE SURFACE OF MIRROR
N2	FEMININE NAPKIN DISPOSAL	
S1	SHARPS CONTAINER	44" FROM FIN FLOOR
U1	MOP UTILITY SHELF	
W4	RECESSED WASTE RECEPTACLE	

JSRa
JOHNSON SMITTHIPONG & ROSAMOND ASSOCIATES, INC.
5210 E Williams Cir • Ste 600 • Tucson, AZ 85711
(520) 547-7904 • www.jsrarchinc.com

Consultants:

REGISTERED ARCHITECT
CERTIFICATE NO. 9793
VERNON ROSAMOND
Date Signed 11/3/22
ARIZONA, U.S.A.

WHITERIVER ADMINISTRATION OFFICE BUILDING

200 W HOSPITAL DR
WHITERIVER, AZ 85941

HHSI1022018800007I

U. S. DEPARTMENT OF HEALTH AND HUMAN SERVICES
INDIAN HEALTH SERVICE
PHOENIX AREA OFFICE

No.	Date	Description

Issue Date:	11/3/2022
Project No:	21-020
Scale:	1/4" = 1'-0"
Drawn By:	dh
Checked By:	BD

FINAL CD

Sheet Title:

INTERIOR ELEVATIONS

Sheet Number:

A202

Autodesk Docs://21-020 Whiteriver Admin v2022/21-020 06 Arch WR Admin 2022.rvt
11/3/2022 2:36:30 PM

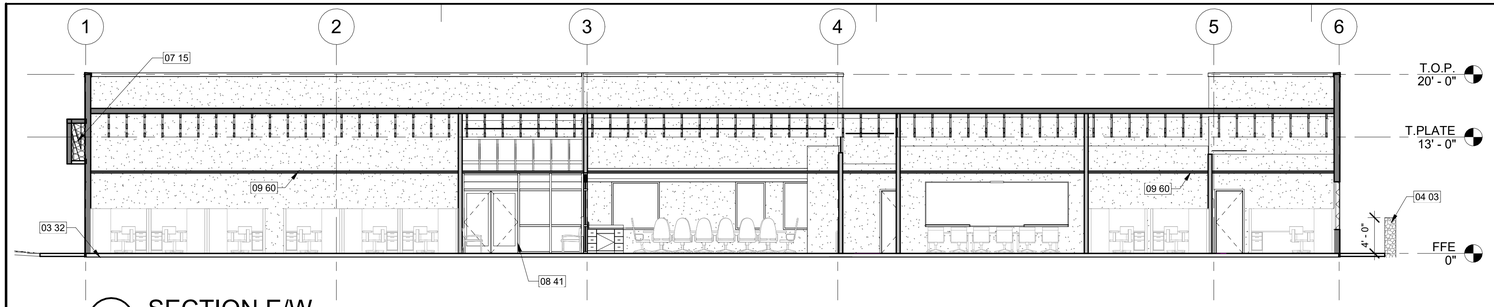

D1 SECTION E/W
1/8" = 1'-0"

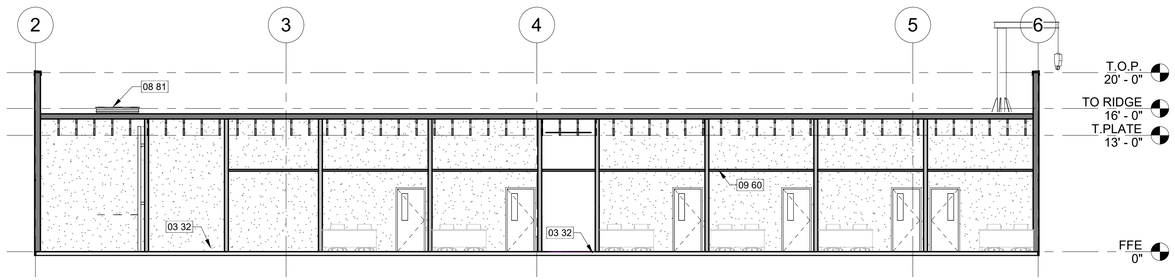

C1 SECTION E/W
1/8" = 1'-0"

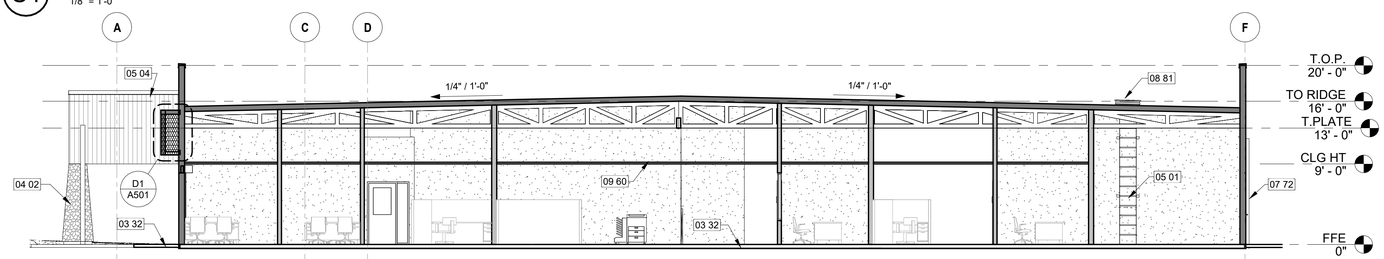

B1 SECTION N/S
1/8" = 1'-0"

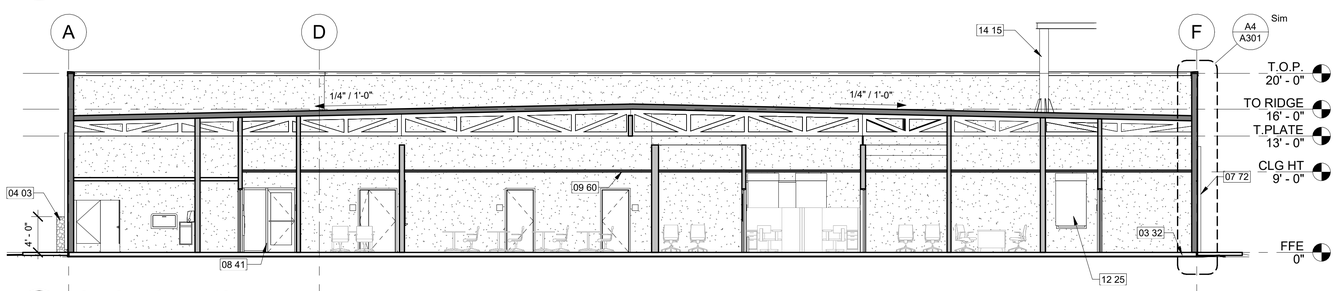

A1 SECTION N/S
1/8" = 1'-0"

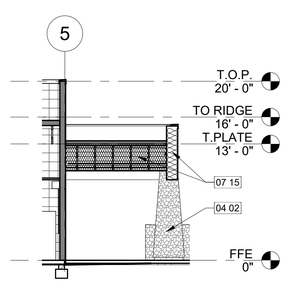

A2 SECTION @ NE CANOPY
1/8" = 1'-0"

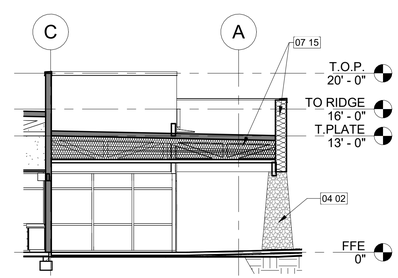

A3 SECTION @ ENTRY CANOPY
1/8" = 1'-0"

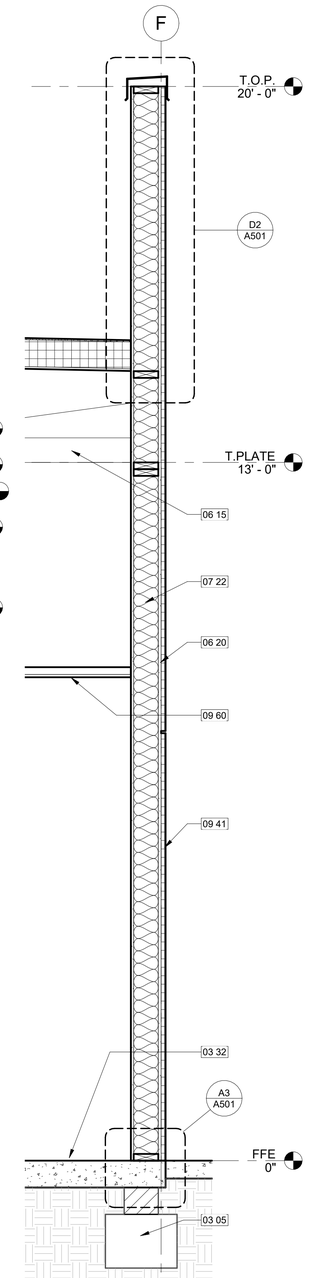

A4 TYP. WALL SECTION
3/4" = 1'-0"

KEYNOTES

Key #	Keynote Text
03 05	CONCRETE FOOTING, REFERENCE STRUCTURAL.
03 32	5" CONCRETE SLAB - REFERENCE STRUCTURAL.
04 02	COLUMN - ADHERED STONE MASONRY VENEER ON FRAMED STRUCTURE, REF A2/A501.
04 03	SITE WALL - ADHERED STONE MASONRY VENEER ON CMU WITH WEEPS AT 32" O.C.
05 01	METAL ACCESS LADDER, REF B2/A501.
05 04	STANDING SEAM METAL ROOF - VERTICAL.
06 15	WOOD TRUSS, REFERENCE STRUCTURAL.
06 20	PLYWOOD SHEATHING.
07 15	MINERAL-WOOL BLANKET INSULATION, PACK INTO STRUCTURAL CAVITY TO FILL ALL VOIDS.
07 22	BATT INSULATION, ATTACH TO STUD TO PREVENT MOVEMENT.
07 72	4" SQUARE DOWNSPOUT - REF DETAIL B5/A501.
08 41	ALUMINUM STOREFRONT SYSTEM WITH ENTRY DOOR.
08 81	INSULATED ROOF HATCH, REFERENCE C2/A501.
09 41	EIFS SYSTEM.
09 60	ACOUSTICAL CEILING TILE.
12 25	ROLLER SHADE, TYPICAL.
14 15	JIB CRANE, REFERENCE STRUCTURAL.

JSRa
JOHNSON SMITTHIPONG & ROSAMOND ASSOCIATES, INC.
5210 E Williams Cir • Ste 600 • Tucson, AZ 85711
(520) 547-7904 • www.jsrarchinc.com

Consultants:

REGISTERED ARCHITECT
CERTIFICATE NO. 9793
VERNON ROSAMOND
Date Signed 11/3/22
ARIZONA, U.S.A.

WHITERIVER ADMINISTRATION OFFICE BUILDING

200 W HOSPITAL DR
WHITERIVER, AZ 85941

HHSI1022018800007I

U. S. DEPARTMENT OF HEALTH AND HUMAN SERVICES
INDIAN HEALTH SERVICE
PHOENIX AREA OFFICE

No.	Date	Description

Issue Date:	11/3/2022
Project No:	21-020
Scale:	As indicated
Drawn By:	SP
Checked By:	BD

FINAL CD

Sheet Title:

BUILDING SECTIONS

Sheet Number:

A301

Autodesk Docs://21-020 Whiteriver Admin v2022/21-020 06 Arch WR Admin 2022.rvt
11/3/2022 2:36:34 PM

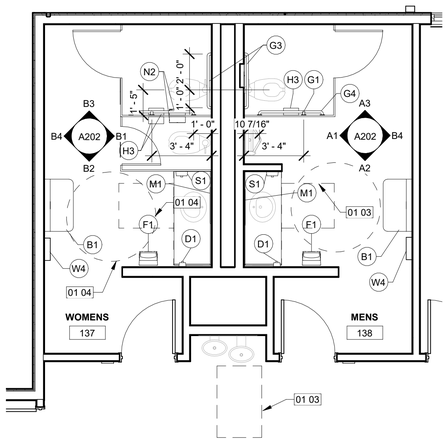

C2 PLAN - RR STAFF
1/4" = 1'-0"

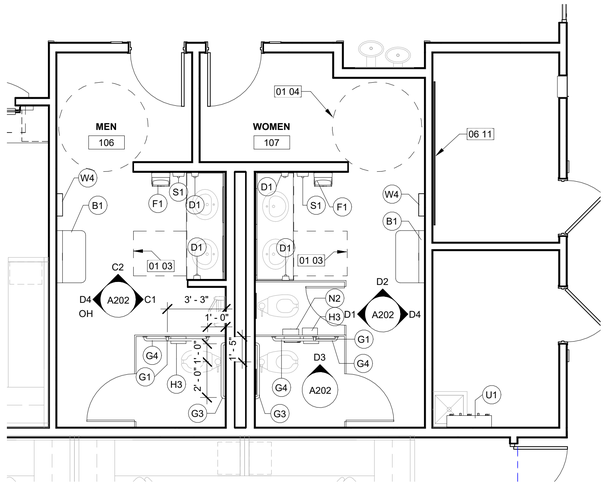

C3 PLAN - RR PUBLIC
1/4" = 1'-0"

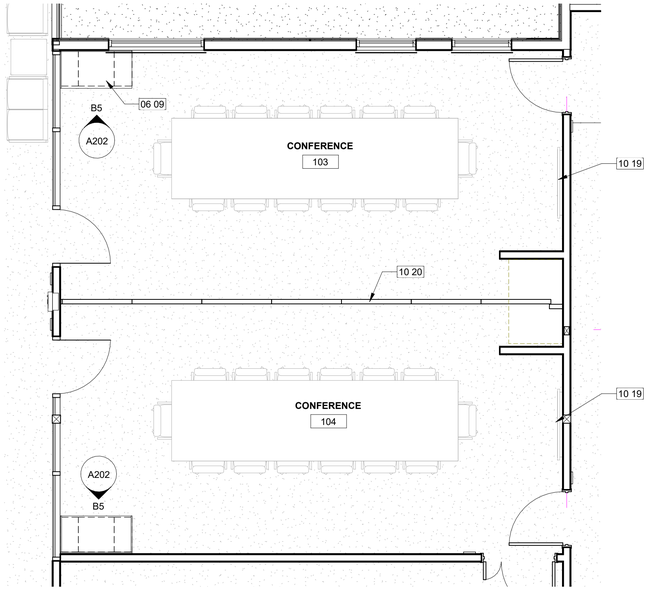

A2 CONFERENCE ROOMS
1/4" = 1'-0"

KEYNOTES	
Key #	Keynote Text
01 03	30"x48" ACCESSIBLE CLEAR FLOOR AREA.
01 04	60" DIA. ACCESSIBLE CLEAR FLOOR TURN AROUND.
06 09	MILLWORK BASE CABINET.
06 11	4x PLYWOOD SHEATHING BACK BOARD FOR TELE./COMM EQUIPMENT.
10 19	PROJECTOR SCREEN.
10 20	FOLDING WALL PARTITION - MANUALLY OPERATED, REFERENCE STRUCTURAL.

GENERAL NOTES	
A	REFER TO SHEET A202 - INTERIOR ELEVATIONS

RESTROOM ACCESSORIES		
KEY	ITEM	REMARKS
B1	DIAPER-CHANGING STATION	
D1	DISPENSER SOAP	44" FROM FIN FLOOR TO OPERATING MECHANISM
E1	SEAT COVER DISPENSER	
F1	PAPER TOWEL DISPENSER	OFCI
G1	18" GRAB BAR	
G3	36" GRAB BAR	34" AFF TO CENTER OF GRAB BAR
G4	42" GRAB BAR	34" AFF TO CENTER OF GRAB BAR
H3	TOILET PAPER DISPENSER (JUMBO)	JUMBO ROLL FREE SPINNING
M1	MIRROR 2'x3' FRAMED	40" MAX FROM FIN FLOOR TO REFLECTIVE SURFACE OF MIRROR
N2	FEMININE NAPKIN DISPOSAL	
S1	SHARPS CONTAINER	44" FROM FIN FLOOR
U1	MOP UTILITY SHELF	
W4	RECESSED WASTE RECEPTACLE	

JOHNSON SMITTHIPONG & ROSAMOND ASSOCIATES, INC.
5210 E Williams Cir • Ste 600 • Tucson, AZ 85711
(520) 547-7904 • www.jsrarchinc.com

Consultants:

REGISTERED ARCHITECT
CERTIFICATE NO
9793
VERNON
ROSAMOND
Date Signed 11/3/22
ARIZONA, U.S.A.

WHITERIVER ADMINISTRATION OFFICE BUILDING

200 W HOSPITAL DR
WHITERIVER, AZ 85941

HHSI1022018800007I

U. S. DEPARTMENT OF HEALTH AND HUMAN SERVICES
INDIAN HEALTH SERVICE
PHOENIX AREA OFFICE

No.	Date	Description

Issue Date:	11/3/2022
Project No:	21-020
Scale:	1/4" = 1'-0"
Drawn By:	SP
Checked By:	BD

FINAL CD

Sheet Title:

ENLARGED PLANS

Sheet Number:

A401

Autodesk Docs://21-020 Whiteriver Admin v2022/21-020 06 Arch WR Admin 2022.rvt
11/3/2022 2:36:35 PM

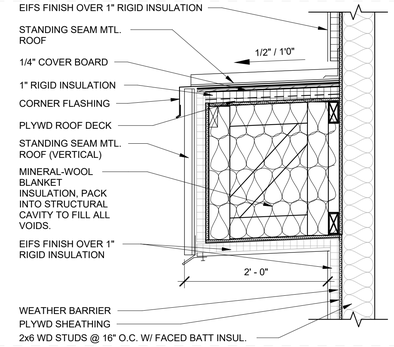

D1 CANOPY FASCIA/SOFFIT S
1" = 1'-0"

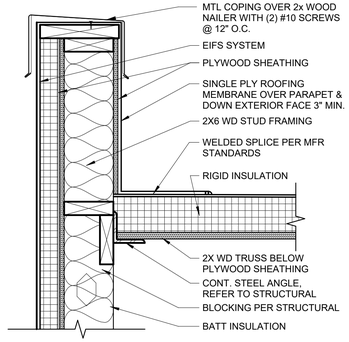

D2 WOOD STUD PARAPET
1 1/2" = 1'-0"

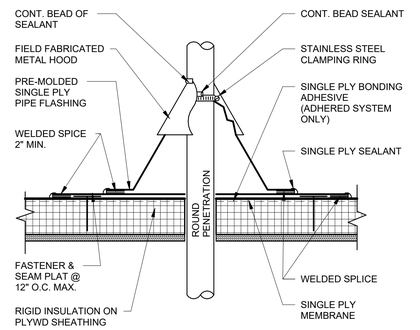

D3 PENETRATION DETAIL
1 1/2" = 1'-0"

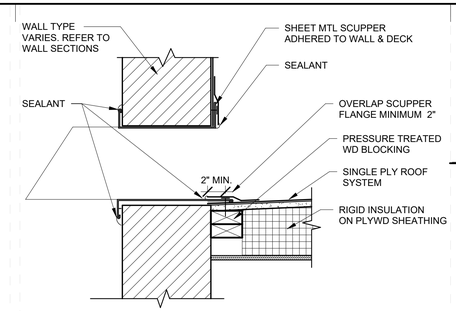

D4 OVERFLOW SCUPPER DETAIL
1 1/2" = 1'-0"

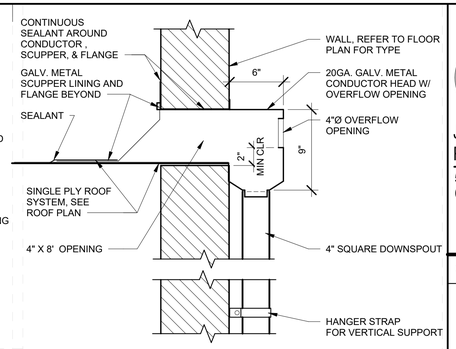

D5 CONDUCTOR HEAD SECTION
1 1/2" = 1'-0"

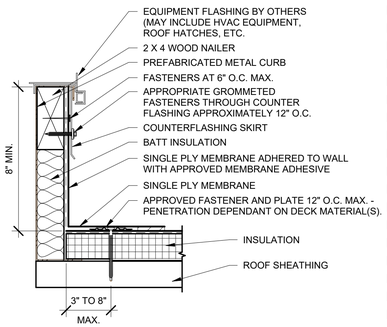

C1 ROOF EQUIP CURB
3" = 1'-0"

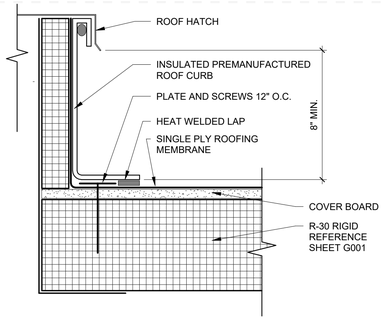

C2 ROOF HATCH CURB
3" = 1'-0"

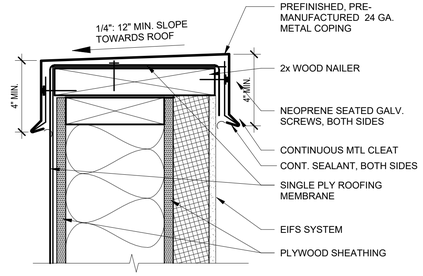

C3 METAL COPING @ PARAPET
3" = 1'-0"

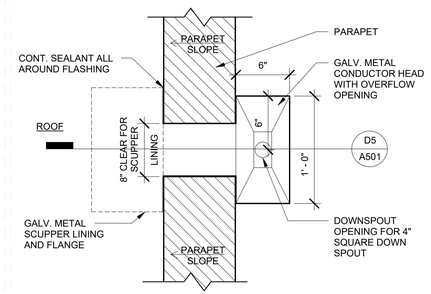

C4 CONDUCTOR HD @ PARAPET
1 1/2" = 1'-0"

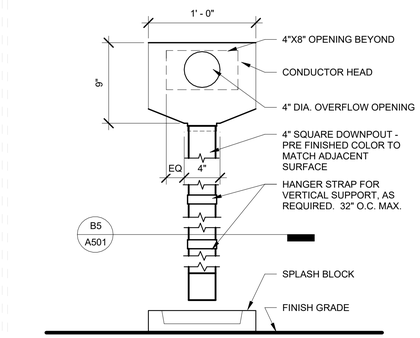

C5 CONDUCTOR HEAD
1 1/2" = 1'-0"

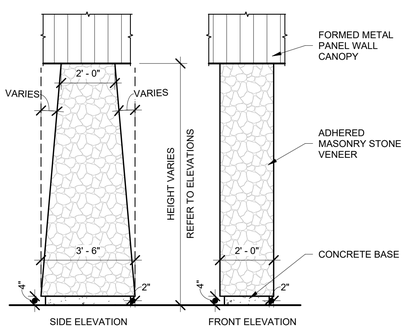

B1 MASONRY COLUMN DETAIL
3/8" = 1'-0"

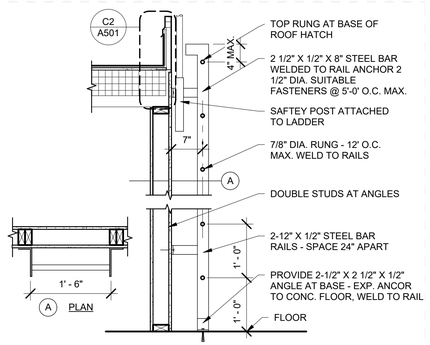

B2 ROOF LADDER
3/4" = 1'-0"

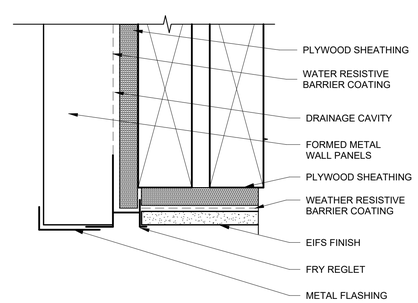

B3 DRIP EDGE DETAIL
6" = 1'-0"

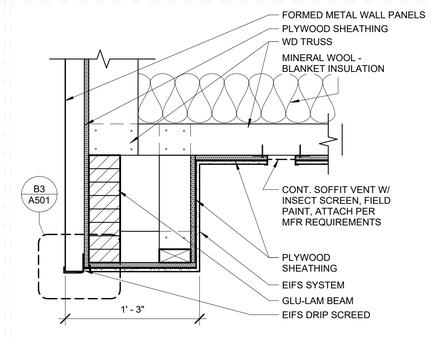

B4 CANOPY SOFFIT VENT
1 1/2" = 1'-0"

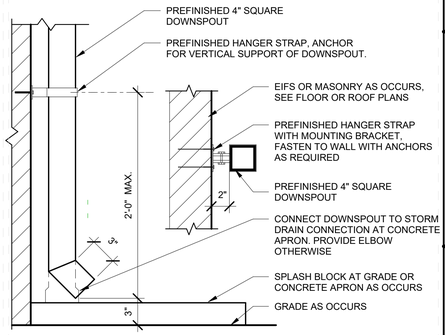

B5 DOWNSPOUT DETAIL
1 1/2" = 1'-0"

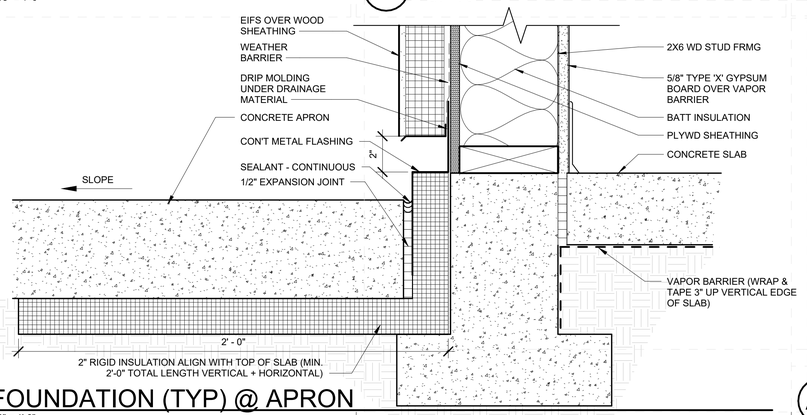

A1 FOUNDATION (TYP) @ APRON
3" = 1'-0"

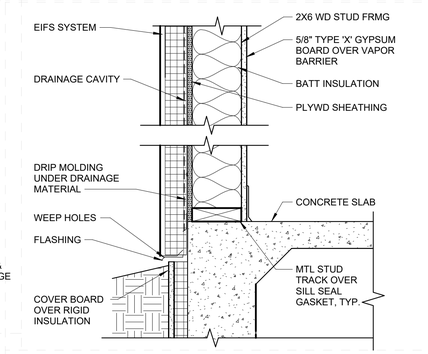

A3 EIFS TERMINATION DETAIL
1 1/2" = 1'-0"

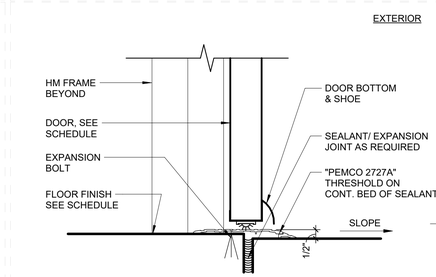

A4 EXTERIOR DR THRESHOLD
3" = 1'-0"

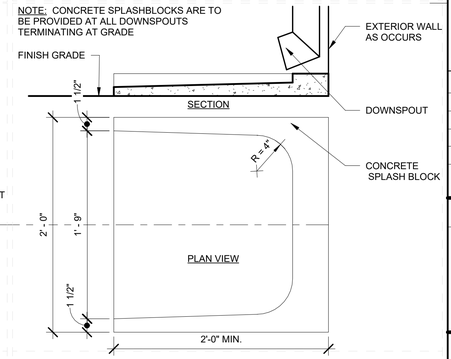

A5 SPLASHBLOCK DETAIL
1 1/2" = 1'-0"

JSRa
JOHNSON SMITTHIPONG & ROSAMOND ASSOCIATES, INC.
5210 E Williams Cir • Ste 600 • Tucson, AZ 85711
(520) 547-7904 • www.jsrarchinc.com

Consultants:

REGISTERED ARCHITECT
CERTIFICATE NO. 9793
VERNON ROSAMOND
Date Signed 11/3/22
ARIZONA, U.S.A.

WHITERIVER ADMINISTRATION OFFICE BUILDING

200 W HOSPITAL DR
WHITERIVER, AZ 85941

HHSI1022018000071

U. S. DEPARTMENT OF HEALTH AND HUMAN SERVICES
INDIAN HEALTH SERVICE
PHOENIX AREA OFFICE

No.	Date	Description

Issue Date:	11/3/2022
Project No:	21-020
Scale:	As indicated
Drawn By:	SP
Checked By:	BD

FINAL CD

Sheet Title:

EXTERIOR DETAILS

Sheet Number:

A501

Autodesk Docs://21-020 Whiteriver Admin v2022/21-020 06 Arch WR Admin 2022.rvt
11/3/2022 2:36:36 PM

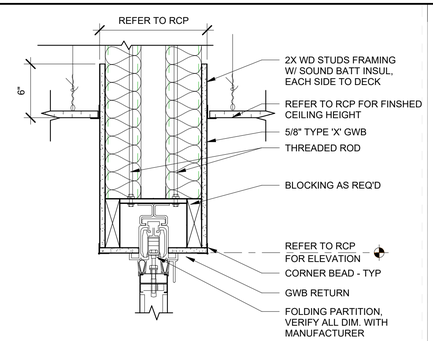

D3 FOLDING PARTITION HEAD
1 1/2" = 1'-0"

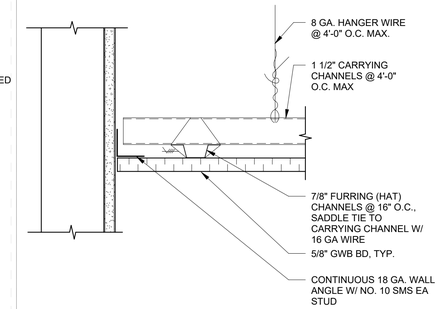

D4 SUSPENDED GWB
3" = 1'-0"

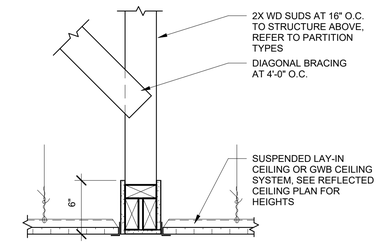

D5 BULKHEAD DETAIL
1 1/2" = 1'-0"

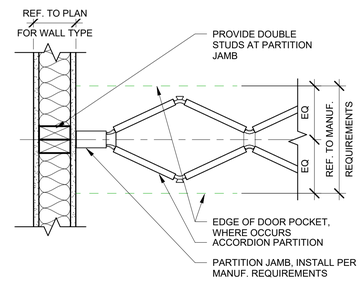

C3 FOLDING PARTITION JAMB
1 1/2" = 1'-0"

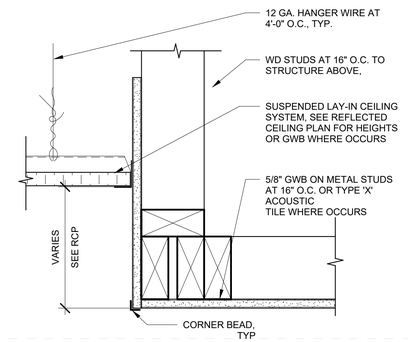

C4 SOFFIT LAY-IN DETAIL
3" = 1'-0"

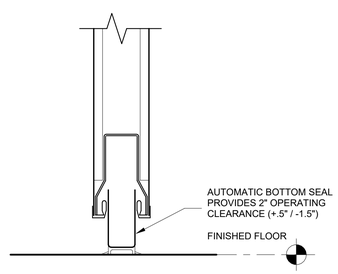

B3 FOLDING PARTITION BASE
3" = 1'-0"

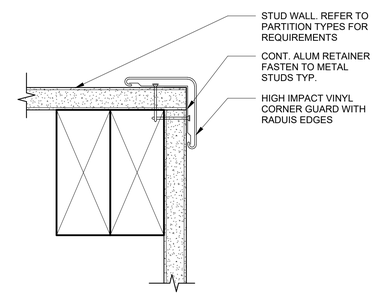

B2 WALL CORNER GUARD
6" = 1'-0"

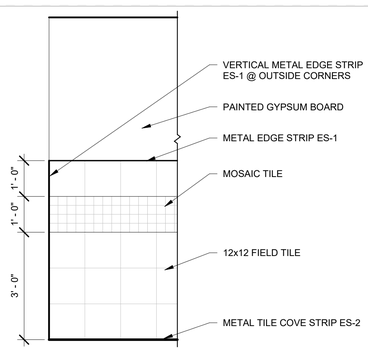

A3 WALL TILE WAINSCOT
1/2" = 1'-0"

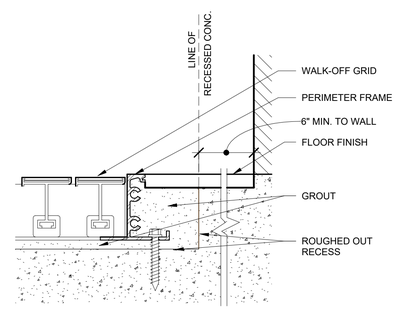

A4 RECESSED FLOOR MAT
6" = 1'-0"

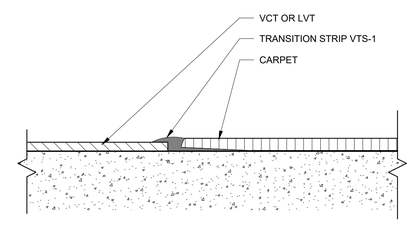

A5 TRANSITION CPT & VCT/LVT
1/2" = 1'-0"

JOHNSON SMITTHIPONG & ROSAMOND ASSOCIATES, INC.
5210 E Williams Cir • Ste 600 • Tucson, AZ 85711
(520) 547-7904 • www.jsrarchinc.com

Consultants:

REGISTERED ARCHITECT
CERTIFICATE NO. 9793
VERNON ROSAMOND
Date Signed 08/03/22
ARIZONA, U.S.A.

WHITERIVER ADMINISTRATION OFFICE BUILDING

200 W HOSPITAL DR
WHITERIVER, AZ 85941

HHSI1022018000071

U. S. DEPARTMENT OF HEALTH AND HUMAN SERVICES
INDIAN HEALTH SERVICE
PHOENIX AREA OFFICE

No.	Date	Description

Issue Date:	11/3/2022
Project No:	21-020
Scale:	As indicated
Drawn By:	SP
Checked By:	BD

FINAL CD

Sheet Title:

INTERIOR DETAILS

Sheet Number:

A502

Autodesk Docs://21-020 Whiteriver Admin v2022/21-020 06 Arch WR Admin 2022.rvt
11/3/2022 2:36:37 PM

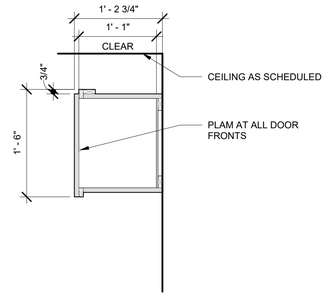

D1 UPPER CABINET (18")
1" = 1'-0"

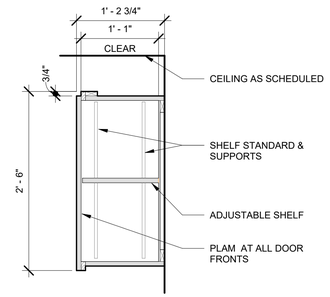

D4 UPPER CAB. W/SHELF (30")
1" = 1'-0"

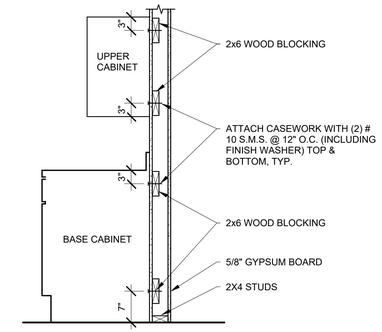

D5 MILLWORK ANCHORAGE
3/4" = 1'-0"

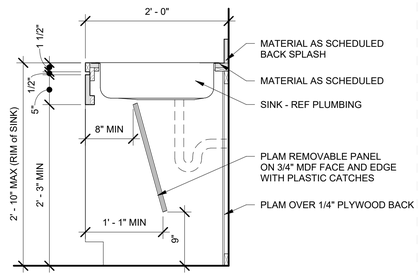

C3 ACCESSIBLE SINK
1" = 1'-0"

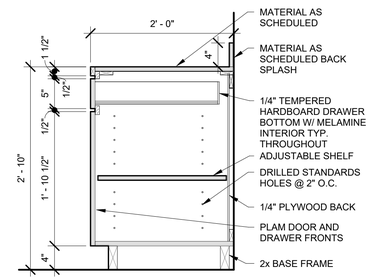

C4 BASE CAB. DRWER/SHELF (34")
1" = 1'-0"

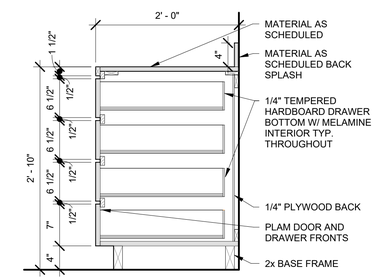

C5 BASE CAB. 4 DRAWER (34")
1" = 1'-0"

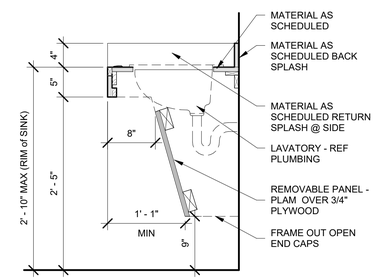

B5 ACCESSIBLE LAVATORY
1" = 1'-0"

JOHNSON SMITTHIPONG & ROSAMOND ASSOCIATES, INC.
5210 E Williams Cir • Ste 600 • Tucson, AZ 85711
(520) 547-7904 • www.jsrarchinc.com

Consultants:

REGISTERED ARCHITECT
CERTIFICATE NO. 9793
VERNON ROSAMOND
Date Signed 11/3/22
ARIZONA, U.S.A.

WHITERIVER ADMINISTRATION OFFICE BUILDING

200 W HOSPITAL DR
WHITERIVER, AZ 85941

HHSI1022018000071

U. S. DEPARTMENT OF HEALTH AND HUMAN SERVICES
INDIAN HEALTH SERVICE
PHOENIX AREA OFFICE

No.	Date	Description

Issue Date:	11/3/2022
Project No:	21-020
Scale:	As indicated
Drawn By:	SP
Checked By:	BD

FINAL CD

Sheet Title:

MILLWORK DETAILS

Sheet Number:

A503

Autodesk Docs://21-020 Whiteriver Admin v2022/21-020 06 Arch WR Admin 2022.rvt
11/3/2022 2:36:38 PM

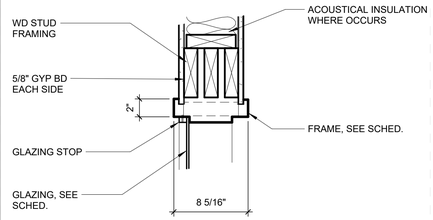

D4 DOOR/GLAZING HD (JAMB SIM)
1 1/2" = 1'-0"

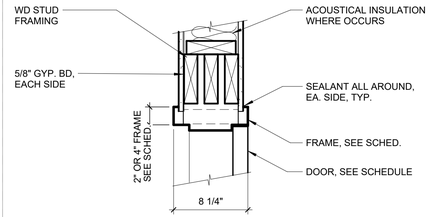

D5 DOOR HEAD AT WOOD STUD
1 1/2" = 1'-0"

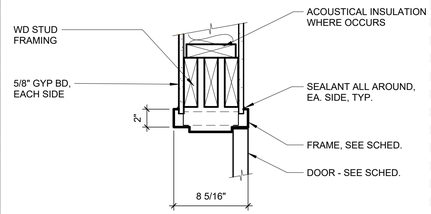

C4 DOOR JAMB AT WOOD STUD
1 1/2" = 1'-0"

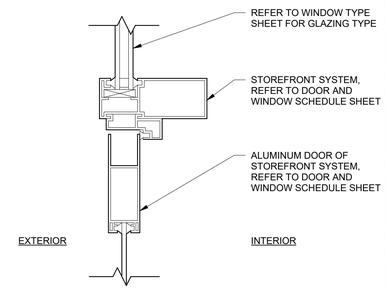

C5 ALUMINUM DOOR HEAD
3" = 1'-0"

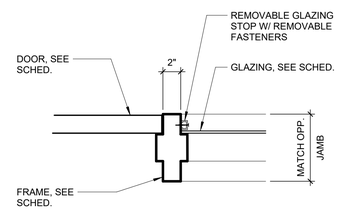

B4 DOOR/GLAZING UNIT JAMB
1 1/2" = 1'-0"

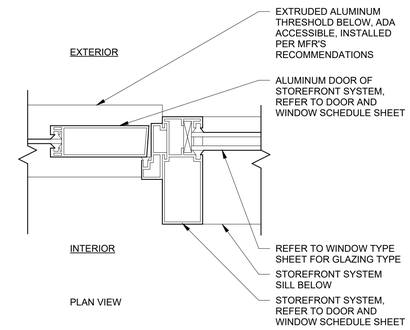

B5 ALUMINUM DOOR JAMB
3" = 1'-0"

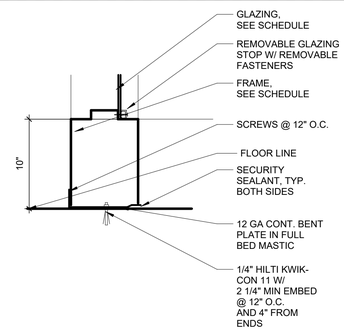

A4 DOOR/GLAZING UNIT SILL
1 1/2" = 1'-0"

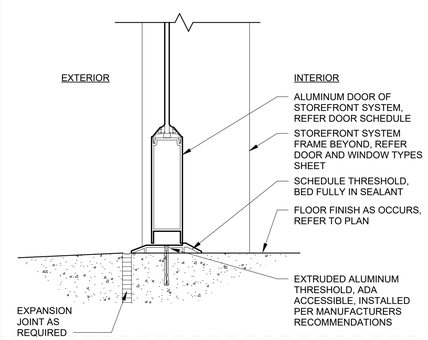

A5 ALUMINUM DR THRESHOLD
3" = 1'-0"

JSRa
JOHNSON SMITTHIPONG & ROSAMOND ASSOCIATES, INC.
5210 E Williams Cir • Ste 600 • Tucson, AZ 85711
(520) 547-7904 • www.jsrarchinc.com

Consultants:

REGISTERED ARCHITECT CERTIFICATE NO 9793 VERNON ROSAMOND Date Signed 11/3/22 ARIZONA, U.S.A.

WHITERIVER ADMINISTRATION OFFICE BUILDING

200 W HOSPITAL DR
WHITERIVER, AZ 85941

HHSI1022018000071

U. S. DEPARTMENT OF HEALTH AND HUMAN SERVICES
INDIAN HEALTH SERVICE
PHOENIX AREA OFFICE

No.	Date	Description

Issue Date:	11/3/2022
Project No:	21-020
Scale:	As indicated
Drawn By:	SP
Checked By:	BD

FINAL CD

Sheet Title:

DOOR DETAILS

Sheet Number:

A504

Autodesk Docs://21-020 Whiteriver Admin v2022/21-020 06 Arch WR Admin 2022.rvt
11/3/2022 2:36:38 PM

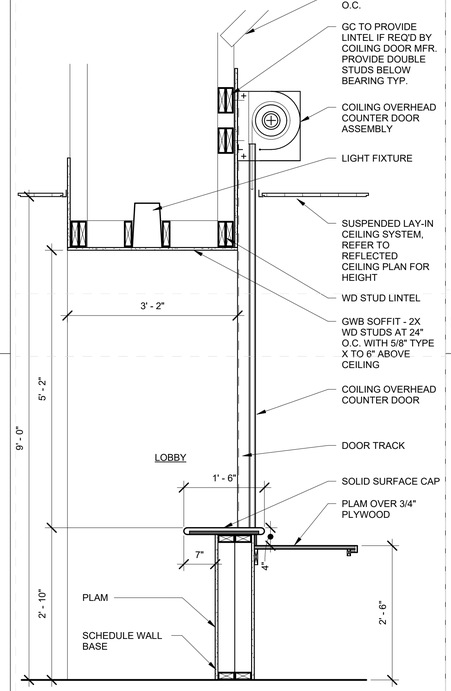

C2 RECEPTION COUNTER TYP.
3/4" = 1'-0"

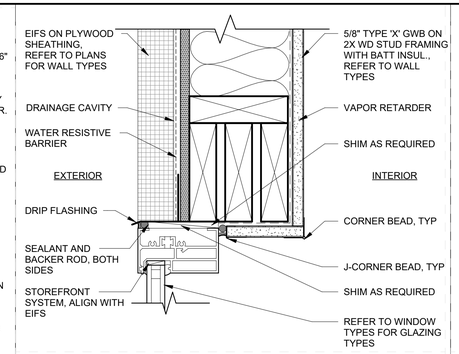

D4 WINDOW HEAD @ EIFS
3" = 1'-0"

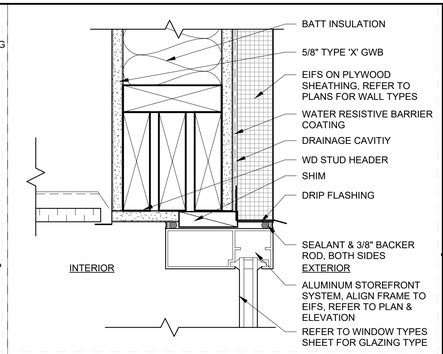

D5 STOREFRONT HEADER
3" = 1'-0"

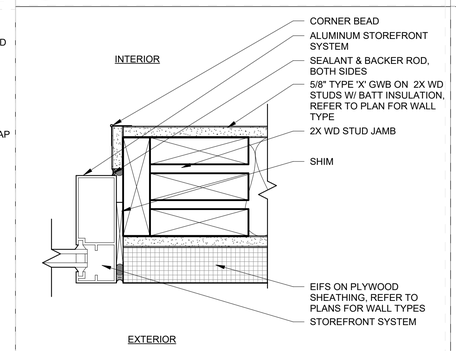

C4 STOREFRONT SYSTEM JAMB
3" = 1'-0"

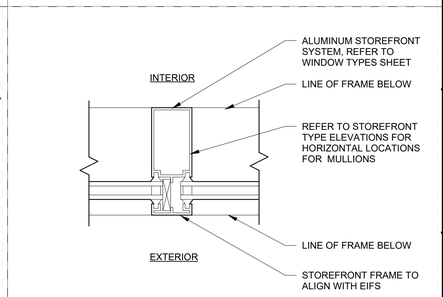

C5 STOREFRONT VERT. MULLION
3" = 1'-0"

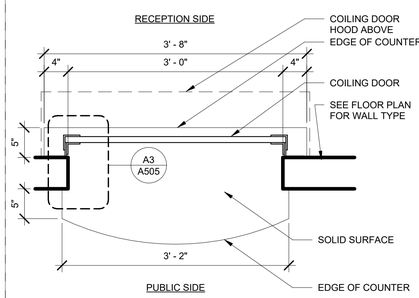

B3 RECEPTION WINDOW PLAN
1" = 1'-0"

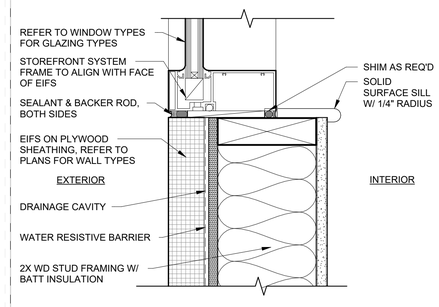

B4 WINDOW SILL @ EIFS
3" = 1'-0"

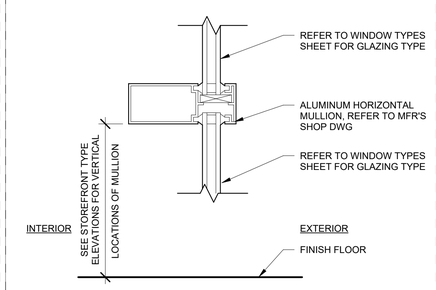

B5 STOREFRONT HORZ. MULLION
3" = 1'-0"

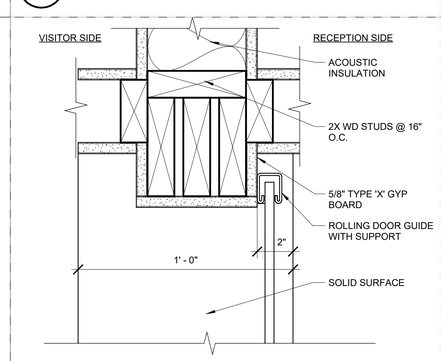

A3 COILING DOOR JAMB
3" = 1'-0"

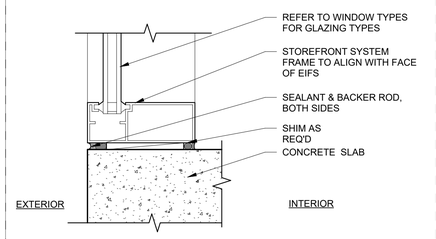

A5 STOREFRONT SILL @ FLOOR
3" = 1'-0"

JSRa
JOHNSON SMITTHIPONG & ROSAMOND ASSOCIATES, INC.
5210 E Williams Cir • Ste 600 • Tucson, AZ 85711
(520) 547-7904 • www.jsrarchinc.com

Consultants:

REGISTERED ARCHITECT CERTIFICATE NO. 9793 VERNON ROSAMOND Date Signed 11/3/22 ARIZONA, U.S.A.

WHITERIVER ADMINISTRATION OFFICE BUILDING

200 W HOSPITAL DR
WHITERIVER, AZ 85941

HHSI1022018800007I

U. S. DEPARTMENT OF HEALTH AND HUMAN SERVICES
INDIAN HEALTH SERVICE
PHOENIX AREA OFFICE

No.	Date	Description

Issue Date:	11/3/2022
Project No:	21-020
Scale:	As indicated
Drawn By:	SP
Checked By:	BD

FINAL CD

Sheet Title:

WINDOW DETAILS

Sheet Number:

A505

Autodesk Docs://21-020 Whiteriver Admin v2022/21-020 06 Arch WR Admin 2022.rvt
11/3/2022 2:36:39 PM

ROOM FINISH SCHEDULE

No.	Room Name	Floor Finish	Base Finish	Wall Finish North	Wall Finish East	Wall Finish South	Wall Finish West	Clg Finish	Remarks
101	ENTRY	LV1	RB1	-	-	-	PT1	AC1	
102	LOBBY	LV1	RB1	-	PT3	PT1	PT1	AC1	ALCOVE PT4 / ESW
103	CONFERENCE	LV1	RB1	PT1	PT3	-	PT1	AC1	
104	CONFERENCE	LV1	RB1	-	PT3	PT3	PT1	AC1	
104A	CONF. STORAGE	LV1	RB1	PT1	PT1	PT1	PT1	AC1	
105	CORRIDOR	LV1	RB1	PT1	PT1	PT3	PT1	AC1	ALCOVE PT4 / ESW
106	MEN	PC2	ES2	PT1	PT1	PT1	PT1	GB1	
107	WOMEN	PC2	ES2	PT1	PT1	PT1	PT1	GB1	
108	HUMAN RESOURCES	CP1	RB1	PT4	PT1	PT3	PT4	AC1	ALCOVE PT3 / ESW
109	Room	CP1	RB1	-	PT1	-	-	AC1	
110	Room	CP1	RB1	PT1	PT1	-	-	AC1	
111	DIRECTOR	CP1	RB1	PT1	PT1	PT1	PT3	AC1	
112	PIV	VC1/VC2	RB1	PT1	PT1	PT1	PT3	AC1	
113	Room	CP1	RB1	PT1	PT1	PT1	-	AC1	
114	Room	CP1	RB1	-	-	PT1	PT1	AC1	
115	CONSULTATION	CP1	RB1	PT1	PT1	PT1	PT3	AC1	
116	FILE / COPIER	VC1/VC2	RB1	PT1	PT1	PT1	PT1	AC1	
117	PAYROLL	CP1	RB1	PT1	PT1	PT1	PT3	AC1	
118	ER/LR	CP1	RB1	PT1	PT1	PT1	PT3	AC1	
119	Room	CP1	RB1	PT1	-	-	PT1	AC1	
120	Room	CP1	RB1	-	-	-	PT1	AC1	
121	PURCHASED REFERRED CARE	CP1	RB1	PT3	PT3	PT1	PT1	AC1	PT3 TO THE DOOR
122	Room	CP1	RB1	PT1	PT1	-	PT1	AC1	
123	Room	CP1	RB1	-	PT1	PT1	-	AC1	
124	Room	CP1	RB1	-	-	PT1	PT1	AC1	
125	PRC DIRECTOR	CP1	RB1	PT1	PT1	PT4	PT1	AC1	
126	Room	CP1	RB1	-	-	-	PT1	AC1	
127	Room	CP1	RB1	-	-	-	PT1	AC1	
128	Room	CP1	RB1	-	-	PT1	PT1	AC1	
129	Room	CP1	RB1	PT1	-	-	PT1	AC1	
130	Room	CP1	RB1	PT1	-	-	-	AC1	
131	Room	CP1	RB1	PT1	-	-	-	AC1	
132	Room	CP1	RB1	PT1	-	-	-	AC1	
133	Room	CP1	RB1	PT1	-	-	-	AC1	
134	Room	CP1	RB1	PT1	PT1	-	-	AC1	
135	CORRIDOR	LV1	RB1	PT1	PT1	PT1	PT3	AC1	
136	CORRIDOR	LV1	RB1	PT4	PT1	PT1	PT1	AC1	
137	WOMENS	PC2	ES2	PT1	PT1	PT1	PT1	GB1	
138	MENS	PC2	ES2	PT1	PT1	PT1	PT1	GB1	
139	STAFF BRK	LV1	RB1	PT3	PT1	PT1	PT4	AC1	
140	TRAINING RM 2	VC1	RB1	PT1	PT1	PT1	PT4	AC1	
140A	SECURE STOR.	VC1	RB1	PT1	PT1	PT1	PT1	AC1	
141	TRAINING RM 1	VC1	RB1	PT1	PT4	PT1	PT1	AC1	
141A	A/V	VC1	RB1	PT1	PT1	PT1	PT1	AC1	
142	DATA CL.	VC1	RB1	PT1	PT1	PT1	PT1	AC1	NO CEILING
143	HSKG	VC1	RB1	PT1	PT1	PT1	PT1	GB1	
144	QUALITY MGMT	LV1	RB1	PT1	PT3	PT4	PT1	AC1	
145	Room	LV1	RB1	PT1	-	-	PT1	AC1	
146	COMPLIANCE OFFICER	CP1	RB1	PT1	PT1	PT1	PT3	AC1	
147	DIRECTOR	CP1	RB1	PT1	PT3	PT1	PT1	AC1	
148	UTILIZATION REVIEW	CP1	RB1	PT1	PT1	PT1	PT3	AC1	
149	COPIER	LV1	RB1	PT1	PT1	PT1	PT1	AC1	
150	STAFF DEV	CP1	RB1	PT1	PT1	PT1	PT1	AC1	
151	STOR FILES	VC1	RB1	PT1	PT1	PT1	PT1	AC1	
152	Room	LV1	RB1	PT1	PT1	-	PT1	AC1	
153	Room	LV1	RB1	-	PT1	-	PT1	AC1	
154	Room	LV1	RB1	-	PT1	-	PT1	AC1	
155	Room	LV1	RB1	-	PT1	-	PT1	AC1	
156	Room	LV1	RB1	-	PT1	-	PT1	AC1	
157	Room	LV1	RB1	-	PT1	-	-	AC1	
158	Room	LV1	RB1	PT1	PT1	PT1	-	AC1	
159	NURSE SPECIALIST	LV1	RB1	PT1	PT3	PT1	PT1	AC1	
160	Room	LV1	RB1	-	PT1	PT1	-	AC1	
161	Room	LV1	RB1	-	-	PT1	PT1		
162	EMPLOYEE HEALTH	CP1	RB1	PT1	PT3	PT1	PT1	AC1	
163	INFECTION CONTROL	CP1	RB1	PT1	PT3	PT1	PT1	AC1	
164	PREVENTATIVE MEDICINE	CP1	RB1	PT1	PT1	PT3	PT1	AC1	
165	EXAM	LV1	RB1	PT1	PT3	PT3	PT1	AC1	
166	OFFICE	CP1	RB1	PT1	PT1	PT3	PT1	AC1	
167	COPY/STOR.	LV1	RB1	PT1	PT4	PT4	PT4	AC1	
168	ASST. DIRECTOR	CP1	RB1	PT1	PT1	PT3	PT1	AC1	
169	DIRECTOR	CP1	RB1	PT1	PT1	PT3	PT1	AC1	
170	Room	CP1	RB1	PT1	-	-	PT1	AC1	
171	Room	CP1	RB1	PT1	-	-	-	AC1	

ROOM FINISH SCHEDULE

No.	Room Name	Floor Finish	Base Finish	Wall Finish North	Wall Finish East	Wall Finish South	Wall Finish West	Clg Finish	Remarks
172	Room	CP1	RB1	PT1	-	-	-	AC1	
173	STOR.	VC1	RB1	PT1	PT1	PT1	PT1	AC1	
174	Room	CP1	RB1	PT1	-	-	-	AC1	
175	CORRIDOR	VC1	RB1	PT3	PT1	PT1	PT1	AC1	
176	CORRIDOR	VC1	RB1	PT1	PT1	PT1	PT1	AC1	
177	ADMIN	CP1	RB1	PT1	PT3	PT1	PT1	AC1	
178	ADMIN	CP1	RB1	PT1	PT3	PT1	PT1	AC1	
179	ADMIN	CP1	RB1	PT1	PT3	PT1	PT1	AC1	
180	ADMIN	CP1	RB1	PT1	PT3	PT1	PT1	AC1	
181	ADMIN	CP1	RB1	PT1	PT3	PT1	PT1	AC1	
182	ADMIN	CP1	RB1	PT1	PT3	PT1	PT1	AC1	
183	ADMIN	CP1	RB1	PT1	PT3	PT1	PT1	AC1	
184	ADMIN	CP1	RB1	PT1	PT3	PT1	PT1	AC1	
185	ADMIN	CP1	RB1	PT1	PT3	PT1	PT1	AC1	
186	ADMIN	CP1	RB1	PT1	PT3	PT1	PT1	AC1	
187	ELEC	SC1	RB1	PT1	PT1	PT1	PT1	-	NO CEILING
188	MECH	SC1	RB1	PT1	PT1	PT1	PT1	-	NO CEILING
189	Room	CP1	RB1	PT1	-	-	-	AC1	

MATERIAL SCHEDULE

REF	DESCRIPTION	MANUFACTURER
BASE		
ES2	METAL EDGE STRIP	REFER TO SPECS SECTION 093013 - CERAMIC TILING
RB1	RUBBER BASE	ROPPE: STYLE: 700 SERIES: COLOR: BURNT UMBER 194; SIZE: 4" HIGH STANDARD TOE
FLOOR		
CP1	CARPET	PHILADELPHIA COMMERCIAL: STYLE: UNIFY 54521; COLOR: 00400-TO SYNTHESIZE; SIZE: 24"x24"
LV1	LUXURY VINYL TILE	MANNINGTON COMMERCIAL; STYLE: NATURE'S PATH; COLOR: WINDSOR OAK-GUNSTOCK 12115; SIZE: 6"x36" PLANK
PC2	PROCELAIN CERAMIC TILE	CROSSVILLE; STYLE: COLOR BLOX EC; COLOR: SANDBOX E1101; SIZE: 12"x12"
PC3	PROCELAIN CERAMIC TILE	CROSSVILLE; STYLE: COLOR BLOX EC; COLOR: I SEE THE MOON E1117; SIZE: 12"x12"
PC4	PROCELAIN CERAMIC TILE	CROSSVILLE: STYLE: COLOR BLOX MOSAICS; COLOR: MR. GREEN JEANS A1112; SIZE: 3"x3" MOSAICS
PC5	PROCELAIN CERAMIC TILE	CROSSVILLE; STYLE: COLOR BLOX MOSAICS; COLOR: BLUE SUEDE SHOES A11153; SIZE: 3"x3" MOSAICS
SC1	SEALED CONCRETE	SCOFIELD; CEMENTONE - CLEAR
VC1	VINYL COMPOSITION TILE	TARKETT VCT; STYLE: VINYL COMPOSITION TILE STANDARD PRICE; COLOR: DARK TAUPE 1365; SIZE:12"x12"
VC2	VINYL COMPOSITION TILE	TARKETT VCT; STYLE: VINYL COMPOSITION TILE STANDARD PRICE; COLOR: HUDSON BLUE 1370; SIZE: 12"x12"
WALL		
PT1	PAINT	DUNN EDWARDS; COLOR: WHITE SAND DEW336
PT2	PAINT	DUNN EDWARDS; COLOR: WEATHERED BROWN DEC756
PT3	PAINT	DUNN EDWARDS; COLOR: LAKEVILLE DE5872
PT4	PAINT	DUNN EDWARDS; COLOR: SADDLE BROWN DE5264
CEILING		
AC1	2x2 ACOUSTICAL LAY-IN	24" x 48" DIVIDED CEILING - REFER TO SPECS SECTION 095113 - ACOUSTICAL PANEL CEILINGS
GB1	GYPSUM BOARD CEILING	SMOOTH TEXTURE - REFER TO SPECS SECTION 092900 - GYPSUM BOARD
MISC		
PL1	PLASTIC LAMINATE	WILSONART; COLOR: RAW CHESTNUT 7975K-12; LOCATION: RECEPTION CASEWORK
PL2	PLASTIC LAMINATE	WILSONART; COLOR: DESERT ZEPHYR 4841-60; LOCATION: BREAK ROOM CASEWORK
PL3	PLASTIC LAMINATE	WILSONART; COLOR: LODEN ZEPHYR 4844-60; LOCATION: EXAM ROOM CASEWORK
SS1	SOLID SURFACE	WILSONART; COLOR: QUARRY MELANGE 9041ML
SS2	SOLID SURFACE	WILSONART; COLOR: GOLD GLITZ 9108CS

JSRa
JOHNSON SMITTHIPONG & ROSAMOND ASSOCIATES, INC.
5210 E Williams Cir • Ste 600 • Tucson, AZ 85711
(520) 547-7904 • www.jsrarchinc.com

Consultants:

REGISTERED ARCHITECT
CERTIFICATE NO. 9793
VERNON ROSAMOND
Date Signed 11/3/22
ARIZONA, U.S.A.

WHITERIVER ADMINISTRATION OFFICE BUILDING

200 W HOSPITAL DR
WHITERIVER, AZ 85941

HHSI1022018800007I

U. S. DEPARTMENT OF HEALTH AND HUMAN SERVICES
INDIAN HEALTH SERVICE
PHOENIX AREA OFFICE

No.	Date	Description

Issue Date:	11/3/2022
Project No:	21-020
Scale:	
Drawn By:	SP
Checked By:	BD

FINAL CD

Sheet Title:

ROOM FINISH SCHEDULES

Sheet Number:

A601

Autodesk Docs://21-020 Whiteriver Admin v2022/21-020 06 Arch WR Admin 2022.rvt
11/3/2022 2:36:39 PM

DOOR SCHEDULE

Mark	HW Set	Door Width	Door Height	Door Thickness	Type	Finish	Frame Type	Frame Material	Access Control	Auto Operator	UL Rating	Comments
101A	1.0	6' - 0"	7' - 0"	1 3/4"	7	AL/GL2T	F	AL/GL2T	CR	AO		
102A	6.0	6' - 0"	7' - 0"	1 3/4"	7	AL/GL1T	F	AL/GL1T		AO		
103A	5.0	3' - 0"	7' - 0"	1 3/4"	6	AL/GL1T	E	AL/GL1T	CR			
103B	20.0	3' - 0"	7' - 0"	1 3/4"	3	WD/GL1T	A	HM				
104A	5.0	3' - 0"	7' - 0"	1 3/4"	6	AL/GL1T	E	AL/GL1T	CR			
104AA	11.0	4' - 0"	7' - 0"	1 3/4"	4	WD	C	HM				
104B	21.0	3' - 0"	7' - 0"	1 3/4"	3	WD/GL1T	A	HM				
106A	22.0	3' - 0"	7' - 0"	1 3/4"	1	WD	A	HM		AO		
107A	22.0	3' - 0"	7' - 0"	1 3/4"	1	WD	A	HM		AO		
108A	8.0	3' - 0"	7' - 0"	1 3/4"	2	WD/GL1T	B	HM/GL1T	CR			
111A	15.0	3' - 0"	7' - 0"	1 3/4"	3	WD/GL1T	A	HM				
112A	15.0	3' - 0"	7' - 0"	1 3/4"	3	WD/GL1T	A	HM				
115A	15.0	3' - 0"	7' - 0"	1 3/4"	3	WD/GL1T	A	HM				
116A	13.0	3' - 0"	7' - 0"	1 3/4"	3	WD/GL1T	A	HM				
117A	15.0	3' - 0"	7' - 0"	1 3/4"	3	WD/GL1T	A	HM				
118A	15.0	3' - 0"	7' - 0"	1 3/4"	3	WD/GL1T	A	HM				
121A	8.0	3' - 0"	7' - 0"	1 3/4"	2	WD/GL1T	B	HM/GL1T	CR			
122A	23.0	3' - 0"	5' - 2"		5	AL	-	AL				COILING COUNTER DOOR, OPENING 3'-0" BY 5'-2", GUIDE TRACK HEIGHT: 6'-10" MIN.
125A	15.0	3' - 0"	7' - 0"	1 3/4"	3	WD/GL1T	A	HM				
135A	7.0	3' - 0"	7' - 0"	1 3/4"	2	WD/GL1T	B	HM/GL1T	CR			
135B	2.0	3' - 0"	7' - 0"	1 3/4"	6	AL/GL2T	D	AL/GL2T	CR			
136A	2.0	3' - 0"	7' - 0"	1 3/4"	6	AL/GL2T	D	AL/GL2T	CR			
137A	22.0	3' - 0"	7' - 0"	1 3/4"	1	WD	A	HM		AO		
138A	22.0	3' - 0"	7' - 0"	1 3/4"	1	WD	A	HM		AO		
139A	19.0	3' - 0"	7' - 0"	1 3/4"	3	WD/GL1T	A	HM				
140A	18.0	4' - 0"	7' - 0"	1 3/4"	4	WD	C	HM				
140AA	12.0	4' - 0"	7' - 0"	1 3/4"	4	WD	C	HM				
141A	18.0	4' - 0"	7' - 0"	1 3/4"	4	WD	C	HM				

DOOR SCHEDULE

Mark	HW Set	Door Width	Door Height	Door Thickness	Type	Finish	Frame Type	Frame Material	Access Control	Auto Operator	UL Rating	Comments
141AA	9.0	3' - 0"	7' - 0"	1 3/4"	1	WD	A	HM	CR			
142A	10.0	3' - 0"	7' - 0"	1 3/4"	1	WD	A	HM	CR			
143A	14.0	3' - 0"	7' - 0"	1 3/4"	1	WD	A	HM				
144A	8.0	3' - 0"	7' - 0"	1 3/4"	2	WD/GL1T	B	HM/GL1T	CR			
146A	15.0	3' - 0"	7' - 0"	1 3/4"	3	WD/GL1T	A	HM				
147A	15.0	3' - 0"	7' - 0"	1 3/4"	3	WD/GL1T	A	HM				
148A	15.0	3' - 0"	7' - 0"	1 3/4"	3	WD/GL1T	A	HM				
150A	16.0	3' - 0"	7' - 0"	1 3/4"	1	WD	A	HM				
150B	17.0	3' - 0"	7' - 0"	1 3/4"	1	WD	A	HM				
151A	13.0	3' - 0"	7' - 0"	1 3/4"	1	WD	A	HM				
159A	15.0	3' - 0"	7' - 0"	1 3/4"	3	WD/GL1T	A	HM				
162A	15.0	3' - 0"	7' - 0"	1 3/4"	3	WD/GL1T	A	HM				
163A	15.0	3' - 0"	7' - 0"	1 3/4"	3	WD/GL1T	A	HM				
164A	8.0	3' - 0"	7' - 0"	1 3/4"	2	WD/GL1T	B	HM/GL1T	CR			
165A	15.0	3' - 0"	7' - 0"	1 3/4"	1	WD	A	HM				
166A	15.0	3' - 0"	7' - 0"	1 3/4"	3	WD/GL1T	A	HM				
168A	15.0	3' - 0"	7' - 0"	1 3/4"	3	WD/GL1T	A	HM				
169A	15.0	3' - 0"	7' - 0"	1 3/4"	3	WD/GL1T	A	HM				
173A	13.0	3' - 0"	7' - 0"	1 3/4"	1	WD	A	HM				
177A	15.0	3' - 0"	7' - 0"	1 3/4"	3	WD/GL1T	A	HM				
178A	15.0	3' - 0"	7' - 0"	1 3/4"	3	WD/GL1T	A	HM				
179A	15.0	3' - 0"	7' - 0"	1 3/4"	3	WD/GL1T	A	HM				
180A	15.0	3' - 0"	7' - 0"	1 3/4"	3	WD/GL1T	A	HM				
181A	15.0	3' - 0"	7' - 0"	1 3/4"	3	WD/GL1T	A	HM				
182A	15.0	3' - 0"	7' - 0"	1 3/4"	3	WD/GL1T	A	HM				
183A	15.0	3' - 0"	7' - 0"	1 3/4"	3	WD/GL1T	A	HM				
184A	15.0	3' - 0"	7' - 0"	1 3/4"	3	WD/GL1T	A	HM				
185A	15.0	3' - 0"	7' - 0"	1 3/4"	3	WD/GL1T	A	HM				
186A	15.0	3' - 0"	7' - 0"	1 3/4"	3	WD/GL1T	A	HM				
187A	3.0	3' - 0"	7' - 0"	1 3/4"	5	HM	A	HM				ACCESSIBLE BY KNOX BOX
188A	4.0	3' - 0"	7' - 0"	1 3/4"	5	HM	A	HM				ACCESSIBLE BY KNOX BOX

DOOR SCHEDULE LEGEND

AL	ALUMINUM STOREFRONT SYSTEM
AO	DOOR AUTO OPERATOR
CR	CARD READER ACCESS
GL1T / GL2T	REFER TO SPECS SECTION 088000 - GLAZING FOR DOOR GLAZING TYPES
HM	HOLLOW METAL
WD	WOOD

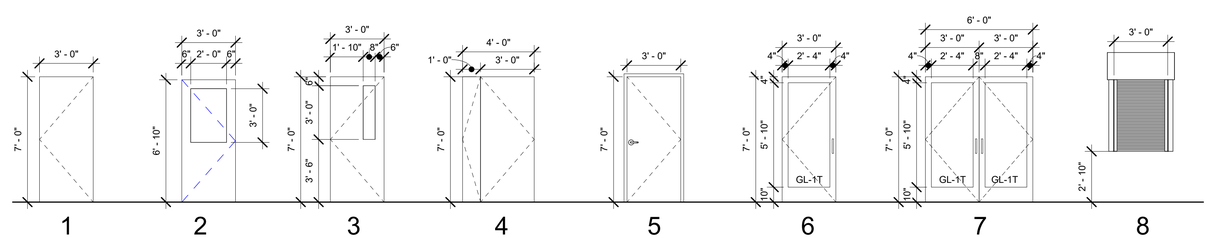

Door Types
1/4" = 1'-0"

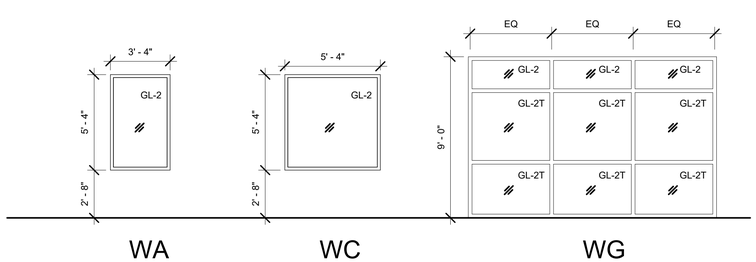

Window Types
1/4" = 1'-0"

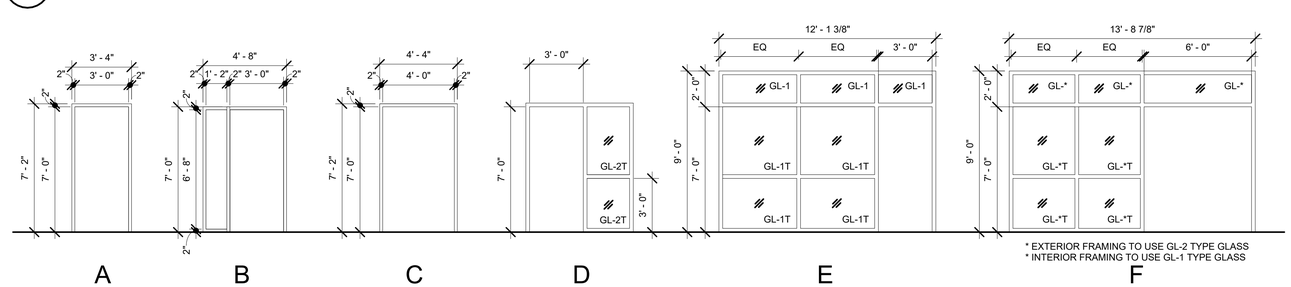

Frame Types
1/4" = 1'-0"

NOTE:
REFER TO SPECS SECTION 088000 - GLAZING FOR GLAZING TYPES

JSRa
JOHNSON SMITTHIPONG & ROSAMOND ASSOCIATES, INC.
5210 E Williams Cir • Ste 600 • Tucson, AZ 85711
(520) 547-7904 • www.jsrarchinc.com

Consultants:

REGISTERED ARCHITECT
CERTIFICATE NO. 9793
VERNON ROSAMOND
Date Signed 10/4/22
ARIZONA, U.S.A.

WHITERIVER ADMINISTRATION OFFICE BUILDING

200 W HOSPITAL DR
WHITERIVER, AZ 85941

HHSI1022018800007I

U. S. DEPARTMENT OF HEALTH AND HUMAN SERVICES
INDIAN HEALTH SERVICE
PHOENIX AREA OFFICE

No.	Date	Description

Issue Date:	11/3/2022
Project No:	21-020
Scale:	1/4" = 1'-0"
Drawn By:	SP
Checked By:	BD

FINAL CD

Sheet Title:

DOOR & WINDOW SCHEDULE

Sheet Number:

A602

Autodesk Docs://21-020 Whiteriver Admin v2022/21-020 06 Arch WR Admin 2022.rvt
11/3/2022 2:36:40 PM

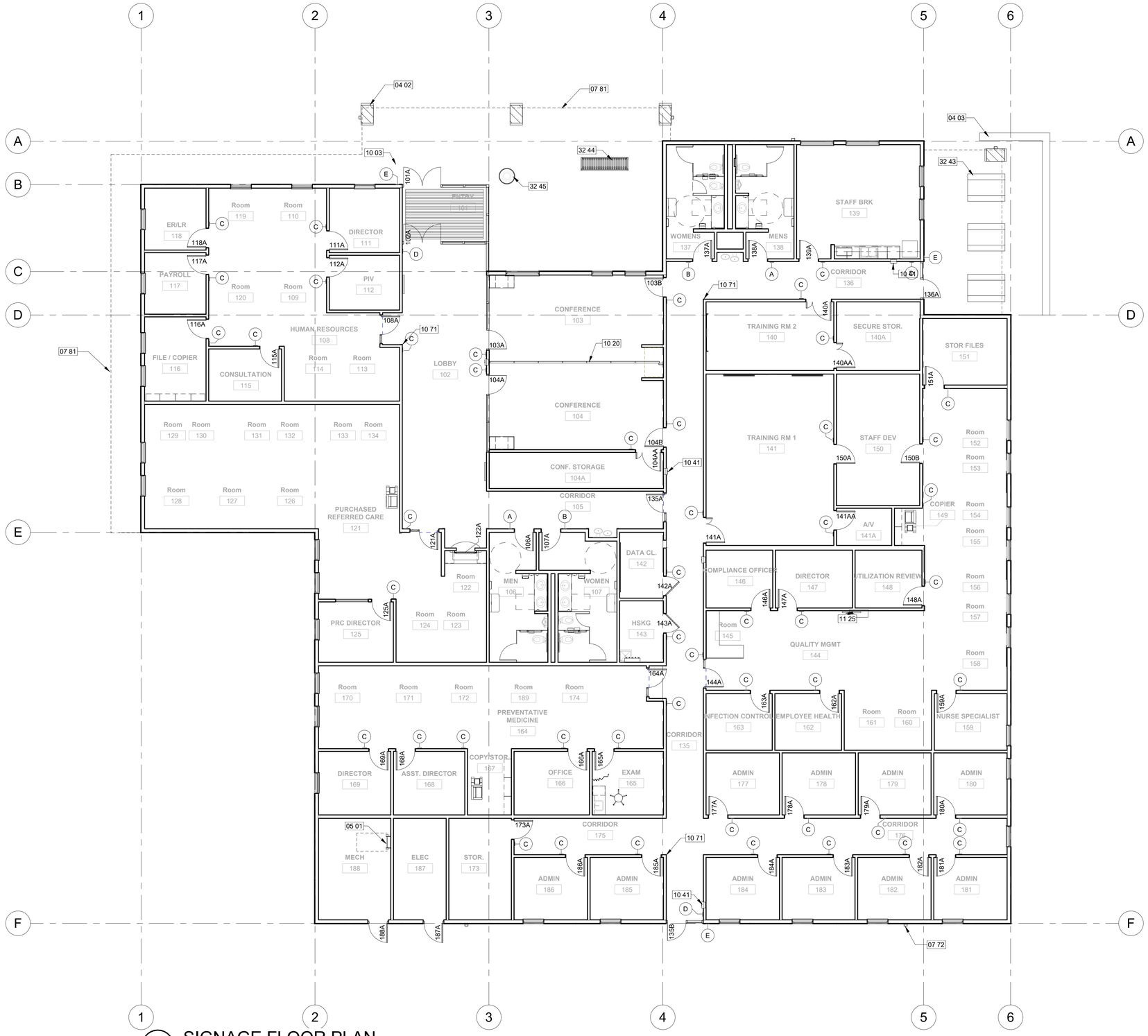

A1 SIGNAGE FLOOR PLAN
1/8" = 1'-0"

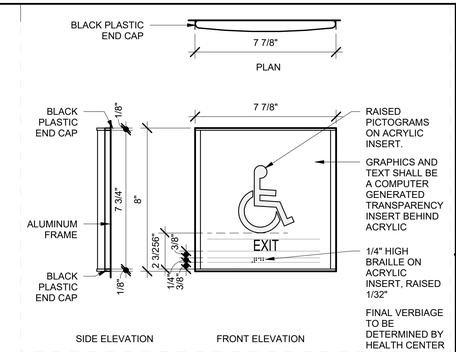

D5 SIGN TYPE D
3" = 1'-0"

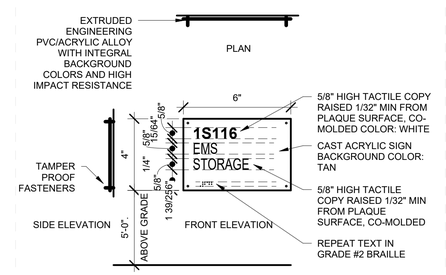

C5 SIGN TYPE C
3" = 1'-0"

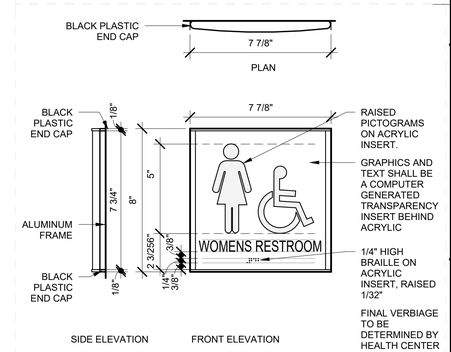

B5 SIGN - TYPE B
3" = 1'-0"

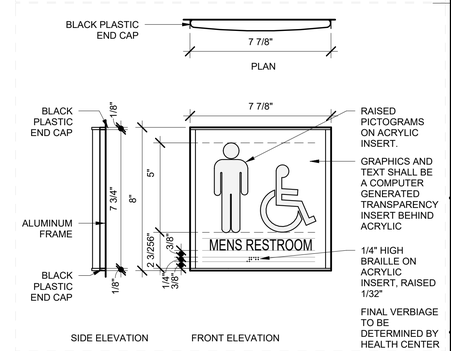

A5 SIGN TYPE A
3" = 1'-0"

JSRa
JOHNSON SMITTHIPONG & ROSAMOND ASSOCIATES, INC.
5210 E Williams Cir • Ste 600 • Tucson, AZ 85711
(520) 547-7904 • www.jsrarchinc.com

Consultants:

REGISTERED ARCHITECT
CERTIFICATE NO. 9793
VERNON ROSAMOND
Date Signed 11/3/22
ARIZONA, U.S.A.

WHITERIVER ADMINISTRATION OFFICE BUILDING

200 W HOSPITAL DR
WHITERIVER, AZ 85941

HHSI102201800007I

U. S. DEPARTMENT OF HEALTH AND HUMAN SERVICES
INDIAN HEALTH SERVICE
PHOENIX AREA OFFICE

No.	Date	Description

Issue Date:	11/3/2022
Project No:	21-020
Scale:	As indicated
Drawn By:	SP
Checked By:	BD

FINAL CD

Sheet Title:

SIGNAGE FLOOR PLAN

Sheet Number:

A603

Autodesk Docs://21-020 Whiteriver Admin v2022/21-020 06 Arch WR Admin 2022.rvt
11/3/2022 2:36:43 PM

SIGN SCHEDULE

Room #	Room Name	Sign Type	Sign #
101	ENTRY	E	101
102	LOBBY	D	102
103	CONFERENCE	C	103
104	CONFERENCE	C	104
104A	CONF. STORAGE	C	104A
105	CORRIDOR	-	105
106	MEN	A	106
107	WOMEN	B	107
108	HUMAN RESOURCES	C	108
109	Room	-	109
110	Room	-	110
111	DIRECTOR	C	111
112	PIV	C	112
113	Room	-	113
114	Room	-	114
115	CONSULTATION	C	115
116	FILE / COPIER	C	116
117	PAYROLL	C	117
118	ER/LR	C	118
119	Room	-	119
120	Room	-	120
121	PURCHASED REFERRED CARE	C	121
122	Room	-	122
123	Room	-	123
124	Room	-	124
125	PRC DIRECTOR	C	125
126	Room	-	126
127	Room	-	127
128	Room	-	128
129	Room	-	129
130	Room	-	130
131	Room	-	131
132	Room	-	132
133	Room	-	133
134	Room	-	134
135	CORRIDOR	E	135
136	CORRIDOR	E	136
137	WOMENS	B	137
138	MENS	A	138
139	STAFF BRK	C	139
140	TRAINING RM 2	C	140
140A	SECURE STOR.	C	140A
141	TRAINING RM 1	C	141
141A	A/V	C	141A
142	DATA CL.	C	142
143	HSKG	C	143

SIGN SCHEDULE

Room #	Room Name	Sign Type	Sign #
144	QUALITY MGMT	C	144
145	Room	-	145
146	COMPLIANCE OFFICER	C	146
147	DIRECTOR	C	147
148	UTILIZATION REVIEW	C	148
149	COPIER	C	149
150	STAFF DEV	C	150
151	STOR FILES	C	151
152	Room	-	152
153	Room	-	153
154	Room	-	154
155	Room	-	155
156	Room	-	156
157	Room	-	157
158	Room	-	158
159	NURSE SPECIALIST	C	159
160	Room	-	160
161	Room	-	161
162	EMPLOYEE HEALTH	C	162
163	INFECTION CONTROL	C	163
164	PREVENTATIVE MEDICINE	C	164
165	EXAM	C	165
166	OFFICE	C	166
167	COPY/STOR.	C	167
168	ASST. DIRECTOR	C	168
169	DIRECTOR	C	169
170	Room	-	170
171	Room	-	171
172	Room	-	172
173	STOR.	C	173
174	Room	-	174
175	CORRIDOR	-	175
176	CORRIDOR	-	176
177	ADMIN	C	177
178	ADMIN	C	178
179	ADMIN	C	179
180	ADMIN	C	180
181	ADMIN	C	181
182	ADMIN	C	182
183	ADMIN	C	183
184	ADMIN	C	184
185	ADMIN	C	185
186	ADMIN	C	186
187	ELEC	F	187
188	MECH	G	188
189	Room	-	189

GENERAL NOTES

A	OWNER TO APPROVE ROOM NUMBERS AND ROOM NAMES.
B	REFER TO DETAIL A4/A604 FOR SIGNAGE AT CORRIDOR EXTERIOR DOORS 135B AND 136A.

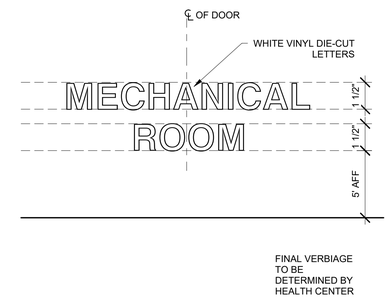

C5 SIGN TYPE G
3" = 1'-0"

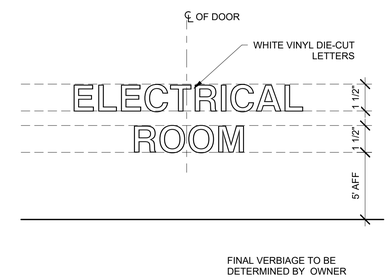

B5 SIGN TYPE F
3" = 1'-0"

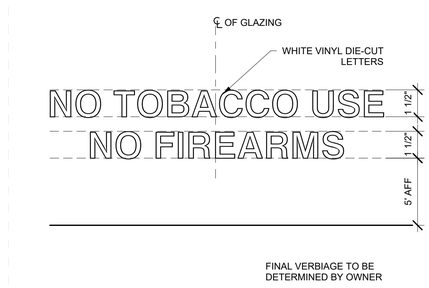

A4 SIGN TYPE E
3" = 1'-0"

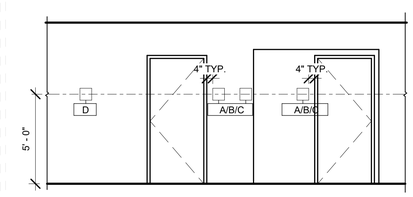

NOTE: WHEN SIGN CANNOT BE IMMEDIATELY ADJACENT TO DOOR FRAME, MOUNT ON SIDE WALL NEAR LEVER HANDLE. MOUNTING LOCATION SHALL BE SO THAT A PERSON MAY APPROACH WITHIN 3 INCHES OF SIGNAGE WITHOUT ENCOUNTERING PROTRUDING OBJECTS OR STANDING WITHIN THE SWING OF A DOOR. SIGN INSTALLER TO SUBMIT SHOP DRAWINGS SHOWING ACTUAL SIGN INSTALLATION LOCATION.

Signage Mounting Heights
1/4" = 1'-0"

JSRa
JOHNSON SMITTHIPONG & ROSAMOND ASSOCIATES, INC.
5210 E Williams Cir • Ste 600 • Tucson, AZ 85711
(520) 547-7904 • www.jsrarchinc.com

Consultants:

REGISTERED ARCHITECT
CERTIFICATE NO. 9793
VERNON ROSAMOND
Date Signed 11/3/22
ARIZONA, U.S.A.

WHITERIVER ADMINISTRATION OFFICE BUILDING

200 W HOSPITAL DR
WHITERIVER, AZ 85941

HHSI1022018800007I

U. S. DEPARTMENT OF HEALTH AND HUMAN SERVICES
INDIAN HEALTH SERVICE
PHOENIX AREA OFFICE

No.	Date	Description

Issue Date:	11/3/2022
Project No:	21-020
Scale:	As indicated
Drawn By:	SP
Checked By:	BD

FINAL CD

Sheet Title:

SIGNAGE SCHEDULE

Sheet Number:

A604

Autodesk Docs://21-020 Whiteriver Admin v2022/21-020 06 Arch WR Admin 2022.rvt
11/3/2022 2:36:43 PM

1 FURNITURE PLAN
1/8" = 1'-0"

GENERAL NOTES:

1. THESE PLANS ARE NOT FOR CONSTRUCTION
2. FURNITURE VENDOR TO FIELD MEASURE ALL AREAS PRIOR TO ORDER AND ADVISE AVIAR DESIGN OF ANY DISCREPANCIES IMMEDIATELY.
3. FURNITURE VENDOR TO FIELD VERIFY BUILDING UTILITIES TO SUPPORT FURNITURE PRIOR TO ORDER.
4. IT IS THE RESPONSIBILITY OF THE INSTALLER TO FOLLOW ALL MANUFACTURER'S INSTALLATION GUIDELINES.
5. FOR ALL WALL MOUNTED ITEMS, IT IS THE RESPONSIBILITY OF THE INSTALLER TO ENSURE THAT ALL ITEMS ARE SECURELY FASTENED TO THE WALL STUDS.
6. PROVIDE SHIMS AT WALL STARTS NEXT TO WALL STRIPS.
7. ALL WORKSURFACES TO BE MOUNTED AT 29" AFF UNLESS OTHERWISE NOTED.
8. INSTALL WORKSURFACE FLAT BRACKETS AS REQUIRED FOR A CORRECT AND SAFE INSTALLATION.
9. UNLESS INDICATED, PANELS AGAINST A WALL SHALL HAVE NO TILES ON BACK.
10. FOR PANELS OR PANEL SIDE WITHOUT ANY DUPLEX OR DATA SYMBOLS, THERE SHALL BE NO CUT OUTS IN BADE TRIM.
11. INSTALLATION MUST BE IN ACCORDANCE WITH REGIONAL SEISMIC SAFETY REQUIREMENTS.

ABBREVIATIONS:

CWS	CORNER WORK SURFACE
HA	HEIGHT ADJUSTABLE
MBF	MOBILE BOX/FILE W/ CUSHION TOP
MP	MODESTY PANEL
ST	STORAGE
TC	TRANSACTION COUNTER
WS	WORK SURFACE

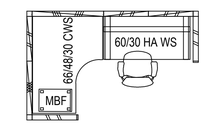

2 TYPICAL 01
1/4" = 1'-0"

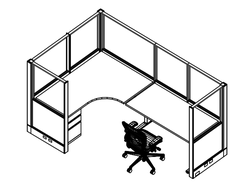

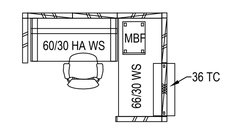

3 TYPICAL 02
1/4" = 1'-0"

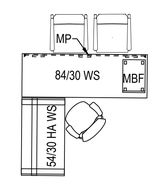

4 OFFICE 01
1/4" = 1'-0"

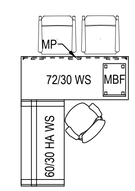

5 OFFICE 02
1/4" = 1'-0"

JSRa
JOHNSON SMITTHIPONG & ROSAMOND ASSOCIATES, INC.
5210 E Williams Cir • Ste 600 • Tucson, AZ 85711
(520) 547-7904 • www.jsrarchinc.com

Consultants:

AVIAR COMMERCIAL SPACE PLANNING & DESIGN

WHITERIVER ADMINISTRATION OFFICE BUILDING

200 W HOSPITAL DR
WHITERIVER, AZ 85941

HHSI1022018800007I

U. S. DEPARTMENT OF HEALTH AND HUMAN SERVICES
INDIAN HEALTH SERVICE
PHOENIX AREA OFFICE

No.	Date	Description

Issue Date:	11/3/22
Project No:	21-020
Scale:	SP
Drawn By:	KV
Checked By:	LM

FINAL CD

Sheet Title:

FURNITURE PLAN

Sheet Number:

I001

Autodesk Docs://2022 Whiteriver Modular/21-020 06 Arch WRMOB 2022.rvt
5/17/2021 2:51:02 PM

1 ELECTRICAL PLAN
1/8" = 1'-0"

PANEL ELECTRICAL NOTES:

1. THESE PLANS ARE NOT FOR CONSTRUCTION
2. ELECTRICAL IN PANELS SHALL BE AVAILABLE AS BASELINE OR BELTLINE LOCATIONS BASED OFF OF THE PANEL ELEVATIONS.
3. PANEL WHIPS TO BE CUT DOWN AT INSTALLATION TO REDUCE CLUTTER UNDER WORKSURFACES
4. POWER PANELS WILL HAVE A 8' EXTENSION OF WIRING TO CONNECT TO J-BOX IN CEILING DECK
5. POWER POLE WILL EXTEND 6"-12" ABOVE DROP CEILING

BUILDING ELECTRICAL NOTES:

1. THESE PLANS ARE NOT FOR CONSTRUCTION.
2. REQUESTED ELECTRICAL LOCATIONS FOR THE FURNITURE (FF&E) USE ONLY. ELECTRICAL ENGINEER IS REQUIRED TO MEET ALL CODE REQUIREMENTS ON THE BUILDING ELECTRICAL DRAWINGS.
3. LOCATIONS OF ELECTRICAL/DATA OUTLETS SHOULD BE WITHIN 6" OF GIVEN DIMENSION.
4. UNLESS OTHERWISE NOTED, WALL ELECTRICAL AND DATA OUTLETS SHOULD BE INSTALLED AT INDUSTRY STANDARD AFF.
5. REFERENCE ELECTRICAL SHEETS.

PANEL SYMBOLS:

= BASE POWER AND DATA
= BELT LINE TILE POWER AND DATA

ELECTRICAL LEGEND

- DUPLEX RECEIPTACLE WALL MOUNTED
- DUPLEX CONTROLLED RECEPTACLE WALL MOUNTED
- QUADAPLEX RECEIPTACLE WALL MOUNTED
- DUPLEX RECEIPTACLE FLOOR MOUNTED
- QUADRAPLEX RECEPTACLE FLOOR MOUNTED
- JUNITION BOX WALL MOUNTED
- JUNCTION BOX FLOOR MOUNTED
- THERMOSTAT
- TELEPHONED OUTLET WALL MOUNTED
- TELEPHONE OUTLET FLOOR MOUNTED
- DATA OUTLET WALL MOUNTED
- DATA OUTLET FLOOR MOUNTED
- COMBO PHONE/DATA OUTLET WALL MOUNTED
- COMBO PHONE DATA OUTLET FLOOR MOUNTED
- LIGHT SWITCH
- PANEL WHIP

JOHNSON SMITTHIPONG & ROSAMOND ASSOCIATES, INC.
5210 E Williams Cir ● Ste 600 ● Tucson, AZ 85711
(520) 547-7904 ● www.jsrarchinc.com

Consultants:

AVIAR COMMERCIAL SPACE PLANNING & DESIGN

WHITERIVER ADMINISTRATION OFFICE BUILDING

200 W HOSPITAL DR
WHITERIVER, AZ 85941

HHSI1022018800007I

U. S. DEPARTMENT OF HEALTH AND HUMAN SERVICES
INDIAN HEALTH SERVICE
PHOENIX AREA OFFICE

No.	Date	Description

Issue Date:	11/3/22
Project No:	21-020
Scale:	SP
Drawn By:	KV
Checked By:	LM

FINAL CD

Sheet Title:

MODULAR FURNITURE ELECTRICAL PLAN

Sheet Number:

I002

Autodesk Docs://2022 Whiteriver Modular/21-020 06 Arch WRMOB 2022.rvt
5/17/2021 2:51:02 PM

PANEL NOTES:

1. THESE PLANS ARE NOT FOR CONSTRUCTION
2. PANEL PRODUCT SHALL BE A FRAME & TILE SYSTEM. TILES SHALL HAVE THE ABILITY TO BE INDEPENDENTLY REMOVED.
3. PANEL HEIGHTS ARE GIVEN IN RANGES. VENDOR SHALL SELECT A HEIGHT WITHIN THAT RANGE THAT IS WITHIN MANUFACTURER'S STANDARD LINE.
4. VENDOR SHALL SELECT TILE SIZES WITHIN MANUFACTURER'S STANDARD LINE THAT MOST CLOSELY FIT PERCENTAGE SIZES.
5. IF VENDOR HAS TO CHANGE PANEL WIDTHS DUE TO MANUFACTURER'S STANDARD SIZING, VENDOR SHALL MAINTAIN GIVEN DIMENSIONS AS CLOSELY AS
6. POSSIBLE WITH NO CRITICAL SPACE DIMENSIONS GOING BELOW CODE. VENDOR SHALL INDICATE WHERE THERE ARE DIMENSION DISCREPANCIES.
7. PANEL WIDTHS ARE SUGGESTION ONLY. VENDER MAY CHANGE WIDTH TO MEET MANUFACTURES STANDARD SIZES. OVERALL FOOTPRINT OF WORKSTATION CANNOT CHANGE.

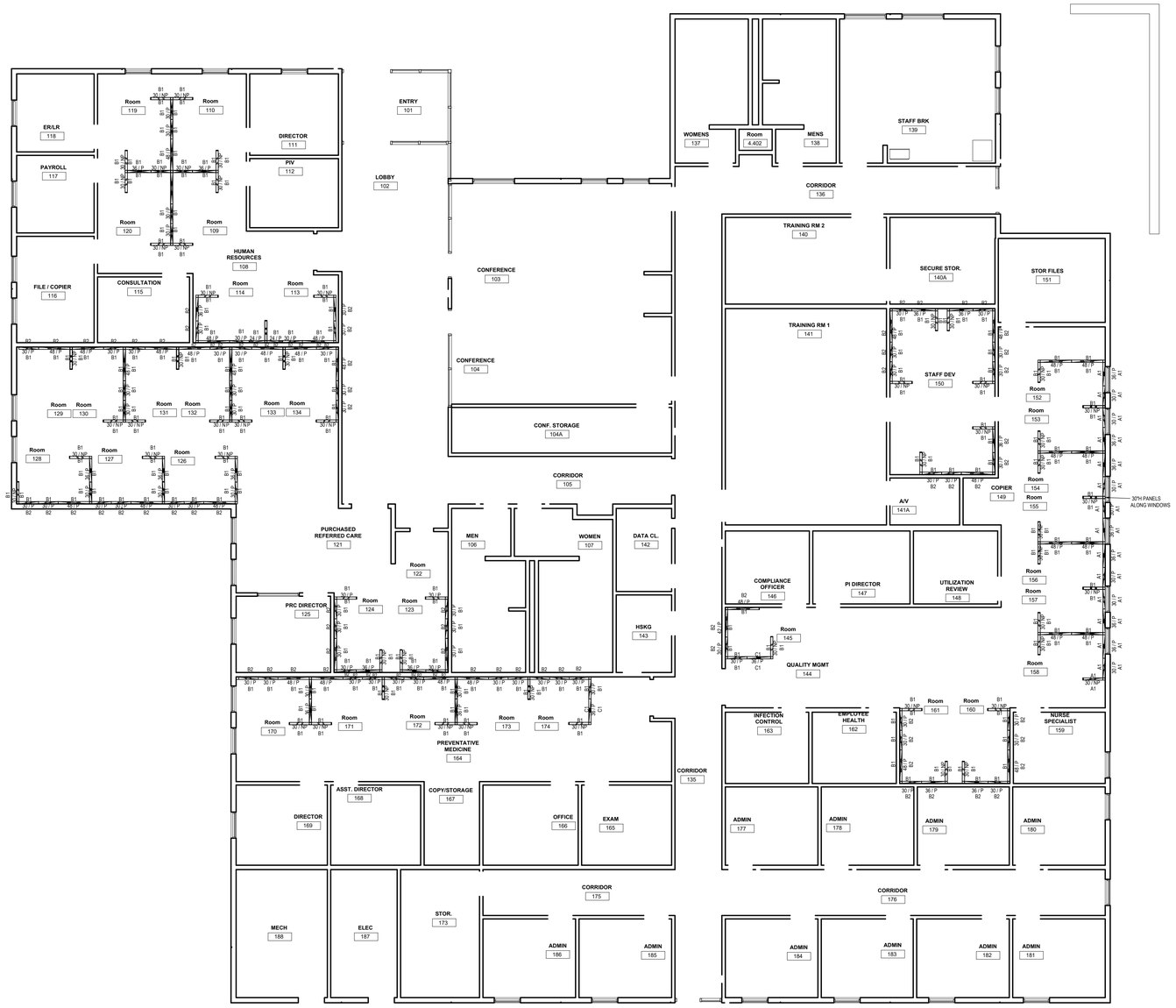

1 PANEL PLAN
1/8" = 1'-0"

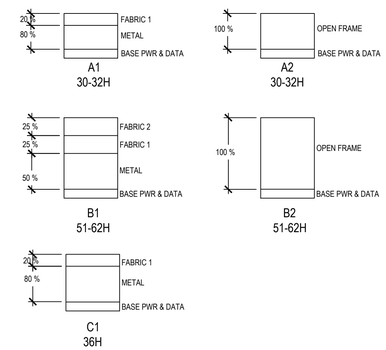

JOHNSON SMITTHIPONG & ROSAMOND ASSOCIATES, INC.
5210 E Williams Cir ● Ste 600 ● Tucson, AZ 85711
(520) 547-7904 ● www.jsrarchinc.com

Consultants:

AVIAR COMMERCIAL SPACE PLANNING & DESIGN

WHITERIVER ADMINISTRATION OFFICE BUILDING

200 W HOSPITAL DR
WHITERIVER, AZ 85941

HHSI1022018800007I

U. S. DEPARTMENT OF HEALTH AND HUMAN SERVICES
INDIAN HEALTH SERVICE
PHOENIX AREA OFFICE

No.	Date	Description

Issue Date:	11/3/22
Project No:	21-020
Scale:	SP
Drawn By:	KV
Checked By:	LM

FINAL CD

Sheet Title:

PANEL PLAN

Sheet Number:

I003

Autodesk Docs://2022 Whiteriver Modular/21-020 06 Arch WRMOB 2022.rvt
5/17/2021 2:51:02 PM

GENERAL NOTES:

1. PROVIDE COMPLETE, HYDRAULICALLY CALCULATED, FULLY AUTOMATIC WET-PIPE SPRINKLER SYSTEMS THROUGHOUT THE ENTIRE BUILDING, INCLUDING THE ABOVE-CEILING SPACES. REFER TO CIVIL, ARCHITECTURAL, STRUCTURAL AND ALL M.E.P. PLANS FOR ADDITIONAL INFORMATION AND DETAILS.

2. THE FIRE PROTECTION CONTRACTOR SHALL INSTALL THE FIRE PROTECTION SYSTEMS IN ACCORDANCE WITH ALL APPLICABLE NFPA STANDARDS, IHS TECHNICAL SPECIFICATIONS, OWNERS INSURANCE UNDERWRITER, PROJECT SPECIFICATIONS, ALL APPLICABLE STATE AND LOCAL CODES & ORDINANCES.

3. FIRE PROTECTION SYSTEMS INSTALLATION SHALL BE COMPLETE WITH: UNDERGROUND LEAD-IN, BACKFLOW ASSEMBLY, FIRE DEPARTMENT CONNECTION (POLISHED CHROME, FLUSH MOUNT), ALL NECESSARY CONTROL VALVES, SPRINKLER SYSTEM PIPING, SPRINKLER HEADS (CEILING LEVEL AND ABOVE-CEILING (COMBUSTIBLE CONCEALED SPACE) SPRINKLERS, ELECTRONIC SUPERVISION, NECESSARY TRIMMINGS, PRESSURE RELIEF VALVE, AUTOMATIC AIR RELEASE VALVE, APPURTENANCES, ACCESSORIES, ETC., AS REQUIRED BY MANUFACTURERS LITERATURE, NFPA STANDARDS, OWNER, AND LOCAL AUTHORITIES.

4. THE FIRE PROTECTION CONTRACTOR SHALL BE LICENSED TO PERFORM WORK WITHIN THE STATE OF ARIZONA WITH A FULL-TIME, DULY LICENSED RESPONSIBLE MANAGING EMPLOYEE/ CERTIFIED DESIGNER ON STAFF AS REQUIRED BY THE STATE OF ARIZONA. THE FIRE PROTECTION DESIGNER SHALL HAVE A MINIMUM OF FIVE (5) YEARS OF VERIFIABLE DESIGN EXPERIENCE AND HAVE N.I.C.E.T. LEVEL III CERTIFICATION IN WATER-BASED SYSTEMS LAYOUT.

5. THE FIRE PROTECTION CONTRACTOR SHALL BASE BID AND PROJECT DESIGN ON SITE SURVEY AND VERY CAREFUL COORDINATION WITH THE CIVIL DRAWINGS, STRUCTURAL & FOUNDATION DRAWINGS, ARCHITECTURAL DRAWINGS, MECHANICAL DUCTWORK, MECHANICAL PIPING, DOMESTIC WATER SYSTEMS PIPING, ELECTRICAL FIXTURES & SYSTEMS. THERE MAY BE LIMITED SPACE ABOVE CEILINGS.

6. REFER TO NOTES ON DRAWINGS AND SPECIFICATIONS FOR ADDITIONAL REQUIREMENTS. SEE NOTICE TO CONTRACTORS, ON THESE SHEETS AS WELL.

7. ALL FINAL PIPE SIZING SHALL BE ESTABLISHED BY THE INSTALLING FIRE PROTECTION CONTRACTOR BY MEANS OF HYDRAULIC CALCULATIONS BASED ON NFPA STANDARDS. HYDRAULIC CALCULATIONS SHALL BE BASED UPON A CURRENT WATER FLOW TEST (MUST BE WITHIN SIX MONTHS OF DESIGN). OBTAIN CURRENT WATER FLOW TEST FROM THE GOVERNING WATER AUTHORITY. PROVIDE NEW WATER FLOW TEST RESULTS IN SUBMITTAL PACKAGE. INCLUDE THE FOLLOWING: DATE TEST IS CONDUCTED, TIME OF TEST, STATIC & RESIDUAL PRESSURES, MEASURED FLOW, NAME OF THOSE CONDUCTING TEST, LOCATION OF TEST HYDRANTS, ETC. PROVIDE MINIMUM OF 10 PSI SAFETY FACTOR FOR ALL HYDRAULIC CALCULATIONS.

8. PROVIDE DOUBLE DETECTOR CHECK BACKFLOW PREVENTION ASSEMBLY TO ISOLATE THE FIRE PROTECTION SYSTEMS INSTALLATION FROM THE MAIN, POTABLE WATER SUPPLY. ASSEMBLY SHALL BE LOCATED INSIDE THE BUILDING, IN THE MECHANICAL ROOM, WHERE THE NEW FIRE PROTECTION SUPPLY ENTERS THE BUILDING. COORDINATE REQUIREMENTS WITH THE CITY OF WHITERIVER AND THE STATE OF ARIZONA. CONTROL VALVES ON THE BACKFLOW PREVENTION ASSEMBLY MAY THE GROOVED-END BUTTERFLY TYPE AND SHALL BE ELECTRONICALLY SUPERVISED NORMALLY OPEN.

9. PROVISIONS SHALL BE MADE TO FORWARD FLOW TEST THE BACKFLOW PREVENTION ASSEMBLY BY MEANS OF A BYPASS AROUND THE FDC'S CHECK VALVE. A 4" GROOVED-END BUTTERFLY VALVE SHALL CONTROL THE BYPASS AND SHALL BE ELECTRONICALLY SUPERVISED IN THE NORMALLY CLOSED POSITION.

10. FIRE PROTECTION SHOP DRAWINGS SHALL HAVE COMPLETE CEILING PLANS, REGARDLESS OF TYPE OF CEILING (ACOUSTICAL LAY-IN, GYPSUM, MEMBRANE, CLOUD, EXPOSED, ETC.), INDICATING THE LOCATION OF EACH SPRINKLER HEAD, AS WELL AS PIPING LAYOUTS. ALL FIRE PROTECTION PIPING SHALL BE COORDINATED WITH OTHER DISCIPLINES AND STRUCTURAL MEMBERS. PROVIDE ADDITIONAL SPRINKLER HEADS (OVER CODE MINIMUM) IF NECESSARY TO OBTAIN SYMMETRICAL LAYOUTS.

11. ABOVEGROUND WET-PIPE FIRE PROTECTION SYSTEMS PIPING SHALL BE BLACK SCHEDULE 10 STEEL WITH ROLL GROOVED END PREPARATIONS, MEETING ALL NFPA 13 AND FM-GLOBAL REQUIREMENTS AND BLACK SCHEDULE 40 STEEL WITH THREADED END PREPARATIONS, MEETING ALL NFPA 13 AND FM-GLOBAL REQUIREMENTS. ALL FIRE PROTECTION PIPING SHALL BE UL LISTED AND FM-GLOBAL APPROVED. NO FOREIGN PIPING ALLOWED.

12. WET-PIPE FIRE PROTECTION FITTINGS SHALL BE BLACK CAST IRON THREADED OR FLANGED, CLASS 125; BLACK MALLEABLE IRON THREADED CLASS 250; OR BLACK DUCTILE IRON THREADED CLASS 300 OR GROOVED. GROOVED COUPLINGS AND GROOVED FITTINGS SHALL BE OF THE SAME MANUFACTURER AND SERIES. NO USED FITTINGS OF ANY KIND WILL BE ALLOWED. NO SOCKIT OR SEGMENTED FITTINGS WILL BE ALLOWED. ALL FITTINGS SHALL BE UL LISTED AND FM-GLOBAL APPROVED. NO FOREIGN FITTINGS ALLOWED.

13. CPVC PIPING AND FITTINGS SHALL NOT BE ACCEPTABLE ON ANY PORTION OF THIS PROJECT. SCHEDULE 5, SCHEDULE 7, ALLIED "XL/ BLT", EDDY THREAD, EDDY LITE, SUPER 40 OR SIMILAR THINWALL PIPE TYPES SHALL NOT BE ACCEPTABLE ON ANY PORTION OF THIS PROJECT - NO EXCEPTIONS.

14. ALL FIRE PROTECTION CONTROL VALVES SHALL HAVE ELECTRONIC SUPERVISION, SHALL INTERFACE WITH THE BUILDING FIRE ALARM SYSTEM AND SHALL BE SUPERVISED NORMALLY OPEN, UNLESS NOTED OTHERWISE.

15. SPECIAL CONSIDERATION SHALL BE GIVEN TO AREAS THROUGHOUT THE BUILDING SUCH AS DROPPED SOFFITS, RAISED CEILING AND LIGHTING SOFFITS, MOULDINGS, BEAMS, COLUMNS, ETC., THAT NECESSITATE ADDITIONAL SPRINKLER HEADS. REFER TO ARCHITECTURAL, STRUCTURAL AND BUILDING MANUFACTURER DRAWINGS FOR DETAILS.

16. THE GENERAL CONTRACTOR SHALL CONDUCT A COORDINATION MEETING WITH THE SUBCONTRACTORS TO ESTABLISH CLEARANCE REQUIREMENTS NEEDED FOR MECHANICAL, PLUMBING AND ELECTRICAL WORK PRIOR TO FABRICATION OF THE SPRINKLER SYSTEMS.

17. WHETHER SHOWN ON THESE DRAWINGS OR NOT, THE LOCATIONS OF LIGHTING FIXTURES SHALL TAKE PRIORITY OVER THE SPRINKLER HEAD LOCATIONS, AND THE SPRINKLER SYSTEM PIPING SHALL BE OFFSET "UP-OVER-DOWN", AROUND OR WHATEVER MAY BE NECESSARY TO FACILITATE THE LIGHTING LAYOUT. ADDITIONALLY, THE MECHANICAL HVAC SYSTEMS SHALL TAKE PRECEDENCE OVER THE PIPE ROUTING OF THE FIRE SUPPRESSION SYSTEM ABOVE CEILINGS.

18. ALL SPRINKLER HEADS SHALL BE UL LISTED AND APPROVED FOR INTENDED OCCUPANCY AND USE IN FIRE PROTECTION SYSTEMS.

19. SPRINKLER HEADS SHALL BE INSTALLED IN CENTERS OF ANY ACOUSTICAL CEILING TILES OR PANELS. THIS IS A REQUIREMENT FOR RETURN BENDS. AT THE CONTRACTORS DISCRETION, FM-GLOBAL APPROVED FLEXIBLE SPRINKLER DROPS MAY BE USED IN LIEU OF CONVENTIONAL HARD-PIPED RETURN BENDS. REGARDLESS, SPRINKLER HEADS SHALL ALIGN WITHIN ANY GIVEN ROOM OR COMPARTMENT FOR VISUAL IMPACT. PROVIDE ADDITIONAL SPRINKLER HEADS IF NECESSARY TO COMPLY WITH THIS REQUIREMENT. EXCEPTION: SPRINKLER HEADS IN CLOSETS, STORAGE ROOMS AND JANITORS CLOSETS DO NOT HAVE TO BE LOCATED IN CENTERS OF TILES, BUT THEY SHALL BE LOCATED NO CLOSER TO T-BAR, CEILING MOUNTED FIXTURES OR OTHER EQUIPMENT THAN SIX INCHES (0'- 6").

20. THE FACILITY IS TO BE BUILT FROM WOOD, THEREFORE THERE WILL BE COMBUSTIBLE BLIND SPACES. PROVIDE FIRE SPRINKLER PROTECTION IN ALL COMBUSTIBLE BLIND SPACES AS PER NFPA 13. IT MAY BE PRUDENT TO ROUTE A COMPLETE, SEPARATE COMPLIMENT OF PIPING HIGHER, NEAR THE ROOD DECK, THROUGH THE WEBBING OF TRUSSES, AND ANOTHER LEVEL CLOSER TO THE CEILING. FINAL DESIGN IS UP TO THE INSTALLING, STATE LICENSED FIRE PROTECTION CONTRACTOR, BUT THE FIRE PROTECTION PIPING SHALL BE COORDINATED WITH ALL ABOVE-CEILING HVAC ELEMENTS, CONDUITS, CABLE TRAYS, ETC., WITH LONG RISERS AND LONG SPRIG-UPS SUPPORTED AS REQUIRED BY NFPA 13.

21. REFER TO ELECTRICAL AND MECHANICAL SCHEDULES FOR ANY CEILING / SURFACE MOUNTED EQUIPMENT THAT MAY BE AN OBSTRUCTION TO SPRINKLER DISCHARGE. ALSO, REFER TO ARCHITECTURAL PLANS FOR MILLWORK, FURNITURE, APPLIANCES, OWNERS EQUIPMENT (LIGHTING BOOMS, EQUIPMENT BOOMS, IMAGING EQUIPMENT, ABOVE-CEILING SUPPORTING SYSTEMS, ETC.) AND PROVIDE ADDITIONAL SPRINKLER HEADS AS MAY BE NECESSARY.

22. ALL SPRINKLER HEAD TEMPERATURE RATINGS SHALL BE AS PER THE REQUIREMENTS OF NFPA 13. THE FIRE PROTECTION CONTRACTOR IS CAUTIONED TO REVIEW LOCATIONS OF SPRINKLER HEADS WITH REGARD TO DIFFUSERS, MECHANICAL EQUIPMENT, WINDOWS, ETC., WHEN SELECTING TEMPERATURE RATINGS.

23. SPRINKLER HEADS INSTALLED IN FINISHED CEILINGS SHALL BE UL LISTED AND APPROVED, QUICK RESPONSE, PENDENT SPRINKLER HEADS, WITH 2-PIECE SEMI-RECESSED ESCUTCHEON PLATES. SPRINKLER HEADS AND ESCUTCHEONS SHALL BE WHITE FINISH.

24. SPRINKLER HEADS INSTALLED IN AREAS WITHOUT CEILINGS, ABOVE CEILINGS OR OPEN TO STRUCTURE SHALL BE UL LISTED AND APPROVED, QUICK RESPONSE, UPRIGHT SPRINKLER HEADS. SPRINKLER HEADS TO BE STANDARD BRASS FINISH. CONSIDER INSTALLING MINIMUM 200°F RATED SPRINKLERS IN COMBUSTIBLE SPACES DUE TO HIGH SUMMER TEMPERATURES.

25. PROVIDE AUTOMATIC SPRINKLER PROTECTION AS FOLLOWS:

    - THROUGHOUT OFFICES, LOBBIES, RESTROOMS, EXAM ROOMS, CORRIDORS, ETC., DESIGNED TO PROVIDE A DENSITY OF .10 GPM / SQ.FT. OVER THE MOST REMOTE 1,500 SQ.FT. WITH A 100 GPM HOSE WATER ALLOWANCE. SPRINKLER HEAD SPACING NOT TO EXCEED MAXIMUM 225 SQ. FT. PER SPRINKLER.

    - THROUGHOUT JANITOR CLOSETS, STORAGE ROOMS, MECHANICAL ROOMS, ELECTRICAL ROOMS, ETC., DESIGNED TO PROVIDE A DENSITY OF .20 GPM / SQ.FT. OVER THE MOST REMOTE 1,500 SQ.FT. WITH A 250 GPM HOSE WATER ALLOWANCE. SPRINKLER HEAD SPACING NOT TO EXCEED MAXIMUM 130 SQ. FT. PER SPRINKLER. FOR COMBUSTIBLE BLIND SPACES, REDUCE SPRINKLER HEAD SPACING TO MAXIMUM 120 SQ. FT. REFER TO NFPA 13 FOR GUIDANCE WHEN SPACING SPRINKLERS BENEATH SLOPED ROOFS.

26. ALL TRAPPED PIPING SHALL BE DRAINABLE. THERE MAY BE INSTANCES WHERE THE FIRE PROTECTION INSTALLATION SHALL HAVE TO BE ROUTED "UP-OVER-DOWN", "DOWN-UNDER-UP" OR OTHERWISE AROUND HVAC SYSTEMS, STRUCTURAL MEMBERS, ETC. PROVIDE MEANS FOR DRAINAGE AS PER NFPA 13. INDIVIDUAL DRAINS THAT REMOVE LARGE QUANTITIES OF WATER SHALL DISCHARGE TO FLOOR DRAINS OR EXTERIOR DISCHARGE WHERE THERE IS NO OTHER OPTION. ANY AUXILIARY DRAINS MAY HAVE PLUGS OR NIPPLES & CAPS INSTALLED WHERE THERE ARE ONLY SMALL AMOUNTS OF TRAPPED WATER.

27. PROVIDE ACCESS PANELS WHERE NECESSARY TO ACCESS FIRE PROTECTION VALVES & EQUIPMENT; WHETHER FOR TESTING, MAINTENANCE, INSPECTION OR DRAINAGE. ACCESS PANELS SHALL BE RATED TO MATCH THE WALL OR CEILING IN WHICH THEY ARE INSTALLED AND TO BE OF SUFFICIENT SIZE TO FACILITATE WORK. ACCESS PANELS SHALL BE THE RESPONSIBILITY OF THE FIRE PROTECTION CONTRACTOR.

28. WHEREVER FINISHED CEILINGS EXIST IN THIS PROJECT, THE FIRE PROTECTION SYSTEMS INSTALLATION SHALL BE INSTALLED ABOVE SAID CEILINGS TO PROVIDE A CONCEALED INSTALLATION. UNDER NO CIRCUMSTANCES SHALL THE FIRE PROTECTION SYSTEMS INSTALLATION BE INSTALLED EXPOSED.

29. PAINT EXPOSED FIRE PROTECTION PIPING IN MECHANICAL AND ELECTRICAL ROOMS OSHA RED. PAINTING SHALL BE THE RESPONSIBILITY OF THE FIRE PROTECTION CONTRACTOR.

30. PROVIDE PROTECTION FOR SPRINKLER HEADS IN AREAS WHERE THE CEILING OR SURROUNDING AREA IS TO BE PAINTED. FIRE PROTECTION CONTRACTOR SHALL BE RESPONSIBLE TO PROVIDE AND REMOVE SPRINKLER PROTECTIONS AFTER PAINTING IS COMPLETE. ANY SPRINKLER HEAD WITH PAINT OR TEXTURE OVERSPRAY SHALL BE REPLACED BY THE FIRE PROTECTION CONTRACTOR AT NO ADDITIONAL EXPENSE TO THE OWNER, ARCHITECT OR ENGINEER OF RECORD.

31. PROVIDE HEAD GUARDS ON ALL SPRINKLER HEADS AT OR BELOW AN ELEVATION OF 7'- 6" AFF, OR THAT OTHERWISE MAY BE SUBJECT TO MECHANICAL DAMAGE, SUCH AS THOSE AROUND ATTIC ACCESSES, IN MECHANICAL & ELECTRICAL ROOMS, ABOVE SHELVING, ETC.

32. FIRE PROTECTION PLANS SHALL BE SUBMITTED TO THE ARCHITECT (BY MEANS OF THE GENERAL CONTRACTOR), OWNERS INSURANCE UNDERWRITER, CITY FIRE MARSHAL, CITY WATER DEPARTMENT, ARIZONA STATE HEALTH DEPARTMENT, AND ANY OTHER TRIBAL, LOCAL AND STATE AUTHORITIES AS MAY BE REQUIRED.

33. PROJECT SEISMIC DESIGN CATEGORY IS "**B**". SEISMIC BRACING SHALL NOT BE REQUIRED FOR THE FIRE PROTECTION SYSTEMS.

34. UNDER NO CIRCUMSTANCES SHALL ANTI-FREEZE, CORROSION INHIBITORS OR ANY OTHER CHEMICAL ADDITIVES SHALL BE INTRODUCED INTO THE FIRE PROTECTION SYSTEMS. THIS SHALL NOT BE ACCEPTED OR TOLERATED UNDER ANY CIRCUMSTANCES.

35. FIRE PROTECTION SYSTEMS, PIPING, VALVES AND ACCESSORIES INDICATED ON THE DRAWINGS ARE DIAGRAMMATIC ONLY. THE FIRE PROTECTION CONTRACTOR IS RESPONSIBLE TO VERIFY EQUIPMENT SELECTIONS (I.E. SIZE OF BACKFLOW PREVENTER), PIPE ROUTINGS, SPRINKLER HEAD LOCATIONS, COORDINATION, ETC. FOR FIT, ADEQUACY, CODE COMPLIANCE, OWNERS INSURANCE UNDERWRITER COMPLIANCE, AS WELL AS ARCHITECTURAL & STRUCTURAL CONFORMITY. THE FIRE PROTECTION CONTRACTOR SHALL THOROUGHLY SURVEY THE PROPERTY AND REVIEW ALL CIVIL, ARCHITECTURAL, STRUCTURAL, BUILDING MANUFACTURER, MECHANICAL DUCTWORK AND PIPING, DOMESTIC WATER SYSTEMS, GAS PIPING, ELECTRICAL AND ALL OTHER CONSTRUCTION DOCUMENTS PRIOR TO BID. THERE MAY BE LIMITED SPACE AVAILABLE FOR PIPE ROUTING.

36. REFER TO COMPLETE SET OF PROJECT DOCUMENTS (ALL PLANS AND ALL SPECIFICATIONS), FOR ADDITIONAL INFORMATION AND REQUIREMENTS.

37. CONTRACTORS SHALL SUBMIT RFI'S TYPED ON COMPANY LETTERHEAD TO THE ARCHITECT AND ENGINEER BY MEANS OF THE GENERAL CONTRACTOR. IT SHALL NOT BE ACCEPTABLE TO CONTACT THE ARCHITECT OR ENGINEER DIRECTLY.

BTME FIRE PROTECTION CONSTRUCTION DOCUMENTS:

THE FIRE PROTECTION CONSTRUCTION DOCUMENTS PROVIDED HEREIN ARE PERFORMANCE DESIGN DOCUMENTS. THAT IS TO STAY THESE FIRE PROTECTION DOCUMENTS ARE INTENDED TO PROVIDE MINIMUM DESIGN INTENT.

THESE DOCUMENTS MAY SHOW: UNDERGROUND MAINS (WATER AND FIRE DEPARTMENT CONNECTION SERVICE), FIRE RISER ASSEMBLIES, FEED MAINS, ETC. SIZES AND ROUTINGS OF THE CROSS MAINS SHALL BE DETERMINED BY THE INSTALLING FIRE SPRINKLER CONTRACTOR. COORDINATE ALL UNDERGROUND WORK WITH THE CIVIL ENGINEER OF RECORD.

THE INSTALLING FIRE PROTECTION CONTRACTOR WILL NEED TO THOROUGHLY REVIEW THE COMPLETE DRAWING SET. THE BUILDING IS COMBUSTIBLE CONSTRUCTION WITH COMBUSTIBLE BLIND SPACES - PROVIDE ABOVE AND BELOW CEILING PROTECTION AS PER NFPA 13. ASCERTAIN IF ANY AREAS MAY BE SUBJECT TO FREEZING AND UTILIZE DRY-TYPE SPRINKLERS AS MAY BE REQUIRED. IF ANY QUESTIONS OR CONCERNS ARISE DURING THE BIDDING OR DESIGN PHASES, SUBMIT A FORMAL, WRITTEN R.F.I. TO THE ARCHITECT OF RECORD. FAILURE TO DO SO SHALL NOT CONSTITUTE GROUNDS FOR AN EXTRA DURING THE INSTALLATION PHASE OF THE PROJECT.

COORDINATE WITH ALL OTHER DISCIPLINES AT ALL TIMES, ESPECIALLY THE STRUCTURAL PLANS AND MECHANICAL CONTRACTOR, AS THERE WILL BE LIMITED SPACE ABOVE CEILINGS IN SOME AREAS.

NOTICE TO FIRE PROTECTION CONTRACTORS:

THE FIRE PROTECTION SYSTEM DESIGNER IS CAUTIONED TO CAREFULLY COORDINATE AND CONSIDER ROUTINGS OF ALL FIRE PROTECTION PIPES AND LOCATIONS OF FIRE SPRINKLER HEADS WITH ALL OTHER DISCIPLINES (ALL STRUCTURAL ELEMENTS, HVAC DUCTWORK, ALL ABOVE CEILING PIPING SYSTEMS, LIGHT FIXTURES, CABLE TRAYS, CONDUITS, DOMESTIC WATER, STORM DRAINS, GAS LINES, MEDICAL BOOMS, EQUIPMENT SUPPORT SYSTEMS, ETC.), AS THERE WILL BE LIMITED SPACE ABOVE CEILINGS. THE SHORTEST ROUTE / DISTANCE BETWEEN ANY TWO POINTS MAY NOT BE THE ACCEPTABLE ROUTE, DUE TO CONSTRUCTION FEATURES OR CONFLICTS WITH OTHER DISCIPLINES. THE FIRE PROTECTION DESIGNER IS CAUTIONED TO PERFORM A THOROUGHLY COORDINATED DESIGN. CAREFULLY REVIEW ALL PROJECT DRAWINGS AND DETAILS DURING DESIGN OF THE FIRE PROTECTION SYSTEMS.

THE INSTALLING FIRE PROTECTION CONTRACTOR SHALL BE RESPONSIBLE FOR COORDINATING WITH THE GENERAL CONTRACTOR AND OTHER TRADES PRIOR TO FABRICATION AND DURING INSTALLATION. GREAT CARE AND GOOD CRAFTSMANSHIP DURING INSTALLATION IS EXPECTED AT ALL TIMES TO AVOID UNNECESSARY AND UNWANTED DAMAGE TO ANY PART OR FEATURE OF THE BUILDING. THE INSTALLING CONTRACTOR IS CAUTIONED TO VERIFY ANY AND ALL PENETRATIONS PRIOR TO CUTTING OR DRILLING HOLES FOR PIPES. THE FIRE PROTECTION CONTRACTOR IS FURTHER CAUTIONED TO PRE-DRILL HOLES FOR HANGER ATTACHMENTS, SO AS TO NOT SPLIT, CRACK OR OTHERWISE DAMAGE ANY STRUCTURAL MEMBERS AND ESPECIALLY TO CONCRETE SLABS AND STRUCTURAL WOOD ELEMENTS. PENETRATIONS OF STRUCTURAL MEMBERS IS STRICTLY PROHIBITED WITHOUT A PROPERLY EXECUTED, WRITTEN APPROVAL FROM THE STRUCTURAL ENGINEER OF RECORD. IT MAY BE NECESSARY FOR PIPES TO DROP DOWN, GO UNDER AND RISE UP AT BEAMS, TRUSSES, OTHER STRUCTURAL FEATURES OR OTHER BUILDING SYSTEMS. AT ALL TIMES THIS SHALL BE AT THE FIRE PROTECTION CONTRACTOR'S EXPENSE. THE FIRE PROTECTION CONTRACTOR IS CAUTIONED TO COORDINATE WITH ALL OTHER DISCIPLINES.

THE FIRE PROTECTION RISER ASSEMBLY AND ALL PIPING SHOWN WITHIN THESE CONSTRUCTION DOCUMENTS HAS BEEN PREPARED TO PROVIDE ADEQUATE CLEARANCES TO FACILITATE INSPECTION, TESTING, MAINTENANCE AND REMOVAL OF EQUIPMENT. THE FIRE PROTECTION CONTRACTOR SHALL INSTALL THE BACKFLOW PREVENTER, MANIFOLD AND RISERS AS SHOWN HEREIN WITH NO DEVIATIONS ALLOWED. A 6" NOMINAL BACKFLOW PREVENTION ASSEMBLY, MANIFOLD AND RISERS HAVE BEEN SHOWN AND COORDINATED HEREIN TO FACILITATE FUTURE BUILDING PHASES AND GROWTH AND 6" EQUIPMENT SHALL BE INSTALLED. REDUCTIONS IN PIPE SIZES SHALL BE ALLOWED AT THE TOP OF THE RISERS OR AT A LOCATION FURTHER DOWNSTREAM OF THE SYSTEM RISERS. REDUCING VALVE SIZES AND INCREASING SIZES OF DOWNSTREAM MAINS SHALL NOT BE PERMITTED!

WARNING: IF THE INSTALLING CONTRACTOR CHOOSES TO USE AND INSTALL FLEXIBLE SPRINKLER DROPS, THEY SHALL BE INSTALLED IN ACCORDANCE WITH THEIR LISTING AND MANUFACTURERS INSTRUCTIONS. ATTENTION SHALL BE PAID TO BOTH THE *RADIUS* OF EACH BEND THAT MAY BE IN ANY SINGLE FLEXIBLE DROP, AS WELL AS THE *TOTAL NUMBER* OF BENDS INSTALLED IN ANY SINGLE FLEXIBLE DROP THAT MAY BE INSTALLED. THIS SHALL BE CLOSELY SCRUTINIZED IN THE FIELD DURING INSTALLATION. CONTRACTORS SHALL REPLACE EVERY FLEXIBLE DROP THAT IS DEEMED NOT TO BE INSTALLED ACCORDING TO ITS LISTING AND APPROVAL AND BERNHARD SHALL HAVE THE FINAL WORD ON WHETHER OR NOT FLEXIBLE SPRINKLER DROPS ARE INSTALLED ACCORDING TO THEIR LISTING. ANY FLEXIBLE SPRINKLER DROPS DEEMED TO BE INSTALLED INCORRECTLY SHALL BE REPLACED WITH LONGER, APPROPRIATE LENGTH FLEXIBLE DROPS, OR REPLACED WITH HARD-PIPED RETURN BENDS. IN EVERY INSTANCE, THIS SHALL BE AT THE CONTRACTORS EXPENSE. CONTRACTORS ARE CAUTIONED NOT TO TRY AND USE SHORT FLEXIBLE SPRINKLER DROPS TO "GET BY", WHEN A LONGER FLEXIBLE SPRINKLER DROP IS WHAT THE INSTALLATION REQUIRES.

AUTOMATIC AIR VENT AND RELIEF VALVE:

PROVIDE THE FOLLOWING PER THE REQUIREMENTS OF NFPA 13:

1. AN AUTOMATIC AIR VENT LOCATED ON THE TOP TANGENT OF A NEW FIRE PROTECTION SYSTEM PIPE, AT A HIGH POINT IN THE SYSTEM PIPING NETWORK.

2. AN AUTOMATIC RELIEF VALVE ON THE FIRE PROTECTION SYSTEM. LOCATE RELIEF VALVE AT AN APPROPRIATE LOCATION TO FACILITATE DRAINAGE AND NOT INTERFERE WITH THE OWNERS OPERATIONS.

WATER FLOW TEST:

STATIC PRESSURE - 76 PSI
RESIDUAL PRESSURE - 40 PSI
MEASURED FLOW: 1,060 GPM
DATE: JUNE 7, 2021
LOCATION: HYDRANT LOCATED SOUTHEAST OF S.S.B. BUILDING.

NOTE: THIS WATER FLOW TEST FOR BID PURPOSES ONLY. OBTAIN CURRENT WATER FLOW TEST INFORMATION FROM THE GOVERNING AHJ TO VERIFY THERE HAS BEEN NO SIGNIFICANT CHANGES IN THE WATER SUPPLY.

COMBUSTIBLE CONCEALED CONSTRUCTION:

THIS BUILDING UTILIZES COMBUSTIBLE FRAMING MEMBERS AND, THEREFORE, SHALL BE CONSIDERED AS COMBUSTIBLE CONCEALED CONSTRUCTION AS DEFINED BY NFPA 13. PROVIDE SPRINKLER PROTECTION ABOVE ALL FINISHED CEILINGS AS REQUIRED BY NFPA 13. LOCATIONS OF SPRINKLER HEADS ABOVE CEILINGS SHALL REQUIRED CLOSE COORDINATION WITH ALL ABOVE CEILING SYSTEMS, ESPECIALLY STRUCTURAL BEAMS, JOISTS AND TRUSSES, AS WELL AS THE STRUCTURAL DIAGONAL/ WEBBING MEMBERS. ADDITIONALLY, CLOSELY COORDINATED WITH MECHANICAL HVAC DUCTWORK, STORM DRAINS, CONDUIT BANKS, CABLE TRAYS, ETC. THE FIRE PROTECTION CONTRACTOR SHALL BE ADVISED THAT SAID COORDINATION MAY RESULT IN ADDITIONAL HEADS BEING REQUIRED DUE TO LIMITED SPACED AND OBSTRUCTIONS TO SPRINKLER HEAD DISCHARGE CREATED BY THE AFOREMENTIONED STRUCTURAL ELEMENTS, DUCTWORK AND OTHER BUILDING ELEMENTS & SYSTEMS THAT ARE ALSO ABOVE CEILINGS.

JSRa
JOHNSON SMITTHIPONG & ROSAMOND ASSOCIATES, INC.
5210 E Williams Cir • Ste 600 • Tucson, AZ 85711
(520) 547-7904 • www.jsrarchinc.com

Consultants:

Bernhard TME Engineering

STATE OF ARIZONA 54000 MARK A. ALVAREZ 11/03/22 Expires 12/31/23

WHITERIVER ADMINISTRATION OFFICE BUILDING

200 W HOSPITAL DR
WHITERIVER, AZ 85941

HHSI102201800007I

U. S. DEPARTMENT OF HEALTH AND HUMAN SERVICES
INDIAN HEALTH SERVICE
PHOENIX AREA OFFICE

No.	Date	Description

Issue Date:	11/3/2022
Project No:	21-020
Scale:	1/8" = 1'-0"
Drawn By:	GS
Checked By:	MA

FINAL CD

Sheet Title:

GENERAL NOTES - FIRE PROTECTION

Sheet Number:

F001

Autodesk Docs://21-020 Whiteriver Admin v2022/21-020 10 MEP WRMOB 2022.rvt
11/2/2022 9:04:23 AM

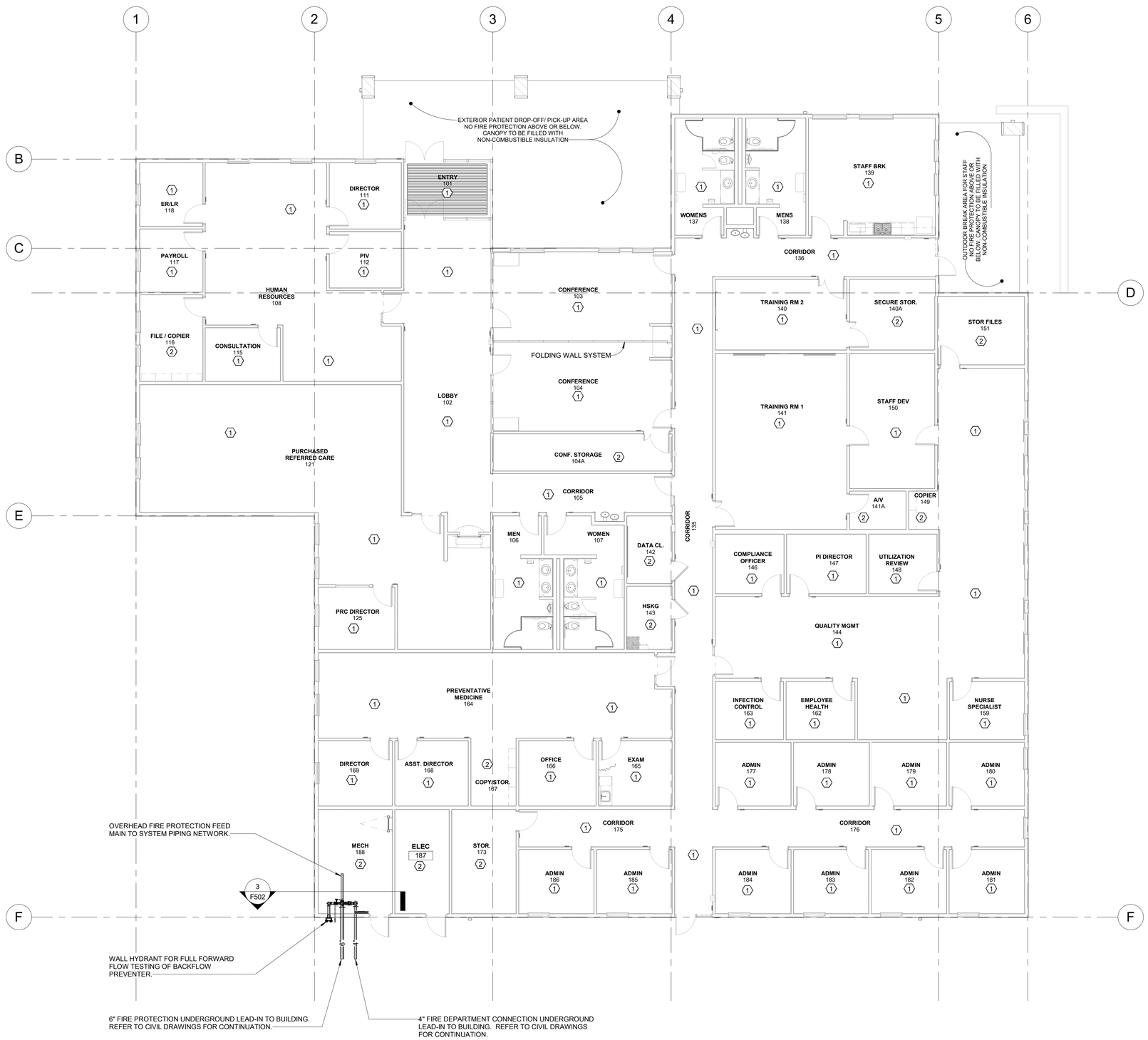

1 FIRE PROTECTION FLOOR PLAN
1/8" = 1'-0"

NOTICE TO FIRE PROTECTION CONTRACTORS:

THE FIRE PROTECTION SYSTEM DESIGNER IS CAUTIONED TO CAREFULLY COORDINATE AND CONSIDER ROUTINGS OF ALL FIRE PROTECTION PIPES AND LOCATIONS OF FIRE SPRINKLER HEADS WITH ALL OTHER DISCIPLINES (ALL STRUCTURAL ELEMENTS, HVAC DUCTWORK, ALL ABOVE CEILING PIPING SYSTEMS, LIGHT FIXTURES, CABLE TRAYS, CONDUITS, DOMESTIC WATER, STORM DRAINS, GAS LINES, MEDICAL BOOMS, EQUIPMENT SUPPORT SYSTEMS, ETC.), AS THERE WILL BE LIMITED SPACE ABOVE CEILINGS. THE SHORTEST ROUTE / DISTANCE BETWEEN ANY TWO POINTS MAY NOT BE THE ACCEPTABLE ROUTE, DUE TO CONSTRUCTION FEATURES OR CONFLICTS WITH OTHER DISCIPLINES. THE FIRE PROTECTION DESIGNER IS CAUTIONED TO PERFORM A THOROUGHLY COORDINATED DESIGN . CAREFULLY REVIEW ALL PROJECT DRAWINGS AND DETAILS DURING DESIGN OF THE FIRE PROTECTION SYSTEMS.

THE INSTALLING FIRE PROTECTION CONTRACTOR SHALL BE RESPONSIBLE FOR COORDINATING WITH THE GENERAL CONTRACTOR AND OTHER TRADES PRIOR TO FABRICATION AND DURING INSTALLATION. GREAT CARE AND GOOD CRAFTSMANSHIP DURING INSTALLATION IS EXPECTED AT ALL TIMES TO AVOID UNNECESSARY AND UNWANTED DAMAGE TO ANY PART OR FEATURE OF THE BUILDING. THE INSTALLING CONTRACTOR IS CAUTIONED TO VERIFY ANY AND ALL PENETRATIONS PRIOR TO CUTTING OR DRILLING HOLES FOR PIPES. THE FIRE PROTECTION CONTRACTOR IS FURTHER CAUTIONED TO PRE-DRILL HOLES FOR HANGER ATTACHMENTS, SO AS TO NOT SPLIT, CRACK OR OTHERWISE DAMAGE ANY STRUCTURAL MEMBERS AND ESPECIALLY TO CONCRETE SLABS AND STRUCTURAL WOOD ELEMENTS. PENETRATIONS OF STRUCTURAL MEMBERS IS STRICTLY PROHIBITED WITHOUT A PROPERLY EXECUTED, WRITTEN APPROVAL FROM THE STRUCTURAL ENGINEER OF RECORD. IT MAY BE NECESSARY FOR PIPES TO DROP DOWN, GO UNDER AND RISE UP AT BEAMS, TRUSSES, OTHER STRUCTURAL FEATURES OR OTHER BUILDING SYSTEMS. AT ALL TIMES THIS SHALL BE AT THE FIRE PROTECTION CONTRACTOR'S EXPENSE. THE FIRE PROTECTION CONTRACTOR IS CAUTIONED TO COORDINATE WITH ALL OTHER DISCIPLINES.

THE FIRE PROTECTION RISER ASSEMBLY AND ALL PIPING SHOWN WITHIN THESE CONSTRUCTION DOCUMENTS HAS BEEN PREPARED TO PROVIDE ADEQUATE CLEARANCES TO FACILITATE INSPECTION, TESTING, MAINTENANCE AND REMOVAL OF EQUIPMENT. THE FIRE PROTECTION CONTRACTOR SHALL INSTALL THE BACKFLOW PREVENTER, MANIFOLD AND RISERS AS SHOWN HEREIN WITH NO DEVIATIONS ALLOWED. A 6" NOMINAL BACKFLOW PREVENTION ASSEMBLY, MANIFOLD AND RISERS HAVE BEEN SHOWN AND COORDINATED HEREIN TO FACILITATE FUTURE BUILDING PHASES AND GROWTH AND 6" EQUIPMENT SHALL BE INSTALLED. REDUCTIONS IN PIPE SIZES SHALL BE ALLOWED AT THE TOP OF THE RISERS OR AT A LOCATION FURTHER DOWNSTREAM OF THE SYSTEM RISERS. REDUCING VALVE SIZES AND INCREASING SIZES OF DOWNSTREAM MAINS SHALL NOT BE PERMITTED!

WARNING: IF THE INSTALLING CONTRACTOR CHOOSES TO USE AND INSTALL FLEXIBLE SPRINKLER DROPS, THEY SHALL BE INSTALLED IN ACCORDANCE WITH THEIR LISTING AND MANUFACTURERS INSTRUCTIONS. ATTENTION SHALL BE PAID TO BOTH THE *RADIUS* OF EACH BEND THAT MAY BE IN ANY SINGLE FLEXIBLE DROP, AS WELL AS THE *TOTAL NUMBER* OF BENDS INSTALLED IN ANY SINGLE FLEXIBLE DROP THAT MAY BE INSTALLED. THIS SHALL BE CLOSELY SCRUTINIZED IN THE FIELD DURING INSTALLATION. CONTRACTORS SHALL REPLACE EVERY FLEXIBLE DROP THAT IS DEEMED NOT TO BE INSTALLED ACCORDING TO ITS LISTING AND APPROVAL AND BERNHARD SHALL HAVE THE FINAL WORD ON WHETHER OR NOT FLEXIBLE SPRINKLER DROPS ARE INSTALLED ACCORDING TO THEIR LISTING. ANY FLEXIBLE SPRINKLER DROPS DEEMED TO BE INSTALLED INCORRECTLY SHALL BE REPLACED WITH LONGER, APPROPRIATE LENGTH FLEXIBLE DROPS, OR REPLACED WITH HARD-PIPED RETURN BENDS. IN EVERY INSTANCE, THIS SHALL BE AT THE CONTRACTORS EXPENSE. CONTRACTORS ARE CAUTIONED NOT TO TRY AND USE SHORT FLEXIBLE SPRINKLER DROPS TO "GET BY", WHEN A LONGER FLEXIBLE SPRINKLER DROP IS WHAT THE INSTALLATION REQUIRES.

KEYED NOTES:

1. THIS SPACE SHALL BE CONSIDERED LIGHT HAZARD OCCUPANCY CLASSIFICATION. UTILIZE MINIMUM 5.6 K-FACTOR SPRINKLERS AT A MAXIMUM SPACING OF 225 FT² PER SPRINKLER. SPRINKLERS ARE REQUIRED TO BE LOCATED IN CENTERS OF TILES.
2. THIS SPACE SHALL BE CONSIDERED ORDINARY HAZARD OCCUPANCY CLASSIFICATION. UTILIZE MINIMUM 5.6 K-FACTOR SPRINKLERS AT A MAXIMUM SPACING OF 130 FT² PER SPRINKLER. SPRINKLERS ARE REQUIRED TO BE LOCATED IN CENTERS OF TILES.

GENERAL SHEET NOTES:

1. THE FACILITY IS COMBUSTIBLE CONSTRUCTION WITH COMBUSTIBLE BLIND SPACES. PROVIDE FIRE SPRINKLER PROTECTION ABOVE CEILINGS AS PER NFPA 13.
2. THESE SPACES SHALL BE CONSIDERED ORDINARY HAZARD. UTILIZE MINIMUM 5.6 K-FACTOR SPRINKLERS AT A MAXIMUM SPACING OF 120 FT² PER SPRINKLER. REFER TO NFPA 13 FOR GUIDANCE ON SPACING SPRINKLERS BENEATH SLOPED ROOFS.
3. COORDINATE CLOSELY WITH STRUCTURAL TRUSSES AND THEIR WEBBING; WITH ROOF OPENINGS FOR MECHANICAL AIR UNITS; MECHANICAL HVAC AND OTHER ABOVE-CEILING M.E.P. ELEMENTS.
4. THE PATIENT DROP-OFF CANOPY AND OUTDOOR EMPLOYEE BREAK AREA CANOPIES ARE TO BE COMPLETELY FILLED WITH NONCOMBUSTIBLE INSULATION TO ALLOW FIRE SPRINKLER PROTECTION TO BE OMITTED AS PER NFPA 13.

JSRa
JOHNSON SMITTHIPONG & ROSAMOND ASSOCIATES, INC.
5210 E Williams Cir • Ste 600 • Tucson, AZ 85711
(520) 547-7904 • www.jsrarchinc.com

Consultants:

Bernhard TME Engineering

54000 MARK. A. ALVAREZ 11/03/22 Expires 12/31/23

WHITERIVER ADMINISTRATION OFFICE BUILDING

200 W HOSPITAL DR
WHITERIVER, AZ 85941

HHSI102201800007I

U. S. DEPARTMENT OF HEALTH AND HUMAN SERVICES
INDIAN HEALTH SERVICE
PHOENIX AREA OFFICE

No.	Date	Description

Issue Date:	11/3/2022
Project No:	21-020
Scale:	1/8" = 1'-0"
Drawn By:	GS
Checked By:	MA

FINAL CD

Sheet Title:

FIRST FLOOR PLAN - FIRE PROTECTION

Sheet Number:

F101

Autodesk Docs://21-020 Whiteriver Admin \2022\21-020 10 MEP WRMOB 2022.rvt
11/2/2022 9:04:25 AM

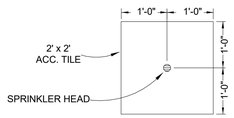

1 CENTER LINE OF 2' TILE DETAIL
NOT TO SCALE

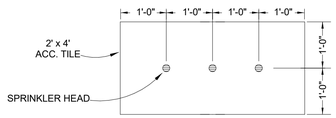

2 CENTER LINE OF 4' TILE DETAIL
NOT TO SCALE

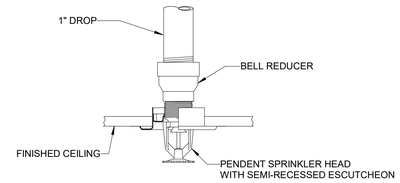

3 SEMI-RECESSED SPRINKLER HEAD DETAIL
NOT TO SCALE

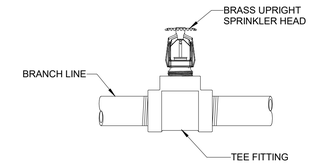

4 UPRIGHT SPRINKLER HEAD DETAIL
NOT TO SCALE

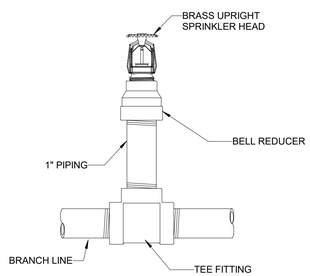

5 UPRIGHT SPRINKLER HEAD ON SPRIG DETAIL
NOT TO SCALE

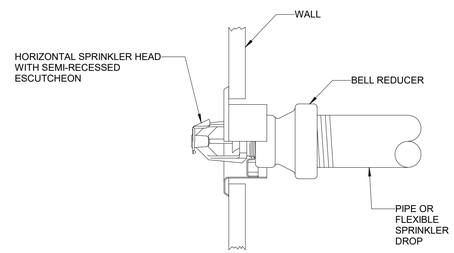

6 HORIZONTAL SIDEWALL SPRINKLER HEAD DETAIL
NOT TO SCALE

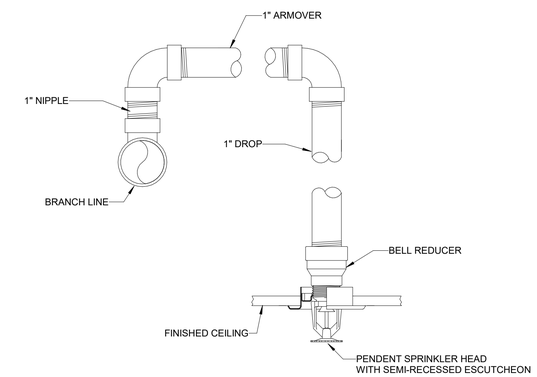

7 RETURN BEND DETAIL
NOT TO SCALE

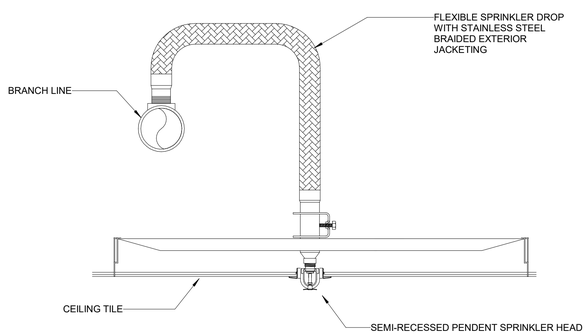

NOTES:
THIS INSTALLATION MAY BE USED IN LIEU OF THE HARD PIPE RETURN BEND INSTALLATION FOR EASE OF INSTALLATION, TENANT FLEXIBILITY, OWNER, OR SPECIFIC SPRINKLER HEAD LOCATION REQUIREMENTS.

INCLUDE THE EQUIVALENT PIPE LENGTH AS SPECIFIED IN THE MANUFACTURER'S PRODUCT DATA SHEETS IN THE HYDRAULIC CALCULATION REPORTS.

8 FLEXIBLE SPRINKLER DROP DETAIL
NOT TO SCALE

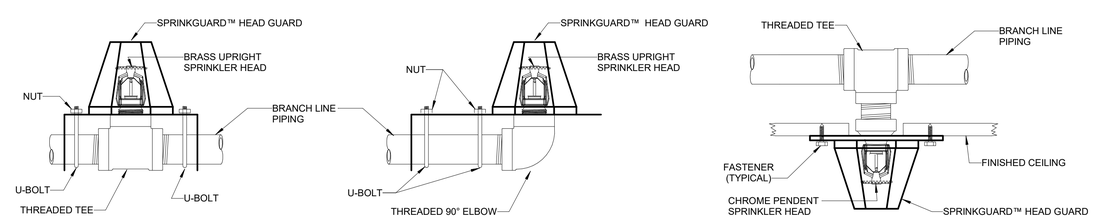

9 SPRINKGUARD™ HEAD GUARD DETAILS
NOT TO SCALE

JOHNSON SMITTHIPONG & ROSAMOND ASSOCIATES, INC.
5210 E Williams Cir • Ste 600 • Tucson, AZ 85711
(520) 547-7904 • www.jsrarchinc.com

Consultants:
Bernhard TME Engineering

WHITERIVER ADMINISTRATION OFFICE BUILDING

200 W HOSPITAL DR
WHITERIVER, AZ 85941

HHSI102201800007I

U. S. DEPARTMENT OF HEALTH AND HUMAN SERVICES
INDIAN HEALTH SERVICE
PHOENIX AREA OFFICE

No.	Date	Description

Issue Date:	11/3/2022
Project No:	21-020
Scale:	As indicated
Drawn By:	GS
Checked By:	MA

FINAL CD

Sheet Title:
DETAILS - FIRE PROTECTION

Sheet Number:
F501

Autodesk Docs://21-020 Whiteriver Admin v2022/21-020 10 MEP WRMOB 2022.rvt
11/2/2022 9:04:25 AM

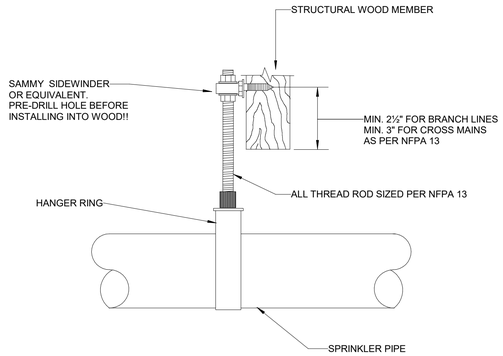

1 WOOD HANGER DETAIL
NOT TO SCALE

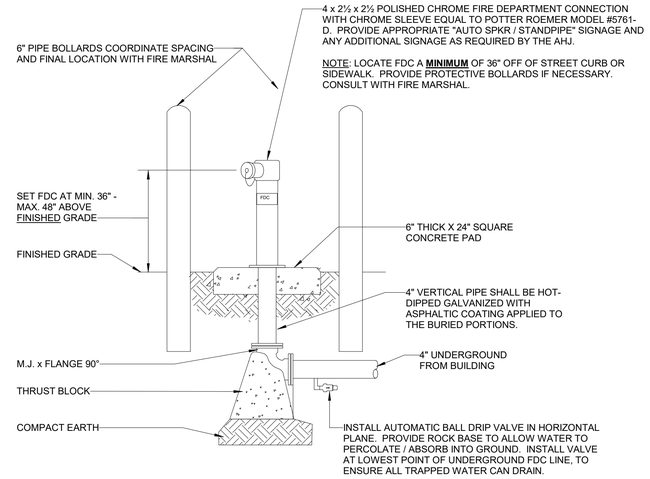

2 FREE-STANDING FIRE DEPT. CONNECTION DETAIL
NOT TO SCALE

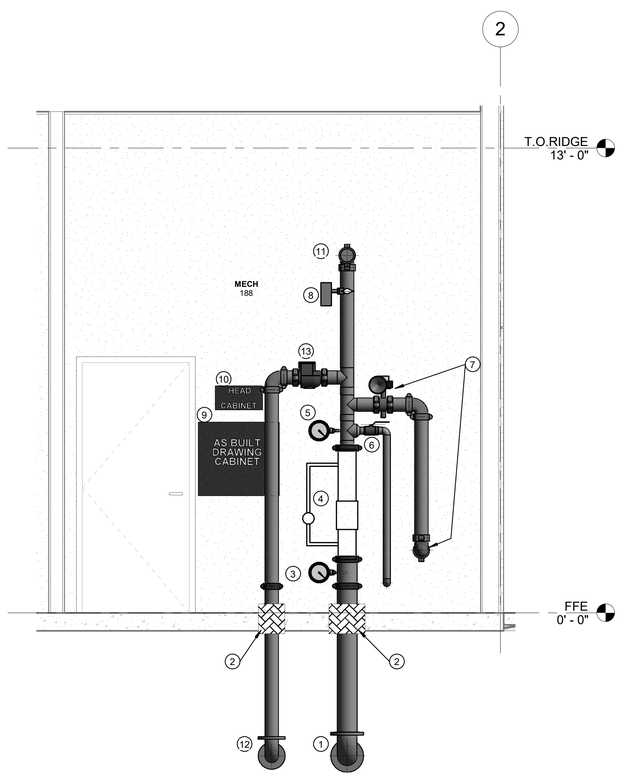

3 FIRE PROTECTION RISER - LOOKING SOUTH
1/2" = 1'-0"

LEGEND:

1. 6" UNDERGROUND SERVICE MAIN LEAD-IN TO MECHANICAL ROOM.
2. SLEEVE AND LINK-SEAL AT SLAB PENETRATION.
3. WATER PRESSURE GAUGE - SUPPLY SIDE .
4. 6" DOUBLE DETECTOR CHECK VALVE ASSEMBLY WITH BYPASS METER IN U.S. GALLONS, BUTTERFLY CONTROL VALVES AND SUPERVISORY SWITCHES. ASSEMBLY IS IN VERTICAL POSITION. VALVES SUPERVISED NORMALLY OPEN.
5. WATER PRESSURE GAUGE - SYSTEM SIDE .
6. 2" MAIN DRAIN WITH PRESSURE RELIEF VALVE.
7. FORWARD FLOW TEST ASSEMBLY. PROVIDE 4 x 2½ x 2½ WALL HYDRANT. PROVIDE "TEST HYDRANT" SIGNAGE. HYDRANT TO BE PLAIN BRASS FINISH. CONTROL VALVE TO BE SUPERVISED NORMALLY CLOSED.
8. WATER FLOW SWITCH.
9. AS-BUILT DRAWINGS CABINET WITH COPY OF NFPA 25, COMPLETED, ACCURATE AS-BUILT DRAWINGS, COMPLETED TEST CERTIFICATES, ETC.
10. SPARE SPRINKLER HEAD CABINET WITH STOCK OF SPARE SPRINKLERS AND MANUFACTURERS ORIGINAL INSTALLATION WRENCH(ES).
11. SYSTEM FEED MAIN.
12. 4" UNDERGROUND FIRE DEPARTMENT CONNECTION LEAD-IN TO MECHANICAL ROOM.
13. 4" FDC CHECK VALVE.

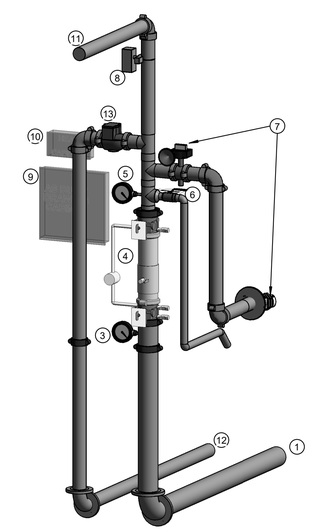

4 3D VIEW OF FIRE PROTECTION RISER

NOTE: 3D VIEWS ARE NOT TO SCALE. 3D VIEWS ARE TO SHOW INTENT AND TO PROVIDE CLARITY ONLY. SOME EQUIPMENT HAS BEEN REMOVED FROM THESE VIEWS.

JOHNSON SMITTHIPONG & ROSAMOND ASSOCIATES, INC.
5210 E Williams Cir • Ste 600 • Tucson, AZ 85711
(520) 547-7904 • www.jsrarchinc.com

Consultants:

Bernhard TME Engineering

54000 MARK A. ALVAREZ 11/03/22 Expires 12/31/23

WHITERIVER ADMINISTRATION OFFICE BUILDING

200 W HOSPITAL DR
WHITERIVER, AZ 85941

HHSI102201800007I

U. S. DEPARTMENT OF HEALTH AND HUMAN SERVICES
INDIAN HEALTH SERVICE
PHOENIX AREA OFFICE

No.	Date	Description

Issue Date:	11/3/2022
Project No:	21-020
Scale:	As indicated
Drawn By:	GS
Checked By:	MA

FINAL CD

Sheet Title:

DETAILS - FIRE PROTECTION

Sheet Number:

F502

Autodesk Docs://21-020 Whiteriver Admin v2022/21-020 10 MEP WRMOB 2022.rvt
11/2/2022 9:04:26 AM

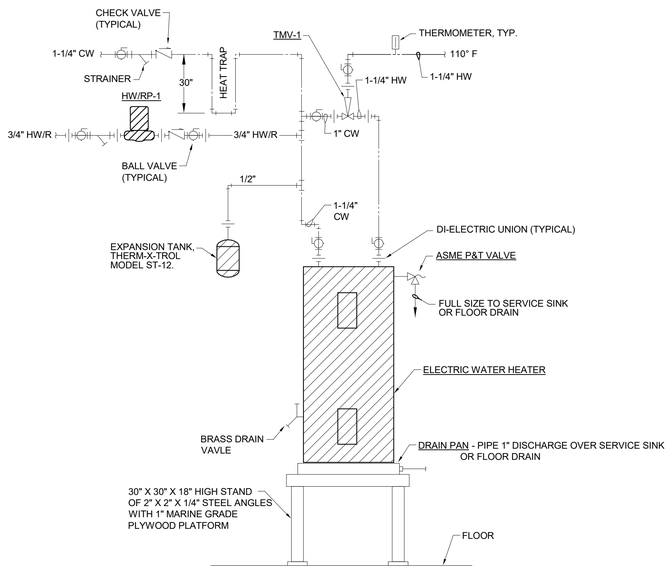

1 ELECTRIC WATER HEATER DETAIL

SCALE: NONE

PLUMBING LEGEND

SYMBOL	DESCRIPTION
	NEW EQUIPMENT
	SANITARY SEWER (SS)
	COMBINATION WASTE AND VENT (CWB)
	SANITARY VENT (V)
	STORM DRAIN (SD)
	CONDENSATE DRAIN (D)
	COLD WATER (CW)
	HOT WATER (HW)
	HOT WATER RETURN (HWR)
	BALL VALVE
	GATE VALVE
	CHECK VALVE
P-1	PLUMBING FIXTURE
VTR	VENT THRU ROOF
CO	CLEANOUT PLUG
FCO	FLOOR CLEANOUT
WCO	WALL CLEANOUT
COTG	CLEANOUT TO GRADE
FD	FLOOR DRAIN
VTR	VENT THRU ROOF
COP	CLEANOUT PLUG
FCO	FLOOR CLEANOUT
WCO	WALL CLEANOUT
COTG	CLEANOUT TO GRADE
	POINT OF CONNECTION TO EXISTING
	TERMINATION OF DEMOLITION

PLUMBING FIXTURE SCHEDULE

ITEM	FIXTURE	DESCRIPTION	TRAP	SEWER	VENT	COLD	HOT	ELECTRICAL
WC-1	WATER CLOSET ADA	AMERICAN STANDARD 3461.528 MADERA, VITREOUS CHINA, ELONGATED BOWL, FLOOR MOUNTED; TRIM: SLOAN 111 "REGAL" EXPOSED FLUSH VALVE, 1.6 GALLON FLUSH CYCLE; SEAT: CENTOCO 1500 CCSS "INSTITUTIONAL", FINISH WHITE.	INTEGRAL	3"	2"	1-1/2"	-	-
WC-2	WATER CLOSET ADA	AMERICAN STANDARD 3461.528 MADERA, VITREOUS CHINA, ELONGATED BOWL, FLOOR MOUNTED; TRIM: SLOAN WES 111 "UPPERCUT" EXPOSED FLUSH VALVE, 1.6/1.1 GALLON DUAL FLUSH; SEAT: CENTOCO 1500 CCSS "INSTITUTIONAL", FINISH WHITE.	INTEGRAL	3"	2"	1-1/2"	-	-
UR-1	URINAL	KOHLER K-4904-ET BARDON, VITREOUS CHINA, SIPHON JET, 3/4" TOP SPUD; TRIM: SLOAN ECOS 186 HW-0.25 SENSOR FLUSH VALVE, 0.25 GALLON FLUSH CYCLE; SUPPORT: ZURN Z-1222.	INTEGRAL	3"	2"	1"	-	120V HARDWIRED TO 6VAC STEP DOWN TRANSFORMER
L-1	LAVATORY ADA ACCESSIBLE	KOHLER K-2196-1 PENNINGTON, VITREOUS CHINA, OVAL BASIN, 20" X 17" SIZE, FRONT OVERFLOW, COUNTER MOUNTED; TRIM: SLOAN EBF-750 OPTIMA SENSOR SINGLE HOLE FAUCET, 10-1/4" GOODSENECK SPOUT, 6VDC PLUG ADAPTER FOR POWER, 0.35 GPM LAMINAR FLOW SPRAY; MCGUIRE 155-WC DRAIN. INSULATION KIT: TRUEBRO 103 E-Z "LAVGUARD", BELOW DECK THERMOSTATIC MIXING VALVE. PROVIDE OFFSET TAILPIECE AS REQUIRED TO MEET ADA INSTALLATION.	1-1/4"	2"	2"	1/2"	1/2"	120V PLUG FOR 6VDC PLUG ADAPTER
S-1	SINK ADA	ELKAY LRAD332160, 18 GAUGE, TYPE 304 STAINLESS STEEL DOUBLE BOWL SINK BACK DRAIN OUTLET, 33" x 21-1/4" x 6" DEEP OUTER DIMENSIONS WITH 13-1/2" x 16" x 6" BOWL DIMENSIONS, THREE FAUCET DECK HOLES. ELKAY LK-35 STRAINER; TRIM: CHICAGO FAUCETS 786-GN10AE3SWGABCP. PROVIDE OFFSET TAILPIECE AS REQUIRED TO MEET ADA INSTALLATION.	1-1/2"	2"	2"	1/2"	1/2"	-
S-2	SINK ADA	ELKAY LRAD1919, 18 GAUGE, TYPE 304 STAINLESS STEEL SINGLE BOWL SINK WITH BACK DRAIN LOCATION, 19-1/2"(SIDE TO SIDE) x 19"(FRONT TO BACK) x 5-1/2" DEEP OUTER DIMENSIONS WITH 16" (SIDE TO SIDE) x 13-1/2" x 5-1/2" BOWL DIMENSIONS, SINGLE DECK HOLE, ELKAY LK-35 STRAINER; TRIM: SLOAN EBF-750 OPTIMA SENSOR SINGLE HOLE FAUCET, 10-1/4" GOOSENECK SPOUT, 6VDC PLUG ADAPTER FOR POWER, 0.35 GPM LAMINAR FLOW, BELOW DECK THERMOSTATIC MIXING VALVE. PROVIDE OFFSET TAILPIECE AS REQUIRED TO MEET ADA INSTALLATION.	1-1/2"	2"	2"	1/2"	1/2"	120V PLUG FOR 6VDC PLUG ADAPTER
EWC-1	ELECTRIC WATER COOLER	ELKAY LZSTL8WSLP ADA BI-LEVEL WATER COOLER, EZH2O BOTTLE FILLING STATION, FILTER REFRIGERATED SUPPORT: ELKAY MLP200 IN WALL BI-LEVEL CARRIER.	2"	2"	2"	1/2"	-	115V/60 HZ FLA: 5A 370 WATTS
RIMSU-1	REFRIGERATOR ICE MAKER SUPPLY UNIT	OATEY 38688 POWDER COATED WHITE METAL BOX WITH 1/4 INCH TURN BASS BALL HAMMER VALVE WITH COPPER SWEAT CONNECTION.	-	-	-	1/2"	-	-
SS-1	SERVICE SINK	FIAT MSB-2424, ONE-PIECE MOLDED STONE, 24" X 24" X 10" SIZE, INTEGRAL DRAIN BODY, E-88-AA SS BUMPER GUARD, 889-CC MOP HANGER, 832-AA HOSE AND BRACKET, 833-AA SILICONE SEALANT; TRIM: FIAT 830-AA POLISHED CHROME SERVICE SINK FAUCET, THREADED SPOUT, PAIL HOOK, WALL BRACE, LEVER HANDLES, INTEGRAL STOPS, VACUUM BREAKER.	1-1/2"	3"	2"	3/4"	3/4"	-

NOTES:

1. SUPPLIES: FURNISH AND INSTALL ALL FIXTURE SUPPLIES COMPLETE TO INCLUDE QUARTER TURN BRASS BALL VALVE, CONVERTIBLE LOOSE KEY HANDLE, CHROME PLATED ANNEALED VERTICAL TUBE, AND CHROME PLATED CAST BRASS SET SCREW ESCUTCHEON; MCGUIRE LFBV02, UNLESS NOTED OTHERWISE.
2. P-TRAPS: FURNISH AND INSTALL ALL FIXTURE P-TRAPS COMPLETE TO INCLUDE CLEANOUT, 17-GAUGE CHROME PLATED TUBING TO WALL, AND CHROME PLATED CAST BRASS SET SCREW ESCUTCHEON; MCGUIRE 8872 (1-1/4") / MCGUIRE 8912 (1-1/2"), UNLESS NOTED OTHERWISE.

PLUMBING PIPING SPECIALTIES SCHEDULE

ITEM	FIXTURE	DESCRIPTION	SIZE	COLD	HOT
WCO	WALL CLEANOUT	ZURN Z-1441-BP-VP, CAST IRON NO-HUB CLEANOUT FERRULE, BRONZE PLUG, STAINLESS STEEL ROUND ACCESS COVER PLATE, VANDAL-PROOF SCREW.	AS NOTED	-	-
FCO	FLOOR CLEANOUT	ZURN ZN-1400-BP-VP "LEVEL-TROL", CAST IRON, GASKETED HUB OUTLET, THREADED ADJUSTABLE HOUSING, BRONZE PLUG, NICKEL BRONZE SCORIATED TOP, VANDAL-PROOF SCREWS.	AS NOTED	-	-
WHA-1	WATER HAMMER ARRESTOR	ZURN "SHOKTROL", SIZED IN ACCORDANCE WITH PDI-WH201 AND ASSE-1010. BELLOWS AND CASING SHALL BE CONSTRUCTED OF STAINLESS STEEL, MAXIMUM WORKING PRESSURE OF 250 PSIG.	PDI B	-	-
FS-1	FLOOR SINK	ZURN Z1900-3, 12" x 12: SANI-FLOR RECEPTOR WITH 6 INCH SUMP DEPTH. NO HUB OUTLET, 3/4 GRATE. PROVIDE WITH RECTORSEAL SURESEAL WATERLESS DRAIN TRAP.	AS NOTED		
FD-1	FLOOR DRAIN	ZURN Z415B-VP, 6" POLISHED BRONZE NICKEL STRAINER AND VANDAL PROOF SCREWS. PROVIDE WITH RECTORSEAL SURESEAL WATERLESS DRAIN TRAP.	AS NOTED		
COTG	CLEANOUT TO GRADE	ZURN Z-1400-BP-VP "LEVEL-TROL", GASKETED HUB OUTLET, THREADED ADJUSTABLE HOUSING, BRONZE PLUG, DURA-COATED CAST IRON TOP, VANDAL-PROOF SCREWS.	AS NOTED	-	-
DCOTG	DOUBLE CLEANOUT TO GRADE	(2) ZURN Z-1400-BP-VP "LEVEL-TROL", GASKETED HUB OUTLET, THREADED ADJUSTABLE HOUSING, BRONZE PLUG, DURA-COATED CAST IRON TOP VANDAL-PROOF SCREWS, TYLER TWIN CLEANOUT FITTING.	AS NOTED	-	-
RPZ-1	REDUCED PRESSURE ZONE BACKFLOW PREVENTER	WILKINS 975, ALL BRONZE CONSTRUCTION, REDUCED PRESSURE TYPE, COMPLETE WITH STRAINER, TEST COCKS, FULL PORT WEDGE STYLE GATE VALVES, AND AIR GAP.	AS NOTED	-	-
HB-1	HOSE BIBB	ZURN Z1335 WALL HYDRANT. COMPLETE WITH ALL BRONZE INTERIOR PARTS, NON-TURNING OPERATING COUPLING WITH FREE-FLOATING COMPRESSION CLOSURE VALVE AND REPLACEABLE BRONZE SEAT AND SEAT WASHER, AND 3/4 [19] FEMALE IP INLET. NICKEL BRONZE BOX AND HINGED COVER WITH OPERATING KEY LOCK AND "WATER" CAST ON COVER.	-	3/4"	-

1. DRAINS/INTERCEPTORS/HYDRANTS/CLEANOUTS/WATER HAMMER ARRESTORS: WADE, J.R. SMITH, JOSAM, MIFAB, WATTS DRAINAGE
2. HOSE BIBBS: CHICAGO FAUCET, T&S BRASS, WOODFORD
3. BACKFLOW PREVENTERS: WILKINS, FEBCO, WATTS

PLUMBING EQUIPMENT SCHEDULE

ITEM	FIXTURE	DESCRIPTION	NOTES
WH-1	ELECRIC WATER HEATER	AO SMITH DES-30-18 ELECTRIC WATER HEATER, 30 GALLON STORAGE, 18 KW INPUT, 57 GPH AT 100F RISE, 81 GPH 1 HOUR DELIVERY, 65 GHP 3 HOUR AVERAGE, AND 32 MINUTE STORAGE RECOVERY, SET WATER TEMPERATURE TO 140 F. DIMENSIONS: 36 INCH HEIGHT, 20.5 INCH DIAMETER, 162 LB EMPTY WEIGHT.	480V/3PH, 18 KW
HW/RP-1	HOT WATER RETURN PUMP	BELL AND GOSSETT MODEL: E3 - 6 - / B U P R C. PUMP SHALL BE CAPABLE OF DELIVERING 4 GPM WHEN OPERATING AT A TOTAL DEVELOPED HEAD OF 6 FEET OF WATER COLUMN. THE PUMP SHALL BE BRONZE CONSTRUCTION AND RATED AT 145 PSI WORKING PRESSURE. THE PUMP SHALL HAVE A CERAMIC BALL BEARING LUBRICATED BY THE SYSTEM FLUID. PUMP TO HAVE BUILT-IN ADJUSTABLE THERMOSTAT FROM 68°F TO 158°. 24 HOUR TIMER. SET THERMOSTAT TO ACTIVATE WHEN WATER TEMPERATURE IS LOWER THAN 110 F. SET 24 HOUR TIMER SO PUMP IS ACTIVE DURING NORMAL BUSINESS HOURS. NOTE: THE PUMP MUST ALWAYS BE INSTALLED BELOW THE WATER LEVEL OF WATER HEATER SO THAT THE PUMP FLOW IS ALWAYS UPWARD OF DIRECTLY HORIZONTAL AND NOT DOWNWARD. DO NOT MOUNT THE PUMP ABOVE THE WATER HEATER.	MOTOR, 100-140V 60HZ, 5-28 WATTS POWER CONSUMPTION,
TMV-1	THERMOSTATIC TEMPERING VALVE	POWERS HYDROGUARD XP LFMM431 HL 2 VALVE HI/LO SUPPLY FIXTURE EXPOSED. VIRTUAL SHUTOFF IF SUPPLY PRESSURE FAILS, VANDAL-RESISTANT LOCKING MECHANISM, PRESSURE/TEMPERATURE GAUGES, BALL VALVE. 22 GPM FLOW @ 5 PSI DROP. MINIMUM FLOW 0.5 GPM. SET LEAVING TEMPERATURE TO 120 F.	

APPROVED MANUFACTURERS:

1. WATER HEATERS: AO SMITH, OWNER APPROVED SUBSTITUTE
2. EXPANSION TANKS: AMTROL, WATTS, ARMSTRONG
3. HOT WATER CIRCULATORS: BELL AND GOSSETT, GRUNDFOS, TACO

JSRa
JOHNSON SMITTHIPONG & ROSAMOND ASSOCIATES, INC.
5210 E Williams Cir • Ste 600 • Tucson, AZ 85711
(520) 547-7904 • www.jsrarchinc.com

Consultants:

Bernhard TME Engineering

REGISTERED PROFESSIONAL ENGINEER 54000 MARK A. ALVAREZ 11/03/22 Expires 12/31/23

WHITERIVER ADMINISTRATION OFFICE BUILDING

200 W HOSPITAL DR
WHITERIVER, AZ 85941

HHSI102201800007I

U. S. DEPARTMENT OF HEALTH AND HUMAN SERVICES
INDIAN HEALTH SERVICE
PHOENIX AREA OFFICE

No.	Date	Description

Issue Date:	11/3/2022
Project No:	21-020
Scale:	1/8" = 1'-0"
Drawn By:	Author
Checked By:	Checker

FINAL CD

Sheet Title:

LEGENDS, DETAILS AND SCH. - PLUMBING

Sheet Number:

P001

Autodesk Docs://21-020 Whiteriver Admin v2022/21-020 10 MEP WRMOB 2022.rvt
11/2/2022 8:57:08 AM

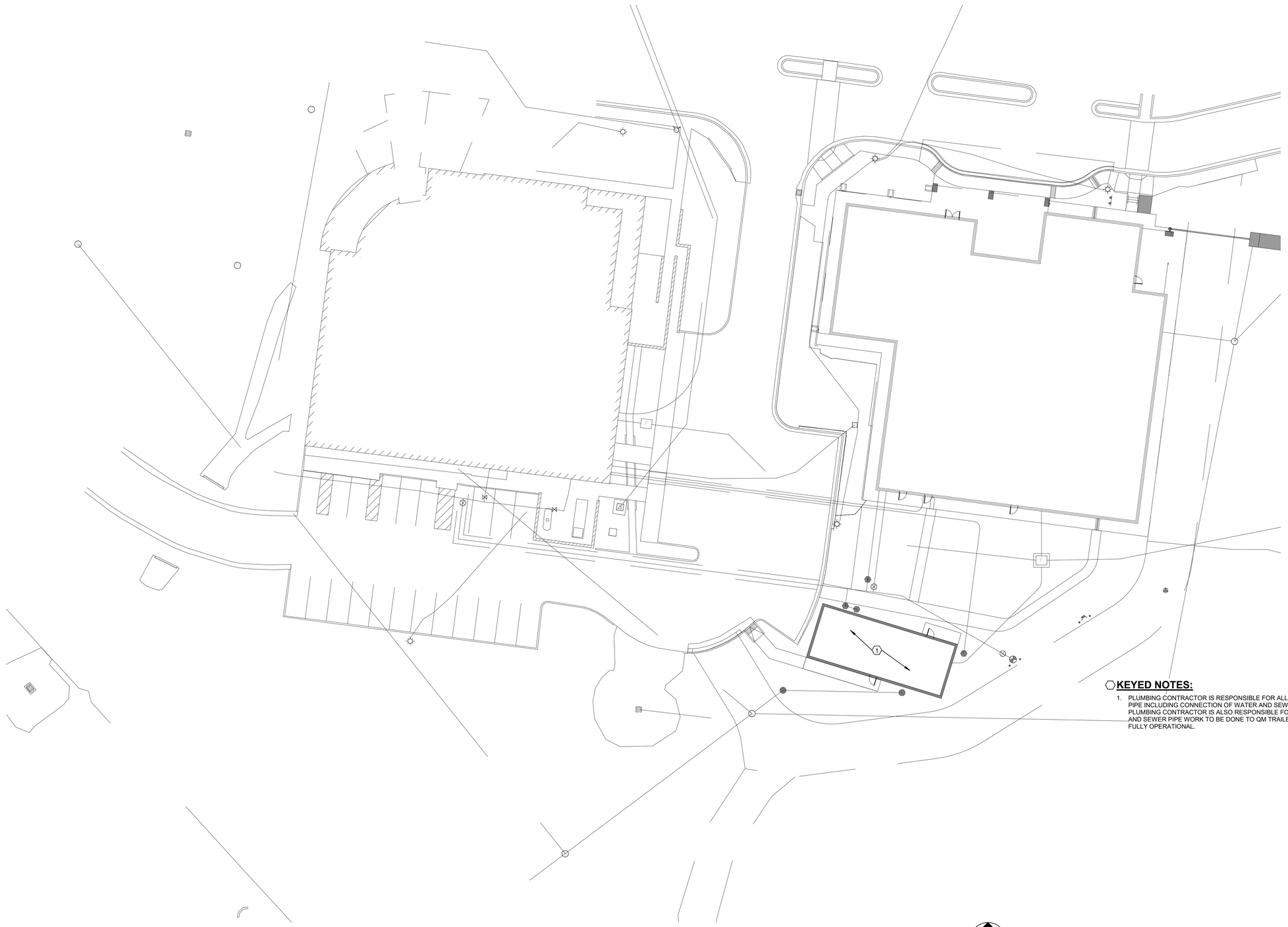

KEYED NOTES:

1. PLUMBING CONTRACTOR IS RESPONSIBLE FOR ALL SITE WATER AND SEWER PIPE INCLUDING CONNECTION OF WATER AND SEWER PIPE TO QM TRAILER. PLUMBING CONTRACTOR IS ALSO RESPONSIBLE FOR ANY AND ALL WATER AND SEWER PIPE WORK TO BE DONE TO QM TRAILER REQUIRED TO MAKE IT FULLY OPERATIONAL.

1 PLUMBING SITE PLAN
1" = 20'-0"

JSRa
JOHNSON SMITTHIPONG & ROSAMOND ASSOCIATES, INC.
5210 E Williams Cir • Ste 600 • Tucson, AZ 85711
(520) 547-7904 • www.jsrarchinc.com

Consultants:

Bernhard TME Engineering

54000 MARK A. ALVAREZ
11/03/22
Expires 12/31/23

WHITERIVER ADMINISTRATION OFFICE BUILDING
200 W HOSPITAL DR
WHITERIVER, AZ 85941

HHSI102201800007I

U. S. DEPARTMENT OF HEALTH AND HUMAN SERVICES
INDIAN HEALTH SERVICE
PHOENIX AREA OFFICE

No.	Date	Description

Issue Date:	11/3/2022
Project No:	21-020
Scale:	1" = 20'-0"
Drawn By:	Author
Checked By:	Checker

FINAL CD

Sheet Title:

PLUMBING SITE PLAN

Sheet Number:

P101

Autodesk Docs://21-020 Whiteriver Admin v2022/21-020 10 MEP-WRMOB 2022.rvt
11/2/2022 8:57:08 AM

1 PLUMBING FLOOR PLAN - PLUMBING DOMESTIC

1/8" = 1'-0"

GENERAL NOTES:

A. REFERENCE PLUMBING FIXTURE SCHEDULE ON P0.02 FOR SIZE OF BRANCH PIPE TO INDIVIDUAL FIXTURES.

ADDITIONAL SCOPE:

A. RELOCATED QM TRAILER SOUTH OF BUILDING: PLUMBING CONTRACTOR IS RESPONSIBLE FOR SITE WATER CONNECTION TO TRAILER AND ANY BUILDING WATER PIPE WORK (COLD, HOT) REQUIRED TO MAKE THE TRAILER WATER SYSTEM FULLY FUNCTIONAL.

JSRa
JOHNSON SMITTHIPONG & ROSAMOND ASSOCIATES, INC.
5210 E Williams Cir • Ste 600 • Tucson, AZ 85711
(520) 547-7904 • www.jsrarchinc.com

Consultants:

Bernhard TME Engineering

REGISTERED PROFESSIONAL ENGINEER 54000 MARK A. ALVAREZ 11/03/22 Expires 12/31/23

WHITERIVER ADMINISTRATION OFFICE BUILDING

200 W HOSPITAL DR
WHITERIVER, AZ 85941

HHSI102201800007I

U. S. DEPARTMENT OF HEALTH AND HUMAN SERVICES
INDIAN HEALTH SERVICE
PHOENIX AREA OFFICE

No.	Date	Description

Issue Date:	11/3/2022
Project No:	21-020
Scale:	1/8" = 1'-0"
Drawn By:	Author
Checked By:	Checker

FINAL CD

Sheet Title:

FIRST FLOOR PLAN - PLUMBING DOMESTIC

Sheet Number:

P121

Autodesk Docs://21-020 Whiteriver Admin v2022/21-020 10 MEP WRMOB 2022.rvt
11/2/2022 8:57:10 AM

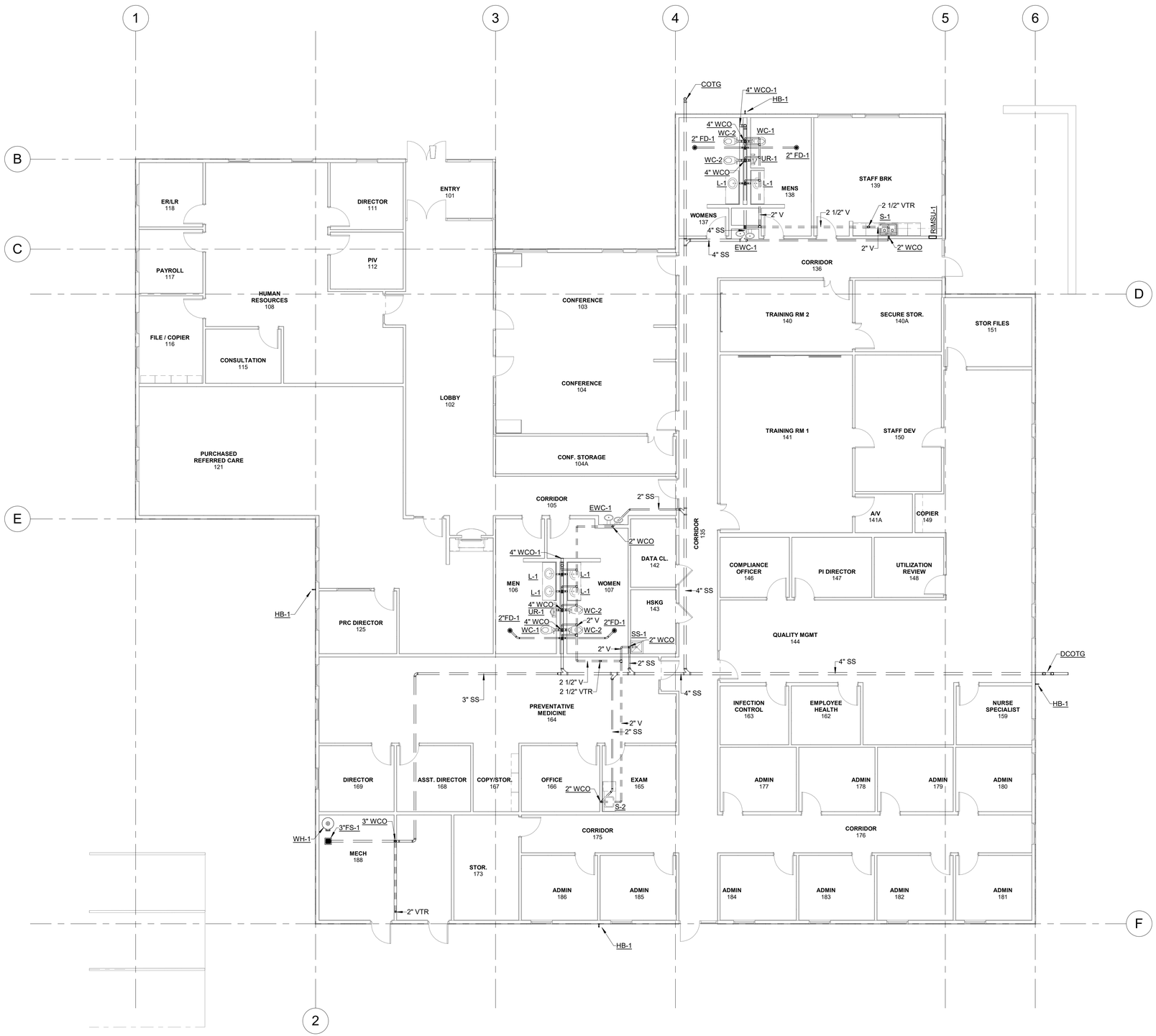

1 FIRST FLOOR PLAN - PLUMBING SANITARY

1/8" = 1'-0"

GENERAL NOTES:

A. WALL CLEANOUT FOR SERVICE SINK TO BE ABOVE ALL SINK TRIM.
B. WALL CLEANOUT FOR TOILET TO BE ABOVE FLUSH VALVE.
C. ALL PLUMBING VENTS THROUGH ROOF TO DISCHARGE A MINIMUM OF 15 FEET AWAY FROM ROOFTOP UNITS.

ADDITIONAL SCOPE:

A. RELOCATED QM TRAILER SOUTH OF BUILDING: PLUMBING CONTRACTOR IS RESPONSIBLE FOR SITE SEWER CONNECTION TO TRAILER AND ANY INTERNAL SEWER AND VENT PIPE WORK REQUIRED TO MAKE THE TRAILER SEWER SYSTEM FULLY FUNCTIONAL.

JSRa
JOHNSON SMITTHIPONG & ROSAMOND ASSOCIATES, INC.
5210 E Williams Cir • Ste 600 • Tucson, AZ 85711
(520) 547-7904 • www.jsrarchinc.com

Consultants:

Bernhard TME Engineering

54000 MARK A. ALVAREZ 11/03/22 Expires 12/31/23

WHITERIVER ADMINISTRATION OFFICE BUILDING

200 W HOSPITAL DR
WHITERIVER, AZ 85941

HHSI102201800007I

U. S. DEPARTMENT OF HEALTH AND HUMAN SERVICES
INDIAN HEALTH SERVICE
PHOENIX AREA OFFICE

No.	Date	Description

Issue Date:	11/3/2022
Project No:	21-020
Scale:	1/8" = 1'-0"
Drawn By:	Author
Checked By:	Checker

FINAL CD

Sheet Title:

FIRST FLOOR PLAN - PLUMBING SANITARY

Sheet Number:

P131

Autodesk Docs://21-020 Whiteriver Admin v2022/21-020 10 MEP WRMOB 2022.rvt
11/2/2022 8:57:11 AM

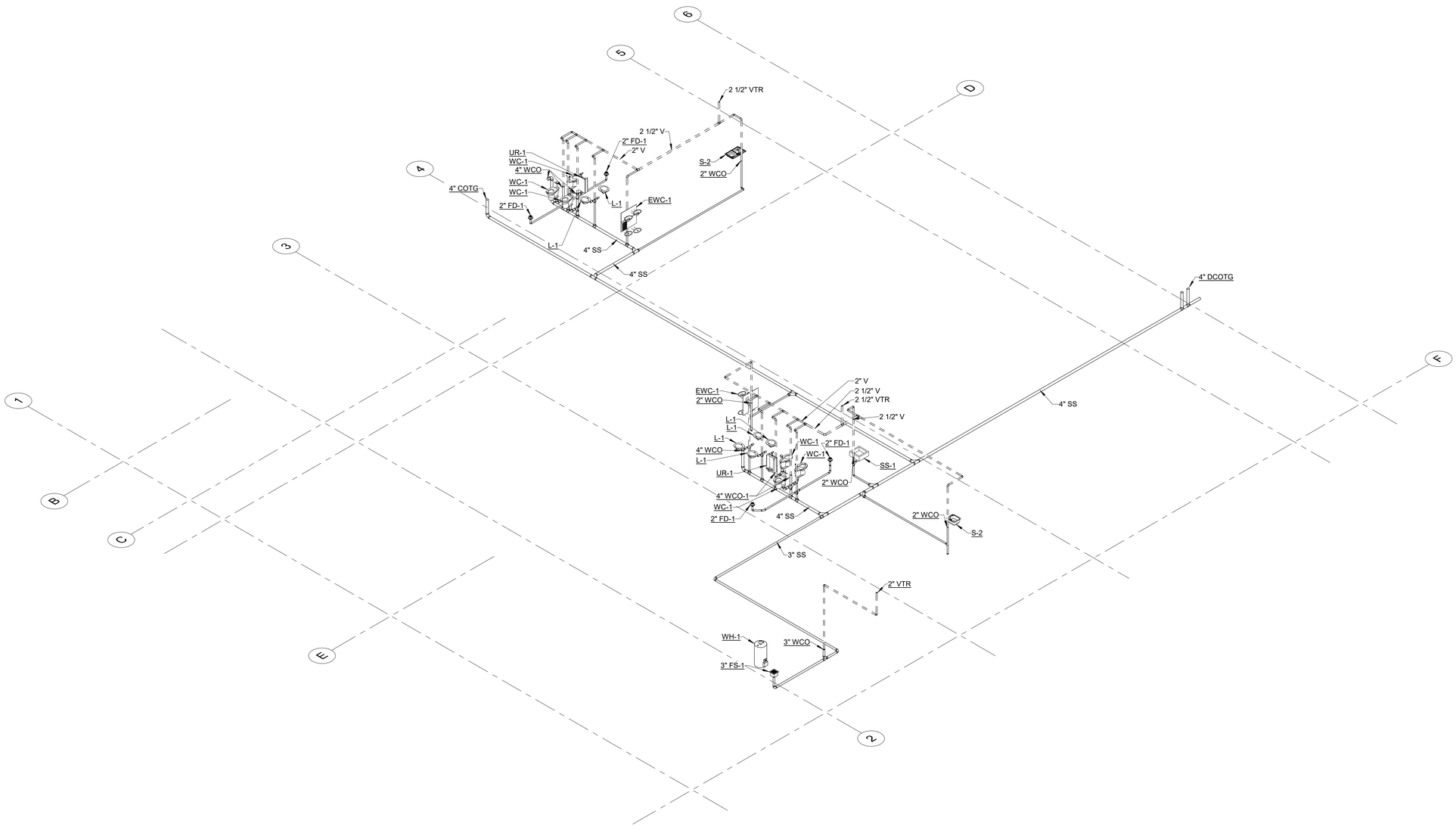

JOHNSON SMITTHIPONG & ROSAMOND ASSOCIATES, INC.
5210 E Williams Cir • Ste 600 • Tucson, AZ 85711
(520) 547-7904 • www.jsrarchinc.com

Consultants:

Bernhard TME Engineering

REGISTERED PROFESSIONAL ENGINEER
54000
MARK A. ALVAREZ
11/03/22
Expires 12/31/23

WHITERIVER ADMINISTRATION OFFICE BUILDING

200 W HOSPITAL DR
WHITERIVER, AZ 85941

HHSI102201800007I

U. S. DEPARTMENT OF HEALTH AND HUMAN SERVICES
INDIAN HEALTH SERVICE
PHOENIX AREA OFFICE

No.	Date	Description

Issue Date:	11/3/2022
Project No:	21-020
Scale:	1/4" = 1'-0"
Drawn By:	Author
Checked By:	Checker

FINAL CD

Sheet Title:

RISERS - PLUMBING

Sheet Number:

P501

Autodesk Docs://21-020 Whiteriver Admin v2022/21-020 10 MEP WRMOB 2022.rvt
11/2/2022 8:57:12 AM

NOTE:
FLEXIBLE DUCT CONNECTIONS SHALL BE INSTALLED TO ADC STANDARDS AND SEALED TO UL STANDARDS PER AMC 603 AND 604.2.1. AS A MINIMUM, THE CONTRACTOR SHALL SECURE THE FLEXIBLE DUCT TO GRILLE AND METAL DUCT WITH DRAWBANDS, AND WRAP 3" WIDE ALUMINUM TAPE EQUAL TO HARDCAST "FOIL GRIP" AROUND DRAWBAND AND EXPOSED END OF FLEXIBLE DUCT INSULATION.

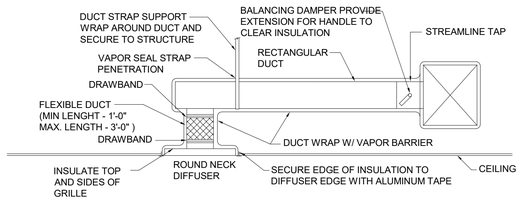

1 SUPPPLY AIR DIFFUSER CONNECTION TO RECTANGULAR DUCT
NOT TO SCALE

NOTE:
FLEXIBLE DUCT CONNECTIONS SHALL BE INSTALLED TO ADC STANDARDS AND SEALED TO UL STANDARDS PER AMC 603 AND 604.2.1. AS A MINIMUM, THE CONTRACTOR SHALL SECURE THE FLEXIBLE DUCT TO GRILLE AND METAL DUCT WITH DRAWBANDS, AND WRAP 3" WIDE ALUMINUM TAPE EQUAL TO HARDCAST "FOIL GRIP" AROUND DRAWBAND AND EXPOSED END OF FLEXIBLE DUCT INSULATION.

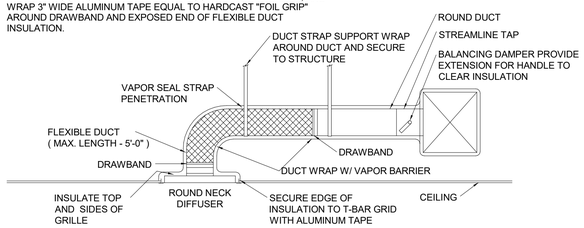

2 DIFFUSER CONNECTION TO ROUND DUCT
NOT TO SCALE

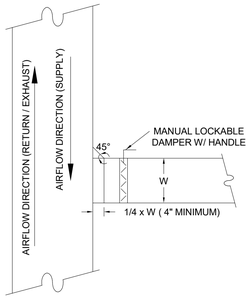

3 RECTANGULAR BRANCH DUCT CONNECTION
NOT TO SCALE

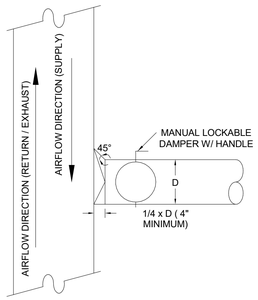

4 ROUND BRANCH DUCT CONNECTION
NOT TO SCALE

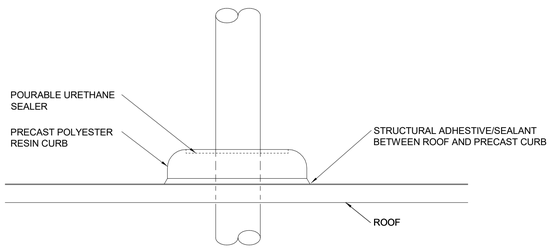

NOTE:

PRECAST PIPE PENETRATION CURB SYSTEM EQUAL TO CHEMCURB

5 PRECAST PIPE PENETRATION DETAIL
NOT TO SCALE

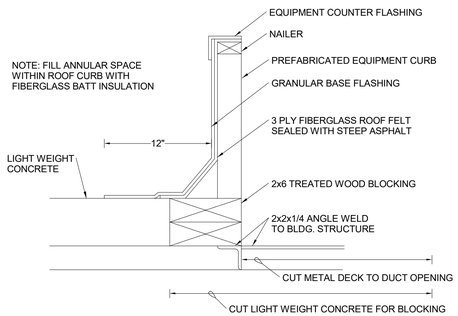

6 EQUIPMENT CURB DETAIL
NOT TO SCALE

HVAC GENERAL NOTES:

1. REFER TO GENERAL NOTES ON DRAWING FOR ADDITIONAL REQUIREMENTS.
2. ALL HVAC WORK TO BE PER SMACNA AND ALL APPLICABLE CODES.
3. ALL DUCTS SHALL BE MOUNTED HIGH AS POSSIBLE AGAINST BOTTOM OF JOISTS EXCEPT AS REQUIRED TO AVOID CONFLICTS WITH INTERSECTING DUCTS. DIAGONALLY OFFSET DUCTS IMMEDIATELY BEFORE AND AFTER PASSING UNDER INTERSECTING DUCTS OR LARGE STRUCTURAL MEMBERS TO MAINTAIN DUCT TIGHT TO STRUCTURE.
4. MINIMUM 3'-0" AND MAXIMUM 5'-0" FLEX DUCT ON ALL DIFFUSER RUNOUTS. CONNECTIONS TO FLEX DUCT SHALL BE SMOOTH ON AIRFLOW SIDE. EXCEPTION; BRANCH DUCTWORK TO DIFFUSER/GRILLES IN HALLWAY SHALL NOT CONTAIN ANY FLEX DUCT; ALL MUST BE METAL WITH GAUGE PER SMACNA STANDARDS.
5. PROVIDE STREAMLINE TAP AND MANUAL BALANCING DAMPER AT EACH CONNECTION OF ROUND/ RECTANGULAR BRANCH DUCTS BETWEEN MAIN DUCT AND DIFFUSER/GRILLE. DAMPERS SHALL BE ACCESSIBLE TO ALLOW FOR REQUIRED BALANCING.
6. SUPPLY DUCTS SHALL BE EXTERNALLY INSULATED WITH FIBERGLASS INSULATION UNLESS OTHERWISE SHOWN. DUCT SIZES SHOWN ON PLANS INDICATE FREE AREA REQUIRED IN DUCTS. ADJUST DUCT SIZES FOR LINER WHERE APPLICABLE OR WHERE SHOWN. SEE SPECIFICATIONS FOR INSULATION TYPE AND STANDARDS.
7. INSTALL NEW FILTERS AT THE COMPLETION OF CONSTRUCTION. USE ONE SET OF FILTERS DURING CONSTRUCTION. INSTALL FINAL SET PRIOR TO TEST AND BALANCE.
8. BALANCE AIR SYSTEM TO PROVIDE INDICATED AIR FLOWS. SEE SPECIFICATIONS FOR OTHER TEST AND BALANCE REQUIREMENTS. SUBMIT FINAL BALANCE OF AIR AND WATER SYSTEMS (FLOW AND TEMPERATURE) FOR REVIEW.
9. MECHANICAL CONTRACTOR (MC) SHALL COORDINATE AND VERIFY THE FOLLOWING WITH THE ELECTRICAL CONTRACTOR (EC) PRIOR TO BID:

   A) DISCONNECTS:
   WHERE NOT FURNISHED WITH EQUIPMENT: FURNISHED BY EC, INSTALLED BY EC.
   WHERE FURNISHED WITH EQUIPMENT: FURNISHED BY MC, INSTALLED BY EC.
10. COORDINATE FINAL PLACEMENT OF ALL THERMOSTATS WITH OWNER AND ENGINEER. ANY THERMOSTAT THAT IS REQUIRED TO BE MOUNTED ON AN EXTERIOR WALL SHALL BE MOUNTED ON AN INSULATED PAD.

HVAC MATERIALS

A. PIPE AND FITTINGS

1. CONDENSATE DRAIN: ABOVE GRADE - TYPE "L" HARD DRAWN COPPER WITH WROUGHT COPPER FITTINGS.
2. REFRIGERANT PIPE - 1-1/2 INCH AND SMALLER: COPPER, TYPE ACR, ANNEALED-TEMPER TUBING AND WROUGHT COPPER FITTINGS WITH SOLDERED JOINTS.

B. PIPE INSULATION

1. CONDENSATE DRAIN: 1/2 INCH THICK MINERAL-FIBER, PREFORMED PIPE, TYPE I. COMPLY WITH ASTM C 547, TYPE I, GRADE A, WITH FACTORY-APPLIED ASJ-SSL.

2. REFRIGERANT PIPE: 3/4 INCH THICK FLEXIBLE ELASTOMERIC, CLOSED CELL COMPLYING WITH ASTM C 534, TYPE I EQUAL TO ARAMCELL ARMAFLEX.

C. PIPE JOINTS

1. SWEAT SOLDER JOINTS IN COPPER PIPING SYSTEMS SHALL BE MADE WITH STAY-SAFE "BRIDGIT" LEAD FREE BEARING SOLDER WITH STAY-CLEAN LIQUID OR STAY-CLEAN PASTE FLUX BY J.W. HARRIS AND CO. INC.

D. PIPE HANGERS AND SUPPORTS

1. HANGERS - ADJUSTABLE CARBON STEEL CLEVIS; GRINNEL NO. 260, CT-65.
2. VERTICAL SUPPORT - STEEL RISER CLAMP.
3. PROVIDE COPPER PLATED HANGERS AND SUPPORTS FOR COPPER PIPING.
4. SPACE SUPPORTS FOR COPPER PIPES NO MORE THAN 5 FEET APART.

E. DUCTWORK : DUCTWORK SHALL BE ASTM A 653/A 653M G90 GALVANIZED STEEL MILL PHOSPHATIZED FINISH, GAUGE AND REINFORCING PER SMACNA DUCTWORK STANDARDS.

F. DUCT INSULATION:
DUCTWORK SHALL BE INSULATED WITH 2" R-6 INSULATION.

DUCTWORK SYMBOLS

T	THERMOSTAT
	THERMOSTAT WIRING
H	HUMIDISTAT
TS	TEMPERATURE SENSOR
FM	GPM FLUID FLOW METER
SA	SUPPLY AIR DUCT
RA	RETURN AIR DUCT
EA	EXHAUST AIR DUCT
CFM	CUBIC FEET PER MINUTE
EMS	ENERGY MANAGEMENT SYSTEM
ATC	AUTOMATIC TEMP CONTROLS
CO2	CARBON DIOXIDE
PPM	PARTS PER MILLION
	ROUND DIAMETER
	FLAT OVAL (MAJOR/MINOR)
	SHORT (1x) RADIUS ELL (RECTANGULAR OR ROUND) CENTERLINE RADIUS = 1d
	LONG (1.5x) RADIUS ELL (ROUND OR OVAL) CENTERLINE RADIUS = 1.5d
	SQUARE ELL
	ELL WITH TURNING VANES
	STREAMLINE TAP (RECTANGULAR)
DIA	STREAMLINE TAP (ROUND)
DIA	CONICAL TAP
	STRAIGHT TAP
	LATERAL TAP
	MANUAL VOLUME DAMPER
M	MOTORIZED VOLUME DAMPER
FD	FIRE DAMPER (FD)
S	SMOKE DAMPER
S FD/S	COMBINATION FIRE / SMOKE DAMPER (FD/S)
20/12	RECTANGULAR DUCT (WIDTH/DEPTH)
	ROUND DUCT OFFSET
RISE	CHANGE IN ELEVATION (RISE, FALL)
	FLEXIBLE DUCT
	SUPPLY DUCT UP
	RETURN DUCT UP
	EXHAUST DUCT UP
	SUPPLY DUCT DOWN
	RETURN DUCT DOWN
	EXHAUST DUCT DOWN
	CEILING DIFFUSER
	RETURN AIR GRILLE
	EXHAUST AIR GRILLE
AP	ACCESS PANEL
AP	ACCESS PANEL IN ROUND OR OVAL DUCT
X - 1	TYPE - CFM

JSRa
JOHNSON SMITTHIPONG & ROSAMOND ASSOCIATES, INC.
5210 E Williams Cir • Ste 600 • Tucson, AZ 85711
(520) 547-7904 • www.jsrarchinc.com

Consultants:

Bernhard TME Engineering

REGISTERED PROFESSIONAL ENGINEER 54000 MARK A. ALVAREZ 11/03/22 Expires 12/31/23

WHITERIVER ADMINISTRATION OFFICE BUILDING

200 W HOSPITAL DR
WHITERIVER, AZ 85941

HHSI102201800007I

U. S. DEPARTMENT OF HEALTH AND HUMAN SERVICES
INDIAN HEALTH SERVICE
PHOENIX AREA OFFICE

No.	Date	Description

Issue Date:	11/3/2022
Project No:	21-020
Scale:	1/8" = 1'-0"
Drawn By:	Author
Checked By:	Checker

FINAL CD

Sheet Title:

GENERAL NOTES AND LEGEND

Sheet Number:

M001

Autodesk Docs://21-020 Whiteriver Admin v2022/21-020 10 MEP WRMOB 2022.rvt
11/2/2022 8:55:42 AM

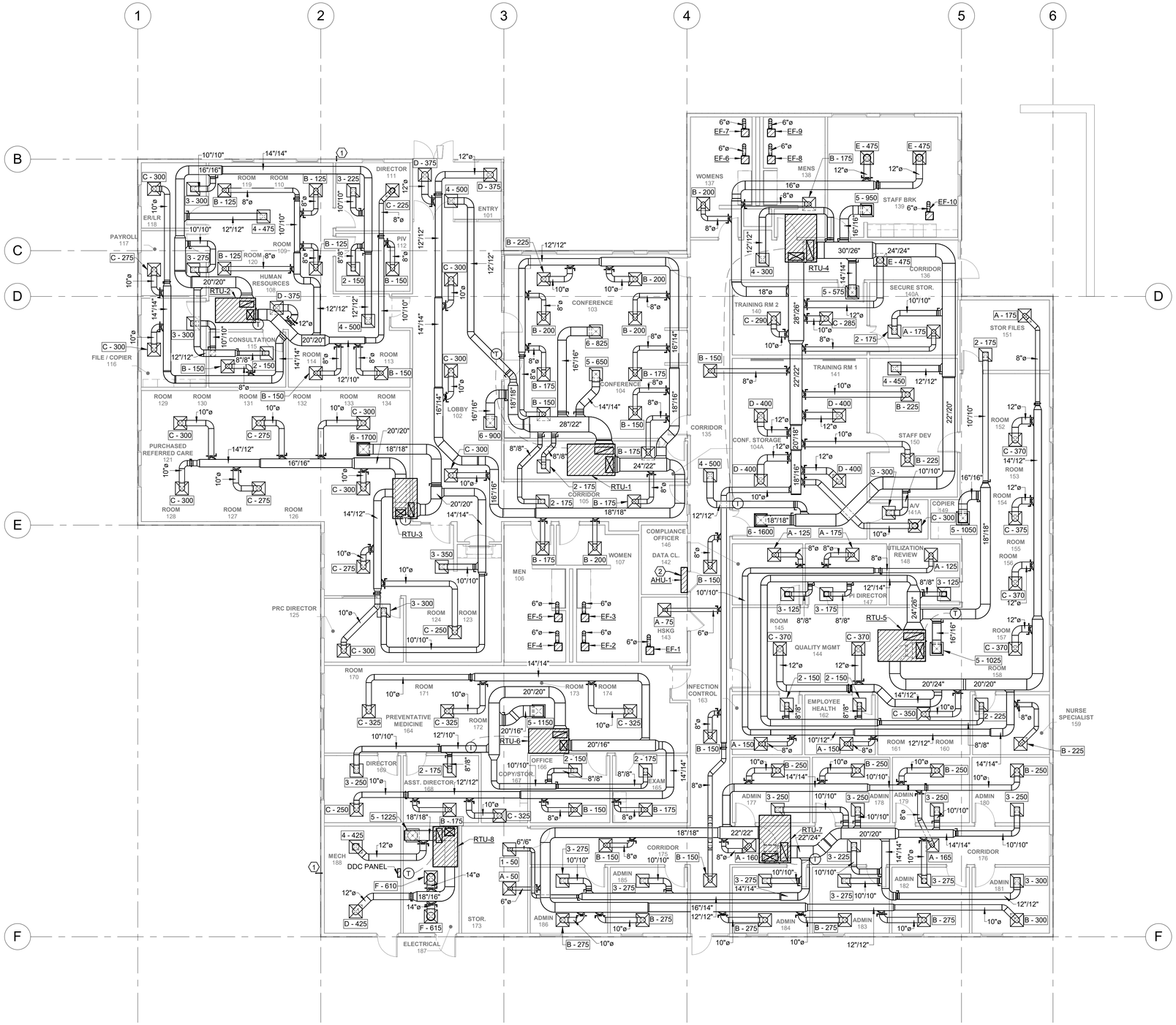

A1 HVAC FLOOR PLAN

1/8" = 1'-0"

CONTROLS CONTRACTOR SCOPE:

A. CONTROLS CONTRACTOR TO CONNECT ALL ROOTFOP HEAT PUMPS AND THE DATA CLOSET MINI-SPLIT TO THE CAMPUS BUILDING AUTOMATION SYSTEM (AUTOMATED LOGIC) FOR THE FUNCTIONS LISTED BELOW.

B. THE GRAPHICS PAGES FOR THIS BUILDING IN THE CONTROL SYSTEM SHALL HAVE A FLOOR PLAN AND ROOF PLAN LAYOUT.

C. FLOOR PLAN LAYOUT SHALL SHOW THE FOLLOWING:
   a. SHOW RTU ZONES (REFER TO M112), SHOW TEMPERATURE SETPOINT (AND BE ADJUSTABLE), ACTUAL TEMPERATURE, RTU STATUS OF ON/OFF, AND BE ABLE TO TOGGLE UNIT ON/OFF. SELECTING ON THE RTU ZONE SHALL TAKE THE USER TO THE RTU PAGE SHOWING THE INFORMATION LISTED BELOW.
   b. SHOW MINI-SPLIT AIR HANDLING UNIT/CONDENSING UNIT ZONE, SHOW TEMPERATURE SETPOINT (AND BE ADJUSTABLE), ACTUAL TEMPERATURE, MINI SPLIT STATUS OF ON/OFF, AND BE ABLE TO TOGGLE UNIT ON/OFF. SELECTING ON MINI SPLIT ZONE SHALL TAKE USER TO THE MINI SPLIT PAGE SHOWING THE INFORMATION LISTED BELOW.

D. ROOF PLAN LAYOUT SHALL SHOW THE FOLLOWING:
   a. SHOW RTUS, SHOW TEMPERATURE SETPOINT (AND BE ADJUSTABLE), ACTUAL TEMPERATURE, RTU STATUS OF ON/OFF, AND BE ABLE TO TOGGLE UNIT ON/OFF. SELECTING ON THE RTU WILL TAKE THE USER TO A SEPARATE GRAPHIC PAGE FOR THE RTU SHOWING BELOW LISTED INFORMATION.
   b. SHOW MINI-SPLIT CONDENSING UNIT, SHOW TEMPERATURE SETPOINT (AND BE ADJUSTABLE), ACTUAL TEMPERATURE, MINI SPLIT STATUS OF ON/OFF, AND BE ABLE TO TOGGLE UNIT ON/OFF.

E. RTU GRAPHICS PAGE TO SHOW: TEMPERATURE SETPOINT (AND BE ADJUSTABLE), ACTUAL TEMPERATURE, RTU STATUS OF ON/OFF AND BE ABLE TO TOGGLE UNIT ON/OFF, VARIABLE SPEED FAN INFORMATION, SCHEDULE, OCCUPANCY SETBACK TEMPERATURE INFORMATION, RTU STATUS POINTS, ALARMS, AND ALL OTHER COMMAND AND MONITOR POINTS AVAILABLE.

F. MINI SPLIT GRAPHICS PAGE TO SHOW: TEMPERATURE SETPOINT (AND BE ADJUSTABLE), ACTUAL TEMPERATURE, STATUS OF ON/OFF AND BE ABLE TO TOGGLE UNIT ON/OFF, SCHEDULE, AND OTHER ALL COMMAND AND MONITOR POINTS AVAILABLE. REFER TO SPECIFICATIONS FOR FURTHER INFORMATION.
   - BACNET COMMAND POINTS AVAILABLE ARE: DRIVE OFF/ON SETUP, SETPOINT, MODE SETUP, FAN SPEED SETUP, AIR DIRECTION SETUP, TEMPERATURE UNITS.
   - BACNET MONITOR POINTS AVAILABLE ARE: MODE STATE, FAN SPEED STATE, AIR DIRECTION STATE, INLET TEMPERATURE, FAULT CODE.

G. CONTROLS CONTRACTOR IS RESPONSIBLE FOR COORDINATION WITH THE OWNER AND SETTING UP RTU/MINI SPLIT SCHEDULE OF OPERATION AND SETTING UP OCCUPIED AND UNOCCUPIED TEMPERATURE SETPOINTS.

H. REFER TO SPECIFICATIONS FOR FURTHER INFORMATION.

I. ALL DUCT BRANCHES TO BE INSTALLED WITH A MANUAL BALANCING DAMPER WHETHER SHOWN OR NOT.

GENERAL NOTES:

A. ROOFTOP UNITS AND CONDENSING UNIT SHOWN ON THIS PLAN ARE ON THE ROOF AND SHOWN ON THIS PLAN FOR CLARITY. REFER TO M112 FOR HVAC ZONES.
B. VERTICAL DUCTS DOWN FROM ROOFTOP UNITS SHALL TURN TO THE HORIZONTAL BY A RADIUS ELBOW; TAPS OFF THE SIDE OF THE VERTICAL DUCT IS NOT ACCEPTABLE.
C. THERMOSTATS SHALL NOT BE PLACED WITHIN 2 FEET OF EQUIPMENT GENERATING HEAT.
D. DDC (DIRECT DIGITAL CONTROL) PANEL LOCATED IN MECHANICAL ROOM IS FOR HOUSING CONTROLS CONTRACTORS NETWORK CONTROLLER AND OTHER REQUIRED EQUIPMENT PER THEIR SCOPE.
E. EXHAUST FAN DISCHARGE DUCT TO DISCHARGE A MINIMUM OF 15 FEET AWAY FROM ROOFTOP UNITS.

KEYED NOTES:

1. 1 INCH CONDENSATE PIPE DOWN FROM ROOFTOP UNITS TO DRAIN TO LANDSCAPING. INSTALL PIPE DOWN FROM ROOF TIGHT IN CORNER.
2. MINI-SPLIT CONDENSATE DRAIN TO DISCHARGE INTO SERVICE SINK IN HSKP 143.

TEST AND BALANCE NOTES:

A. REFER TO SPECIFICATIONS FOR ALL SCOPE/REQUIREMENTS OF TEST AND BALANCE (TAB.)

B. TAB CONTRACTOR TO ADJUST EACH OF THE ROOFTOP UNITS TO THE BELOW AIRFLOWS.

ROOFTOP UNIT AIRFLOW SETTING

RTU #	TONS	SUPPLY AIR RQ'D	RETURN AIR RQ'D	OUTSIDE AIR RQ'D
1	8.5	3,850 CFM	3,225 CFM	625 CFM
2	6	2,575 CFM	2,375 CFM	200 CFM
3	6	2,575 CFM	2,350 CFM	225 CFM
4	12.5	5,575 CFM	4,850 CFM	725 CFM
5	8.5	3,700 CFM	3,200 CFM	500 CFM
6	5	2,050 CFM	1,900 CFM	150 CFM
7	7.5	3,200 CFM	2,950 CFM	250 CFM
8	4	1,650 CFM	1,650 CFM	0 CFM

JSRa
JOHNSON SMITTHIPONG & ROSAMOND ASSOCIATES, INC.
5210 E Williams Cir • Ste 600 • Tucson, AZ 85711
(520) 547-7904 • www.jsrarchinc.com

Consultants:

Bernhard TME Engineering

54000 MARK A. ALVAREZ 11/03/22 Expires 12/31/23

WHITERIVER ADMINISTRATION OFFICE BUILDING

200 W HOSPITAL DR
WHITERIVER, AZ 85941

HHSI102201800007I

U. S. DEPARTMENT OF HEALTH AND HUMAN SERVICES
INDIAN HEALTH SERVICE
PHOENIX AREA OFFICE

No.	Date	Description

Issue Date:	11/3/2022
Project No:	21-020
Scale:	1/8" = 1'-0"
Drawn By:	Author
Checked By:	Checker

FINAL CD

Sheet Title:

FIRST FLOOR PLAN - HVAC DUCTWORK

Sheet Number:

M111

Autodesk Docs://21-020 Whiteriver Admin v2022/21-020 10 MEP WRMOB 2022.rvt
11/15/2022 11:21:24 AM

KEYED NOTES:

1. RTU-1 ZONE SERVES CONFERENCE ROOM/LOBBY/ENTRANCE AREA.
2. RTU-2 ZONE SERVES HUMAN RESOURCES.
3. RTU-3 ZONE SERVES PURCHASED REFERRED CARE.
4. RTU-4 ZONE SERVES TRAINING/STAFF DEVELOPMENT AREA.
5. RTU-5 ZONE SERVES QUALITY MANAGEMENT.
6. RTU-6 ZONE SERVES PREVENTATIVE MEDICINE.
7. RTU-7 ZONE SERVES ADMINISTRATION.
8. RTU-8 ZONE SERVES THE ELECTRICAL AND MECHANICAL ROOMS.

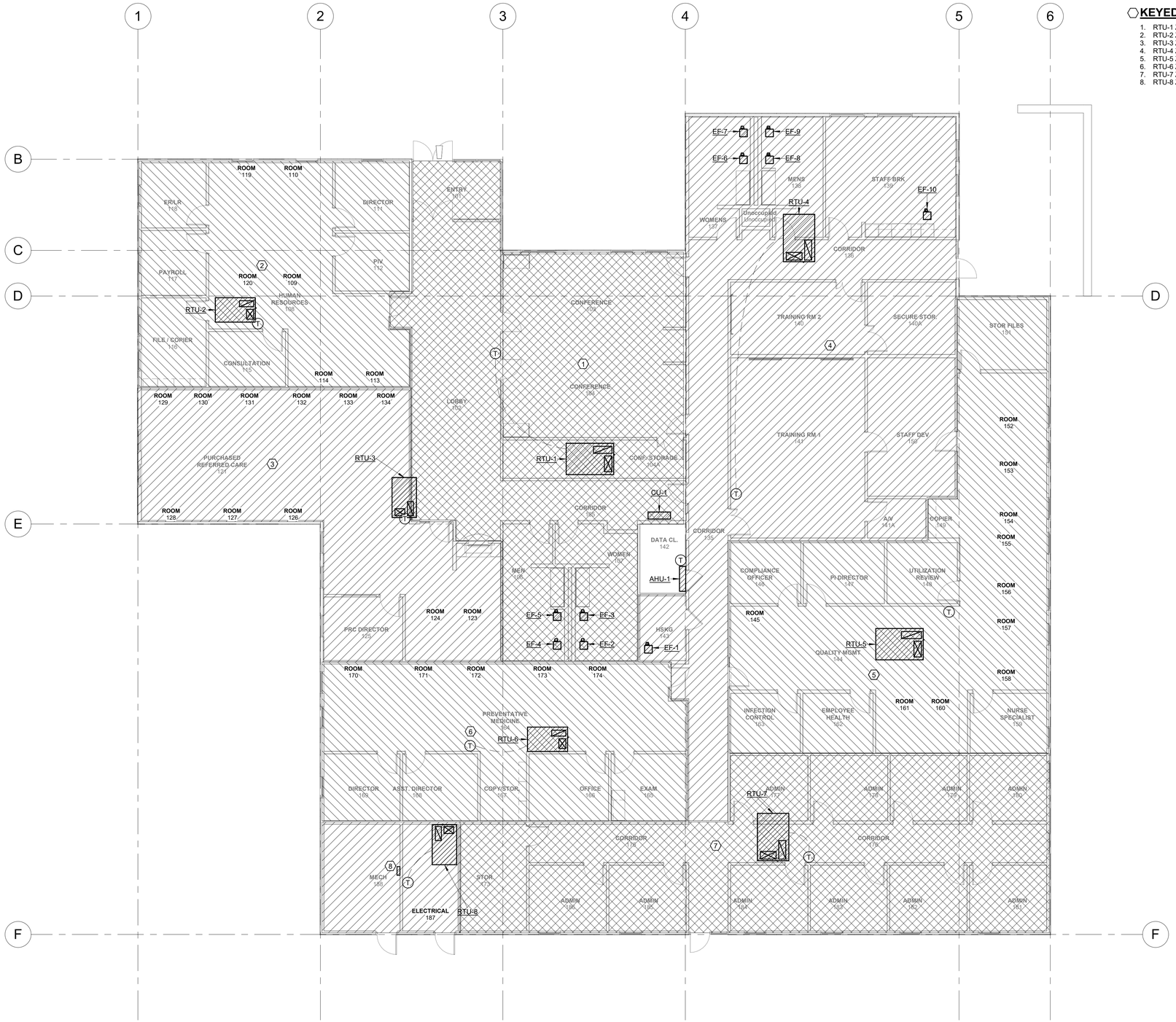

1 HVAC ZONE PLAN
1/8" = 1'-0"

JSRa
JOHNSON SMITTHIPONG & ROSAMOND ASSOCIATES, INC.
5210 E Williams Cir • Ste 600 • Tucson, AZ 85711
(520) 547-7904 • www.jsrarchinc.com

Consultants:

Bernhard TME Engineering

REGISTERED PROFESSIONAL ENGINEER
54000
MARK A. ALVAREZ
11/03/22
Expires 12/31/23

WHITERIVER ADMINISTRATION OFFICE BUILDING

200 W HOSPITAL DR
WHITERIVER, AZ 85941

HHSI102201800007I

U. S. DEPARTMENT OF HEALTH AND HUMAN SERVICES
INDIAN HEALTH SERVICE
PHOENIX AREA OFFICE

No.	Date	Description

Issue Date:	11/3/2022
Project No:	21-020
Scale:	1/8" = 1'-0"
Drawn By:	Author
Checked By:	Checker

FINAL CD

Sheet Title:

FIRST FLOOR PLAN - HVAC ZONES

Sheet Number:

M112

Autodesk Docs://21-020 Whiteriver Admin v2022/21-020 10 MEP-WRMOB 2022.rvt
11/2/2022 8:55:44 AM

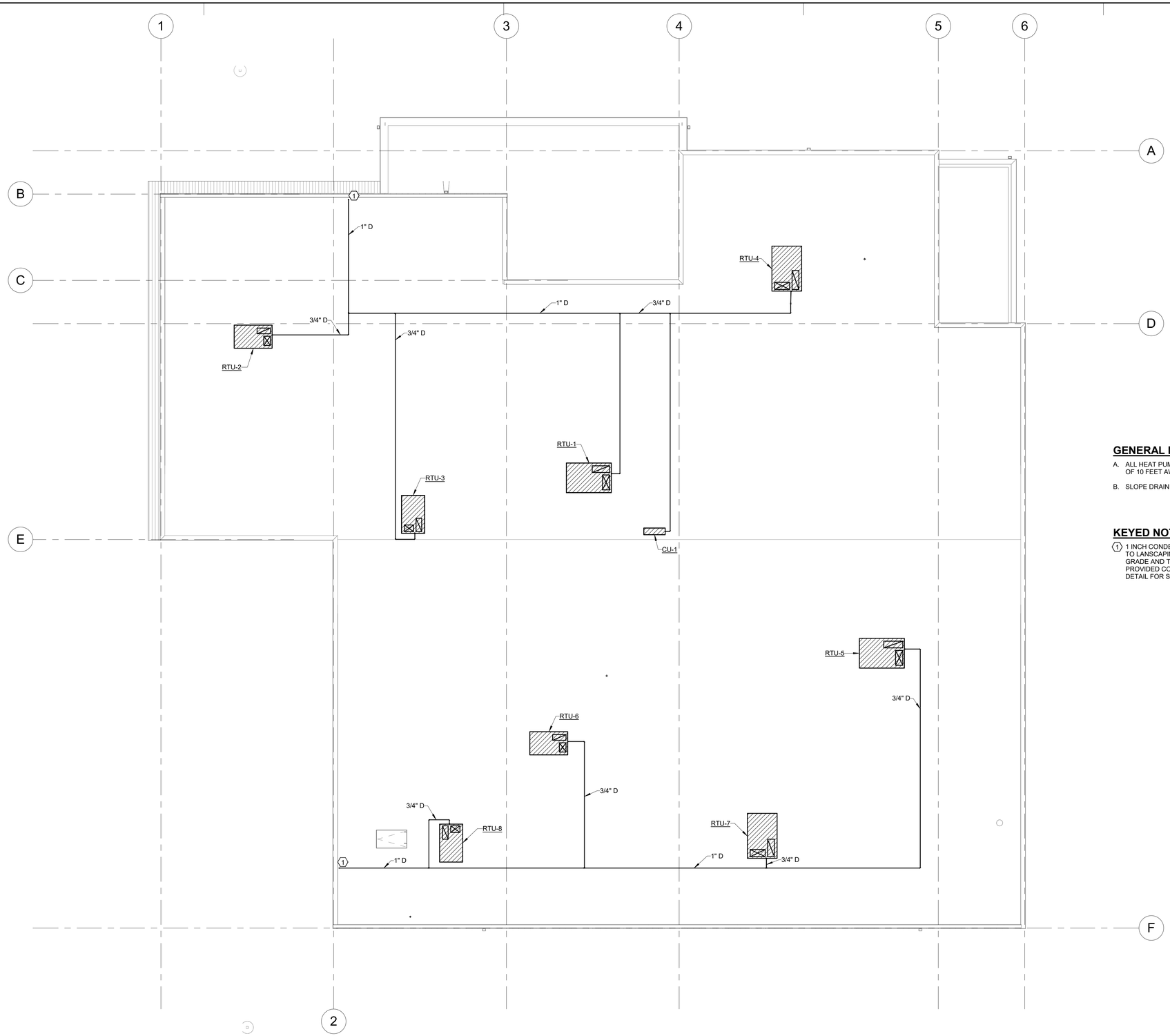

GENERAL NOTES:

A. ALL HEAT PUMP ROOFTOP UNITS ARE TO BE INSTALLED A MINIMUM OF 10 FEET AWAY FROM THE ROOF EDGE.

B. SLOPE DRAIN PIPE A MINIMUM OF 1/4" PER FOOT.

KEYED NOTES:

1. 1 INCH CONDENSATE PIPE DOWN IN WALL TO DRAIN TO LANSCAPING. TURN PIPE OUT OF EXTERIOR WALL 12 INCHES ABOVE GRADE AND TERMINATE WITH A 90 DEGREE ELBOW ONTO A CONTRACTOR PROVIDED CONCRETE SPLASH BLOCK. REFER TO PRECAST PIPE PENETRATION DETAIL FOR SEALING REQUIREMENTS FOR ROOF PIPE PENETRATION.

A2 HVAC ROOF PLAN
1/8" = 1'-0"

JOHNSON SMITTHIPONG & ROSAMOND ASSOCIATES, INC.
5210 E Williams Cir • Ste 600 • Tucson, AZ 85711
(520) 547-7904 • www.jsrarchinc.com

Consultants:

Bernhard TME Engineering

REGISTERED PROFESSIONAL ENGINEER
54000
MARK A. ALVAREZ
11/03/22
Expires 12/31/22

WHITERIVER ADMINISTRATION OFFICE BUILDING

200 W HOSPITAL DR
WHITERIVER, AZ 85941

HHSI1022018800007I

U. S. DEPARTMENT OF HEALTH AND HUMAN SERVICES
INDIAN HEALTH SERVICE
PHOENIX AREA OFFICE

No.	Date	Description

Issue Date:	11/3/2022
Project No:	21-020
Scale:	1/8" = 1'-0"
Drawn By:	Author
Checked By:	Checker

FINAL CD

Sheet Title:

ROOF HVAC PLAN

Sheet Number:

M113

Autodesk Docs://21-020 Whiteriver Admin v2022/21-020 10 MEP WRMOB 2022.rvt
11/2/2022 8:55:45 AM

Heat Pump Rooftop Schedule

(1) Commercial Products are rated in Gross MBH

(2) Weight (each) with factory installed options

White River, AZ - rooftop heat pumps

Tag #	Model Number	Brand	Qty	Supply Air Blower: CFM SA	CFM OA	HP	ESP (IWG)	Blwr RPM	Cooling: Temperature (°F) Ent. Air DB	Ent. Air WB	Lvg. Air DB	Lvg. Air WB	OD Amb	Capacity MBH1 Total	Sens.	EER	SEER/IEER	Refrigerant	Heating: Heat Pump Ratings Design Conditions OD	MBH	kW	MBH 47	MBH 17	COP(°F) 47	COP(°F) 17	HSPF	Electrical: Voltage	MCA	Min Fuse	Max Fuse	Alt. (Ft.)	Weight Lbs.2	Accessories
RTU-1	XYE09A4B3AB2C112A2	JCI/Tempmaster	1	3850	625	2.40	1.0	946	79.0	58.0	55.7	49.0	105.0	86.0	80.1	12.0	15.8	R410A	47.0	97.5	6.0	96.5	54.5	3.40	2.26	0.0	460-3-60	20.6	25	25	5164.0	1115	Enthalpy Economizer, VFD, Return Air Smoke Detector, Phase Monitor, BACNet MSTP, Louvered Hail Guards, Sloped Roof Curb, IECC Compliant Bacnet Thermostat, Powered Electrical Outlets (Refer to M111 for control requirements of Bacnet RTU and thermostat)
RTU-2	XYEA7A4B3AB2C112A2	JCI/Tempmaster	1	2575	200	2.90	1.0	907	79.0	58.0	55.9	49.6	105.0	54.0	53.0	12.0	14.8	R410A	47.0	65.2	4.5	67.0	38.0	3.40	2.40	0.0	460-3-60	19.7	20	25	5164.0	907	Enthalpy Economizer, VFD, Return Air Smoke Detector, Phase Monitor, BACNet MSTP, Louvered Hail Guards, Sloped Roof Curb, IECC Compliant Bacnet Thermostat, Powered Electrical Outlets (Refer to M111 for control requirements of Bacnet RTU and thermostat)
RTU-3	XYEA7A4B3AB2C112A2	JCI/Tempmaster	1	2575	225	2.90	1.0	907	79.0	58.0	55.9	49.6	105.0	54.0	53.0	12.0	14.8	R410A	47.0	65.2	4.5	67.0	38.0	3.40	2.40	0.0	460-3-60	19.7	20	25	5164.0	907	Enthalpy Economizer, VFD, Return Air Smoke Detector, Phase Monitor, BACNet MSTP, Louvered Hail Guards, Sloped Roof Curb, IECC Compliant Bacnet Thermostat, Powered Electrical Outlets (Refer to M111 for control requirements of Bacnet RTU and thermostat)
RTU-4	XP150C00R4B1BCA1A2	JCI/Tempmaster	1	5575	725	5.75	0.5	1311	79.0	58.0	54.1	48.1	105.0	136.0	124.1	10.6	13.5	R410A	47.0	145.4	9.7	135.0	90.0	3.20	2.05	0.0	460-3-60	34.9	45	45	5164.0	1408	Economizer with Barometric RLF, VFD, Return Air Smoke Detector, Phase Monitor, BACNet MSTP, Louvered Hail Guards, Sloped Roof Curb, IECC Compliant Bacnet Thermostat, Powered Electrical Outlets (Refer to M111 for control requirements of Bacnet RTU and thermostat)
RTU-5	XYE09A4B3AA1C111A2	JCI/Tempmaster	1	3700	500	2.40	0.5	763	79.0	58.0	54.9	48.7	105.0	85.7	79.6	12.0	15.8	R410A	47.0	97.5	6.1	96.5	54.5	3.40	2.26	0.0	460-3-60	25.0	25	25	5164.0	1071	Enthalpy Economizer, VFD, Return Air Smoke Detector, Phase Monitor, BACNet MSTP, Louvered Hail Guards, Sloped Roof Curb, IECC Compliant Thermostat, Powered Electrical Outlets (Refer to M111 for control requirements of Bacnet RTU and thermostat)
RTU-6	XYE06A4C1AB2C112A2	JCI/Tempmaster	1	2050	150	2.90	1.0	1238	79.0	58.0	49.8	47.0	105.0	54.9	53.3	12.5	15.0	R410A	47.0	57.2	4.5	55.0	30.0	3.60	2.30	8.2	460-3-60	15.2	20	20	5164.0	686	Enthalpy Economizer, VFD, Return Air Smoke Detector, Phase Monitor, BACNet MSTP, Louvered Hail Guards, Sloped Roof Curb, IECC Compliant Bacnet Thermostat, Powered Electrical Outlets (Refer to M111 for control requirements of Bacnet RTU and thermostat)
RTU-7	XYE08A4B3AB2C112A2	JCI/Tempmaster	1	3200	250	2.40	1.0	897	79.0	58.0	54.5	48.7	105.0	73.8	69.8	12.1	16.0	R410A	47.0	85.0	5.7	84.0	47.0	3.50	2.40	0.0	460-3-60	20.4	25	25	5164.0	1114	Enthalpy Economizer, VFD, Return Air Smoke Detector, Phase Monitor, BACNet MSTP, Louvered Hail Guards, Sloped Roof Curb, IECC Compliant Bacnet Thermostat, Powered Electrical Outlets (Refer to M111 for control requirements of Bacnet RTU and thermostat)
RTU-8	XYE05A4C1AB1A112A2	JCI/Tempmaster	1	1650	0	2.90	1.0	1358	79.0	58.0	50.3	47.0	105.0	44.5	42.3	12.5	15.0	R410A	47.0	48.9	3.6	46.0	26.0	3.60	2.30	8.2	460-3-60	11.7	15	15	5164.0	647	Manual Outside Air Damper, Phase Monitor, BACNet MSTP, Louvered Hail Guards, Sloped Roof Curb, IECC Compliant Bacnet Thermostat, Powered Electrical Outlets (Refer to M111 for control requirements of Bacnet RTU and thermostat)

CONDENSING UNITS / COOLING / ELECTRICAL

DESIGNATION	REFERENCE PRODUCT	SERVES	REFRIGERANT TYPE	SENSIBLE/TOTAL CAPACITY (MBH)	INDOOR DB / WB (°F)	OUTDOOR DB / WB (°F)	MAX OUTDOOR INTAKE AIR TEMP (DB °F)	MINIMUM SEER	VOLTS / PHASE	MINIMUM CIRCUIT AMPS	WEIGHT (LBS)	DIMENSIONS (H"xW"xD")	REMARKS
CU-1	MITSUBISHI PUY-A36NKA7	AHU-1	R-410-A	25.6/36	80 / 67	95 / 75	105	18.5	208 / 1	25	211	41-5/16" x 13" x 52-11/16"	

AIR HANDLERS / ELECTRICAL

DESIGNATION	REFERENCE PRODUCT	TYPE	AIR FLOW RATE (CFM)	FILTER TYPE	VOLTS / PHASE	MINIMUM CIRCUIT AMPS	WEIGHT (LBS)	DIMENSIONS (H"xW"xD")	REMARKS
AHU-1	MITSUBISHI PKA-A36K47	WALL MOUNT	705-810-920	HIGH-EFFICIENCY FILTER	208 / 1	1	46	46-1/16" x 11-5/8" x 14-3/8"	POWER SOURCE FROM CONDENSING UNIT. PROVIDE WIRED WALL MOUNT THERMOSTAT, DRAIN SOCKET, AND INTEGRAL CONDENSATE DRAIN OVERFLOW SENSOR/SHUTOFF. PROVIDE WITH PAC-UKPRC001-CN-1 BACNET GATEWAY AND ANY OTHER ASSOCIATED REQUIRED EQUIPMENT.

MECHANICAL EQUIPMENT SCHEDULE

DESIGNATION	DESCRIPTION	ELECTRICAL
EF-1, EF-2, EF-3, EF-4, EF-5, EF-6, EF-7, EF-8, EF-9, EF-10	BROAN AE110K FLEX SERIES CEILING MOUNT EXHAUST FAN RATED AT 110 CFM AT 0.15 IN WG, 1 SONE, RATED FOR CONTINUOUS OPERATION, AND CLEAN COVER GRILLE. PROVIDE WITH MODEL 611 ROOF CAP FOR SINGLE UNITS, MODEL 612 FOR A PAIR OF UNITS..	120V, 0.3 AMPS, 23.4 WATTS.

AIR DISTRIBUTION DEVICES

DESIGNATION SUPPLY X - Y CFM; RETURN OR EXHAUST X - Y DESIGNATION CFM

DESIGNATION	REFERENCE PRODUCT	TYPE	MAXIMUM AIR FLOW (CFM)	TOTAL PRESSURE (IN. WATER)	NECK SIZE (IN.)	PANEL SIZE (IN x IN)	MAX N.C.	FINISH	REMARKS
A	TITUS OMNI	SUPPLY	196	0.069	6"Ø	24"x24"	30	OFF-WHITE	CONTRACTOR TO VERIFY CEILING TYPE WITH ARCHITECTURAL CEILING PLANS. PROVIDE EACH SUPPLY DIFFUSER WITH FACTORY INSTALLED TITUS MOLDED R-6 INSULATION BLANK
B	TITUS OMNI	SUPPLY	279	0.072	8"Ø	24"x24"	30	OFF-WHITE	
C	TITUS OMNI	SUPPLY	382	0.082	10"Ø	24"x24"	30	OFF-WHITE	
D	TITUS OMNI	SUPPLY	471	0.085	12"Ø	24"x24"	30	OFF-WHITE	
E	TITUS OMNI	SUPPLY	535	0.079	14"Ø	24"x24"	30	OFF-WHITE	
F	TITUS TDC	SUPPLY	625	0.075	15"x15"	24"x24"	30	OFF-WHITE	
1	TITUS 50F	RETURN/ EXHAUST	114	0.053	6"x6"	24"x24"	30	OFF-WHITE	
2	TITUS 50F	RETURN/ EXHAUST	222	0.053	8"x8"	24"x24"	30	OFF-WHITE	
3	TITUS 50F	RETURN/ EXHAUST	354	0.053	10"x10"	24"x24"	30	OFF-WHITE	
4	TITUS 50F	RETURN/ EXHAUST	528	0.053	12"x12"	24"x24"	30	OFF-WHITE	
5	TITUS 50F	RETURN/ EXHAUST	1245	0.053	18"x18"	24"x24"	30	OFF-WHITE	
6	TITUS 50F	RETURN/ EXHAUST	1884	0.053	22"x22"	24"x24"	30	OFF-WHITE	

NOTE 1: CONTRACTOR SHALL VERIFY ALL CEILING FOR APPROPRIATE FRAME TYPE.
NOTE 2: CONTRACTOR SHALL FURNISH AND INSTALL ANY TRANSITIONS TO DIFFUSER/GRILLE NECK SIZE AS REQUIRED.

JSRa
JOHNSON SMITTHIPONG & ROSAMOND ASSOCIATES, INC.
5210 E Williams Cir • Ste 600 • Tucson, AZ 85711
(520) 547-7904 • www.jsrarchinc.com

Consultants:

Bernhard TME Engineering

54000 MARK A. ALVAREZ 11/03/22 Expires 12/31/23

WHITERIVER ADMINISTRATION OFFICE BUILDING

200 W HOSPITAL DR
WHITERIVER, AZ 85941

HHSI102201800007I

U. S. DEPARTMENT OF HEALTH AND HUMAN SERVICES
INDIAN HEALTH SERVICE
PHOENIX AREA OFFICE

No.	Date	Description

Issue Date:	11/3/2022
Project No:	21-020
Scale:	1/8" = 1'-0"
Drawn By:	Author
Checked By:	Checker

FINAL CD

Sheet Title:

SCHEDULES - HVAC

Sheet Number:

M601

Autodesk Docs://21-020 Whiteriver Admin v2022/21-020 10 MEP WRMOB 2022.rvt
11/2/2022 8:55:45 AM

COMcheck Software Version 4.1.1.0

Interior Lighting Compliance Certificate

Project Information

Energy Code: 2018 IECC
Project Title: Whiterive Indian Hospital
Project Type: New Construction

Construction Site:
200 West Hospital Drive
Whiteriver, AZ 85941

Owner/Agent:
Indian Health Services
AL

Designer/Contractor:
Bernhard TME
2990 N Swan Rd
Suite 227
Tucson, AZ 85712
(520) 323-2381

Additional Efficiency Package(s)

Reduced interior lighting power. Requirements are implicitly enforced within interior lighting allowance calculations.

Allowed Interior Lighting Power

A Area Category	B Floor Area (ft2)	C Allowed Watts / ft2	D Allowed Watts (B X C)
1-Whole Hospital (Healthcare Facility:Exam/Treatment)	14571	1.51	22002
		Total Allowed Watts =	22002

Proposed Interior Lighting Power

A Fixture ID : Description / Lamp / Wattage Per Lamp / Ballast	B Lamps/ Fixture	C # of Fixtures	D Fixture Watt.	E (C X D)
1-Whole Hospital (Healthcare Facility:Exam/Treatment)				
LED 1: A1: 2x4 Dimming: LED Panel 36W:	1	60	48	2850
LED 2: A2: 2x4 Dimming Em Battery: LED Panel 36W:	1	12	48	570
LED 3: A3: 2x4 0-10v Dimming: LED Panel 36W:	1	26	48	1235
LED 5: B1: 2x2 Direct/ Indirect: LED Panel 33W:	1	35	22	770
LED 6: B2: 2x2 Direct/ Indirect Em Battery: LED Panel 33W:	1	19	22	418
LED 10: D1: 1x4 Flanged: LED Panel 33W:	1	3	28	85
LED 1: C1: Cove Light: Other:	1	4	70	278
LED 11: E1: 4 Foot Strip: LED Linear 20W:	1	7	20	142
LED 11: B3: 2x2 Direct/ Indirect: Other:	1	1	34	34
LED 14: F1: 6" Recessed Can: LED Panel 19W:	1	30	18	525
LED 16: G1: Wall Sconce: LED Panel 19W:	1	11	18	198
			Total Proposed Watts =	7106

Interior Lighting PASSES: Design 68% better than code

Interior Lighting Compliance Statement

Compliance Statement: The proposed interior lighting design represented in this document is consistent with the building plans, specifications, and other calculations submitted with this permit application. The proposed interior lighting systems have been designed to meet the 2018 IECC requirements in COMcheck Version 4.1.1.0 and to comply with any applicable mandatory requirements listed in the Inspection Checklist.

Project Title: Whiterive Indian Hospital — Report date: 08/11/21
Data filename: \\jobfiles\2020\TUC\05-20-0061\2_Project Docs\2_Calcs\05-20-0061 COMCHECK.cck — Page 1 of 7

Jacob Clark - Electrical Engineer — Name - Title
Signature
08/11/21 — Date

Project Title: Whiterive Indian Hospital — Report date: 08/11/21
Data filename: \\jobfiles\2020\TUC\05-20-0061\2_Project Docs\2_Calcs\05-20-0061 COMCHECK.cck — Page 2 of 7

ELECTRICAL LEGEND

SYMBOL	DESCRIPTION	SYMBOL	DESCRIPTION	SYMBOL	DESCRIPTION
	LED LIGHT FIXTURE - CEILING MOUNTED		DUPLEX RECEPTACLE		MOTOR CONNECTION
	EMERGENCY LED LIGHT FIXTURE - CEILING MOUNTED, EMERGENCY UL 924 AUTOMATIC LOAD RELAY CONTROLLER		DUPLEX RECEPTACLE - MOUNT RECEPTACLE ABOVE COUNTERTOP. REFER TO ARCHITECTURAL ELEVATIONS		NON-FUSED DISCONNECT SWITCH
	LED COVE LIGHT FIXTURE		DUPLEX RECEPTACLE - GROUND FAULT INTERRUPTING		FUSED DISCONNECT SWITCH
	EMERGENCY LED COVE LIGHT FIXTURE, EMERGENCY UL 924 AUTOMATIC LOAD RELAY CONTROLLER		DUPLEX RECEPTACLE - GROUND FAULT INTERRUPTING - MOUNT RECEPTACLE ABOVE COUNTERTOP.		COMBINATION MOTOR STARTER AND DISCONNECT SWITCH
	STRIP LED LIGHT FIXTURE		QUADRAPLEX RECEPTACLE		DISCONNECT SWITCH PROVIDED WITH EQUIPMENT
	EMERGENCY STRIP LED LIGHT FIXTURE, EMERGENCY UL 924 AUTOMATIC LOAD RELAY CONTROLLER		QUADRAPLEX RECEPTACLE - MOUNT RECEPTACLE ABOVE COUNTERTOP. REFER TO ARCHITECTURAL ELEVATIONS		ENCLOSED CIRCUIT BREAKER
	LED CAN LIGHT FIXTURE		SPECIAL PURPOSE OUTLET. NEMA CONFIGURATION AS NOTED		MOTOR STARTER
	EMERGENCY LED CAN LIGHT FIXTURE, EMERGENCY UL 924 AUTOMATIC LOAD RELAY CONTROLLER		SPECIAL PURPOSE OUTLET - MOUNT RECEPTACLE ABOVE COUNTERTOP. REFER TO ARCHITECTURAL ELEVATIONS. NEMA CONFIGURATION AS NOTED		SURFACE MOUNTED PANELBOARD
	LED CAN WALL MOUNTED LIGHT FIXTURE		DUPLEX RECEPTACLE - FLUSH MOUNTED IN CEILING		PAD MOUNTED DRY TYPE TRANSFORMER
	EMERGENCY WALL MOUNTED LED CAN LIGHT FIXTURE, EMERGENCY UL 924 AUTOMATIC LOAD RELAY CONTROLLER		DUPLEX RECEPTACLE - FLUSH MOUNTED CAST FLOOR BOX		PAD MOUNTED ELECTRICAL EQUIPMENT
	POLE MOUNTED AREA LIGHT FIXTURE		QUADRAPLE RECEPTACLE - FLUSH MOUNTED CAST FLOOR BOX	ACP	ACCESS CONTROL PANEL AND POWER SUPPLY
	EMERGENCY EXIT SIGN, SURFACE MOUNTED, SINGLE FACE. SHADED AREA INDICATES SINGLE FACE. ARROW INDICATES CHEVRON EGRESS PATH.	J	JUNCTION BOX - FLUSH MOUNTED IN FLOOR	DC	DOOR CONTACT DOOR POSITION SWITCH
	EMERGENCY EXIT SIGN, WALL MOUNTED, SINGLE FACE. SHADED AREA INDICATES SINGLE FACE. ARROW INDICATES CHEVRON EGRESS PATH.	J	JUNCTION BOX - ABOVE CEILING OR WITHIN WALL	PS	POWER SUPPLY, DOOR HARDWARE
	EMERGENCY EXIT SIGN, SURFACE MOUNTED, DOUBLE FACE. SHADED AREA INDICATES DOUBLE FACES. ARROW INDICATES CHEVRON EGRESS PATH.	TGB	TELECOMMUNICATIONS GROUNDING BUSBAR	ES	ELECTRONIC DOOR STRIKE
	EMERGENCY EXIT SIGN, SURFACE MOUNTED, DOUBLE FACE. SHADED AREA INDICATES DOUBLE FACES. ARROW INDICATES CHEVRON EGRESS PATH.		WALL MOUNTED DATA OUTLET - WITH 1 DATA DROP - UNLESS NOTED OTHERWISE	IDP	OVERHEAD PAGING PANEL
OS	OCCUPANCY SENSOR SWITCH, CEILING MOUNTED		WALL MOUNTED DATA OUTLET - WITH 2 DATA DROPS - UNLESS NOTED OTHERWISE	S	SPEAKER - CEILING MOUNT
SLV	LOW VOLTAGE SWITCH		WALL MOUNTED DATA OUTLET - WITH 1 DATA DROP - UNLESS NOTED OTHERWISE	S	SPEAKER - WALL MOUNT
SM	MANUAL MOTOR STARTER WITH OVERLOADS, TOGGLE OPERATED		FLOOR MOUNTED DATA OUTLET - WITH 2 DATA DROPS - UNLESS NOTED OTHERWISE	S	FIRE ALARM SPEAKER STROBE DEVICE
SOS	OCCUPANCY SENSOR SWITCH, WALL MOUNTED		DATA OUTLET - CEILING MOUNTED	F	FIRE ALARM VISUAL DEVICE
	PUSH BUTTON	W	WIRELESS ACCESS POINT - CEILING MOUNTED	SD	SMOKE DETECTOR
	BRANCH CIRCUIT HOMERUN - PANEL & CIRCUIT NUMBER INDICATED		TELEPHONE TERMINAL BOARD	TS	TAMPER SWITCH
	CONDUIT CONCEALED IN OR BELOW FLOOR SLAB	CR	CARD READER	FS	FLOW SWITCH
	DOME CAMERA - CEILING MOUNT		WALL MOUNTED DATA OUTLET - WITH 1 DATA DROP - UNLESS NOTED OTHERWISE - MOUNTED ABOVE COUNTERTOP. REFERTO ARCHITECTURAL ELEVATIONS.		FIRE ALRAM PULL STATION
W	DOME CAMERA - WALL MOUNT			FACP	FIRE ALARM CONTROL PANEL
DVR	DIGITAL VIDEO RECORDER			FAAP	FIRE ALARM ANNUNCIATOR PANEL
NVR	NETWORK VIDEO RECORDER			DD	DUCT MOUNTED SMOKE DETECTOR

LIGHTING FIXTURE SCHEDULE

TYPE	MANUFACTURER	MODEL	LAMP	VOLTAGE	LOAD	DESCRIPTION
A1	LITHONIA	2AVL4 40LSE MDR SLD LP835	3500K, 4013 LUMEN	277	47.50 VA	LED 2X4 DIRECT/ INDIRECT, STEP LEVEL DIMMING
A2	LITHONIA	2AVL4 40LSE MDR EZ1 LP835	3500K, 4013 LUMEN	277	47.50 VA	LED 2X4 DIRECT/ INDIRECT, 0-10V DIMMING TO 1%
A3	LITHONIA	219VL4 50LSE MDR SLD LP835	3500K, 4948 LUMEN	277	61.50 VA	LED 2X4 DIRECT/ INDIRECT, STEP LEVEL DIMMING
B1	LITHONIA	2AVL2 20LSE MDR EZ1 LP835	3500K, 2063 LUMEN	277	22.00 VA	LED 2X2 DIRECT/ INDIRECT
B2	LITHONIA	2AVL2 20LSE MDR EZ1 LP835	3500K, 3108 LUMEN	277	34.00 VA	LED 2X2 DIRECT/ INDIRECT, 0-10V DIMMING TO 1%
B3	LITHONIA	2AVL2 30LSE MDR SLD LP835	3500K, 3108 LUMEN	277	34.00 VA	LED 2X2 DIRECT/ INDIRECT
C1	MARK ARCHITECTURAL LIGHTING	SPR LED QS LDP 12FT RLP FL 80CRI 30K 600LMF NODIM MVOLT	3500K, 600 LUMEN	277	69.60 VA	LED FLANGED LINEAR COVE LIGHT
D1	LITHONIA	GTLF4 33L A12125 EZ1 LP835	3500K, 3332 LUMEN	277	28.40 VA	LED 1X4 FLANGED
E1	LITHONIA	CLX L48 3000LM SEF FDL WD MVOLT GZ10 35K 80CRI WH HC36M12 WGCLX 48	3500K, 3104 LUMEN	277	20.32 VA	LED 4 FOOT STRIP, CHAIN SUSPENDED, FLAT LENSE, WIREGUARD
F1	LITHONIA	LDN6 35/15 L06 AR LSS MVOLT GZ10	3500K, 1500 LUMEN	277	17.52 VA	LED 6" RECESSED CAN
G1	LITHONIA	WDGE1 P2 35K 80CRI VW MVOLT PE DDBXD	3500K, 1925 LUMEN	277	18.00 VA	LED WALL SCONCE
X1	LITHONIA	LQM SW 3G MVOLT	LED	277	0.07 VA	LED EXIT SIGN

GENERAL NOTES

1. EACH CIRCUIT SHALL HAVE AN EQUIPMENT GROUNDING CONDUCTOR. EQUIPMENT GROUND CONDUCTOR SIZE SHALL NOT BE LESS THAN #10 AWG OR AS INDICATED ON THE DRAWINGS.
2. ALL CONDUCTORS SHALL BE COPPER.
3. MINIMUM CONDUIT SIZE SHALL BE 3/4" UNLESS OTHERWISE NOTED.
4. ALL WIRING DEVICES SHALL BE INSTALLED PLUMB, SQUARE, AND TRUE; AND ALL DEVICES INSTALLED AT A SINGLE LOCATION SHALL BE ALIGNED.
5. MINIMUM WIRE SIZE SHALL BE #10 AWG UNLESS OTHERWISE SPECIFIED.
6. ALL WORK SHALL COMPLY WITH THE 2017 EDITION OF THE NATIONAL ELECTRICAL CODE.
7. CONTRACTOR SHALL REFER TO THE ARCHITECTURAL ELEVATIONS AND MILLWORK DETAILS FOR EXACT LOCATIONS OF ALL WIRING DEVICES.
8. CONTRACTOR SHALL REFER TO THE ARCHITECTURAL REFLECTED CEILING PLAN FOR EXACT LOCATION OF CEILING MOUNTED LIGHT FIXTURES.
9. CONTRACTOR SHALL REFER TO THE ARCHITECTURAL, STRUCTURAL, MECHANICAL, VENDOR SITE SPECIFIC, AND OTHER DISCIPLINE DRAWINGS FOR COMPLETE INFORMATION.
10. THE ELECTRICAL CONTRACTOR SHALL BE RESPONSIBLE FOR UPDATING SCHEDULES IN ALL ELECTRICAL PANELS THAT ARE AFFECTED BY THE WORK. UPDATED SCHEDULES ARE TO BE COMPUTER GENERATED AND PRINTED.
11. THE ELECTRICAL CONTRACTOR SHALL BE RESPONSIBLE FOR MARKING ALL SWITCHES, RECEPTACLES, AND FIXED EQUIPMENT WITH THE BRANCH CIRCUIT PANEL NAME AND NUMBER SERVING EACH DEVICE.
12. ALL CONDUIT BE INSTALLED AS HIGH AS POSSIBLE (MOUNT TO BOTTOM OF STRUCTURE) TO AVOID CONFLICTS WITH DUCTWORK AND PIPING. THE ELECTRICAL CONTRACTOR SHALL COORDINATE INSTALLATION WITH THE MECHANICAL CONTRACTOR.
13. MULTI-WIRE BRANCH CIRCUITS (CIRCUITS CONNECTED WITH A COMMON NEUTRAL) SHALL NOT BE ALLOWED. MORE THAN THREE CIRCUITS IN ANY ONE CONDUIT IS NOT ALLOWED WITHOUT WRITTEN PERMISSION FROM THE ENGINEER.
14. THE ELECTRICAL CONTRACTOR SHALL REFER TO MECHANICAL PLANS FOR THERMOSTAT LOCATIONS AND SHALL ROUGH-IN BACK BOX AND CONDUIT STUB UPS FOR THERMOSTATS. THE ELECTRICAL CONTRACTOR SHALL COORDINATE WITH THE MECHANICAL CONTRACTOR ON ROUGH-IN REQUIREMENTS FOR OTHER MECHANICAL DEVICES MOUNTED IN WALLS.
15. LOW-VOLTAGE WIRING INSTALLED ABOVE INACCESSIBLE CEILINGS SHALL BE IN CONDUIT. LOW-VOLTAGE SYSTEM CONDUITS SHALL BE INSTALLED WITHIN ABOVE AN ACCESSIBLE CEILING SPACE TO CABLE TRAY PATH. JUNCTION BOXES AND ELECTRICAL DEVICES INSTALLED ABOVE CEILING SHALL BE INSTALLED ABOVE ACCESSIBLE CEILING SPACE. JUNCTION BOXES INSTALLED FOR LIGHTING FIXTURES LOCATED IN HARD CEILINGS SHALL BE ACCESSIBLE FORM THE LIGHT FIXTURE CEILING PENETRATION.
16. EXISTING INFORMATION SHOWN WAS GATHERED FROM "AS BUILT" DRAWINGS AND JOBSITE VISITS. EVERY ATTEMPT HAS BEEN MADE TO SHOW EXISTING SERVICES CORRECTLY. HOWEVER, CONTRACTOR SHALL BE RESPONSIBLE TO FIELD VERIFY ALL EXISTING CONDITIONS AND MAKE ALL NECESSARY ADJUSTMENTS IN THE FIELD AT NO EXTRA COST TO THE OWNER/ARCHITECT/ENGINEER.

JSRa
JOHNSON SMITTHIPONG & ROSAMOND ASSOCIATES, INC.
5210 E Williams Cir • Ste 600 • Tucson, AZ 85711
(520) 547-7904 • www.jsrarchinc.com

Consultants:

Bernhard TME Engineering

REGISTERED PROFESSIONAL ENGINEER 64509 JACOB S. CLARK 11/03/22 EXPIRES 09/30/24

WHITERIVER ADMINISTRATION OFFICE BUILDING

200 W HOSPITAL DR
WHITERIVER, AZ 85941

HHSI102201800007I

U. S. DEPARTMENT OF HEALTH AND HUMAN SERVICES
INDIAN HEALTH SERVICE
PHOENIX AREA OFFICE

No.	Date	Description

Issue Date:	11/3/2022
Project No:	21-020
Scale:	1/8" = 1'-0"
Drawn By:	RMW
Checked By:	JSC

FINAL CD

Sheet Title:

SCHEDULES, LEGENDS AND GENERAL NOTES

Sheet Number:

E001

Autodesk Docs://21-020 Whiteriver Admin v2022/21-020 10 MEP WRMOB 2022.rvt
11/2/2022 10:06:05 AM

MECHANICAL EQUIPMENT CONNECTION SCHEDULE

EQUIPMENT ID	EQUIPMENT SERVED	MOTOR HP	MOTOR KW	DEVICE	DEVICE PROVIDED BY	SIZE	ENCLOSURE	VOLTAGE	PHASE	LOAD	WIRE AND CONDUIT SIZE	NOTES
M-AHU-1	AHU-1	-	0.28	FUSED DISCONNECT	ELECTRICAL	30A/2AF	NEMA 1	208 V	2	208 VA	2-#10,1-#10 G, 3/4" C	INDOOR UNIT IS FED FROM OUTDOOR UNIT.
M-CU-1	CU-1		-	FUSED DISCONNECT	ELECTRICAL	30A/30AF	NEMA 3R	208 V	2	4160 VA	2-#10,1-#10 G, 3/4" C	OUTDOOR UNIT FEEDS INDOOR UNIT.
M-EF-1	EF-1	-	-	MANUAL MOTOR STARTER SWITCH	ELECTRICAL	20 A	NEMA 1	120 V	1	36 VA	2-#10,1-#10 G, 3/4" C	
M-EF-2	EF-2	-	-	MANUAL MOTOR STARTER SWITCH	ELECTRICAL	20 A	NEMA 1	120 V	1	36 VA	2-#10,1-#10 G, 3/4" C	
M-EF-3	EF-3	-	-	MANUAL MOTOR STARTER SWITCH	ELECTRICAL	20 A	NEMA 1	120 V	1	36 VA	2-#10,1-#10 G, 3/4" C	
M-EF-4	EF-4	-	-	MANUAL MOTOR STARTER SWITCH	ELECTRICAL	20 A	NEMA 1	120 V	1	36 VA	2-#10,1-#10 G, 3/4" C	
M-EF-5	EF-5	-	-	MANUAL MOTOR STARTER SWITCH	ELECTRICAL	20 A	NEMA 1	120 V	1	36 VA	2-#10,1-#10 G, 3/4" C	
M-EF-6	EF-6	-	-	MANUAL MOTOR STARTER SWITCH	ELECTRICAL	20 A	NEMA 1	120 V	1	36 VA	2-#10,1-#10 G, 3/4" C	
M-EF-7	EF-7	-	-	MANUAL MOTOR STARTER SWITCH	ELECTRICAL	20 A	NEMA 1	120 V	1	36 VA	2-#10,1-#10 G, 3/4" C	
M-EF-8	EF-8	-	-	MANUAL MOTOR STARTER SWITCH	ELECTRICAL	20 A	NEMA 1	120 V	1	36 VA	2-#10,1-#10 G, 3/4" C	
M-EF-9	EF-9	-	-	MANUAL MOTOR STARTER SWITCH	ELECTRICAL	20 A	NEMA 1	120 V	1	36 VA	2-#10,1-#10 G, 3/4" C	
M-EF-10	EF-10	-	-	MANUAL MOTOR STARTER SWITCH	ELECTRICAL	20 A	NEMA 1	120 V	1	36 VA	2-#10,1-#10 G, 3/4" C	
M-JIB CRANE	JIB CRANE	0.5	1176	FUSED DISCONNECT	ELECTRICAL	30A/15AF	NEMA 3R	120 V	1	1176 VA	2-#10,1-#10 G, 3/4" C	
M-RTU-1	RTU-1	2.4	-	FUSED DISCONNECT	ELECTRICAL	30A/25AF	NEMA 3R	480 V	3	13685 VA	3-#10,1-#10 G, 3/4" C	
M-RTU-2	RTU-2	2.9	-	FUSED DISCONNECT	ELECTRICAL	30A/25AF	NEMA 3R	480 V	3	13087 VA	3-#10,1-#10 G, 3/4" C	
M-RTU-3	RTU-3	2.9	-	FUSED DISCONNECT	ELECTRICAL	30A/25AF	NEMA 3R	480 V	3	13087 VA	3-#10,1-#10 G, 3/4" C	
M-RTU-4	RTU-4	5.75	-	FUSED DISCONNECT	ELECTRICAL	60A/45AF	NEMA 3R	480 V	3	23185 VA	3-#8,1-#10 G, 3/4" C	
M-RTU-5	RTU-5	2.4	-	FUSED DISCONNECT	ELECTRICAL	30A/25AF	NEMA 3R	480 V	3	16608 VA	3-#10,1-#10 G, 3/4" C	
M-RTU-6	RTU-6	2.9	-	FUSED DISCONNECT	ELECTRICAL	30A/20AF	NEMA 3R	480 V	3	10098 VA	3-#10,1-#10 G, 3/4" C	
M-RTU-7	RTU-7	2.4	-	FUSED DISCONNECT	ELECTRICAL	30A/25AF	NEMA 3R	480 V	3	13552 VA	3-#10,1-#10 G, 3/4" C	
M-RTU-8	RTU-8	2.9	-	FUSED DISCONNECT	ELECTRICAL	30A/15AF	NEMA 3R	480 V	3	7773 VA	3-#10,1-#10 G, 3/4" C	

PLUMBING EQUIPMENT CONNECTION SCHEDULE

EQUIPMENT ID	EQUIPMENT SERVED	MOTOR HP	MOTOR KW	DEVICE	DEVICE PROVIDED BY	SIZE	ENCLOSURE	VOLTAGE	PHASE	LOAD	WIRE AND CONDUIT SIZE	NOTES
P-HW/RP-1	HW/RP-1	-	0.028	MANUAL MOTOR STARTER SWITCH	ELECTRICAL	20 A	NEMA 1	120 V	1	28 VA	2-#10,1-#10 G, 3/4" C	
P-WH-1	WH-1	-	18.0	FUSED DISCONNECT	ELECTRICAL	30A/30AF	NEMA 1	480 V	3	18000 VA	3-#10,1-#10 G, 3/4" C	

JOHNSON SMITTHIPONG & ROSAMOND ASSOCIATES, INC.
5210 E Williams Cir • Ste 600 • Tucson, AZ 85711
(520) 547-7904 • www.jsrarchinc.com

Consultants:

Bernhard TME Engineering

WHITERIVER ADMINISTRATION OFFICE BUILDING

200 W HOSPITAL DR
WHITERIVER, AZ 85941

HHSI102201800007I

U. S. DEPARTMENT OF HEALTH AND HUMAN SERVICES
INDIAN HEALTH SERVICE
PHOENIX AREA OFFICE

No.	Date	Description

Issue Date:	11/3/2022
Project No:	21-020
Scale:	
Drawn By:	Author
Checked By:	Checker

FINAL CD

Sheet Title:

EQUIPMENT CONNECTION SCHEDULES

Sheet Number:

E002

Autodesk Docs://21-020 Whiteriver Admin v2022/21-020 10 MEP WRMOB 2022.rvt
11/2/2022 10:06:06 AM

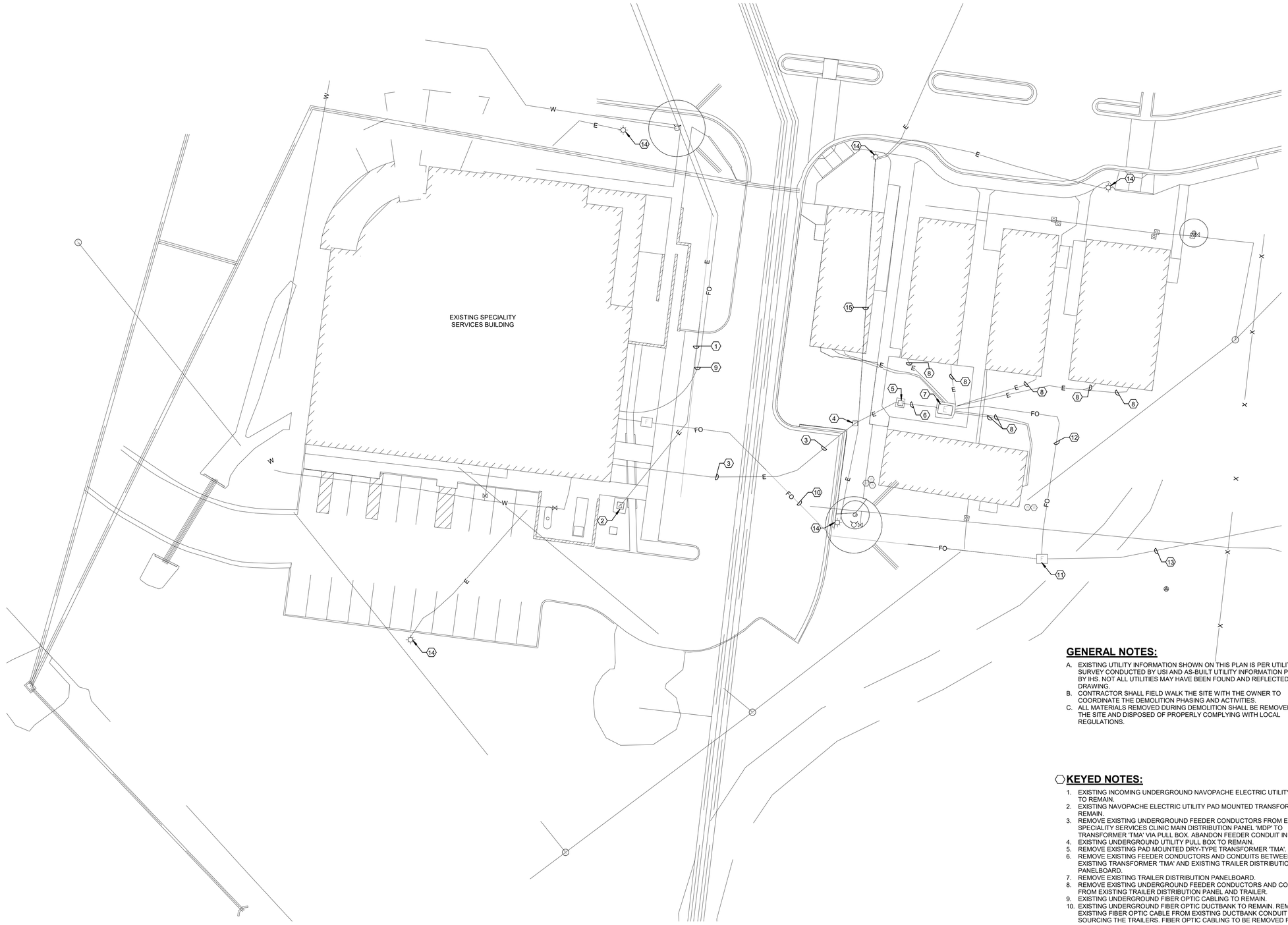

A2 SITE PLAN - DEMOLITION
1" = 20'-0"

GENERAL NOTES:

A. EXISTING UTILITY INFORMATION SHOWN ON THIS PLAN IS PER UTILITY LOCATE SURVEY CONDUCTED BY USI AND AS-BUILT UTILITY INFORMATION PROVIDED BY IHS. NOT ALL UTILITIES MAY HAVE BEEN FOUND AND REFLECTED ON THIS DRAWING.
B. CONTRACTOR SHALL FIELD WALK THE SITE WITH THE OWNER TO COORDINATE THE DEMOLITION PHASING AND ACTIVITIES.
C. ALL MATERIALS REMOVED DURING DEMOLITION SHALL BE REMOVED FROM THE SITE AND DISPOSED OF PROPERLY COMPLYING WITH LOCAL REGULATIONS.

KEYED NOTES:

1. EXISTING INCOMING UNDERGROUND NAVOPACHE ELECTRIC UTILITY PRIMARY TO REMAIN.
2. EXISTING NAVOPACHE ELECTRIC UTILITY PAD MOUNTED TRANSFORMER TO REMAIN.
3. REMOVE EXISTING UNDERGROUND FEEDER CONDUCTORS FROM EXISTING SPECIALITY SERVICES CLINIC MAIN DISTRIBUTION PANEL 'MDP' TO TRANSFORMER 'TMA' VIA PULL BOX. ABANDON FEEDER CONDUIT IN PLACE.
4. EXISTING UNDERGROUND UTILITY PULL BOX TO REMAIN.
5. REMOVE EXISTING PAD MOUNTED DRY-TYPE TRANSFORMER 'TMA'.
6. REMOVE EXISTING FEEDER CONDUCTORS AND CONDUITS BETWEEN EXISTING TRANSFORMER 'TMA' AND EXISTING TRAILER DISTRIBUTION PANELBOARD.
7. REMOVE EXISTING TRAILER DISTRIBUTION PANELBOARD.
8. REMOVE EXISTING UNDERGROUND FEEDER CONDUCTORS AND CONDUIT FROM EXISTING TRAILER DISTRIBUTION PANEL AND TRAILER.
9. EXISTING UNDERGROUND FIBER OPTIC CABLING TO REMAIN.
10. EXISTING UNDERGROUND FIBER OPTIC DUCTBANK TO REMAIN. REMOVE EXISTING FIBER OPTIC CABLE FROM EXISTING DUCTBANK CONDUIT SOURCING THE TRAILERS. FIBER OPTIC CABLING TO BE REMOVED FROM EXISTING FIBER PATCH PANEL WITHIN SPECIALTY SERVICE BUILDING TO THE TRAILERS.
11. EXISTING UNDERGROUND FIBER OPTIC VAULT TO REMAIN.
12. REMOVE EXISTING FIBER OPTIC CABLING FROM EXISTING UNDERGROUND FIBER OPTIC VAULT. CUT EXISTING UNDERGROUND CONDUITS BACK TO WITHIN FIVE FEET OF NEW ADMINISTRATION OFFICE BUILDING FOR RE-UTILIZATION AND CAP TO SOURCE NEW FIBER OPTIC CABLING TO NEW ADMINISTRATION OFFICE BUILDING. REMOVE REMAINING UNDERGROUND CONDUITS.
13. EXISTING UNDERGROUND FIBER OPTIC CABLING TO WHITERIVER INDIAN HOSPITAL TO REMAIN.
14. EXISTING SITE LIGHTING POLE AND ASSOCIATED UNDERGROUND BRANCH CIRCUIT TO REMAIN.
15. REMOVE SECTION OF UNDERGROUND LIGHTING CONDUIT AND CIRCUIT TO ACCOMMODATE NEW ADMINISTRATION OFFICE BUILDING FOOTPRINT.

JOHNSON SMITTHIPONG & ROSAMOND ASSOCIATES, INC.
5210 E Williams Cir • Ste 600 • Tucson, AZ 85711
(520) 547-7904 • www.jsrarchinc.com

Consultants:

Bernhard TME Engineering

WHITERIVER ADMINISTRATION OFFICE BUILDING

200 W HOSPITAL DR
WHITERIVER, AZ 85941

HHSI102201800007I

U. S. DEPARTMENT OF HEALTH AND HUMAN SERVICES
INDIAN HEALTH SERVICE
PHOENIX AREA OFFICE

No.	Date	Description

Issue Date:	11/3/2022
Project No:	21-020
Scale:	1" = 20'-0"
Drawn By:	RMW
Checked By:	JSC

FINAL CD

Sheet Title:

SITE PLAN - DEMOLITION

Sheet Number:

E101

Autodesk Docs://21-020 Whiteriver Admin v2022/21-020 10 MEP WRMOB 2022.rvt
11/2/2022 10:06:06 AM

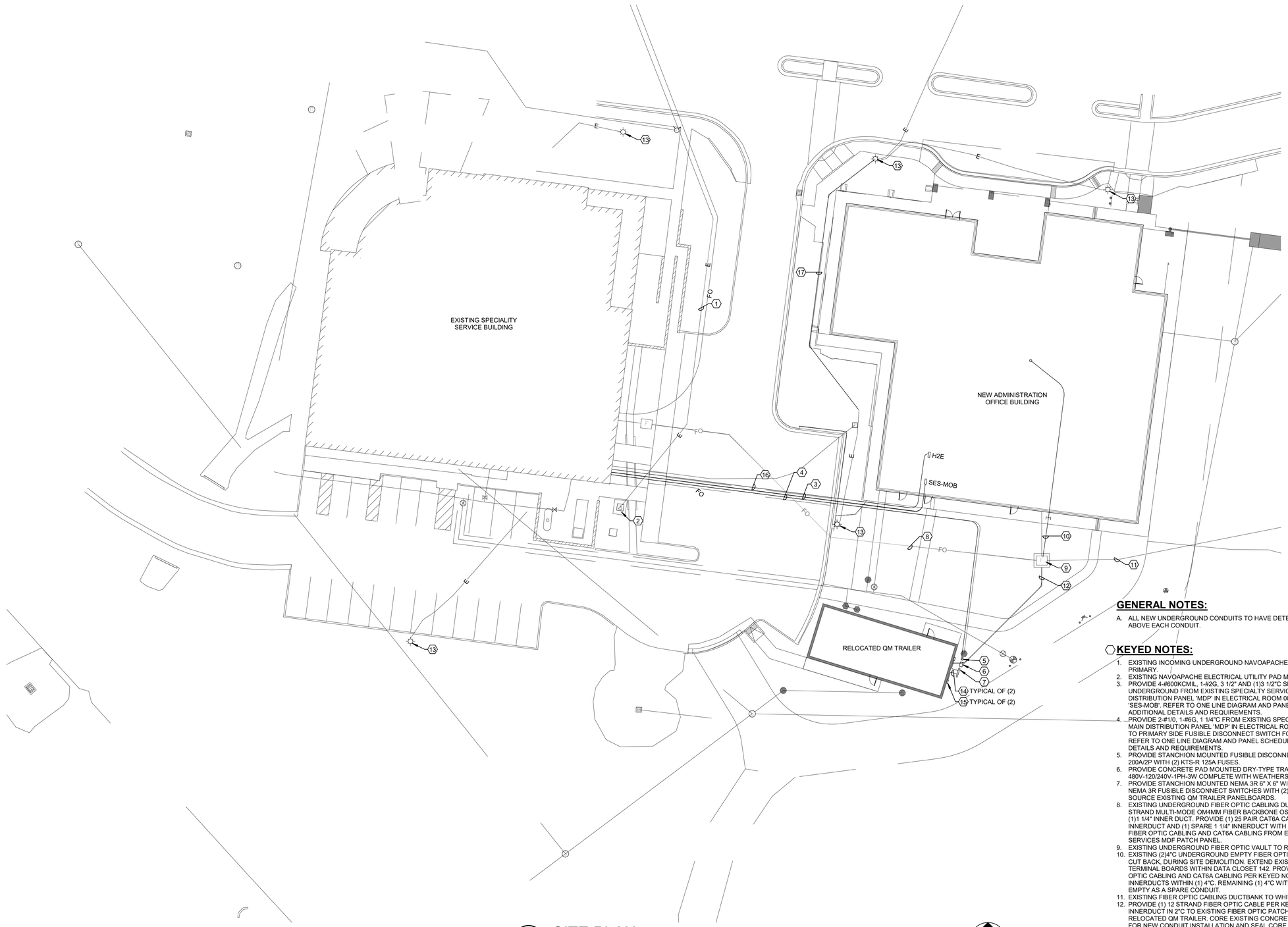

A2 SITE PLAN
1" = 20'-0"

GENERAL NOTES:

A. ALL NEW UNDERGROUND CONDUITS TO HAVE DETECTABLE WARNING TAPE ABOVE EACH CONDUIT.

KEYED NOTES:

1. EXISTING INCOMING UNDERGROUND NAVOAPACHE ELECTRICAL UTILITY PRIMARY.
2. EXISTING NAVOAPACHE ELECTRICAL UTILITY PAD MOUNTED TRANSFORMER.
3. PROVIDE 4-#600KCMIL, 1-#2G, 3 1/2" AND (1)3 1/2"C SPARE WITH PULL WIRE UNDERGROUND FROM EXISTING SPECIALTY SERVICE BUILDING MAIN DISTRIBUTION PANEL 'MDP' IN ELECTRICAL ROOM 002 TO DISTRIBUTION PANEL 'SES-MOB'. REFER TO ONE LINE DIAGRAM AND PANEL SCHEDULES FOR ADDITIONAL DETAILS AND REQUIREMENTS.
4. PROVIDE 2-#1/0, 1-#6G, 1 1/4"C FROM EXISTING SPECIALTY SERVICE BUILDING MAIN DISTRIBUTION PANEL 'MDP' IN ELECTRICAL ROOM 002 UNDERGROUND TO PRIMARY SIDE FUSIBLE DISCONNECT SWITCH FOR TRANSFORMER 'T-QM'. REFER TO ONE LINE DIAGRAM AND PANEL SCHEDULES FOR ADDITIONAL DETAILS AND REQUIREMENTS.
5. PROVIDE STANCHION MOUNTED FUSIBLE DISCONNECT SWITCH NEMA 3R, 200A/2P WITH (2) KTS-R 125A FUSES.
6. PROVIDE CONCRETE PAD MOUNTED DRY-TYPE TRANSFORMER 'T-QM', 50KVA, 480V-120/240V-1PH-3W COMPLETE WITH WEATHERSHIELD.
7. PROVIDE STANCHION MOUNTED NEMA 3R 6" X 6" WIREWAY WITH (2) 200A/2P NEMA 3R FUSIBLE DISCONNECT SWITCHES WITH (2) KTN-R 125A FUSES TO SOURCE EXISTING QM TRAILER PANELBOARDS.
8. EXISTING UNDERGROUND FIBER OPTIC CABLING DUCTBANK. PROVIDE (1) 12 STRAND MULTI-MODE OM4MM FIBER BACKBONE OSP RATED CABLES IN (1)1 1/4" INNER DUCT. PROVIDE (1) 25 PAIR CAT6A CABLE WITHIN (1)1 1/4" INNERDUCT AND (1) SPARE 1 1/4" INNERDUCT WITH PULL WIRE. PROVIDE FIBER OPTIC CABLING AND CAT6A CABLING FROM EXISTING SPECIALTY SERVICES MDF PATCH PANEL.
9. EXISTING UNDERGROUND FIBER OPTIC VAULT TO REMAIN.
10. EXISTING (2)4"C UNDERGROUND EMPTY FIBER OPTIC DUCTBANK CONDUITS, CUT BACK, DURING SITE DEMOLITION. EXTEND EXISTING (2)4"C TO PLYWOOD TERMINAL BOARDS WITHIN DATA CLOSET 142. PROVIDE (1) 12 STRAND FIBER OPTIC CABLING AND CAT6A CABLING PER KEYED NOTE 2 WITHIN (2) 1 1/4" INNERDUCTS WITHIN (1) 4"C. REMAINING (1) 4"C WITH PULL WIRE TO REMAIN EMPTY AS A SPARE CONDUIT.
11. EXISTING FIBER OPTIC CABLING DUCTBANK TO WHITERIVER INDIAN HOSPITAL.
12. PROVIDE (1) 12 STRAND FIBER OPTIC CABLE PER KEYED NOTE 2 WITHIN 1" INNERDUCT IN 2"C TO EXISTING FIBER OPTIC PATCH PANEL WITHIN RELOCATED QM TRAILER. CORE EXISTING CONCRETE FIBER OPTIC VAULT FOR NEW CONDUIT INSTALLATION AND SEAL CORE AROUND CONDUIT UPON COMPLETION OF INSTALLATION.
13. EXISTING SITE LIGHTING POLE LIGHT TO REMAIN.
14. PROVIDE 3-#1/0, 1-#6G, 1 1/2"C UNDERGROUND FROM FUSIBLE DISCONNECT SWITCH ON WIREWAY TO EXISTING QM TRAILER PANELBOARDS.
15. EXISTING QM TRAILER PANELBOARDS.
16. PROVIDE 4-#8, 1-#10G, 1"C UNDERGROUND FROM EXISTING SPECIALTY SERVICE BUILDING PANEL 'H1E' LOCATED WITHIN ELECTRICAL ROOM FM115 ON THE FIRST FLOOR ADJACENT TO COLUMN E3 TO PANEL 'H2E'. REFER TO ONE LINE DIAGRAM AND PANEL SCHEDULES FOR ADDITIONAL DETAILS AND REQUIREMENTS.
17. EXTEND CONDUIT AND LIGHTING BRANCH CIRCUIT AS REQUIRED OUTSIDE OF THE NEW ADMINSTRATION OFFICE BUILDING FOOTPRINT AND RECONNECT.

JSRa
JOHNSON SMITTHIPONG & ROSAMOND ASSOCIATES, INC.
5210 E Williams Cir • Ste 600 • Tucson, AZ 85711
(520) 547-7904 • www.jsrarchinc.com

Consultants:

Bernhard TME Engineering

REGISTERED ARCHITECT 64509 JACOB S. CLARK 11/03/22 Expires 09/30/24

WHITERIVER ADMINISTRATION OFFICE BUILDING

200 W HOSPITAL DR
WHITERIVER, AZ 85941

HHSI102201800007I

U. S. DEPARTMENT OF HEALTH AND HUMAN SERVICES
INDIAN HEALTH SERVICE
PHOENIX AREA OFFICE

No.	Date	Description

Issue Date:	11/3/2022
Project No:	21-020
Scale:	1" = 20'-0"
Drawn By:	RMW
Checked By:	JSC

FINAL CD

Sheet Title:

SITE PLAN

Sheet Number:

E102

Autodesk Docs://21-020 Whiteriver Admin v2022/21-020 10 MEP WRMOB 2022.rvt
11/2/2022 10:06:07 AM

GENERAL NOTES:

A. CONTRACTOR TO COORDINATE ALL FIBER OPTIC CABLING AND CAT6A CABLING TERMINATIONS WITH WHITERIVER SERVICE UNIT.

KEYED NOTES:

1. PROVIDE 4-#600KCMIL, 1-#2G WITHIN (1) 3 1/2"C AND (1) 3 1/2"C SPARE WITH PULL WIRE FROM EXISTING 'MDP' TO SES-MOB'.
2. PROVIDE 2-#1/0, 1-#6G, 1 1/4"C UNDERGROUND FEEDER TO RELOCATED QM TRAILER.
3. EXISTING UNDERGROUND FIBER OPTIC CABLING DUCT BANK TO EXISTING FIBER OPTIC VAULT. PROVIDE (1) 12 STRAND MULTI-MODE OM4MM FIBER OPTIC BACKBONE OSP RATED IN 1 1/4" INNERDUCT TO RELOCATED QM TRAILER WITH (2) EMPTY 1 1/4" INNERDUCTS WITH PULL WIRE.
4. PROVIDE (1) 12 STRAND MULTI-MODE OM4MM FIBER OPTIC BACKBONE OSP RATED WITHIN (1) EMPTY 1 1/4" INNERDUCT AND (1) 25 PAIR CAT6A TSP WITHIN (1) EMPTY 1 1/4" INNERDUCT TO DATA CLOSET 142 WITHIN ADMINISTRATION OFFICE BUILDING.
5. FIBER OPTIC CABLING TO RELOCATED QM TRAILER TERMINATE TO NEW FIBER OPTIC PATCH PANEL WITHIN EXISTING MDF ROOM.
6. TERMINATE FIBER OPTIC CABLING AND 25 PAIR CAT6A CABLE TO ADMINISTRATION OFFICE BUILDING TO NEW PATCH PANELS WITHIN EXISTING MDF ROOM.
7. PROVIDE 4-#8, 1-#10G, 1"C TO PANEL 'H2E' WITHIN ADMINISTRATION OFFICE BUILDING.
8. PROVIDED 4-#8, 1-#10G, 1"C UP TO EXISTING PANEL 'H1E' IN EXISTING ELECTRICAL ROOM ON FIRST FLOOR.

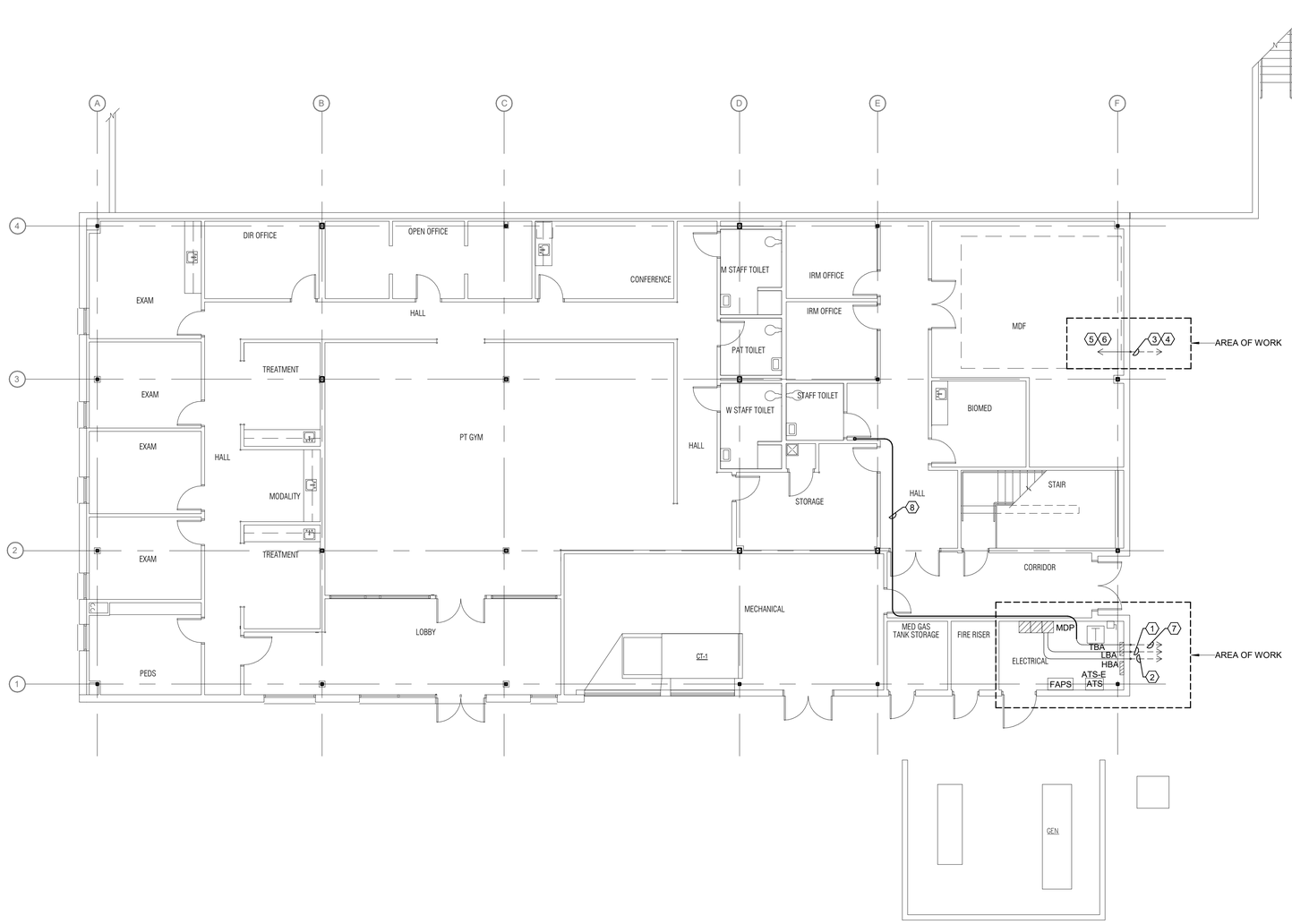

A2 SSB BUILDING GROUND FLOOR POWER TAP PLAN
1/8" = 1'-0"

JOHNSON SMITTHIPONG & ROSAMOND ASSOCIATES, INC.
5210 E Williams Cir • Ste 600 • Tucson, AZ 85711
(520) 547-7904 • www.jsrarchinc.com

Consultants:

Bernhard TME Engineering

REGISTERED PROFESSIONAL ENGINEER 64509 JACOB S. CLARK 11/03/22 EXPIRES 09/30/24 ARIZONA U.S.A.

WHITERIVER ADMINISTRATION OFFICE BUILDING

200 W HOSPITAL DR
WHITERIVER, AZ 85941

HHSI102201800007I

U. S. DEPARTMENT OF HEALTH AND HUMAN SERVICES
INDIAN HEALTH SERVICE
PHOENIX AREA OFFICE

No.	Date	Description

Issue Date:	11/3/2022
Project No:	21-020
Scale:	1/8" = 1'-0"
Drawn By:	Author
Checked By:	Checker

FINAL CD

Sheet Title:

SITE PLAN - SSB BUILDING

Sheet Number:

E103

Autodesk Docs://21-020 Whiteriver Admin v2022/21-020 10 MEP WRMOB 2022.rvt
11/2/2022 10:06:07 AM

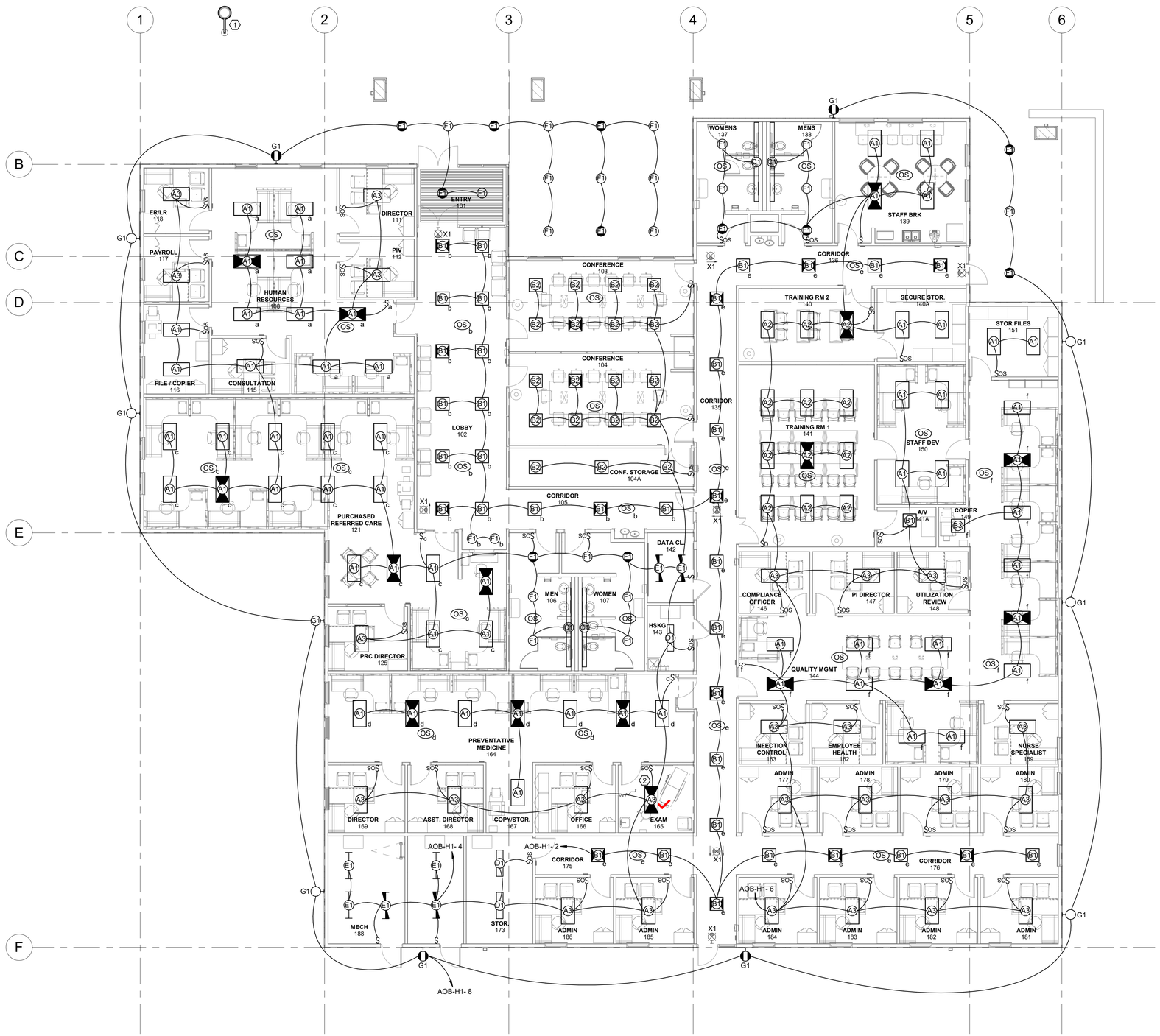

A1 LIGHTING PLAN
1/8" = 1'-0"

GENERAL NOTES:

A. ALL LIGHTING CONTROLS SHALL COMPLY WITH ASHRAE 90.1 - 2019 CODE, ARTICLE 9.4.
B. LIGHTING CONTROL COMPONENTS SHALL BE nLIGHT OR APPROVED EQUAL.
ENCLOSED OFFICE, FILE/COPIER, BREAKROOM, DEVICES:
a. **nWSXA PST LVDX** DUAL TECHNOLOGY WALL SWITCH OCCUPANCY SENSOR. CONFIGURED FOR LIGHTING TO AUTOMATICALLY COME ON A 50%.
b. **nPP16 EFP PA** POWER/RELAY PACK.
c. EMERGENCY UL 924 AUTOMATIC LOAD RELAY
C. OPEN OFFICES (MODULAR FURNITURE) DEVICES:
a. **nPODMA 2L WH** WALL SWITCH.
b. **nCM PDT 9 RJB** 20M DUAL TECHNOLOGY CEILING MOUNTED OCCUPANCY SENSOR.
c. **nPP16 EFP PA** POWER/ RELAY PACK.
d. EMERGENCY UL 924 AUTOMATIC LOAD RELAY
D. CONFERENCE AND TRAINING ROOMS:
a. **nPODMA DX WH** WALL DIMMING SWITCH.
b. **uCM PDT 9 RJB** 20M DUAL TECHNOLOGY CEILING MOUNTED OCCUPANCY SENSOR.
c. **uPP16 EFP PA** POWER/ RELAY PACK.
d. EMERGENCY UL 924 AUTOMATIC LOAD RELAY
E. CORRIDORS AND LOBBY DEVICES:
a. **uPOD MA WH** WALL SWITCH.
b. **uCM PDT 10 RJB** 20M DUAL TECHNOLOGY CEILING MOUNTED SENSORS.
c. EMERGENCY UL 924 AUTOMATIC LOAD RELAY
F. RESTROOM DEVICES:
a. **uPODMA DX WH** WALL SWITCH
b. **uCM PDT 9 RJB** 20M DUAL TECHNOLOGY CEILING MOUNTED OCCUPANCY SENSOR.
c. EMERGENCY UL 924 AUTOMATIC LOAD RELAY
G. STORAGE ROOMS AND HOUSEKEEPING DEVICES:
a. **uWSXA PDT LV** DUAL TECHNOLOGY WALL MOUNTED OCCUPANCY SENSOR.
b. **uPP16 EFP PA** POWER/ RELAY PACK.
H. ALL EXTERIOR LIGHTING TO BE CONTROLLED VIA PHOTO-ELECTRIC CELL.
I. ALL INTERIOR CORRIDOR
J. ALL EXTERIOR LIGHT FIXTURE TRANSFER DEVICES TO BE BE CONNECTED TO LIFE SAFETY CIRCUIT H2E-5

KEYED NOTES:

1. EXISTING SITE POLE MOUNTED LIGHT FIXTURE TO REMAIN.
2. PROVIDE EMERGENCY BATTERY PACK WITH LED TROFFER AND EMERGENCY UL 924 AUTOMATIC LOAD RELAY.

JSRa
JOHNSON SMITTHIPONG & ROSAMOND ASSOCIATES, INC.
5210 E Williams Cir • Ste 600 • Tucson, AZ 85711
(520) 547-7904 • www.jsrarchinc.com

Consultants:

Bernhard TME Engineering

REGISTERED PROFESSIONAL ENGINEER 64509 JACOB S. CLARK 11/03/22 EXPIRES 09/30/24

WHITERIVER ADMINISTRATION OFFICE BUILDING

200 W HOSPITAL DR
WHITERIVER, AZ 85941

HHSI102201800007I

U. S. DEPARTMENT OF HEALTH AND HUMAN SERVICES
INDIAN HEALTH SERVICE
PHOENIX AREA OFFICE

No.	Date	Description

Issue Date:	11/3/2022
Project No:	21-020
Scale:	1/8" = 1'-0"
Drawn By:	RMW
Checked By:	JSC

FINAL CD

Sheet Title:
LIGHTING PLAN

Sheet Number:
E121

Autodesk Docs://21-020 Whiteriver Admin v2022/21-020 10 MEP WRMOB 2022.rvt
11/2/2022 10:06:09 AM

GENERAL NOTES:

A. ALL RECEPTACLES LOCATED IN BUSINESS OFFICES, CORRIDORS AND WAITING ROOM SHALL BE TAMPER- RESISTANT IN COMPLIANCE WITH 2017 NEC ARTICLE 406.12.
B. RECEPTACLES INDICATED WITHIN MODULAR FURNITURE ARE FURNISHED AND INSTALLED BY FURNITURE SYSTEMS CONTRACTOR INCLUDING COVERPLATES AND BASE WIRING HARNESS. ELECTRICAL CONTRACTOR SHALL TERMINATE BRANCH CIRCUIT CONDUCTORS TO WIRING HARNESS AT MODULAR FURNITURE BASE POWER ENTRANCE. REFER TO FURNITURE PLANS FOR MODULAR FURNITURE LAYOUT.
C. RECEPTACLE LOCATIONS WITHIN CONFERENCE ROOM 103 AND 104 SHALL COMPLY WITH 2017 NEC ARTICLES 210.71 AND 210.52(A)(1) THROUGH (A)(4).
D. ELECTRICAL CONTRACTOR SHALL VERIFY EXACT LOCATION OF ALL FLOOR BOXES WITH GENERAL CONTRACTOR AND FURNITURE CONTRACTOR PRIOR TO ROUGH-IN.

KEYED NOTES:

1. FURNITURE FEED FLUSH FLOOR BOX COMBINATION POWER AND DATA WITH LIQUIDTIGHT FLEXIBLE METALLIC CONDUIT BRANCH CIRCUIT CONNECTION TO MODULAR FURNITURE BASE POWER ENTRANCE. LEGRAND EVOLUTION SERIES EFBFF-OG, TWO GANG, COMPLETE WITH DIVIDER, CONCRETE LEVELING LEGS AND FURNITURE FEED COVER WITH (1)1" (POWER) AND (1)2" (TELE/DATA) SCREW PLUGS. COLOR AS SELETED BY ARCHITECT.
2. DUPLEX RECEPTACLE MOUNTED WITHIN MODULAR FURNITURE BELT LINE TILE, TYPICAL WITHIN MODULAR FURNITURE.
3. DUPLEX RECEPTACLE MOUNTED WITHIN MODULAR FURNITURE BASE, TYPICAL WITHIN MODULAR FURNITURE.
4. FLUSH FLOOR BOX COMBINATION POWER AND DATA, ONE DUPLEX RECEPTACLE AND ONE (2) PORT DATA OUTLET. LEGRAND EVOLUTION SERIES EFB6S-OG, SIX GANG, COMPLETE WITH DEVICE PLATES, CONCRETE LEVELING LEGS AND EFB6810BTC SURFACE STYLE COVER WITH SOILD LID. COLOR AS SELECTED BY ARCHITECT.
5. FLUSH FLOOR BOX, COMBINATION POWER AND DATA, TWO DUPLEX RECEPTACLES AND ONE (4) PORT DATA OUTLET. LEGRAND EVOLUTION SERIES EFB6S-OG, SIX GANG COMPLETE WITH DEVICE PLATES, CONCRETE LEVELING LEGS AND EFB6810BTC SURFACE STYLE COVER WITH SOLID LID. COLOR AS SELECTED BY ARCHITECT.
6. FLUSH FLOOR BOX, COMBINATION POWER AND DATA, TWO DUPLEX RECEPTACLES AND ONE (6) PORT DATA OUTLET. LEGRAND EVOLUTION SERIES EFB6S-OG, SIX GANG COMPLETE WITH DEVICE PLATE, CONCRETE LEVELING LEGS AND EFB6810BTC SURFACE STYLE COVER WITH SOLID LID. COLOR AS SELECTRD BY ARCHITECT.
7. AUTOMATIC DOOR OPERATOR.
8. AUTOMATIC DOOR PUSHPLATE PROVIDED BY DOOR CONTRACTOR, ELECTRICAL CONTRACTOR TO PROVIDE OUTLET BOX FOR PUSHPLATE AND 3/4"C WITH PULL WIRE FROM OUTLET BOX TO DOOR OPERATOR.
9. DUPLEX RECEPTACLE LOCATED FLUSH IN CEILING FOR CEILING MOUNTED PROJECTOR. COORDINATE EXACT LOCATION WITH VIDEO CONTRACTOR PRIOR TO ROUGHIN.
10. FLUSH FLOOR BOX, ONE DUPLEX RECEPTACLE. LEGRAND OMNIBOX 880S1 COMPLETE WITH DUPLEX RECEPTACLE FLIP LID COVERPLATE. COLOR AS SELECTED BY ARCHITECT.
11. PEDESTAL MOUNTED AUTO DOOR PUSHPLATE. VERIFY EXACT LOCATION PRIOR TO ROUGH-IN. CARD READER TO BE MOUNTED IN SAME PEDESTAL.
12. JUNCTION BOX FOR 120V POWER SUPPLY FOR DOOR HARDWARE.
13. JUNCTION BOX FOR 120V TRANSFORMERS FOR INFRARED SENSORS ON URINAL.
14. GFCI RECEPTACLE FOR 120V TRANSFORMER FOR INFRARED SENSORS ON SINK(S).
15. JUNCTION BOX FOR 120V TO AED.
16. JUNCTION BOX FPR PROJECTION SCREEN. VERIFY EXACT LOCATION WITH AV CONTRACTOR PRIOR TO ROUGH-IN. TYPICAL FOR CONFERENCE AND TRAINING ROOMS.
17. JUNCTION BOX FOR PROJECTION RAISE/LOWER CONTROL SWITCH. PROVIDE OUTLET BOX WITH (1) 3/4"C WITH PULL WIRE TO PROJECTION SCREEN JUNCTION BOX. CONTROL SWITCH AND CABLING PROVIDED BY AV CONTRACTOR. TYPICAL FOR CONFERENCE AND TRAINING ROOMS.

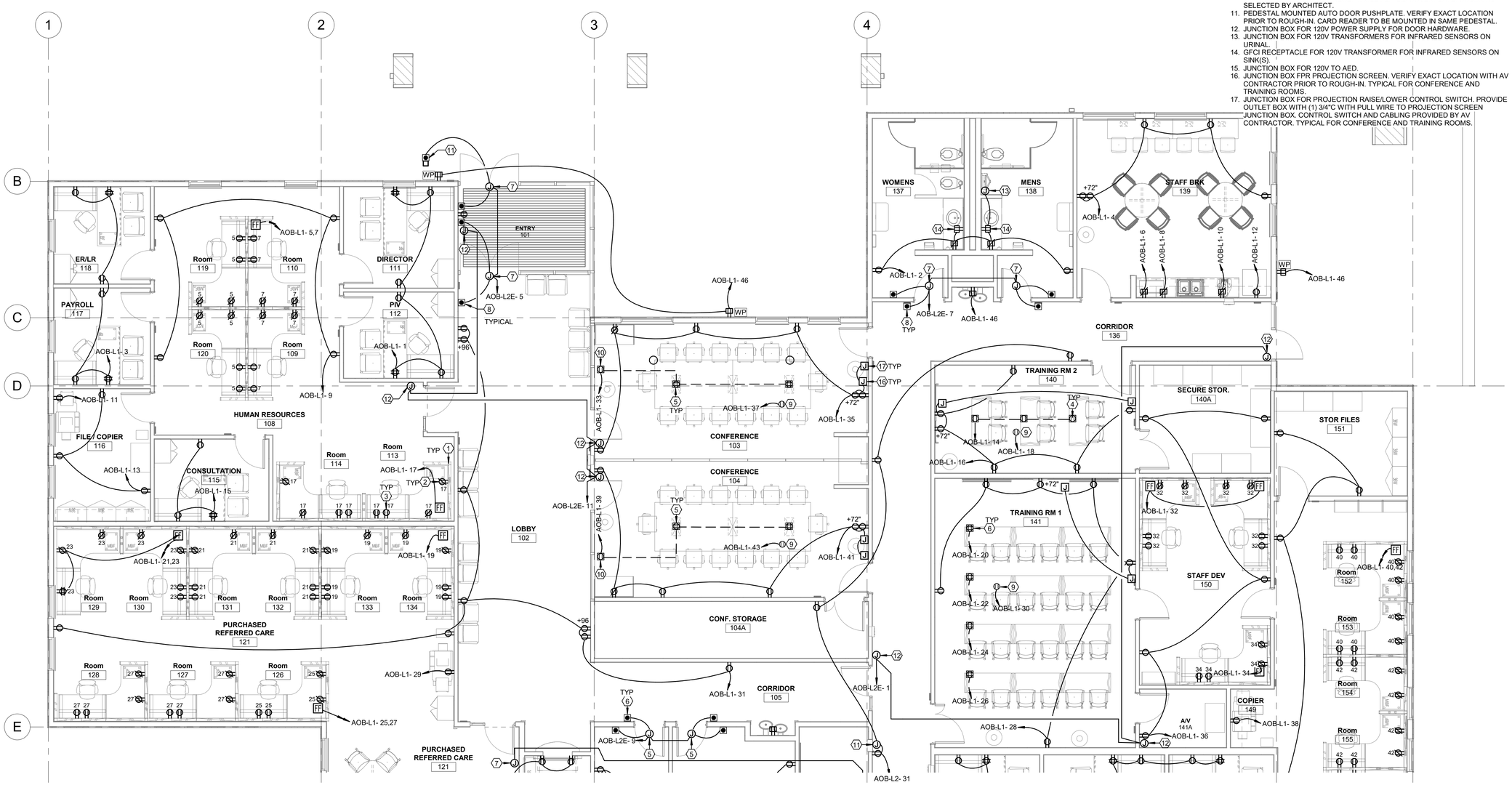

A1 POWER PLAN - NORTH
3/16" = 1'-0"

JOHNSON SMITTHIPONG & ROSAMOND ASSOCIATES, INC.
5210 E Williams Cir • Ste 600 • Tucson, AZ 85711
(520) 547-7904 • www.jsrarchinc.com

Consultants:

Bernhard TME Engineering

JACOB S. CLARK 64509 11/03/22 EXPIRES 09/30/24

WHITERIVER ADMINISTRATION OFFICE BUILDING

200 W HOSPITAL DR
WHITERIVER, AZ 85941

HHSI102201800007I

U. S. DEPARTMENT OF HEALTH AND HUMAN SERVICES
INDIAN HEALTH SERVICE
PHOENIX AREA OFFICE

No.	Date	Description

Issue Date:	11/3/2022
Project No:	21-020
Scale:	3/16" = 1'-0"
Drawn By:	RMW
Checked By:	JSC

FINAL CD

Sheet Title:

POWER PLAN - NORTH

Sheet Number:

E131

Autodesk Docs://21-020 Whiteriver Admin v2022/21-020 10 MEP WRMOB 2022.rvt
11/2/2022 10:06:13 AM

GENERAL NOTES:

A. ALL RECEPTACLES LOCATED IN BUSINESS OFFICES, CORRIDORS AND WAITING ROOM SHALL BE TAMPER- RESISTANT IN COMPLIANCE WITH 2017 NEC ARTICLE 406.12.
B. RECEPTACLES INDICATED WITHIN MODULAR FURNITURE ARE FURNISHED AND INSTALLED BY FURNITURE SYSTEMS CONTRACTOR INCLUDING COVERPLATES AND BASE WIRING HARNESS. ELECTRICAL CONTRACTOR SHALL TERMINATE BRANCH CIRCUIT CONDUCTORS TO WIRING HARNESS AT MODULAR FURNITURE BASE POWER ENTRANCE. REFER TO FURNITURE PLANS FOR MODULAR FURNITURE LAYOUT.
C. RECEPTACLE LOCATIONS WITHIN CONFERENCE ROOM 103 AND 104 SHALL COMPLY WITH 2017 NEC ARTICLES 210.71 AND 210.52(A)(1) THROUGH (A)(4).
D. ELECTRICAL CONTRACTOR SHALL VERIFY EXACT LOCATION OF ALL FLOOR BOXES WITH GENERAL CONTRACTOR AND FURNITURE CONTRACTOR PRIOR TO ROUGH-IN.

KEYED NOTES:

1. FURNITURE FEED FLUSH FLOOR BOX COMBINATION POWER AND DATA WITH LIQUIDTIGHT FLEXIBLE METALLIC CONDUIT BRANCH CIRCUIT CONNECTION TO MODULAR FURNITURE BASE POWER ENTRANCE. LEGRAND EVOLUTION SERIES EFBFF-OG, TWO GANG, COMPLETE WITH DIVIDER, CONCRETE LEVELING LEGS AND FURNITURE FEED COVER WITH (1)1" (POWER) AND (1)2" (TELE/DATA) SCREW PLUGS. COLOR AS SELETED BY ARCHITECT.
2. DUPLEX RECEPTACLE MOUNTED WITHIN MODULAR FURNITURE BELT LINE TILE, TYPICAL WITHIN MODULAR FURNITURE.
3. DUPLEX RECEPTACLE MOUNTED WITHIN MODULAR FURNITURE BASE, TYPICAL WITHIN MODULAR FURNITURE.
4. FLUSH FLOOR BOX, COMBINATION POWER AND DATA, TWO DUPLEX RECEPTACLES AND ONE (4) PORT DATA OUTLET. LEGRAND EVOLUTION SERIES EFB6S-OG, SIX GANG COMPLETE WITH DEVICE PLATES, CONCRETE LEVELING LEGS AND EFB6810BTC SURFACE STYLE COVER WITH SOLID LID. COLOR AS SELECTED BY ARCHITECT.
5. AUTOMATIC DOOR OPERATOR.
6. AUTOMATIC DOOR PUSHPLATE PROVIDED BY DOOR CONTRACTOR, ELECTRICAL CONTRACTOR TO PROVIDE OUTLET BOX FOR PUSHPLATE AND 3/4"C WITH PULL WIRE FROM OUTLET BOX TO DOOR OPERATOR.
7. JUNCTION BOX FOR 120V POWER SUPPLY FOR DOOR HARDWARE.
8. JUNCTION BOX FOR 120V TRANSFORMERS FOR INFRARED SENSORS ON URINAL.
9. GFCI RECEPTACLE FOR 120V TRANSFORMERS FOR INFRARED SENSORS ON SINKS.
10. JUNCTION BOX AND GFI RECEPTACLE LOCATED WITHIN BACKFLOW PREVENTION HOT BOX. VERIFY LOCATION PRIOR TO ROUGH-IN.
11. JUNCTION BOX FOR 120V TO AED.

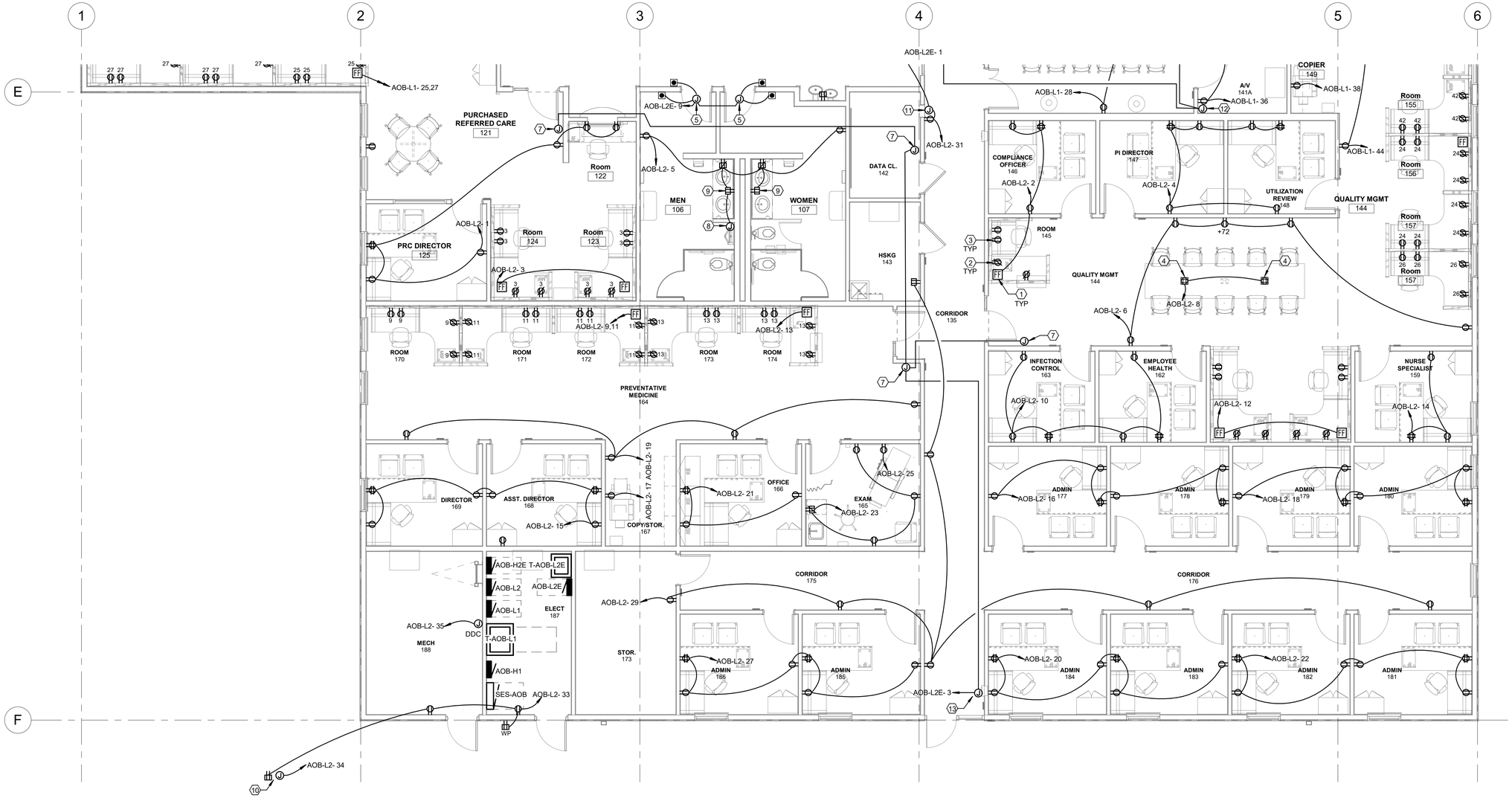

A1 POWER PLAN - SOUTH
3/16" = 1'-0"

JSRa
JOHNSON SMITTHIPONG & ROSAMOND ASSOCIATES, INC.
5210 E Williams Cir • Ste 600 • Tucson, AZ 85711
(520) 547-7904 • www.jsrarchinc.com

Consultants:

Bernhard TME Engineering

64509 JACOB S. CLARK 11/03/22 EXPIRES 09/30/24

WHITERIVER ADMINISTRATION OFFICE BUILDING

200 W HOSPITAL DR
WHITERIVER, AZ 85941

HHSI102201800007I

U. S. DEPARTMENT OF HEALTH AND HUMAN SERVICES
INDIAN HEALTH SERVICE
PHOENIX AREA OFFICE

No.	Date	Description

Issue Date:	11/3/2022
Project No:	21-020
Scale:	3/16" = 1'-0"
Drawn By:	Author
Checked By:	Checker

FINAL CD

Sheet Title:

POWER PLAN - SOUTH

Sheet Number:

E132

Autodesk Docs://21-020 Whiteriver Admin v2022/21-020 10 MEP WRMOB 2022.rvt
11/2/2022 10:06:16 AM

A1 MECHANICAL POWER PLAN
1/8" = 1'-0"

JSRa
JOHNSON SMITTHIPONG & ROSAMOND ASSOCIATES, INC.
5210 E Williams Cir • Ste 600 • Tucson, AZ 85711
(520) 547-7904 • www.jsrarchinc.com

Consultants:

Bernhard TME Engineering

REGISTERED PROFESSIONAL ENGINEER 64509 JACOB S. CLARK 11/03/22 EXPIRES 09/30/24

WHITERIVER ADMINISTRATION OFFICE BUILDING

200 W HOSPITAL DR
WHITERIVER, AZ 85941

HHSI102201800007I

U. S. DEPARTMENT OF HEALTH AND HUMAN SERVICES
INDIAN HEALTH SERVICE
PHOENIX AREA OFFICE

No.	Date	Description

Issue Date:	11/3/2022
Project No:	21-020
Scale:	1/8" = 1'-0"
Drawn By:	RMW
Checked By:	JSC

FINAL CD

Sheet Title:

MECHANICAL POWER PLAN

Sheet Number:

E141

Autodesk Docs://21-020 Whiteriver Admin v2022/21-020 10 MEP WRMOB 2022.rvt
11/2/2022 10:06:20 AM

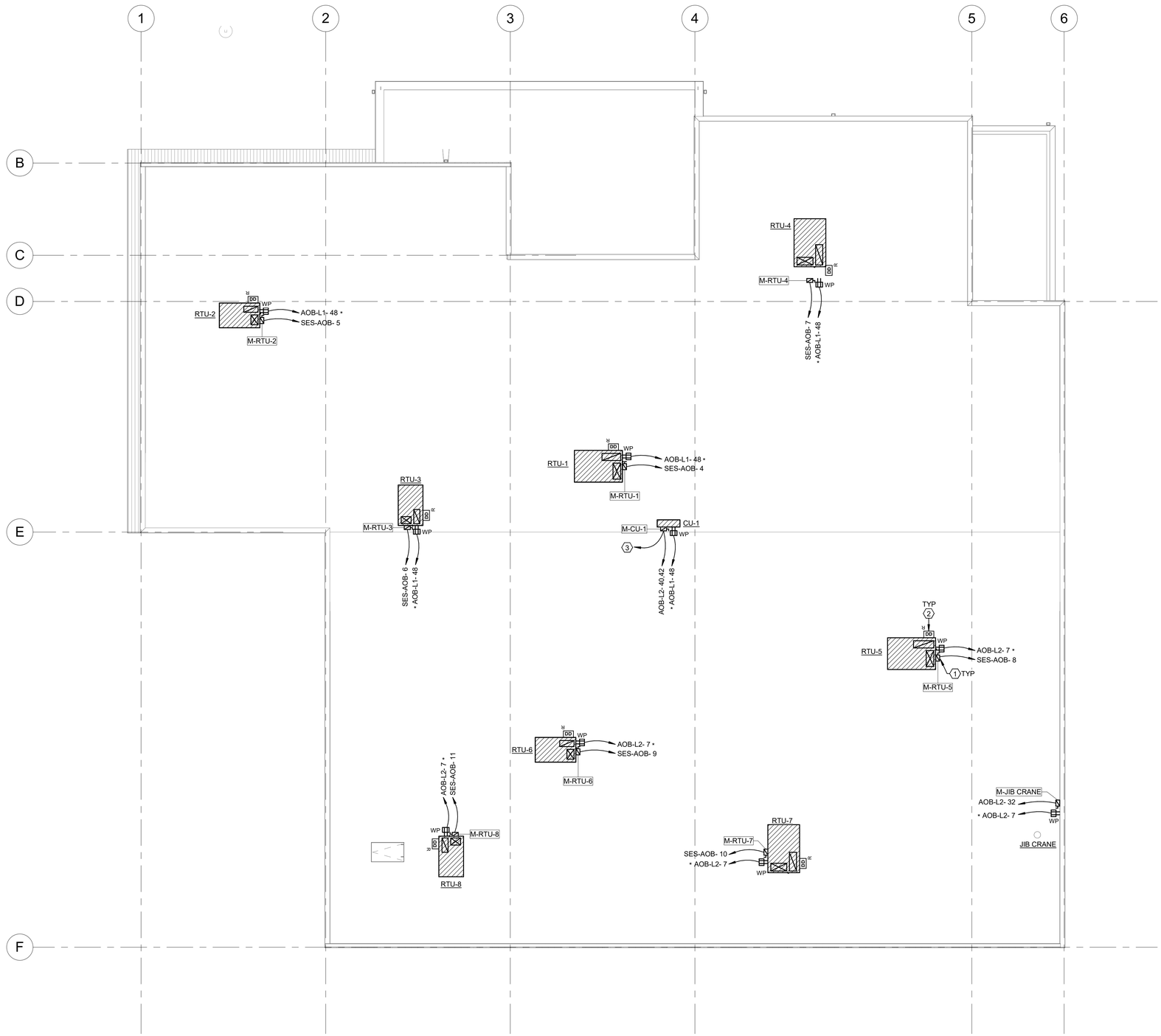

KEYED NOTES:

1. STANCHION MOUNT DISCONNECT SWITCH AND GFCI RECEPTACLE ADJACENT TO RTU.
2. DUCT MOUNTED SMOKE DETECTOR LOCATED WITH RETURN DUCT WORK BELOW WITHIN ACCESSIBLE CEILING SPACE.
3. OUTDOOR CONDENSING UNIT CU-1 FEEDS INDOOR AHU-1.

A2 ROOF POWER PLAN
1/8" = 1'-0"

JSRa
JOHNSON SMITTHIPONG & ROSAMOND ASSOCIATES, INC.
5210 E Williams Cir • Ste 600 • Tucson, AZ 85711
(520) 547-7904 • www.jsrarchinc.com

Consultants:

Bernhard TME Engineering

REGISTERED PROFESSIONAL ENGINEER 64509 JACOB S. CLARK 11/03/22 EXPIRES 09/30/24

WHITERIVER ADMINISTRATION OFFICE BUILDING

200 W HOSPITAL DR
WHITERIVER, AZ 85941

HHSI102201800007I

U. S. DEPARTMENT OF HEALTH AND HUMAN SERVICES
INDIAN HEALTH SERVICE
PHOENIX AREA OFFICE

No.	Date	Description

Issue Date:	11/3/2022
Project No:	21-020
Scale:	1/8" = 1'-0"
Drawn By:	RMW
Checked By:	JSC

FINAL CD

Sheet Title:

ROOF POWER PLAN

Sheet Number:

E142

Autodesk Docs://21-020 Whiteriver Admin v2022/21-020 10 MEP WRMOB 2022.rvt
11/2/2022 10:06:21 AM

A1 FIRE ALARM PLAN
1/8" = 1'-0"

JSRa
JOHNSON SMITTHIPONG & ROSAMOND ASSOCIATES, INC.
5210 E Williams Cir • Ste 600 • Tucson, AZ 85711
(520) 547-7904 • www.jsrarchinc.com

Consultants:

Bernhard TME Engineering

REGISTERED PROFESSIONAL ENGINEER 64509 JACOB S. CLARK 11/03/22 EXPIRES 09/30/24

WHITERIVER ADMINISTRATION OFFICE BUILDING

200 W HOSPITAL DR
WHITERIVER, AZ 85941

HHSI102201800007I

U. S. DEPARTMENT OF HEALTH AND HUMAN SERVICES
INDIAN HEALTH SERVICE
PHOENIX AREA OFFICE

No.	Date	Description

Issue Date:	11/3/2022
Project No:	21-020
Scale:	1/8" = 1'-0"
Drawn By:	RMW
Checked By:	JSC

FINAL CD

Sheet Title:

FIRE ALARM PLAN

Sheet Number:

E151

Autodesk Docs://21-020 Whiteriver Admin v2022/21-020 10 MEP WRMOB 2022.rvt
11/2/2022 10:06:24 AM

A1 SYSTEMS PLAN
1/8" = 1'-0"

GENERAL NOTES:

A. ALL TELE/DATA, WIRELESS ACCESS POINT (WAP), PUBLIC ADDRESS SYSTEM, CATV LOW VOLTAGE SYSTEMS SHALL UTILIZE CATEGORY 6A SHIELDED TWISTED PAIR (STP) PLENUM RATED COPPER CABLING.
B. CAT6A STP INSULATION COLORS:
- DATA: BLUE.
- SECURITY I.E. CARD ACCESS: WHITE
- WIRELESS ACCESS POINTS: GREEN
- PAGING: YELLOW
- ANALOG: ORANGE

C. ALL VOIP TELE/DATA OUTLETS TO HAVE (2) PORTS AND (2) CAT6A CABLES UNLESS NOTED OTHERWISE.
D. ALL LOW VOLTAGE SYSTEMS INCLUDING FIBER OPTIC CABLING, FIRE ALARM/MASS NOTIFICATION, VOIP PAGING, VOIP TELE/DATA, VOIP WIRELESS ACCESS POINT, ACCESS CONTROL INCLUDING ALL DOOR HARDWARE COMPONENTS TO BE FURNISHED AND INSTALLED BY CONTRACTOR. EACH LOW VOLTAGE SYSTEM TO BE COMPLETE WITH ALL REQUIRED COMPONENTS, CONDUCTORS/CABLING, 120V BRANCH CIRCUITS REQUIRED, CONDUITS, ALL TERMINATIONS, CABLING TESTED AND SYSTEMS CERTIFIED.
E. ACCESS SYSTEM SHALL BE HONEYWELL WIN-PAK IN COMPLIANCE WITH CURRENT FIPS-201 PERSONAL IDENTITY VERIFICATION FEDERAL REQUIREMENTS.
F. FIRE ALARM SYSTEM/MASS NOTIFICATION SYSTEM TO BE NOTIFIER BY HONEYWELL AS THE WHITERIVER INDIAN HOSPITAL CAMPUS PROPRIETARY FIRE ALARM SYSTEM AND VENDOR. CONTACT LVC COMPANIES, JOHN CARRIER PROJECT SUPERVISOR, WORK PHONE (480) 967-0800.
G. ACCESS CONTROL/DOOR ELECTRONIC HARDWARE TO BE A WHITERIVER INDAIN HOSPITAL CAMPUS PROPRIETARY SYSTEM HONEYWELL PRO-WATCH. CONTACT ELECTRONIC SECURITY CONCEPTS, JOE MENKE, PRESIDENT, WORK PHONE (480) 947-6032.
H. VOIP TELE/DATA SWITCH FURNISHED BY WHITERIVER SERVICE UNIT. CONTRACTOR TO INSTALL, TEST AND TERMINATE.
I. VOIP TELE/DATA UPS SYSTEM FURNISHED AND INSTALLED BY WHITERIVER SERVICE UNIT.
J. PROVIDE (1)2" LIQUIDTIGHT FLEXIBLE METALLIC CONDUIT FROM EACH FIXED FURNITURE FLOOR BOX TO MODULAR FURNITURE BASE FOR TELE/DATA CABLING.
K. PROVIDE (1)2"C FROM EACH FIXED FURNITURE FLOOR BOX TO BASKET CABLE TRAY WITHIN ACCESSIBLE CEILING. CONDUIT TO TERMINATE AT CABLE TRAY WITH NYLON BUSHING.

KEYED NOTES:

1. FLUSH FLOOR BOX, COMBINATION POWER AND DATA. PROVIDED DATA CABLING WITHIN LIQUIDTIGHT FLEXIBLE METALLIC CONDUIT TO MODULAR FURNITURE BASE DATA ENTRY POINT. PROVIDE (1) 2" CONDUIT FROM FLOOR BOX UNDERGROUND TO DATA CLOSET 142.
2. ONE PORT CAT6A SHIELDED TWISTED PAIR (STP) OUTLET LOCATED WITHIN MODULAR FURNITURE BASE. ELECTRICAL CONTRACTOR TO PROVIDE DATA PORTS, CAT6A CABLING, AND TWO PORT DATA COVERPLATE.
3. TWO PORT CAT6A SHIELDED TWISTED PAIR (STP) OUTLET LOCATED WITH WALL. ELECTRICAL CONTRACTOR TO PROVIDE DATA PORTS, TWO PORT COVERPLATE, CAT6A CABLING IN 1"C TO BASKET CABLE TRAY LOCATED WITHIN ACCESSIBLE CEILING. CAT6A CABLING TO BE ROUTED THROUGH BASKET CABLE TRAY TO PATCH PANEL MOUNTED IN CABLE MANAGEMENT RACK IN DATA CLOSET 142.
4. FLUSH FLOOR BOX COMBINATION POWER AND DATA, ONE DUPLEX RECEPTACLE AND ONE (2) PORT DATA OUTLET.
5. FLUSH FLOOR BOX, COMBINATION POWER AND DATA, TWO DUPLEX RECEPTACLES AND ONE (4) PORT DATA OUTLET.
6. FLUSH FLOOR BOX, COMBINATION POWER AND DATA, TWO DUPLEX RECEPTACLES AND ONE (6) PORT DATA OUTLET.
7. 12" X 4" BASKET CABLE TRAY LOCATED WITHIN ACCESSIBLE CEILING SPACE.
8. PROVIDE VOIP LAY-IN CEILING SPEAKER PROVIDE CAT6A SHIELDED TWISTED PAIR (STP) FROM AMPLIFIER WITHIN CABLE MANAGEMENT RACK WITHIN DATA CLOSET 142 TO TERMINATION BOX LOCATED ADJACENT TO EACH VOIP SPEAKER. TERMINATION BOXES TO HAVE (1) RJ-45 FEMALE PORT LOCATED WITHIN ACCESSIBLE CEILING SPACE.
9. PROVIDE VOIP RECESSED CEILING SPEAKER. PROVIDE CAT6A SHIELDED TWISTED PAIR (STP) FROM AMPLIFIER WITHIN CABLE MANAGEMENT RACK WITHIN DATA CLOSET 142 TO VOIP SPEAKER.
10. PROVIDE VOIP WALL MOUNTED PAGING HORN. PROVIDE CAT6A SHIELDED TWISTED PAIR (STP) FROM CABLE MANAGEMENT RACK WITHIN DATA CLOSET 142 TO VOIP HORN.
11. PROVIDE VOIP WIRELESS ACCESS POINT. ELECTRICAL CONTRACTOR TO PROVIDE CAT6A SHIELDED TWISTED PAIR (STP) FROM CABLE MANAGEMENT RACK WITHIN DATA CLOSET 142 TO TERMINATION BOX LOCATED ADJACENT TO EACH VOIP WIRELESS ACCESS POINT. TERMINATION BOXES TO HAVE (1) RJ-45 FEMALE PORT LOCATED WITHIN ACCESSIBLE CEILING SPACE.
12. PROVIDE VOIP DATA PORT LOCATED FLUSH IN CEILING FOR CEILING MOUNTED PROJECTOR.
13. PROVIDE (1) 1"C WITH PULL WIRE FROM CARD READER TO BASKET CABLE TRAY WITHIN ACCESSIBLE CEILING SPACE. CONDUIT TO TERMINATE AT CABLE TRAY WITH NYLON BUSHING.
14. PROVIDE (1) 1"C WITH PULL WIRE FROM HEAD OF DOOR FRAME TO BASKET CABLE TRAY FOR DOOR CONTACT SWITCH, ELECTRONIC DOOR STRIKE AND IR SENSOR. CONDUIT TO TERMINATE AT CABLE TRAY WITH NYLON BUSHING.
15. 120V POWER SUPPLY LOCATED WITHIN ACCESSIBLE CEILING SPACE FOR DOOR HARDWARE. INTERFACE WITH ACCESS CONTROL PANEL AND FIRE ALARM SYSTEM.
16. 120V POWER SUPPLY SURFACE MOUNTED ON WALL FOR DOOR HARDWARE. INTERFACE WITH ACCESS CONTROL PANEL AND FIRE ALARM SYSTEM.
17. FLUSH MOUNTED JUNCTION BOX WITHIN SHEETROCK CANOPY CEILING FOR CCTV DOMED CAMERA PROVIDED BY OWNER. PROVIDE BLANK STAINLESS STEEL COVERPLATE ON JUNCTION BOX. PROVIDE (1) 1"C WITH PULL WIRE FROM OUTLET BOX TO BASKET CABLE TRAY. CONDUIT TO TERMINATE AT CABLE TRAY WITH NYLON BUSHING.
18. FLUSH MOUNTED JUNCTION BOX IN WALL FOR CCTV CAMERA, CAMERA BY OWNER. PROVIDE BLANK STAINLESS STEEL COVERPLATE ON JUNCTION BOX. PROVIDE (1) 1"C WITH PULL WIRE FROM OUTLET BOX TO BASKET CABLE TRAY. CONDUIT TO TERMINATE AT CABLE TRAY WITH NYLON BUSHING.
19. PEDESTAL MOUNTED CARD READER. PROVIDE (1) 1"C WITH PULL WIRE FROM PEDESTAL TO BASKET CABLE TRAY. CONDUIT TO TERMINATE AT CABLE TRAY WITH NYLON BUSHING. VERIFY EXACT LOCATION OF PEDESTAL PRIOR TO ROUGH-IN. PUSHPLATE FOR AUTO DOOR TO BE MOUNTED IN SAME PEDESTAL.
20. DOOR CONTACT ON ROOF ACCESS HATCH. PROVIDE (1) 1"C WITH PULL WIRE FROM OUTLET BOX TO BASKET CABLE TRAY. CONDUIT TO TERMINATE AT CABLE TRAY WITH NYLON BUSHING.
21. JUNCTION BOX LOCATED WITHIN ACCESSIBLE CEILING SPACE FOR AV CABLING. CABLING PROVIDED BY AV CONTRACTOR.
22. FLUSH MOUNTED WALL JUNCTION BOX FOR AV CABLING. CABLING PROVIDED BY AV CONTRACTOR.
23. (1) 2"C WITH PULL WIRE FOR AV CABLING.

JSRa
JOHNSON SMITTHIPONG & ROSAMOND ASSOCIATES, INC.
5210 E Williams Cir • Ste 600 • Tucson, AZ 85711
(520) 547-7904 • www.jsrarchinc.com

Consultants:

Bernhard TME Engineering

64509 JACOB S. CLARK 11/03/22 EXPIRES 09/30/24

WHITERIVER ADMINISTRATION OFFICE BUILDING

200 W HOSPITAL DR
WHITERIVER, AZ 85941

HHSI102201800007I

U. S. DEPARTMENT OF HEALTH AND HUMAN SERVICES
INDIAN HEALTH SERVICE
PHOENIX AREA OFFICE

No.	Date	Description

Issue Date:	11/3/2022
Project No:	21-020
Scale:	1/8" = 1'-0"
Drawn By:	RMW
Checked By:	JSC

FINAL CD

Sheet Title:

SYSTEMS PLAN

Sheet Number:

E161

Autodesk Docs://21-020 Whiteriver Admin v2022/21-020 10 MEP WRMOB 2022.rvt
11/2/2022 10:06:28 AM

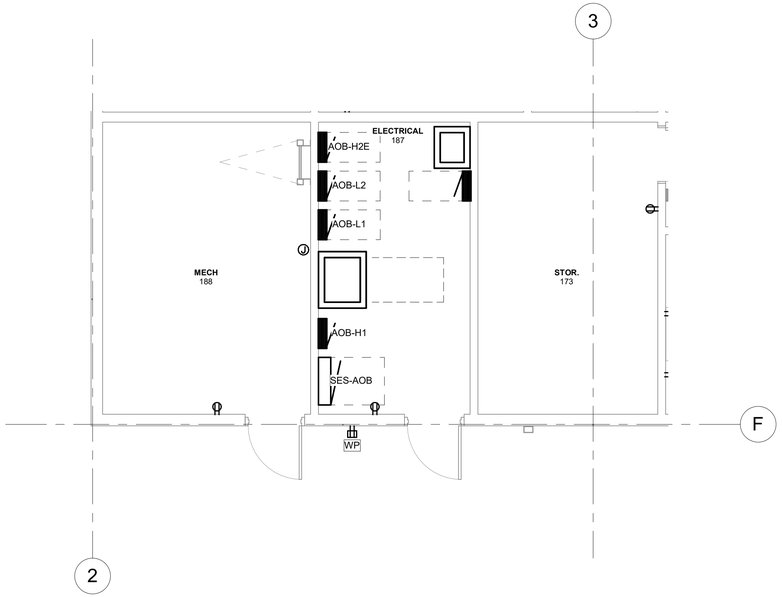

C1 POWER PLAN MECH. 188 AND ELEC. 187
1/4" = 1'-0"

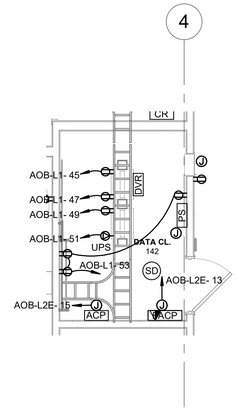

C4 POWER PLAN DATA CL. 142
1/4" = 1'-0"

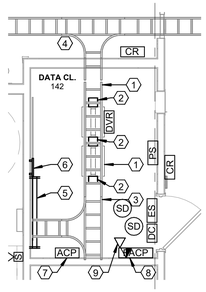

B4 SYSTEMS PLAN DATA CL. 142
1/4" = 1'-0"

KEYED NOTES:

1. 20" WIDE CABLE MANAGEMENT RACK
2. VERTICAL CABLE MANAGER.
3. 12" WIDE UNIVERSAL CABLE RUNWAY.
4. 12" WIDE X 4" DEEP BASKET CABLE TRAY.
5. 4' X 8' X 3/4" FIRE RESISTANT PLYWOOD TERMINAL BOARD.
6. 12" TGB GROUNDING BUS BAR, 12"W X 1/4"H X 12"L, COPPER. PROVIDE 1-#4/0 COPPER, INSULATED, 1"C TO GROUND BUS WITHIN 'SES-MOB'.
7. PROVIDE CAMPUS PROPRIETARY ACCESS CONTROL PANEL. HONEYWELL PRO 4200 ACCESS CONTROL PANEL. CONTACT JOE MENKE AT ELECTRONIC SECURITY CONCEPTS, (480) 947-6032.
8. PROVIDE CAMPUS PROPRIETARY NOTIFIER BY HONEYWELL FIRE ALARM AND MASS NOTIFICATION SYSTEM. CONTACT JOHN CARRIER AT LVC COM PANELS, (480) 967-0800.
9. PROVIDE (2) ANALOG DATA CAT6A STP TO FIRE ALARM CONTROL PANEL.

JSRa
JOHNSON SMITTHIPONG & ROSAMOND ASSOCIATES, INC.
5210 E Williams Cir • Ste 600 • Tucson, AZ 85711
(520) 547-7904 • www.jsrarchinc.com

Consultants:

Bernhard TME Engineering

REGISTERED PROFESSIONAL ENGINEER 64509 JACOB S. CLARK 11/03/22 Expires 09/30/24

WHITERIVER ADMINISTRATION OFFICE BUILDING

200 W HOSPITAL DR
WHITERIVER, AZ 85941

HHSI102201800007I

U. S. DEPARTMENT OF HEALTH AND HUMAN SERVICES
INDIAN HEALTH SERVICE
PHOENIX AREA OFFICE

No.	Date	Description

Issue Date:	11/3/2022
Project No:	21-020
Scale:	1/4" = 1'-0"
Drawn By:	RMW
Checked By:	JSC

FINAL CD

Sheet Title:

ENLARGED PLANS

Sheet Number:

E401

Autodesk Docs://21-020 Whiteriver Admin v2022/21-020 10 MEP WRMOB 2022.rvt
11/2/2022 10:06:30 AM

EXISTING DISTRIBUTION PANEL

Switchboard: MDP

Location: SITE
Supply From: NAVOPACHE TRANSFORMER
Mounting: FLOOR
Enclosure: NEMA 1

Volts: 480/277 Wye
Phases: 3
Wires: 4

A.I.C. Rating: 35,000
Mains Type: MCB
Mains Rating: 800 A
MCB Rating: 800 A

Notes:
EXISTING EATON POW-R-LINE

CKT	Circuit Description	# of Poles	Frame Size	Trip Rating	Load	Remarks
1	INCOMING GENERATOR MAIN	3	800 A	800 A	0 VA	
2	INCOMING UTILITY MAIN	3	800 A	800 A	0 VA	
3	ADMINISTRATION OFFICE BUILDING SES-MOB	3	600 A	400 A	192337 VA	L630H
4	TRANSFORMER TBA / PANEL LBA AND PANEL LIA	3	225 A	225 A	111400 VA	FD35K
5	RELOCATED QM TRAILER	2	125 A	125 A	45500 VA	NEV* MATCHING FD35K BREAKER
6	SPACE - PROVISIONS	3	100 A	0 A	0 VA	FD35K
7	AUTOMATIC TRANSFER SWITCH ATS-E	3	40 A	40 A	3400 VA	FD35K
8	PANEL HIA	3	200 A	200 A	124400 VA	FD35K
9	PANEL HBA	3	200 A	200 A	138900 VA	FD35K
10	SPACE - PROVISIONS	3	100 A	0 A	0 VA	FD35K
11	ROOFTOP UNIT RTU-1	3	100 A	0 A	62250 VA	FD3*K
12						
13						
14						
15						
				Total Conn. Load:	678187 VA	
				Total Amps:	816 A	

Legend:

Load Classification	Connected Load	Demand Factor	Estimated Demand	Panel Totals	
POWER, OTHER	111075 VA	100.00%	111075 VA		
				Total Conn. Load:	678187 VA
				Total Est. Demand:	678187 VA
				Total Conn. Current:	816 A
				Total Est. Demand Current:	816 A

Notes:
* ESTIMATED LOAD.

EXISTING PANELBOARD

Branch Panel: H1E

Location: SSB 1ST FLOOR ELECT RM FM115
Supply From: ATS-E
Mounting: SURFACE
Enclosure: NEMA 1

Volts: 480/277 Wye
Phases: 3
Wires: 4

A.I.C. Rating: 10,000
Bus Rating: 100 A
MCB Rating: 100 A

Notes: EXISTING EMERGENCY PANEL
*PROVIDE NEW MATCHING CIRCUIT BREAKER

CKT	Circuit Description	Trip (A)	Poles	"A" PHASE (VA)		"B" PHASE (VA)		"C" PHASE (VA)		Poles	Trip (A)	Circuit Description	CKT
1	LTS	20	1	1340	1236					3	30	PANEL AOB-H2E*	2
3	LTS	20	1			660	177			--	--	--	4
5	LTS	20	1					740	0	--	--	--	6
7	SPARE	20	1	0	--					1	--	SPACE	8
9	SPARE	20	1			0	--			1	--	SPACE	10
11	SPARE	20	1					0	--	1	--	SPACE	12
			Total Load:	2576 VA		837 VA		740 VA					
			Total Amps:	9 A		3 A		3 A					

Load Classification	Connected Load	Demand Factor	Estimated Demand	Panel Totals	
				Total Conn. Load:	4153 VA
				Total Est. Demand:	4153 VA
				Total Conn. Current:	5 A
				Total Est. Demand Current:	5 A

NEW PANELBOARD

Branch Panel: AOB-H2E

Location: ELEC 187
Supply From: EXISTING PANEL H1E
Mounting: SURFACE
Enclosure: NEMA 1

Volts: 480/277 Wye
Phases: 3
Wires: 4

A.I.C. Rating: 18,000
Bus Rating: 125 A
MCB Rating: 30A

Notes:
SQUARE D NQ OR APPROVED EQUAL

CKT	Circuit Description	Trip (A)	Poles	"A" PHASE (VA)		"B" PHASE (VA)		"C" PHASE (VA)		Poles	Trip (A)	Circuit Description	CKT
1	LTS- MOB INTERIOR CORRIDOR	20	1	1236	0					3	30	INCOMING MAIN (BRANCH MOUNTED)	2
3	LTS- MOB INTERIOR	20	1			177	0			--	--	--	4
5	LTS- MOB EXTERIOR	20	1					0	0	--	--	--	6
7	SPACE	--	1	--	--					1	--	SPACE	8
9	SPACE	--	1			--	--			1	--	SPACE	10
11	SPACE	--	1					--	--	1	--	SPACE	12
13	SPACE	--	1	--	1986					3	30	TRANSFORMER T-AOB-L2E	14
15	SPACE	--	1			--	2616			--	--	--	16
17	SPACE	--	1					--	2256	--	--	--	18
			Total Load:	3222 VA		2793 VA		2256 VA					
			Total Amps:	12 A		10 A		8 A					

Load Classification	Connected Load	Demand Factor	Estimated Demand	Panel Totals	
POWER, OTHER	6858 VA	100.00%	6858 VA		
				Total Conn. Load:	8271 VA
				Total Est. Demand:	8271 VA
				Total Conn. Current:	10 A
				Total Est. Demand Current:	10 A

NEW PANELBOARD

Branch Panel: AOB-L2E

Location: ELEC 187
Supply From: T-AOB-L2E
Mounting: SURFACE
Enclosure: NEMA 1

Volts: 120/208 Wye
Phases: 3
Wires: 4

A.I.C. Rating: 100
Bus Rating: 100 A
MCB Rating: 60 A

Notes:

CKT	Circuit Description	Trip (A)	Poles	"A" PHASE (VA)		"B" PHASE (VA)		"C" PHASE (VA)		Poles	Trip (A)	Circuit Description	CKT
1	PWR- DOORS CORRIDOR 136	20	1	150	--					1	--	SPACE	2
3	PWR- DOORS CORRIDOR 135	20	1			780	--			1	--	SPACE	4
5	PWR- DOORS ENTRY 101	20	1					1656	--	1	--	SPACE	6
7	PWR- DOORS MEN 138, WOMENS 137	20	1	1656	--					1	--	SPACE	8
9	PWR- DOORS MEN 106, WOMEN 107	20	1			1656	--			1	--	SPACE	10
11	PWR- DOORS LOBBY 102	20	1					600	--	1	--	SPACE	12
13	PWR- FACP	20	1	180	--					1	--	SPACE	14
15	PWR- ACCESS CONTROL PANEL	20	1			180	--			1	--	SPACE	16
17	SPARE	20	1					0	--	1	--	SPACE	18
19	SPARE	20	1	0	--					1	--	SPACE	20
21	SPARE	20	1			0	--			1	--	SPACE	22
23	SPARE	20	1					0	--	1	--	SPACE	24
25	SPARE	20	1	0	--					1	--	SPACE	26
27	SPARE	20	1			0	--			1	--	SPACE	28
29	SPARE	20	1					0	--	1	--	SPACE	30
			Total Load:	1986 VA		2616 VA		2256 VA					
			Total Amps:	17 A		22 A		19 A					

Load Classification	Connected Load	Demand Factor	Estimated Demand	Panel Totals	
POWER, OTHER	6858 VA	100.00%	6858 VA		
				Total Conn. Load:	6858 VA
				Total Est. Demand:	6858 VA
				Total Conn. Current:	19 A
				Total Est. Demand Current:	19 A

JSRa
JOHNSON SMITTHIPONG & ROSAMOND ASSOCIATES, INC.
5210 E Williams Cir • Ste 600 • Tucson, AZ 85711
(520) 547-7904 • www.jsrarchinc.com

Consultants:

Bernhard TME Engineering

REGISTERED PROFESSIONAL ENGINEER 64509 JACOB S. CLARK 11/03/22 EXPIRES 09/30/24

WHITERIVER ADMINISTRATION OFFICE BUILDING

200 W HOSPITAL DR
WHITERIVER, AZ 85941

HHSI102201800007I

U. S. DEPARTMENT OF HEALTH AND HUMAN SERVICES
INDIAN HEALTH SERVICE
PHOENIX AREA OFFICE

No.	Date	Description

Issue Date:	11/3/2022
Project No:	21-020
Scale:	
Drawn By:	RMW
Checked By:	JSC

FINAL CD

Sheet Title:

PANEL SCHEDULES

Sheet Number:

E601

Autodesk Docs://21-020 Whiteriver Admin v2022/21-020 10 MEP WRMOB 2022.rvt
11/2/2022 10:06:31 AM

NEW PANELBOARD

Switchboard: SES-AOB

Location: ELECTRICAL ROOM 187
Supply From: MDP
Mounting: SURFACE
Enclosure: NEMA 1

Volts: 480/277 Wye
Phases: 3
Wires: 4

A.I.C. Rating: 18,000
Mains Type: MCB
Mains Rating: 400 A
MCB Rating: 400 A

Notes:
SQUARE D I-LINE TYPE HCM OR APPROVED EQUAL, SES RATED

CKT	Circuit Description	# of Poles	Frame Size	Trip Rating	Load	Remarks
1	INCOMING MAIN CIRCUIT BREAKER	3	400 A	400 A	0 VA	L FRAME
2	TRANSFORMER AOB-L1	3	150 A	150 A	55546 VA	H FRAME
3	PANEL AOB-H1	3	150 A	100 A	25716 VA	H FRAME
4	RTU-1	3	100 A	25 A	13685 VA	F FRAME
5	RTU-2	3	100 A	25 A	13087 VA	F FRAME
6	RTU-3	3	100 A	25 A	13087 VA	F FRAME
7	RTU-4	3	100 A	45 A	23185 VA	F FRAME
8	RTU-5	3	100 A	25 A	16608 VA	F FRAME
9	RTU-6	3	100 A	20 A	10098 VA	F FRAME
10	RTU-7	3	100 A	25 A	13552 VA	F FRAME
11	RTU-8	3	100 A	15 A	7773 VA	F FRAME
12	TVSS	3	100 A	0 A	0 VA	BRKR. PER MFGR
13	PREPARED SPACE	3	150 A	0 A	0 VA	F FRAME
14	PREPARED SPACE	3	150 A	0 A	0 VA	H FRAME
15	PREPARED SPACE	3	250 A	0 A	0 VA	J FRAME
				Total Conn. Load:	192337 VA	
				Total Amps:	231 A	

Legend:

Load Classification	Connected Load	Demand Factor	Estimated Demand	Panel Totals	
POWER, OTHER	111075 VA	100.00%	111075 VA		
				Total Conn. Load:	192337 VA
				Total Est. Demand:	192337 VA
				Total Conn. Current:	231 A
				Total Est. Demand Current:	231 A

Notes:

NEW PANELBOARD

Branch Panel: AOB-H1

Location: ELECTRICAL ROOM 187
Supply From:
Mounting: SURFACE
Enclosure: NEMA 1

Volts: 480/277 Wye
Phases: 3
Wires: 4

A.I.C. Rating: 18,000
Bus Rating: 125 A
MCB Rating: MLO

Notes:
SQUARE D NF OR APPROVED EQUAL

CKT	Circuit Description	Trip (A)	Poles	"A" PHASE (VA)		"B" PHASE (VA)		"C" PHASE (VA)		Poles	Trip (A)	Circuit Description	CKT
1	WATER HEATER WH-1	30	3	6000	827					1	20	LTS- INTERIOR CORRIDORS	2
3	--	--	--			6000	3522			1	20	LTS- INTERIOR WEST	4
5	--	--	--					6000	2871	1	20	LTS- INTERIOR EAST	6
7	SPACE	--	1	--	496					1	20	LTS- EXTERIOR	8
9	SPACE	--	1			--	0			1	20	SPARE	10
11	SPACE	--	1					--	0	1	20	SPARE	12
13	SPACE	--	1	--	0					1	20	SPARE	14
15	SPACE	--	1			--	0			1	20	SPARE	16
17	SPACE	--	1					--	0	1	20	SPARE	18
19	SPACE	--	1	--	0					1	20	SPARE	20
21	SPACE	--	1			--	0			1	20	SPARE	22
23	SPACE	--	1					--	0	1	20	SPARE	24
25	SPACE	--	1	--	0					1	20	SPARE	26
27	SPACE	--	1			--	0			1	20	SPARE	28
29	SPACE	--	1					--	0	1	20	SPARE	30
			Total Load:	7323 VA		9522 VA		8871 VA					
			Total Amps:	26 A		35 A		33 A					

Load Classification	Connected Load	Demand Factor	Estimated Demand	Panel Totals	
Lighting	7716 VA	100.00%	7716 VA		
POWER, OTHER	18000 VA	100.00%	18000 VA	**Total Conn. Load:**	25716 VA
				Total Est. Demand:	25716 VA
				Total Conn. Current:	32 A
				Total Est. Demand Current:	31 A

NEW PANELBOARD

Branch Panel: AOB-L1

Location: ELECTRICAL ROOM 187
Supply From: TRANSFORMER T-MOB-L1
Mounting: SURFACE
Enclosure: NEMA 1

Volts: 120/208 Wye
Phases: 3
Wires: 4

A.I.C. Rating: 10,000
Bus Rating: 400 A
MCB Rating: 400AF/400AT

Notes:
SQUARE D NQ OR APPROVED EQUAL

CKT	Circuit Description	Trip (A)	Poles	A		B		C		Poles	Trip (A)	Circuit Description	CKT
1	RCPT- DIRECTOR 111, PIV 112	20	1	1080	1260					1	20	RCPT- WOMENS 137, MENS 138	2
3	RCPT- ER/LR 118, PAYROLL 117	20	1			1080	900			1	20	RCPT- STAFF BRK 139	4
5	RCPT- WORKSTATIONS HUMAN RES 108	20	1					1440	1500	1	20	RCPT- AC STAFF BRK 139	6
7	RCPT- WORKSTATIONS HUMAN RES 108	20	1	1440	1500					1	20	RCPT- AC STAFF BRK 139	8
9	RCPT- HUMAN RESOURCE 108	20	1			180	1500			1	20	RCPT- COFFEE STAFF BRK 139	10
11	RCPT- COPIER FILE/COPIER 116	20	1					1500	1500	1	20	RCPT- REFRIGERATOR STAFF BRK 139	12
13	RCPT- FILE/COPIER 116	20	1	1500	540					1	20	RCPT- FLOORBOXES TRAINING RM 2 140	14
15	RCPT- CONSULTATION 115	20	1			540	1440			1	20	RCPT- TRAINING RM 2 140	16
17	RCPT- WORKSTATIONS HUMAN RES 108	20	1					1440	300	1	20	RCPT- TRAINING RM2 140	18
19	RCPT- WORKSTAT PURCH REF CARE 121	20	1	1440	360					1	20	RCPT- FLOORBOX TRAINING RM 1 141	20
21	RCPT- WORKSTAT PURCH REF CARE 121	20	1			1440	360			1	20	RCPT- FLOORBOX TRAINING RM 1 141	22
23	RCPT- WORKSTAT PURCH REF CARE 121	20	1					1260	360	1	20	RCPT- FLOORBOX TRAINING RM 1 141	24
25	RCPT- WORKSTAT PURCH REF CARE 121	20	1	720	360					1	20	RCPT- FLOORBOX TRAINING RM 1 141	26
27	RCPT- WORKSTAT PURCH REF CARE 121	20	1			1440	1440			1	20	RCPT- TRAINING RM 1 141	28
29	RCPT- COPIER PURCH REF CARE 121	20	1					180	180	1	20	RCPT- TRAINING RM 1 141	30
31	RCPT- LOBBY 102, CORR 105	20	1	1260	1440					1	20	RCPT- WORKSTATION STAFF DEV 150	32
33	RCPT- FLOORBOXES CONFERENCE 103	20	1			900	720			1	20	RCPT- WORKSTATION STAFF DEV 150	34
35	RCPT- CONFERENCE 103	20	1					1440	900	1	20	RCPT- SECURE STOR 140A, STAFF DEV 150	36
37	RCPT- CONFERENCE 103	20	1	300	1500					1	20	RCPT- COPIER COPIER 149	38
39	RCPT- FLOORBOXES CONFERENCE 104	20	1			900	1440			1	20	RCPT- ROOM 152, ROOM 153	40
41	RCPT- CONFERENCE 104	20	1					1260	1440	1	20	RCPT- ROOM 154, ROOM 155	42
43	RCPT- CONFERENCE 104	20	1	300	720					1	20	RCPT- STOR FILES 151, QUALITY MGMT 144	44
45	RCPT- DATA CLOSET 142 RACK	20	1			1500	1260			1	20	RCPT- NORTH EXTERIOR	46
47	RCPT- DATA CLOSET 142 RACK	20	1					1500	0	1	20	RCPT- ROOF	48
49	RCPT- DATA CLOSET 142 RACK	20	1	1500	180					1	20	EXHAUST FANS EF-6,7,8,9,10	50
51	RCPT- DATA CLOSET 142 RACK	20	1			1500	0			1	20	SPARE	52
53	RECEPTACLES	20	1					900	0	1	20	SPARE	54
			Total Load:	17400 VA		18540 VA		17100 VA					
			Total Amps:	145 A		155 A		143 A					

Load Classification	Connected Load	Demand Factor	Estimated Demand	Panel Totals	
RECEPTACLES	51420 VA	59.72%	30710 VA		
POWER, OTHER	1620 VA	100.00%	1620 VA	**Total Conn. Load:**	53040 VA
				Total Est. Demand:	32330 VA
				Total Conn. Current:	148 A
				Total Est. Demand Current:	90 A

NEW PANELBOARD

Branch Panel: AOB-L2

Location: ELECTRICAL ROOM 187
Supply From:
Mounting: SURFACE
Enclosure: NEMA 1

Volts: 120/208 Wye
Phases: 3
Wires: 4

A.I.C. Rating: 10,000
Bus Rating: 225 A
MCB Rating: MLO

Notes:
SQUARE D NQ OR APPROVED EQUAL

CKT	Circuit Description	Trip (A)	Poles	"A" PHASE (VA)		"B" PHASE (VA)		"C" PHASE (VA)		Poles	Trip (A)	Circuit Description	CKT
1	RCPT- PRC DIR 125, PURCH REF CARE 121	20	1	720	1440					1	20	RCPT- COMP. OFF 146, QM 144	2
3	RCPT- WORKSTATION PURCH REF CARE...	20	1			1440	1440			1	20	RCPT- -PI DIR 147, UTIL REVIEW 148	4
5	RCPT- MEN 106, WOMEN 107	20	1					1260	900	1	20	RCPT- QUALITY MGMT 144	6
7	RCPT- ROOF	20	1	0	720					1	20	RCPT- QUALITY MGNT 144	8
9	RCPT- ROOM 170	20	1			720	1440			1	20	RCPT- INFECTION CONTROL163, EMPLOYE...	10
11	RCPT- ROOM 171, ROOM 172	20	1					1440	1620	1	20	RCPT- QUALITY MGNT 144	12
13	RCPT- ROOM 173, ROOM 174	20	1	1800	720					1	20	RCPT- NURSE SPECIALIST 159	14
15	RCPT- DIRECTOR 169, ASST. DIRECTOR 168	20	1			1440	1440			1	20	RCPT- ADMIN 177, ADMIN 178	16
17	RCPT- COPY/STOR. 167	20	1					1500	1440	1	20	RCPT- ADMIN 179, ADMIN 180	18
19	RECEPTACLES	20	1	720	1440					1	20	RCPT- ADMIN 184, ADMIN 183	20
21	RCPT- OFFICE 166	20	1			720	1440			1	20	RCPT- ADMIN 181, ADMIN 182	22
23	RCPT- EXAM 165	20	1					720	1440	1	20	RCPT- ROOM 156	24
25	RCPT- EXAM 165	20	1	1440	720					1	20	RCPT- ROOM 157	26
27	RCPT- ADMIN 185, ADMIN 186	20	1			1440	0			1	20	SPARE	28
29	RCPT- CORRIDOR 175, CORRIDOR 176	20	1					1260	0	1	20	SPARE	30
31	RCPT- CORRIDOR 136	20	1	900	1176					1	20	JIB CRANE	32
33	RCPT- ELECT 187	20	1			720	180			1	20	PWR- BACKFLOW BOX HEATER	34
35	RCPT- MECH 188	20	1					250	180	1	20	EXHAUST FANS-1,2,3,4,5	36
37	SPARE	20	1	0	28					1	20	HOT WATER RETURN PUMP HW/RP-1	38
39	SPARE	20	1			0	2184			2	30	CU-1/AHU-1	40
41	SPARE	20	1					0	2184	--	--	--	42
			Total Load:	11824 VA		14604 VA		14194 VA					
			Total Amps:	99 A		125 A		121 A					

Load Classification	Connected Load	Demand Factor	Estimated Demand	Panel Totals	
RECEPTACLES	34080 VA	64.67%	22040 VA		
POWER, OTHER	6542 VA	100.00%	6542 VA	**Total Conn. Load:**	40622 VA
				Total Est. Demand:	28582 VA
				Total Conn. Current:	115 A
				Total Est. Demand Current:	79 A

JSRa
JOHNSON SMITTHIPONG & ROSAMOND ASSOCIATES, INC.
5210 E Williams Cir • Ste 600 • Tucson, AZ 85711
(520) 547-7904 • www.jsrarchinc.com

Consultants:

Bernhard TME Engineering

REGISTERED PROFESSIONAL ENGINEER 64509 JACOB S. CLARK 11/03/22 EXPIRES 09/30/24

WHITERIVER ADMINISTRATION OFFICE BUILDING

200 W HOSPITAL DR
WHITERIVER, AZ 85941

HHSI102201800007I

U. S. DEPARTMENT OF HEALTH AND HUMAN SERVICES
INDIAN HEALTH SERVICE
PHOENIX AREA OFFICE

No.	Date	Description

Issue Date:	11/3/2022
Project No:	21-020
Scale:	
Drawn By:	RMW
Checked By:	JSC

FINAL CD

Sheet Title:

PANEL SCHEDULES

Sheet Number:

E602

Autodesk Docs://21-020 Whiteriver Admin v2022/21-020 10 MEP WRMOB 2022.rvt
11/2/2022 10:06:31 AM

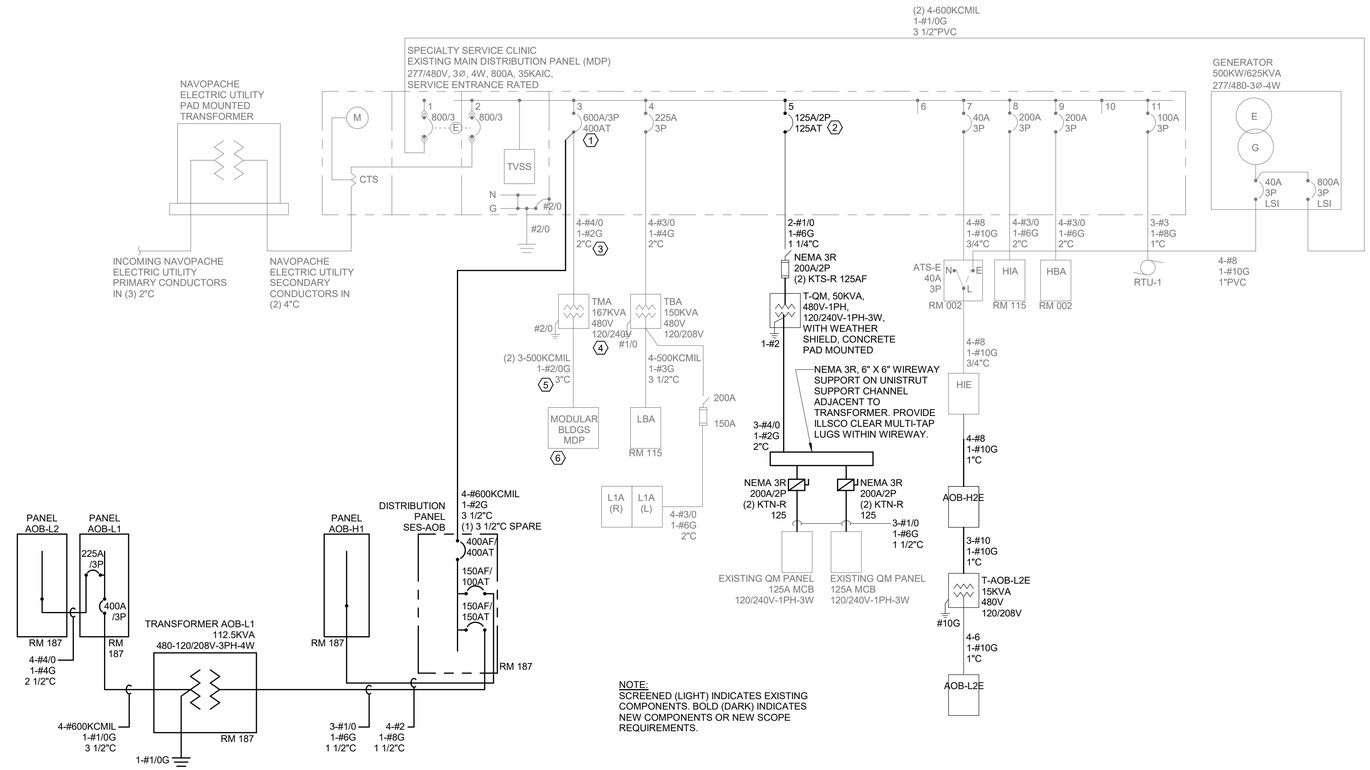

NOTE:
SCREENED (LIGHT) INDICATES EXISTING COMPONENTS. BOLD (DARK) INDICATES NEW COMPONENTS OR NEW SCOPE REQUIREMENTS.

B1 ONE-LINE DIAGRAM

NTS

GENERAL NOTES:

A. UPON THE REMOVAL OF THE EXISTING TRAILERS AND THE RELOCATION OF THE QM TRAILER CONTRACTOR TO PROVIDE A DEMAND RECORDING METER FOR 30 DAYS ON THE INCOMING FEEDER TO EXISTING MAIN DISTRIBUTION PANEL "MDP". RECORDING METER TO BE SET FOR RECORDING ON ONE MINUTE INTERVALS. UPON COMPLETION CONTRACTOR TO DOWNLOAD RECORDING AND ISSUE A REPORT TO OWNER, ARCHITECT AND ENGINEER FOR REVIEW AND RECORD.

KEYED NOTES:

1. EXISTING 600AF/400AT LSI TO REMAIN AND RE-UTILIZED TO SOURCE NEW ADMINISTRATION OFFICE BUILDING SERVICE ENTRANCE "SES-MOB".
2. PROVIDE NEW MATCHING EATON FD35K 125A/2P, RATED CIRCUIT BREAKER WITHIN EXISTING CIRCUIT BREAKER SPACE.
3. REMOVE EXISTING FEEDER CONDUCTORS AND ABANDON EXISTING CONDUIT IN PLACE.
4. REMOVE EXISTING TRANSFORMER, GROUND AND CONCRETE PAD.
5. REMOVE EXISTING FEEDER CONDUCTORS AND UNDERGROUND CONDUITS.
6. REMOVE EXISTING DISTRIBUTION PANEL, CONCRETE PAD, FEEDER CONDUCTORS AND UNDERGROUND CONDUITS TO REMOVED EXISTING TRAILERS.

JSRa
JOHNSON SMITTHIPONG & ROSAMOND ASSOCIATES, INC.
5210 E Williams Cir • Ste 600 • Tucson, AZ 85711
(520) 547-7904 • www.jsrarchinc.com

Consultants:

Bernhard TME Engineering

REGISTERED PROFESSIONAL ENGINEER
64509
JACOB S. CLARK
11/03/22
EXPIRES 09/30/24

WHITERIVER ADMINISTRATION OFFICE BUILDING

200 W HOSPITAL DR
WHITERIVER, AZ 85941

HHSI102201800007I

U. S. DEPARTMENT OF HEALTH AND HUMAN SERVICES
INDIAN HEALTH SERVICE
PHOENIX AREA OFFICE

No.	Date	Description

Issue Date:	11/3/2022
Project No:	21-020
Scale:	NTS
Drawn By:	Author
Checked By:	Checker

FINAL CD

Sheet Title:

ONE-LINE DIAGRAM

Sheet Number:

E701

Autodesk Docs://21-020 Whiteriver Admin v2022/21-020 10 MEP-WRMOB 2022.rvt
11/2/2022 10:06:32 AM