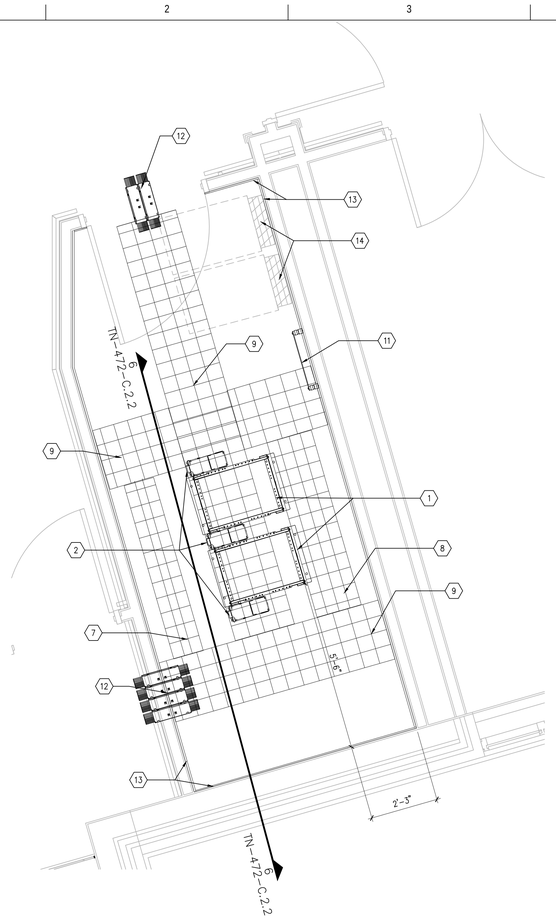

1 TELECOM ROOM LAYOUT - BLDG. 2 - FLOOR 2
SCALE: 1/2" = 1'-0"

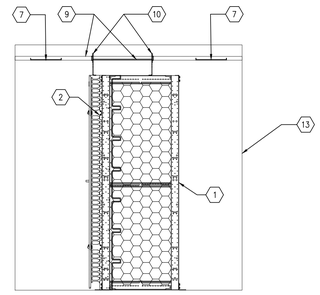

2 SOUTH WALL ELEVATION - BLDG. 2 - FLOOR 2
SCALE: N.T.S

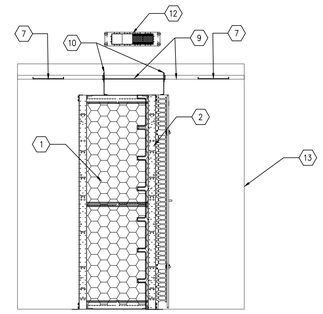

3 NORTH WALL ELEVATION - BLDG. 2 - FLOOR 2
SCALE: N.T.S

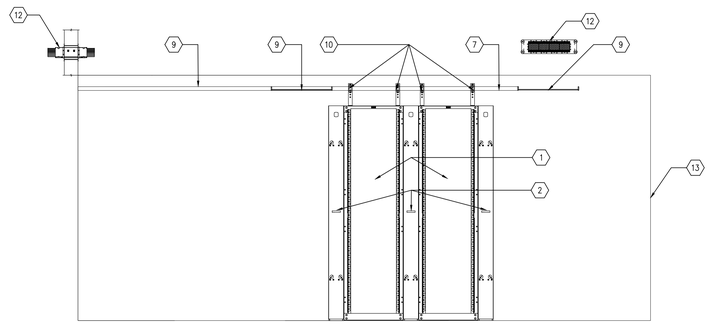

4 WEST WALL ELEVATION - BLDG. 2 - FLOOR 2
SCALE: N.T.S

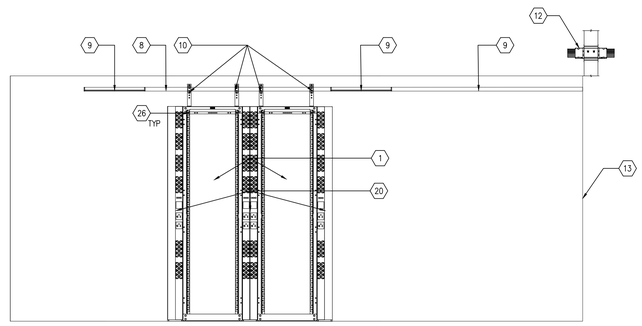

5 EAST WALL ELEVATION - BLDG. 2 - FLOOR 2
SCALE: N.T.S

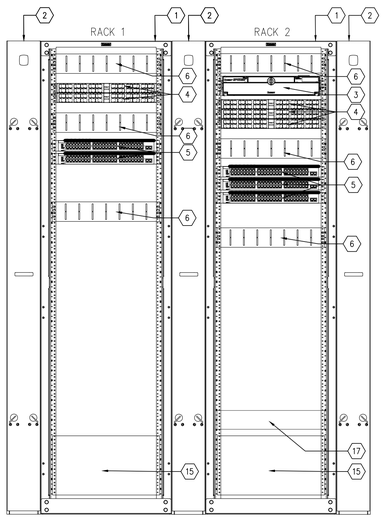

6 RACK ELEVATION - FRONT VIEW - BLDG. 2 - FLOOR 2
SCALE: N.T.S.

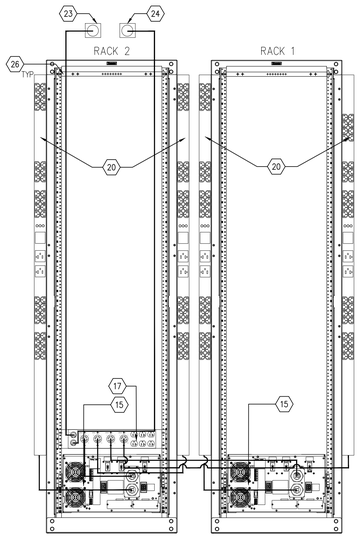

7 RACK ELEVATION - REAR VIEW - BLDG. 2 - FLOOR 2
SCALE: N.T.S.

GENERAL NOTES

1. CONTRACTOR SHALL COORDINATE THE EQUIPMENT'S INSTALLATION AND FINAL LOCATION WITH THE ELECTRICAL AND MECHANICAL DIVISION. REFER TO ELECTRICAL, MECHANICAL AND PLUMBING DRAWINGS.
2. CONTRACTOR SHALL INSTALL PATHWAY DIVIDERS, RADIUS DROP AND ANY OTHER FITTING FOR A PROPER CABLE RUNWAY INSTALLATION.
3. CONTRACTOR SHALL COORDINATE THE EZ-PATH LOCATIONS WITH THE PATHWAY SYSTEM LAYOUT OUTSIDE EACH TELECOM ROOM. REFER TO FLOOR PLAN DRAWINGS.
4. CONTRACTOR SHALL INSTALL BACKBONE RISER SLEEVES OF THE SIZE AS INDICATED ON THE PLANS. REFER TO SECTION 27 15 00 COMMUNICATIONS STRUCTURED CABLING AND SECTION 27 05 33 RACEWAYS AND BOXES FOR COMMUNICATIONS SYSTEMS.
5. CONTRACTOR SHALL X-RAY CONCRETE FLOOR BEFORE CORE DRILLING. CONTRACTOR SHALL COORDINATE WITH THE COR BEFORE BEGINNING DRILLING.
6. CONTRACTOR SHALL FIRESTOP RISER SLEEVES AND EMPTY SPARE RISER SLEEVES. REFER TO SECTION 07 84 00 FIRESTOPPING.
7. CONTRACTOR SHALL INSTALL AN VERTICAL LADDER TYPE CABLE TRAY ON THE WALL ABOVE THE VERTICAL RISER SLEEVES FOR BACKBONE CABLE SUPPORT AS INDICATED ON THE PLANS. THE CABLE TRAY SHALL BE SECURELY ANCHORED TO THE WALL SUFFICIENT TO SUPPORT THE TOTAL WEIGHT OF CABLES AND CABLE TRAY PLUS 50%.
8. CONTRACTOR SHALL INSTALL CABLE SUPPORTS SUFFICIENT TO SUPPORT COMMUNICATIONS CABLES ON THE VERTICAL CABLE TRAY WITHOUT DAMAGING OR DEFORMING THE CABLE.
9. CONTRACTOR SHALL LABEL EACH CABLE AT 42 INCHES A.F.F. ON EACH FLOOR. REFER TO SECTION 27 15 00 COMMUNICATIONS STRUCTURED CABLING.

KEYED NOTES

1. MIGHTY 20 Mo CHANNEL RACK WITH HEXGUARD CABLE PASSAGE, 23.75" X 30" DEEP, 7' HIGH
2. VERTICAL CABLE MANAGER, 6.45" WIDE X 10.26" DEEP.
3. FIBER OPTIC ENCLOSURE WITH DUPLEX-LC, MPO CASSETS
4. ANGLED PATCH PANEL, 48-PORT, 1U, HIGH DENSITY.
5. ETHERNET SWITCH (GFGI)
6. HORIZONTAL CABLE MANAGER, SINGLE SIDED.
7. 12" CABLE WIRE BASKET TRAY
8. 18" CABLE WIRE BASKET TRAY
9. 24" CABLE WIRE BASKET TRAY.
10. WIRE BASKET CABLE TRAY ELEVATION BRACKETS
11. 24-IN. TMGB GROUND BUS BAR
12. PROVIDE FIRE STOPPING DEVICE WITH SPLIT WALL PLATE. EZ PATH SERIES 44+ FIRE RATED PATHWAY OR APPROVED EQUAL.
13. AC GRADE, FIRE RETARDANT PLYWOOD, PAINTED WITH TWO COATS OF HIGH GLOSS, FIRE RETARDANT PAINT APPLIED TO ALL WALLS.
14. ELECTRICAL PANEL BOARDS. REFER TO ELECTRICAL DRAWINGS.
15. RACK-MOUNTED, 5KW, 208V, UPS WITH NEMA 20A, L21-20P INPUT AND L21-20R OUTPUT.
16. WALL MOUNT CABINET, 24"x24"x36", WITH FAN KIT AND TWO SETS OF RAILS, SOLID DOOR. CHATSWORTH 11840-736, FAN KIT 40972-001, 36" CABINET RAILS 12787-524, OR APPROVED EQUAL.
17. 30 A, 208 V, 3-PHASE, ZPDU, (4) NEMA L21-20R, (6) NEMA 5-20 OUTLETS AND 2 x 10' POWER CORDS TERMINATING IN NEMA L21-30P. ZONIT ZPDS-208V30A -L21-4L21-20R-CR OR APPROVED EQUAL
18. SIDE A POWER, REQUIRES A 208V, 60A, THREE-PHASE CIRCUIT TERMINATING IN A HARD-WIRED JUNCTION BOX.
19. SIDE B POWER, REQUIRES A 208V, 60A, THREE-PHASE CIRCUIT TERMINATING IN A HARD-WIRED JUNCTION BOX.
20. VERTICAL RACK PDU, L21-20 PLUG, 3-PHASE WYE, 20A, 208V INPUT, (24) C13 (6) C19 (6) 5-20R OUTLETS, 208V OUTPUT. CHATSWORTH L1-1N0K4 OR APPROVED EQUAL.
21. SIDE-A POWER, L21-20R TWIST-LOCK RECEPTACLE 208V, 20A, 3 PHASE, 8.5 FT AFF, COORDINATE LOCATION WITH CONTRACTOR.
22. SIDE-B POWER, L21-20R TWIST-LOCK RECEPTACLE 208V, 20A, 3-PHASE, 8.5 FT AFF, COORDINATE LOCATION WITH CONTRACTOR.
23. SIDE-A POWER, L21-30R TWIST-LOCK RECEPTACLE 208V, 30A, 3-PHASE, 8.5 FT AFF, COORDINATE LOCATION WITH CONTRACTOR.
24. SIDE-B POWER, L21-30R TWIST-LOCK RECEPTACLE 208V, 30A, 3-PHASE, 8.5 FT AFF, COORDINATE LOCATION WITH CONTRACTOR.
25. 60 A, 208 V, 3-PHASE ZONE PDU BASE UNIT - REAR CIRCUITS WITH SIX NEMA L21-20R OUTPUT RECEPTACLES AND TWO 10' POWER CORDS TERMINATING IN HARD-WIRED JUNCTION BOX. ZONIT ZPDS-208V60A-HW-6L21-2 OR APPROVED EQUAL.
26. TOP-MOUNTED RACK BONDING BUSBAR (RBB)

Revisions:	Date:

CONSULTANT
HFS COMPANY
8718 Botts Lane
San Antonio, Texas 78217
www.hfscompany.com
Phone: (210) 816-4784
Fax: (210) 881-6808
jbianco@hfscompany.com

PROJECT MANAGEMENT
HFS COMPANY
8718 Botts Lane
San Antonio, Texas 78217
www.hfscompany.com
Phone: (210) 816-4784
Fax: (210) 881-6808
jbianco@hfscompany.com

REGISTERED COMMUNICATIONS DISTRIBUTION DESIGNER
Bicsi
Raymond Martinez Jr.
BICSI ID # 143493
EXPIRES 12-31-24
RCDD
21-OCT-22

Construction and Facilities Management

VA U.S. Department of Veterans Affairs

Drawing Title: BLDG. 2 - SECOND FLOOR - TECHNOLOGY TELECOM ROOM PLAN	Phase: 100% CONSTRUCTION DOCUMENTS	Project Title: CINCINNATI VAMC EHRM INFRASTRUCTURE UPGRADES	Project Number: 539-21-701
			Building Number: 2
Approved: Project Director	FULLY SPRINKLERED	Location: 3200 VINE ST., CINCINNATI, OH	Drawing Number: TN-472-C.2.2
		Issue Date: 18-OCT-2022 / Checked: RMJr / Drawn: VV	

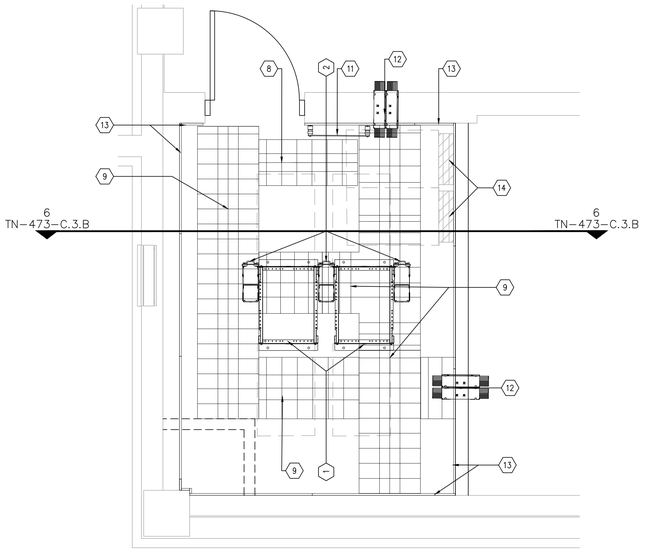

1 TELECOM ROOM LAYOUT - BLDG. 3 - BASEMENT
SCALE: 1/2" = 1'-0"

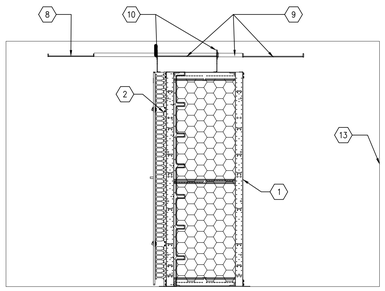

2 WEST WALL ELEVATION - BLDG. 3 - BASEMENT
SCALE: N.T.S

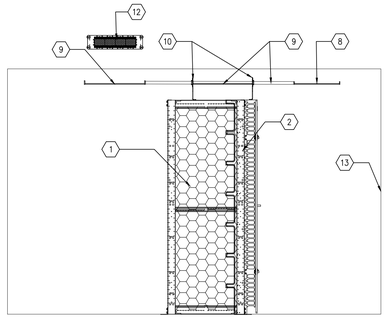

3 EAST WALL ELEVATION - BLDG. 3 - BASEMENT
SCALE: N.T.S

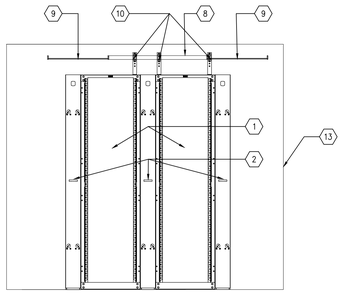

4 NORTH WALL ELEVATION - BLDG. 3 - BASEMENT
SCALE: N.T.S

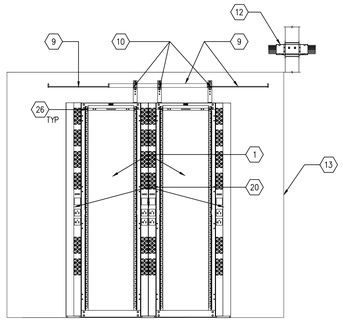

5 SOUTH WALL ELEVATION - BLDG. 3 - BASEMENT
SCALE: N.T.S

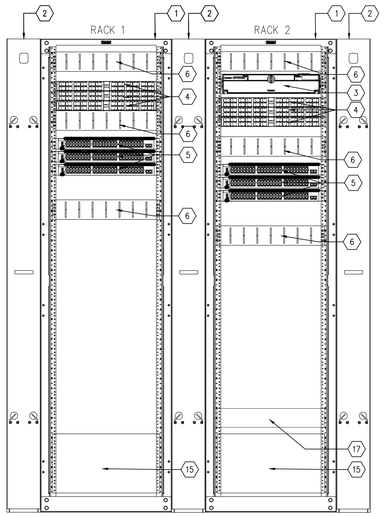

6 RACK ELEVATION - FRONT VIEW - BLDG. 3 - BASEMENT
SCALE: N.T.S.

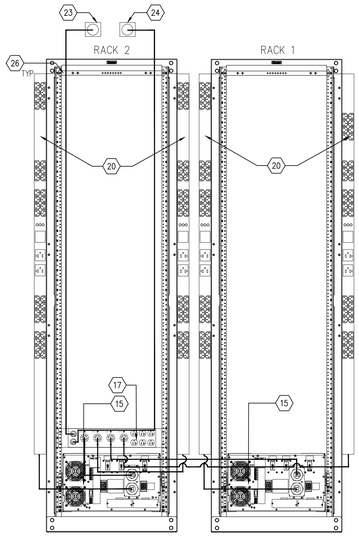

7 RACK ELEVATION - REAR VIEW - BLDG. 3 - BASEMENT
SCALE: N.T.S.

GENERAL NOTES

1. CONTRACTOR SHALL COORDINATE THE EQUIPMENT'S INSTALLATION AND FINAL LOCATION WITH THE ELECTRICAL AND MECHANICAL DIVISION. REFER TO ELECTRICAL, MECHANICAL AND PLUMBING DRAWINGS.
2. CONTRACTOR SHALL INSTALL PATHWAY DIVIDERS, RADIUS DROP AND ANY OTHER FITTING FOR A PROPER CABLE RUNWAY INSTALLATION.
3. CONTRACTOR SHALL COORDINATE THE EZ-PATH LOCATIONS WITH THE PATHWAY SYSTEM LAYOUT OUTSIDE EACH TELECOM ROOM. REFER TO FLOOR PLAN DRAWINGS.
4. CONTRACTOR SHALL INSTALL BACKBONE RISER SLEEVES OF THE SIZE AS INDICATED ON THE PLANS. REFER TO SECTION 27 15 00 COMMUNICATIONS STRUCTURED CABLING AND SECTION 27 05 33 RACEWAYS AND BOXES FOR COMMUNICATIONS SYSTEMS.
5. CONTRACTOR SHALL X-RAY CONCRETE FLOOR BEFORE CORE DRILLING. CONTRACTOR SHALL COORDINATE WITH THE COR BEFORE BEGINNING DRILLING.
6. CONTRACTOR SHALL FIRESTOP RISER SLEEVES AND EMPTY SPARE RISER SLEEVES. REFER TO SECTION 07 84 00 FIRESTOPPING.
7. CONTRACTOR SHALL INSTALL AN VERTICAL LADDER TYPE CABLE TRAY ON THE WALL ABOVE THE VERTICAL RISER SLEEVES FOR BACKBONE CABLE SUPPORT AS INDICATED ON THE PLANS. THE CABLE TRAY SHALL BE SECURELY ANCHORED TO THE WALL SUFFICIENT TO SUPPORT THE TOTAL WEIGHT OF CABLES AND CABLE TRAY PLUS 50%.
8. CONTRACTOR SHALL INSTALL CABLE SUPPORTS SUFFICIENT TO SUPPORT COMMUNICATIONS CABLES ON THE VERTICAL CABLE TRAY WITHOUT DAMAGING OR DEFORMING THE CABLE.
9. CONTRACTOR SHALL LABEL EACH CABLE AT 42 INCHES A.F.F. ON EACH FLOOR. REFER TO SECTION 27 15 00 COMMUNICATIONS STRUCTURED CABLING.

KEYED NOTES

1. MIGHTY 20 Mo CHANNEL RACK WITH HEXGUARD CABLE PASSAGE, 23.75" X 30" DEEP, 7' HIGH
2. VERTICAL CABLE MANAGER, 6.45" WIDE X 10.26" DEEP.
3. FIBER OPTIC ENCLOSURE WITH DUPLEX-LC, MPO CASSETS
4. ANGLED PATCH PANEL, 48-PORT, 1U, HIGH DENSITY.
5. ETHERNET SWITCH (GFGI)
6. HORIZONTAL CABLE MANAGER, SINGLE SIDED.
7. 12" CABLE WIRE BASKET TRAY
8. 18" CABLE WIRE BASKET TRAY
9. 24" CABLE WIRE BASKET TRAY.
10. WIRE BASKET CABLE TRAY ELEVATION BRACKETS
11. 24-IN. TMGB GROUND BUS BAR
12. PROVIDE FIRE STOPPING DEVICE WITH SPLIT WALL PLATE. EZ PATH SERIES 44+ FIRE RATED PATHWAY OR APPROVED EQUAL.
13. AC GRADE, FIRE RETARDANT PLYWOOD, PAINTED WITH TWO COATS OF HIGH GLOSS, FIRE RETARDANT PAINT APPLIED TO ALL WALLS.
14. ELECTRICAL PANEL BOARDS. REFER TO ELECTRICAL DRAWINGS.
15. RACK-MOUNTED, 5KW, 208V, UPS WITH NEMA 20A, L21-20P INPUT AND L21-20R OUTPUT.
16. WALL MOUNT CABINET, 24"x24"x36", WITH FAN KIT AND TWO SETS OF RAILS, SOLID DOOR. CHATSWORTH 11840-736, FAN KIT 40972-001, 36" CABINET RAILS 12787-524, OR APPROVED EQUAL.
17. 30 A, 208 V, 3-PHASE, ZPDU, (4) NEMA L21-20R, (6) NEMA 5-20 OUTLETS AND 2 x 10' POWER CORDS TERMINATING IN NEMA L21-30P. ZONIT ZPDS-208V30A -L21-4L21-20R-CR OR APPROVED EQUAL
18. SIDE A POWER, REQUIRES A 208V, 60A, THREE-PHASE CIRCUIT TERMINATING IN A HARD-WIRED JUNCTION BOX.
19. SIDE B POWER, REQUIRES A 208V, 60A, THREE-PHASE CIRCUIT TERMINATING IN A HARD-WIRED JUNCTION BOX.
20. VERTICAL RACK PDU, L21-20 PLUG, 3-PHASE WYE, 20A, 208V INPUT, (24) C13 (6) C19 (6) 5-20R OUTLETS, 208V OUTPUT. CHATSWORTH L1-1N0K4 OR APPROVED EQUAL.
21. SIDE-A POWER, L21-20R TWIST-LOCK RECEPTACLE 208V, 20A, 3 PHASE, 8.5 FT AFF, COORDINATE LOCATION WITH CONTRACTOR.
22. SIDE-B POWER, L21-20R TWIST-LOCK RECEPTACLE 208V, 20A, 3-PHASE, 8.5 FT AFF, COORDINATE LOCATION WITH CONTRACTOR.
23. SIDE-A POWER, L21-30R TWIST-LOCK RECEPTACLE 208V, 30A, 3-PHASE, 8.5 FT AFF, COORDINATE LOCATION WITH CONTRACTOR.
24. SIDE-B POWER, L21-30R TWIST-LOCK RECEPTACLE 208V, 30A, 3-PHASE, 8.5 FT AFF, COORDINATE LOCATION WITH CONTRACTOR.
25. 60 A, 208 V, 3-PHASE ZONE PDU BASE UNIT - REAR CIRCUITS WITH SIX NEMA L21-20R OUTPUT RECEPTACLES AND TWO 10' POWER CORDS TERMINATING IN HARD-WIRED JUNCTION BOX. ZONIT ZPDS-208V60A-HW-6L21-2 OR APPROVED EQUAL.
26. TOP-MOUNTED RACK BONDING BUSBAR (RBB)

Revisions:	Date:

CONSULTANT

HFS COMPANY
8718 Botts Lane
San Antonio, Texas 78217
www.hfscompany.com
Phone: (210) 816-4784
Fax: (210) 881-6808
jbianco@hfscompany.com

PROJECT MANAGEMENT

HFS COMPANY
8718 Botts Lane
San Antonio, Texas 78217
www.hfscompany.com
Phone: (210) 816-4784
Fax: (210) 881-6808
jbianco@hfscompany.com

REGISTERED COMMUNICATIONS DISTRIBUTION DESIGNER
Bicsi
Raymond Martinez Jr.
BICSI ID # 143493
EXPIRES 12-31-24
RCDD
21-OCT-22

Construction and Facilities Management

VA U.S. Department of Veterans Affairs

Drawing Title: BLDG. 3 - BASEMENT - TECHNOLOGY TELECOM ROOM PLAN

Approved: Project Director

Phase: 100% CONSTRUCTION DOCUMENTS

FULLY SPRINKLERED

Project Title: CINCINNATI VAMC EHRM INFRASTRUCTURE UPGRADES

Location: 3200 VINE ST., CINCINNATI, OH

Project Number: 539-21-701

Building Number: 3

Drawing Number: TN-473-C.3.B

Issue Date	Checked	Drawn
18-OCT-2022	RMJr	VV

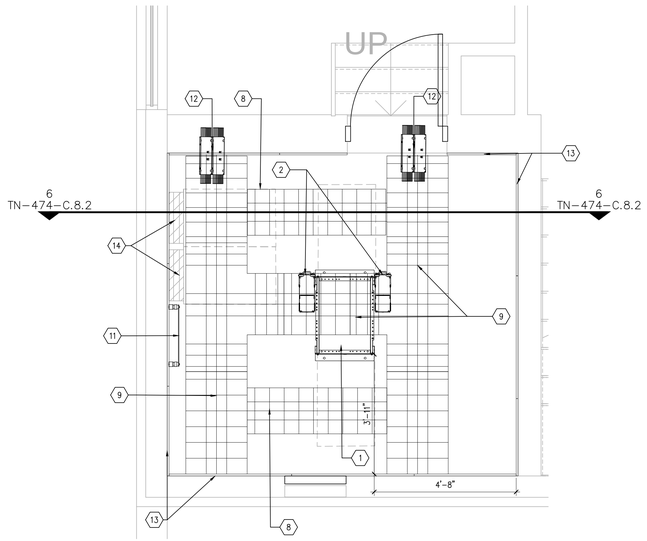

1 TELECOM ROOM LAYOUT - BLDG. 8 - FLOOR 2
SCALE: 1/2" = 1'-0"

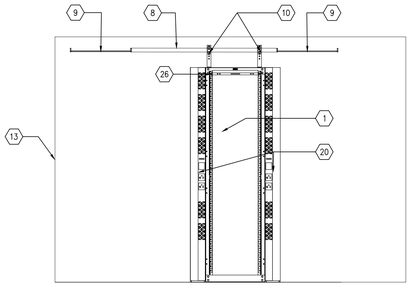

2 SOUTH WALL ELEVATION - BLDG. 8 - FLOOR 2
SCALE: N.T.S

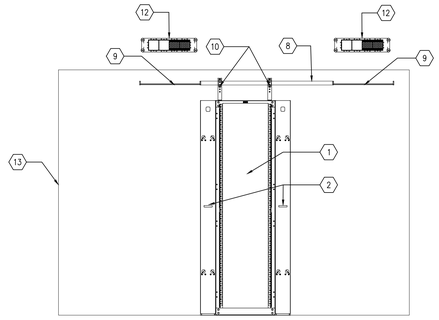

3 NORTH WALL ELEVATION - BLDG. 8 - FLOOR 2
SCALE: N.T.S

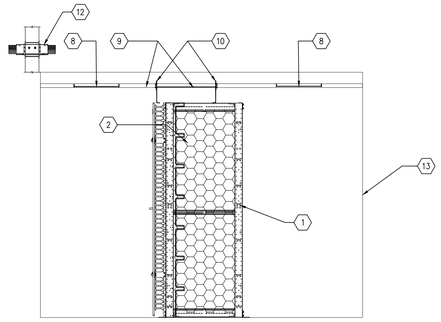

4 WEST WALL ELEVATION - BLDG. 8 - FLOOR 2
SCALE: N.T.S

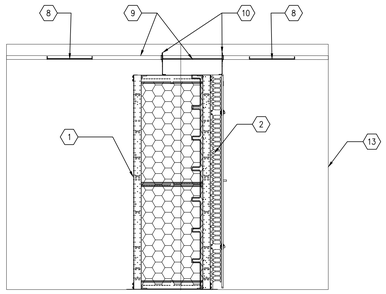

5 EAST WALL ELEVATION - BLDG. 8 - FLOOR 2
SCALE: N.T.S

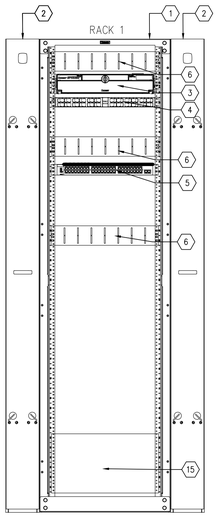

6 RACK ELEVATION - FRONT VIEW - BLDG. 8 - FLOOR 2
SCALE: N.T.S.

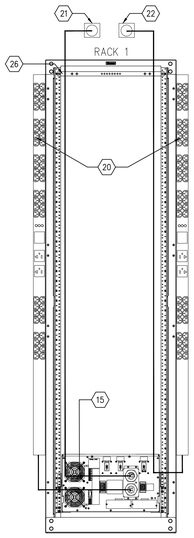

7 RACK ELEVATION - REAR VIEW - BLDG. 8 - FLOOR 2
SCALE: N.T.S.

GENERAL NOTES

1. CONTRACTOR SHALL COORDINATE THE EQUIPMENT'S INSTALLATION AND FINAL LOCATION WITH THE ELECTRICAL AND MECHANICAL DIVISION. REFER TO ELECTRICAL, MECHANICAL AND PLUMBING DRAWINGS.
2. CONTRACTOR SHALL INSTALL PATHWAY DIVIDERS, RADIUS DROP AND ANY OTHER FITTING FOR A PROPER CABLE RUNWAY INSTALLATION.
3. CONTRACTOR SHALL COORDINATE THE EZ-PATH LOCATIONS WITH THE PATHWAY SYSTEM LAYOUT OUTSIDE EACH TELECOM ROOM. REFER TO FLOOR PLAN DRAWINGS.
4. CONTRACTOR SHALL INSTALL BACKBONE RISER SLEEVES OF THE SIZE AS INDICATED ON THE PLANS. REFER TO SECTION 27 15 00 COMMUNICATIONS STRUCTURED CABLING AND SECTION 27 05 33 RACEWAYS AND BOXES FOR COMMUNICATIONS SYSTEMS.
5. CONTRACTOR SHALL X-RAY CONCRETE FLOOR BEFORE CORE DRILLING. CONTRACTOR SHALL COORDINATE WITH THE COR BEFORE BEGINNING DRILLING.
6. CONTRACTOR SHALL FIRESTOP RISER SLEEVES AND EMPTY SPARE RISER SLEEVES. REFER TO SECTION 07 84 00 FIRESTOPPING.
7. CONTRACTOR SHALL INSTALL AN VERTICAL LADDER TYPE CABLE TRAY ON THE WALL ABOVE THE VERTICAL RISER SLEEVES FOR BACKBONE CABLE SUPPORT AS INDICATED ON THE PLANS. THE CABLE TRAY SHALL BE SECURELY ANCHORED TO THE WALL SUFFICIENT TO SUPPORT THE TOTAL WEIGHT OF CABLES AND CABLE TRAY PLUS 50%.
8. CONTRACTOR SHALL INSTALL CABLE SUPPORTS SUFFICIENT TO SUPPORT COMMUNICATIONS CABLES ON THE VERTICAL CABLE TRAY WITHOUT DAMAGING OR DEFORMING THE CABLE.
9. CONTRACTOR SHALL LABEL EACH CABLE AT 42 INCHES A.F.F. ON EACH FLOOR. REFER TO SECTION 27 15 00 COMMUNICATIONS STRUCTURED CABLING.

KEYED NOTES

1. MIGHTY 20 Mo CHANNEL RACK WITH HEXGUARD CABLE PASSAGE, 23.75" X 30" DEEP, 7' HIGH
2. VERTICAL CABLE MANAGER, 6.45" WIDE X 10.26" DEEP.
3. FIBER OPTIC ENCLOSURE WITH DUPLEX-LC, MPO CASSETS
4. ANGLED PATCH PANEL, 48-PORT, 1U, HIGH DENSITY.
5. ETHERNET SWITCH (GFGI)
6. HORIZONTAL CABLE MANAGER, SINGLE SIDED.
7. 12" CABLE WIRE BASKET TRAY
8. 18" CABLE WIRE BASKET TRAY
9. 24" CABLE WIRE BASKET TRAY.
10. WIRE BASKET CABLE TRAY ELEVATION BRACKETS
11. 24-IN. TMGB GROUND BUS BAR
12. PROVIDE FIRE STOPPING DEVICE WITH SPLIT WALL PLATE. EZ PATH SERIES 44+ FIRE RATED PATHWAY OR APPROVED EQUAL.
13. AC GRADE, FIRE RETARDANT PLYWOOD, PAINTED WITH TWO COATS OF HIGH GLOSS, FIRE RETARDANT PAINT APPLIED TO ALL WALLS.
14. ELECTRICAL PANEL BOARDS. REFER TO ELECTRICAL DRAWINGS.
15. RACK-MOUNTED, 5KW, 208V, UPS WITH NEMA 20A, L21-20P INPUT AND L21-20R OUTPUT.
16. WALL MOUNT CABINET, 24"x24"x36", WITH FAN KIT AND TWO SETS OF RAILS, SOLID DOOR. CHATSWORTH 11840-736, FAN KIT 40972-001, 36" CABINET RAILS 12787-524, OR APPROVED EQUAL.
17. 30 A, 208 V, 3-PHASE, ZPDU, (4) NEMA L21-20R, (6) NEMA 5-20 OUTLETS AND 2 x 10' POWER CORDS TERMINATING IN NEMA L21-30P. ZONIT ZPDS-208V30A -L21-4L21-20R-CR OR APPROVED EQUAL
18. SIDE A POWER, REQUIRES A 208V, 60A, THREE-PHASE CIRCUIT TERMINATING IN A HARD-WIRED JUNCTION BOX.
19. SIDE B POWER, REQUIRES A 208V, 60A, THREE-PHASE CIRCUIT TERMINATING IN A HARD-WIRED JUNCTION BOX.
20. VERTICAL RACK PDU, L21-20 PLUG, 3-PHASE WYE, 20A, 208V INPUT, (24) C13 (6) C19 (6) 5-20R OUTLETS, 208V OUTPUT. CHATSWORTH L1-1N0K4 OR APPROVED EQUAL.
21. SIDE-A POWER, L21-20R TWIST-LOCK RECEPTACLE 208V, 20A, 3 PHASE, 8.5 FT AFF, COORDINATE LOCATION WITH CONTRACTOR.
22. SIDE-B POWER, L21-20R TWIST-LOCK RECEPTACLE 208V, 20A, 3-PHASE, 8.5 FT AFF, COORDINATE LOCATION WITH CONTRACTOR.
23. SIDE-A POWER, L21-30R TWIST-LOCK RECEPTACLE 208V, 30A, 3-PHASE, 8.5 FT AFF, COORDINATE LOCATION WITH CONTRACTOR.
24. SIDE-B POWER, L21-30R TWIST-LOCK RECEPTACLE 208V, 30A, 3-PHASE, 8.5 FT AFF, COORDINATE LOCATION WITH CONTRACTOR.
25. 60 A, 208 V, 3-PHASE ZONE PDU BASE UNIT - REAR CIRCUITS WITH SIX NEMA L21-20R OUTPUT RECEPTACLES AND TWO 10' POWER CORDS TERMINATING IN HARD-WIRED JUNCTION BOX. ZONIT ZPDS-208V60A-HW-6L21-2 OR APPROVED EQUAL.
26. TOP-MOUNTED RACK BONDING BUSBAR (RBB)

Revisions:	Date:

CONSULTANT

HFS COMPANY
8718 Botts Lane
San Antonio, Texas 78217
www.hfscompany.com
Phone: (210) 816-4784
Fax: (210) 881-6808
jbianco@hfscompany.com

PROJECT MANAGEMENT

HFS COMPANY
8718 Botts Lane
San Antonio, Texas 78217
www.hfscompany.com
Phone: (210) 816-4784
Fax: (210) 881-6808
jbianco@hfscompany.com

REGISTERED COMMUNICATIONS DISTRIBUTION DESIGNER
BICSI
Raymond Martinez Jr.
BICSI ID # 143493
EXPIRES 12-31-24
RCDD
21-OCT-22

Construction and Facilities Management

VA U.S. Department of Veterans Affairs

Drawing Title: BLDG. 8 - SECOND FLOOR - TECHNOLOGY TELECOM ROOM PLAN

Approved: Project Director

Phase: 100% CONSTRUCTION DOCUMENTS

FULLY SPRINKLERED

Project Title: CINCINNATI VAMC EHRM INFRASTRUCTURE UPGRADES

Location: 3200 VINE ST., CINCINNATI, OH

Project Number: 539-21-701

Building Number: 8

Drawing Number: TN-474-C.8.2

Issue Date	Checked	Drawn
18-OCT-2022	RMJr	VV

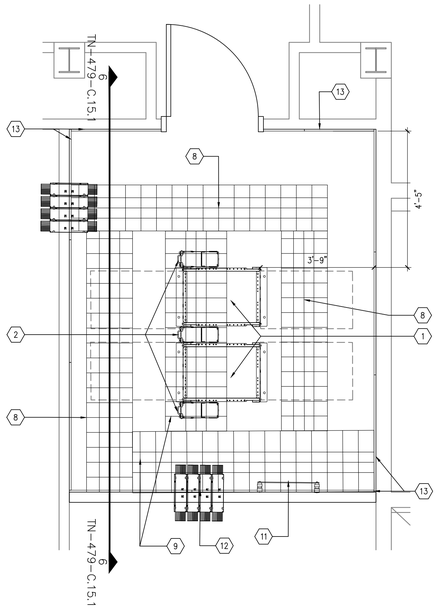

1 TELECOM ROOM LAYOUT - BLDG. 15 - FLOOR 1
SCALE: 1/2" = 1'-0"

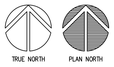

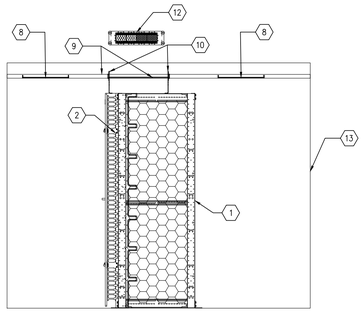

2 SOUTH WALL ELEVATION - BLDG. 15 - FLOOR 1
SCALE: N.T.S

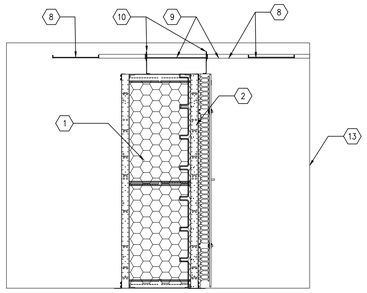

3 NORTH WALL ELEVATION - BLDG. 15 - FLOOR 1
SCALE: N.T.S

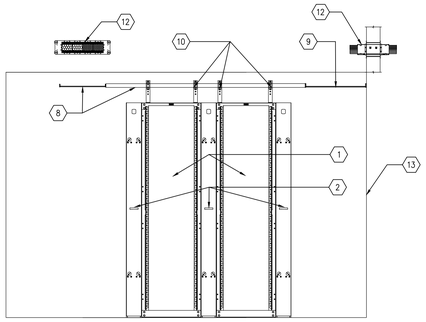

4 WEST WALL ELEVATION - BLDG. 15 - FLOOR 1
SCALE: N.T.S

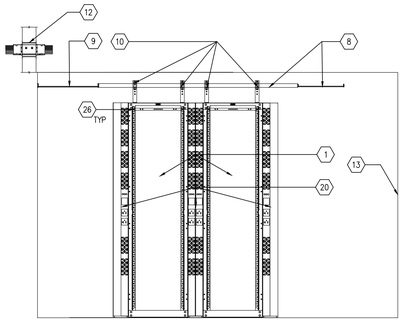

5 EAST WALL ELEVATION - BLDG. 15 - FLOOR 1
SCALE: N.T.S

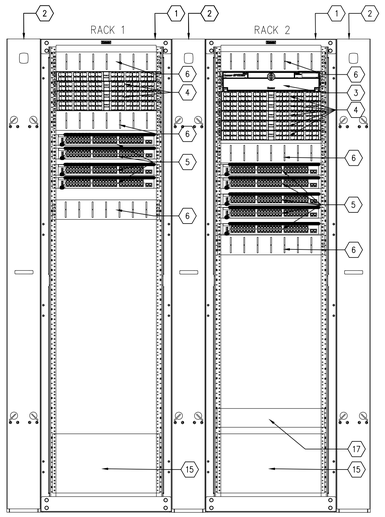

6 RACK ELEVATION - FRONT VIEW - BLDG. 15 - FLOOR 1
SCALE: N.T.S.

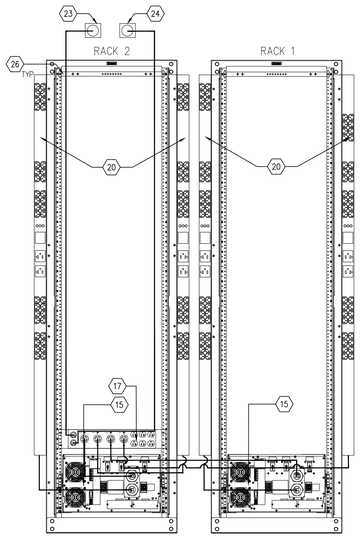

7 RACK ELEVATION - REAR VIEW - BLDG. 15 - FLOOR 1
SCALE: N.T.S.

GENERAL NOTES

1. CONTRACTOR SHALL COORDINATE THE EQUIPMENT'S INSTALLATION AND FINAL LOCATION WITH THE ELECTRICAL AND MECHANICAL DIVISION. REFER TO ELECTRICAL, MECHANICAL AND PLUMBING DRAWINGS.
2. CONTRACTOR SHALL INSTALL PATHWAY DIVIDERS, RADIUS DROP AND ANY OTHER FITTING FOR A PROPER CABLE RUNWAY INSTALLATION.
3. CONTRACTOR SHALL COORDINATE THE EZ-PATH LOCATIONS WITH THE PATHWAY SYSTEM LAYOUT OUTSIDE EACH TELECOM ROOM. REFER TO FLOOR PLAN DRAWINGS.
4. CONTRACTOR SHALL INSTALL BACKBONE RISER SLEEVES OF THE SIZE AS INDICATED ON THE PLANS. REFER TO SECTION 27 15 00 COMMUNICATIONS STRUCTURED CABLING AND SECTION 27 05 33 RACEWAYS AND BOXES FOR COMMUNICATIONS SYSTEMS.
5. CONTRACTOR SHALL X-RAY CONCRETE FLOOR BEFORE CORE DRILLING. CONTRACTOR SHALL COORDINATE WITH THE COR BEFORE BEGINNING DRILLING.
6. CONTRACTOR SHALL FIRESTOP RISER SLEEVES AND EMPTY SPARE RISER SLEEVES. REFER TO SECTION 07 84 00 FIRESTOPPING.
7. CONTRACTOR SHALL INSTALL AN VERTICAL LADDER TYPE CABLE TRAY ON THE WALL ABOVE THE VERTICAL RISER SLEEVES FOR BACKBONE CABLE SUPPORT AS INDICATED ON THE PLANS. THE CABLE TRAY SHALL BE SECURELY ANCHORED TO THE WALL SUFFICIENT TO SUPPORT THE TOTAL WEIGHT OF CABLES AND CABLE TRAY PLUS 50%.
8. CONTRACTOR SHALL INSTALL CABLE SUPPORTS SUFFICIENT TO SUPPORT COMMUNICATIONS CABLES ON THE VERTICAL CABLE TRAY WITHOUT DAMAGING OR DEFORMING THE CABLE.
9. CONTRACTOR SHALL LABEL EACH CABLE AT 42 INCHES A.F.F. ON EACH FLOOR. REFER TO SECTION 27 15 00 COMMUNICATIONS STRUCTURED CABLING.

KEYED NOTES

1. MIGHTY 20 Mo CHANNEL RACK WITH HEXGUARD CABLE PASSAGE, 23.75" X 30" DEEP, 7' HIGH
2. VERTICAL CABLE MANAGER, 6.45" WIDE X 10.26" DEEP.
3. FIBER OPTIC ENCLOSURE WITH DUPLEX-LC, MPO CASSETS
4. ANGLED PATCH PANEL, 48-PORT, 1U, HIGH DENSITY.
5. ETHERNET SWITCH (GFGI)
6. HORIZONTAL CABLE MANAGER, SINGLE SIDED.
7. 12" CABLE WIRE BASKET TRAY
8. 18" CABLE WIRE BASKET TRAY
9. 24" CABLE WIRE BASKET TRAY.
10. WIRE BASKET CABLE TRAY ELEVATION BRACKETS
11. 24-IN. TMGB GROUND BUS BAR
12. PROVIDE FIRE STOPPING DEVICE WITH SPLIT WALL PLATE. EZ PATH SERIES 44+ FIRE RATED PATHWAY OR APPROVED EQUAL.
13. AC GRADE, FIRE RETARDANT PLYWOOD, PAINTED WITH TWO COATS OF HIGH GLOSS, FIRE RETARDANT PAINT APPLIED TO ALL WALLS.
14. ELECTRICAL PANEL BOARDS. REFER TO ELECTRICAL DRAWINGS.
15. RACK-MOUNTED, 5KW, 208V, UPS WITH NEMA 20A, L21-20P INPUT AND L21-20R OUTPUT.
16. WALL MOUNT CABINET, 24"x24"x48", WITH FAN KIT AND TWO SETS OF RAILS, SOLID DOOR. CHATSWORTH 11840-736, FAN KIT 40972-001, 36" CABINET RAILS 12787-524, OR APPROVED EQUAL.
17. 30 A, 208 V, 3-PHASE, ZPDU, (4) NEMA L21-20R, (6) NEMA 5-20 OUTLETS AND 2 x 10' POWER CORDS TERMINATING IN NEMA L21-30P. ZONIT ZPDS-208V30A -L21-4L21-20R-CR OR APPROVED EQUAL
18. SIDE A POWER, REQUIRES A 208V, 60A, THREE-PHASE CIRCUIT TERMINATING IN A HARD-WIRED JUNCTION BOX.
19. SIDE B POWER, REQUIRES A 208V, 60A, THREE-PHASE CIRCUIT TERMINATING IN A HARD-WIRED JUNCTION BOX.
20. VERTICAL RACK PDU, L21-20 PLUG, 3-PHASE WYE, 20A, 208V INPUT, (24) C13 (6) C19 (6) 5-20R OUTLETS, 208V OUTPUT. CHATSWORTH L1-1N0K4 OR APPROVED EQUAL.
21. SIDE-A POWER, L21-20R TWIST-LOCK RECEPTACLE 208V, 20A, 3 PHASE, 8.5 FT AFF, COORDINATE LOCATION WITH CONTRACTOR.
22. SIDE-B POWER, L21-20R TWIST-LOCK RECEPTACLE 208V, 20A, 3-PHASE, 8.5 FT AFF, COORDINATE LOCATION WITH CONTRACTOR.
23. SIDE-A POWER, L21-30R TWIST-LOCK RECEPTACLE 208V, 30A, 3-PHASE, 8.5 FT AFF, COORDINATE LOCATION WITH CONTRACTOR.
24. SIDE-B POWER, L21-30R TWIST-LOCK RECEPTACLE 208V, 30A, 3-PHASE, 8.5 FT AFF, COORDINATE LOCATION WITH CONTRACTOR.
25. 60 A, 208 V, 3-PHASE ZONE PDU BASE UNIT - REAR CIRCUITS WITH SIX NEMA L21-20R OUTPUT RECEPTACLES AND TWO 10' POWER CORDS TERMINATING IN HARD-WIRED JUNCTION BOX. ZONIT ZPDS-208V60A-HW-6L21-2 OR APPROVED EQUAL.
26. TOP-MOUNTED RACK BONDING BUSBAR (RBB)

Revisions:	Date:

CONSULTANT

HFS COMPANY
8718 Botts Lane
San Antonio, Texas 78217
www.hfscompany.com
Phone: (210) 816-4784
Fax: (210) 881-6808
jbianco@hfscompany.com

PROJECT MANAGEMENT

HFS COMPANY
8718 Botts Lane
San Antonio, Texas 78217
www.hfscompany.com
Phone: (210) 816-4784
Fax: (210) 881-6808
jbianco@hfscompany.com

REGISTERED COMMUNICATIONS DISTRIBUTION DESIGNER
Bicsi
Raymond Martinez Jr.
BICSI ID # 143493
EXPIRES 03-31-24
RCDD
21-OCT-22

Construction and Facilities Management

VA U.S. Department of Veterans Affairs

Drawing Title: BLDG. 15 - FIRST FLOOR - TECHNOLOGY TELECOM ROOM PLAN

Approved: Project Director

Phase: 100% CONSTRUCTION DOCUMENTS

FULLY SPRINKLERED

Project Title: CINCINNATI VAMC EHRM INFRASTRUCTURE UPGRADES

Location: 3200 VINE ST., CINCINNATI, OH

Project Number: 539-21-701

Building Number: 15

Drawing Number: TN-479-C.15.1

Issue Date	Checked	Drawn
28-OCT-2022	RMJr	VV

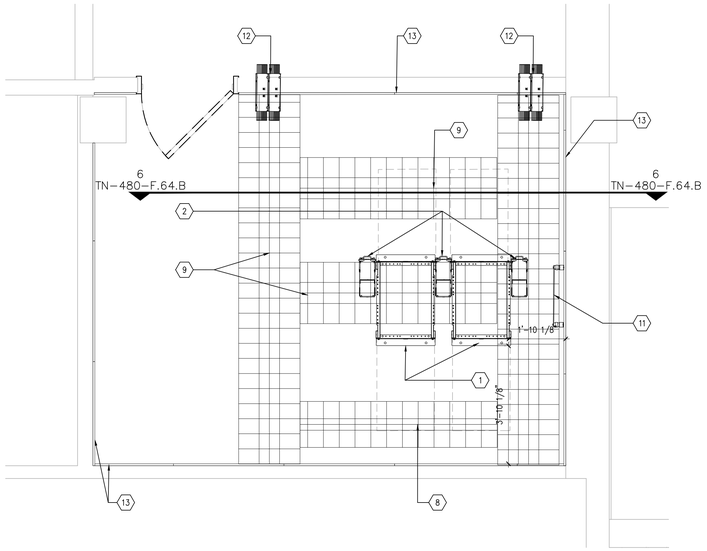

1 TELECOM ROOM LAYOUT - BLDG. 64 - BASEMENT
SCALE: 1/2" = 1'-0"

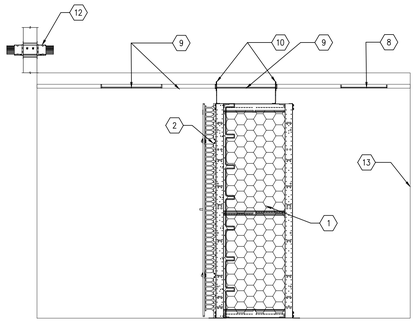

1 WEST WALL ELEVATION - BLDG. 64 - BASEMENT
SCALE: N.T.S

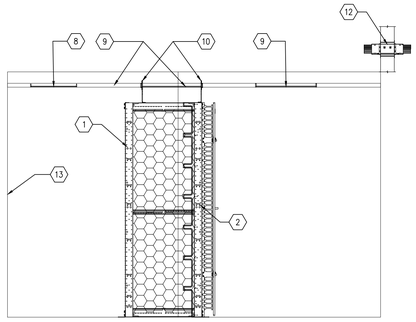

2 EAST WALL ELEVATION - BLDG. 64 - BASEMENT
SCALE: N.T.S

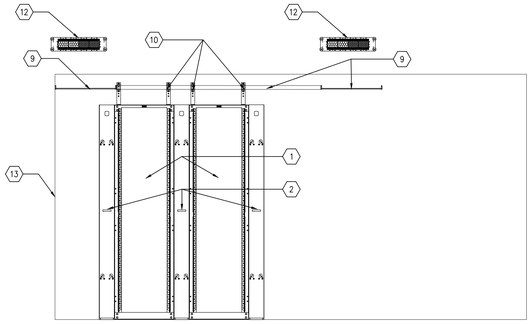

3 NORTH WALL ELEVATION - BLDG. 64 - BASEMENT
SCALE: N.T.S

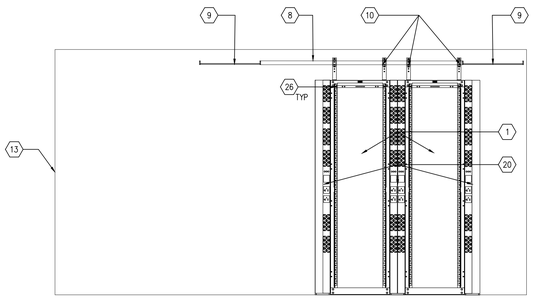

4 SOUTH WALL ELEVATION - BLDG. 64 - BASEMENT
SCALE: N.T.S

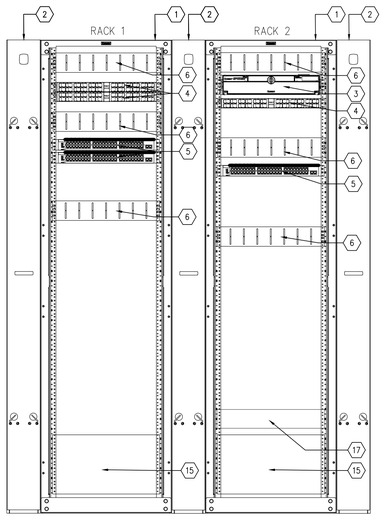

6 RACK ELEVATION - FRONT VIEW - BLDG. 64 - BASEMENT
SCALE: N.T.S.

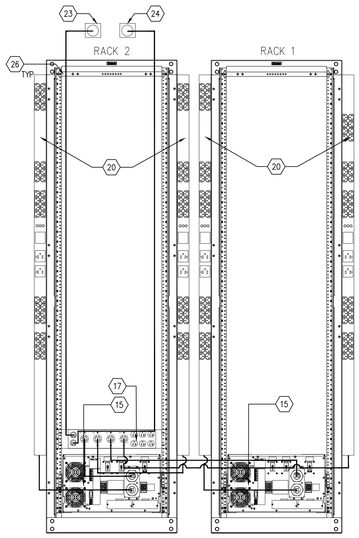

7 RACK ELEVATION - REAR VIEW - BLDG. 64 - BASEMENT
SCALE: N.T.S.

GENERAL NOTES

1. CONTRACTOR SHALL COORDINATE THE EQUIPMENT'S INSTALLATION AND FINAL LOCATION WITH THE ELECTRICAL AND MECHANICAL DIVISION. REFER TO ELECTRICAL, MECHANICAL AND PLUMBING DRAWINGS.
2. CONTRACTOR SHALL INSTALL PATHWAY DIVIDERS, RADIUS DROP AND ANY OTHER FITTING FOR A PROPER CABLE RUNWAY INSTALLATION.
3. CONTRACTOR SHALL COORDINATE THE EZ-PATH LOCATIONS WITH THE PATHWAY SYSTEM LAYOUT OUTSIDE EACH TELECOM ROOM. REFER TO FLOOR PLAN DRAWINGS.
4. CONTRACTOR SHALL INSTALL BACKBONE RISER SLEEVES OF THE SIZE AS INDICATED ON THE PLANS. REFER TO SECTION 27 15 00 COMMUNICATIONS STRUCTURED CABLING AND SECTION 27 05 33 RACEWAYS AND BOXES FOR COMMUNICATIONS SYSTEMS.
5. CONTRACTOR SHALL X-RAY CONCRETE FLOOR BEFORE CORE DRILLING. CONTRACTOR SHALL COORDINATE WITH THE COR BEFORE BEGINNING DRILLING.
6. CONTRACTOR SHALL FIRESTOP RISER SLEEVES AND EMPTY SPARE RISER SLEEVES. REFER TO SECTION 07 84 00 FIRESTOPPING.
7. CONTRACTOR SHALL INSTALL AN VERTICAL LADDER TYPE CABLE TRAY ON THE WALL ABOVE THE VERTICAL RISER SLEEVES FOR BACKBONE CABLE SUPPORT AS INDICATED ON THE PLANS. THE CABLE TRAY SHALL BE SECURELY ANCHORED TO THE WALL SUFFICIENT TO SUPPORT THE TOTAL WEIGHT OF CABLES AND CABLE TRAY PLUS 50%.
8. CONTRACTOR SHALL INSTALL CABLE SUPPORTS SUFFICIENT TO SUPPORT COMMUNICATIONS CABLES ON THE VERTICAL CABLE TRAY WITHOUT DAMAGING OR DEFORMING THE CABLE.
9. CONTRACTOR SHALL LABEL EACH CABLE AT 42 INCHES A.F.F. ON EACH FLOOR. REFER TO SECTION 27 15 00 COMMUNICATIONS STRUCTURED CABLING.

KEYED NOTES

1. MIGHTY 20 Mo CHANNEL RACK WITH HEXGUARD CABLE PASSAGE, 23.75" X 30" DEEP, 7' HIGH
2. VERTICAL CABLE MANAGER, 6.45" WIDE X 10.26" DEEP.
3. FIBER OPTIC ENCLOSURE WITH DUPLEX-LC, MPO CASSETS
4. ANGLED PATCH PANEL, 48-PORT, 1U, HIGH DENSITY.
5. ETHERNET SWITCH (GFGI)
6. HORIZONTAL CABLE MANAGER, SINGLE SIDED.
7. 12" CABLE WIRE BASKET TRAY
8. 18" CABLE WIRE BASKET TRAY
9. 24" CABLE WIRE BASKET TRAY.
10. WIRE BASKET CABLE TRAY ELEVATION BRACKETS
11. 24-IN. TMGB GROUND BUS BAR
12. PROVIDE FIRE STOPPING DEVICE WITH SPLIT WALL PLATE. EZ PATH SERIES 44+ FIRE RATED PATHWAY OR APPROVED EQUAL.
13. AC GRADE, FIRE RETARDANT PLYWOOD, PAINTED WITH TWO COATS OF HIGH GLOSS, FIRE RETARDANT PAINT APPLIED TO ALL WALLS.
14. ELECTRICAL PANEL BOARDS. REFER TO ELECTRICAL DRAWINGS.
15. RACK-MOUNTED, 5KW, 208V, UPS WITH NEMA 20A, L21-20P INPUT AND L21-20R OUTPUT.
16. WALL MOUNT CABINET, 24"x24"x36", WITH FAN KIT AND TWO SETS OF RAILS, SOLID DOOR. CHATSWORTH 11840-736, FAN KIT 40972-001, 36" CABINET RAILS 12787-524, OR APPROVED EQUAL.
17. 30 A, 208 V, 3-PHASE, ZPDU, (4) NEMA L21-20R, (6) NEMA 5-20 OUTLETS AND 2 x 10' POWER CORDS TERMINATING IN NEMA L21-30P. ZONIT ZPDS-208V30A -L21-4L21-20R-CR OR APPROVED EQUAL
18. SIDE A POWER, REQUIRES A 208V, 60A, THREE-PHASE CIRCUIT TERMINATING IN A HARD-WIRED JUNCTION BOX.
19. SIDE B POWER, REQUIRES A 208V, 60A, THREE-PHASE CIRCUIT TERMINATING IN A HARD-WIRED JUNCTION BOX.
20. VERTICAL RACK PDU, L21-20 PLUG, 3-PHASE WYE, 20A, 208V INPUT, (24) C13 (6) C19 (6) 5-20R OUTLETS, 208V OUTPUT. CHATSWORTH L1-1N0K4 OR APPROVED EQUAL.
21. SIDE-A POWER, L21-20R TWIST-LOCK RECEPTACLE 208V, 20A, 3 PHASE, 8.5 FT AFF, COORDINATE LOCATION WITH CONTRACTOR.
22. SIDE-B POWER, L21-20R TWIST-LOCK RECEPTACLE 208V, 20A, 3-PHASE, 8.5 FT AFF, COORDINATE LOCATION WITH CONTRACTOR.
23. SIDE-A POWER, L21-30R TWIST-LOCK RECEPTACLE 208V, 30A, 3-PHASE, 8.5 FT AFF, COORDINATE LOCATION WITH CONTRACTOR.
24. SIDE-B POWER, L21-30R TWIST-LOCK RECEPTACLE 208V, 30A, 3-PHASE, 8.5 FT AFF, COORDINATE LOCATION WITH CONTRACTOR.
25. 60 A, 208 V, 3-PHASE ZONE PDU BASE UNIT - REAR CIRCUITS WITH SIX NEMA L21-20R OUTPUT RECEPTACLES AND TWO 10' POWER CORDS TERMINATING IN HARD-WIRED JUNCTION BOX. ZONIT ZPDS-208V60A-HW-6L21-2 OR APPROVED EQUAL.
26. TOP-MOUNTED RACK BONDING BUSBAR (RBB)

Revisions:	Date:

CONSULTANT

HFS COMPANY
8718 Botts Lane
San Antonio, Texas 78217
www.hfscompany.com
Phone: (210) 816-4784
Fax: (210) 881-6808
jbianco@hfscompany.com

PROJECT MANAGEMENT

HFS COMPANY
8718 Botts Lane
San Antonio, Texas 78217
www.hfscompany.com
Phone: (210) 816-4784
Fax: (210) 881-6808
jbianco@hfscompany.com

REGISTERED COMMUNICATIONS DISTRIBUTION DESIGNER
Bicsi
Raymond Martinez Jr.
BICSI ID # 143493
EXPIRES 12-31-24
RCDD
21-OCT-22

Construction and Facilities Management

VA U.S. Department of Veterans Affairs

Drawing Title: BLDG. 64- BASEMENT - TECHNOLOGY TELECOM ROOM PLAN

Approved: Project Director

Phase: 100% CONSTRUCTION DOCUMENTS

FULLY SPRINKLERED

Project Title: CINCINNATI VAMC EHRM INFRASTRUCTURE UPGRADES

Location: 3200 VINE ST., CINCINNATI, OH

Project Number: 539-21-701

Building Number: 64

Drawing Number: TN-480-F.64.B

Issue Date	Checked	Drawn
18-OCT-2022	RMJr	VV

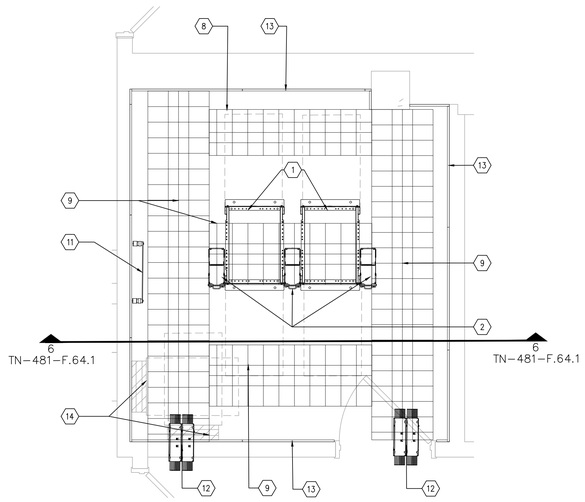

1 TELECOM ROOM LAYOUT - BLDG. 64 - FLOOR 1
SCALE: 1/2" = 1'-0"

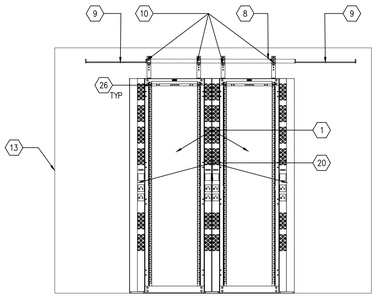

2 NORTH WALL ELEVATION - BLDG. 64 - FLOOR 1
SCALE: N.T.S

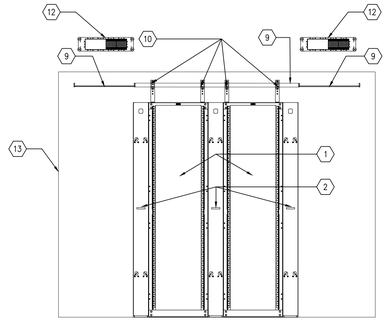

3 SOUTH WALL ELEVATION - BLDG. 64 - FLOOR 1
SCALE: N.T.S

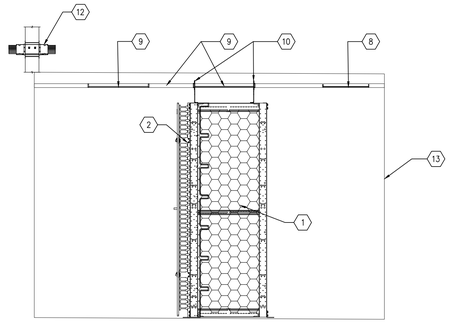

4 EAST WALL ELEVATION - BLDG. 64 - FLOOR 1
SCALE: N.T.S

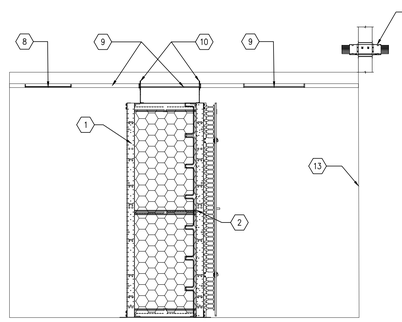

5 WEST WALL ELEVATION - BLDG. 64 - FLOOR 1
SCALE: N.T.S

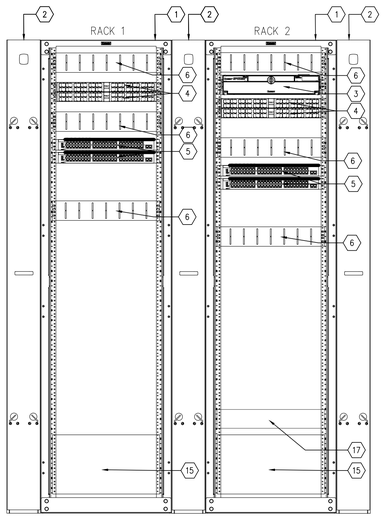

6 RACK ELEVATION - FRONT VIEW - BLDG. 64 - FLOOR 1
SCALE: N.T.S.

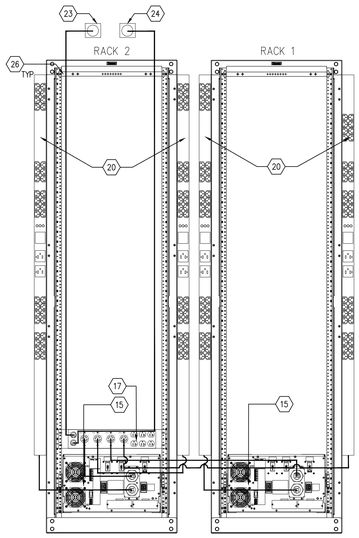

7 RACK ELEVATION - REAR VIEW - BLDG. 64 - FLOOR 1
SCALE: N.T.S.

GENERAL NOTES

1. CONTRACTOR SHALL COORDINATE THE EQUIPMENT'S INSTALLATION AND FINAL LOCATION WITH THE ELECTRICAL AND MECHANICAL DIVISION. REFER TO ELECTRICAL, MECHANICAL AND PLUMBING DRAWINGS.
2. CONTRACTOR SHALL INSTALL PATHWAY DIVIDERS, RADIUS DROP AND ANY OTHER FITTING FOR A PROPER CABLE RUNWAY INSTALLATION.
3. CONTRACTOR SHALL COORDINATE THE EZ-PATH LOCATIONS WITH THE PATHWAY SYSTEM LAYOUT OUTSIDE EACH TELECOM ROOM. REFER TO FLOOR PLAN DRAWINGS.
4. CONTRACTOR SHALL INSTALL BACKBONE RISER SLEEVES OF THE SIZE AS INDICATED ON THE PLANS. REFER TO SECTION 27 15 00 COMMUNICATIONS STRUCTURED CABLING AND SECTION 27 05 33 RACEWAYS AND BOXES FOR COMMUNICATIONS SYSTEMS.
5. CONTRACTOR SHALL X-RAY CONCRETE FLOOR BEFORE CORE DRILLING. CONTRACTOR SHALL COORDINATE WITH THE COR BEFORE BEGINNING DRILLING.
6. CONTRACTOR SHALL FIRESTOP RISER SLEEVES AND EMPTY SPARE RISER SLEEVES. REFER TO SECTION 07 84 00 FIRESTOPPING.
7. CONTRACTOR SHALL INSTALL AN VERTICAL LADDER TYPE CABLE TRAY ON THE WALL ABOVE THE VERTICAL RISER SLEEVES FOR BACKBONE CABLE SUPPORT AS INDICATED ON THE PLANS. THE CABLE TRAY SHALL BE SECURELY ANCHORED TO THE WALL SUFFICIENT TO SUPPORT THE TOTAL WEIGHT OF CABLES AND CABLE TRAY PLUS 50%.
8. CONTRACTOR SHALL INSTALL CABLE SUPPORTS SUFFICIENT TO SUPPORT COMMUNICATIONS CABLES ON THE VERTICAL CABLE TRAY WITHOUT DAMAGING OR DEFORMING THE CABLE.
9. CONTRACTOR SHALL LABEL EACH CABLE AT 42 INCHES A.F.F. ON EACH FLOOR. REFER TO SECTION 27 15 00 COMMUNICATIONS STRUCTURED CABLING.

KEYED NOTES

1. MIGHTY 20 Mo CHANNEL RACK WITH HEXGUARD CABLE PASSAGE, 23.75" X 30" DEEP, 7' HIGH
2. VERTICAL CABLE MANAGER, 6.45" WIDE X 10.26" DEEP.
3. FIBER OPTIC ENCLOSURE WITH DUPLEX-LC, MPO CASSETS
4. ANGLED PATCH PANEL, 48-PORT, 1U, HIGH DENSITY.
5. ETHERNET SWITCH (GFGI)
6. HORIZONTAL CABLE MANAGER, SINGLE SIDED.
7. 12" CABLE WIRE BASKET TRAY
8. 18" CABLE WIRE BASKET TRAY
9. 24" CABLE WIRE BASKET TRAY.
10. WIRE BASKET CABLE TRAY ELEVATION BRACKETS
11. 24-IN. TMGB GROUND BUS BAR
12. PROVIDE FIRE STOPPING DEVICE WITH SPLIT WALL PLATE. EZ PATH SERIES 44+ FIRE RATED PATHWAY OR APPROVED EQUAL.
13. AC GRADE, FIRE RETARDANT PLYWOOD, PAINTED WITH TWO COATS OF HIGH GLOSS, FIRE RETARDANT PAINT APPLIED TO ALL WALLS.
14. ELECTRICAL PANEL BOARDS. REFER TO ELECTRICAL DRAWINGS.
15. RACK-MOUNTED, 5KW, 208V, UPS WITH NEMA 20A, L21-20P INPUT AND L21-20R OUTPUT.
16. WALL MOUNT CABINET, 24"x24"x36", WITH FAN KIT AND TWO SETS OF RAILS, SOLID DOOR. CHATSWORTH 11840-736, FAN KIT 40972-001, 36" CABINET RAILS 12787-524, OR APPROVED EQUAL.
17. 30 A, 208 V, 3-PHASE, ZPDU, (4) NEMA L21-20R, (6) NEMA 5-20 OUTLETS AND 2 x 10' POWER CORDS TERMINATING IN NEMA L21-30P. ZONIT ZPDS-208V30A -L21-4L21-20R-CR OR APPROVED EQUAL
18. SIDE A POWER, REQUIRES A 208V, 60A, THREE-PHASE CIRCUIT TERMINATING IN A HARD-WIRED JUNCTION BOX.
19. SIDE B POWER, REQUIRES A 208V, 60A, THREE-PHASE CIRCUIT TERMINATING IN A HARD-WIRED JUNCTION BOX.
20. VERTICAL RACK PDU, L21-20 PLUG, 3-PHASE WYE, 20A, 208V INPUT, (24) C13 (6) C19 (6) 5-20R OUTLETS, 208V OUTPUT. CHATSWORTH L1-1N0K4 OR APPROVED EQUAL.
21. SIDE-A POWER, L21-20R TWIST-LOCK RECEPTACLE 208V, 20A, 3 PHASE, 8.5 FT AFF, COORDINATE LOCATION WITH CONTRACTOR.
22. SIDE-B POWER, L21-20R TWIST-LOCK RECEPTACLE 208V, 20A, 3-PHASE, 8.5 FT AFF, COORDINATE LOCATION WITH CONTRACTOR.
23. SIDE-A POWER, L21-30R TWIST-LOCK RECEPTACLE 208V, 30A, 3-PHASE, 8.5 FT AFF, COORDINATE LOCATION WITH CONTRACTOR.
24. SIDE-B POWER, L21-30R TWIST-LOCK RECEPTACLE 208V, 30A, 3-PHASE, 8.5 FT AFF, COORDINATE LOCATION WITH CONTRACTOR.
25. 60 A, 208 V, 3-PHASE ZONE PDU BASE UNIT - REAR CIRCUITS WITH SIX NEMA L21-20R OUTPUT RECEPTACLES AND TWO 10' POWER CORDS TERMINATING IN HARD-WIRED JUNCTION BOX. ZONIT ZPDS-208V60A-HW-6L21-2 OR APPROVED EQUAL.
26. TOP-MOUNTED RACK BONDING BUSBAR (RBB)

Revisions:	Date:

CONSULTANT

HFS COMPANY
8718 Botts Lane
San Antonio, Texas 78217
www.hfscompany.com
Phone: (210) 816-4784
Fax: (210) 881-6808
jbianco@hfscompany.com

PROJECT MANAGEMENT

HFS COMPANY
8718 Botts Lane
San Antonio, Texas 78217
www.hfscompany.com
Phone: (210) 816-4784
Fax: (210) 881-6808
jbianco@hfscompany.com

REGISTERED COMMUNICATIONS DISTRIBUTION DESIGNER
Bicsi
Raymond Martinez Jr.
BICSI ID # 143493
EXPIRES 12-31-24
RCDD
21-OCT-22

Construction and Facilities Management

VA U.S. Department of Veterans Affairs

Drawing Title: BLDG. 64- FIRST FLOOR - TECHNOLOGY TELECOM ROOM PLAN

Approved: Project Director

Phase: 100% CONSTRUCTION DOCUMENTS

FULLY SPRINKLERED

Project Title: CINCINNATI VAMC EHRM INFRASTRUCTURE UPGRADES

Location: 3200 VINE ST., CINCINNATI, OH

Project Number: 539-21-701

Building Number: 64

Drawing Number: TN-481-F.64.1

Issue Date	Checked	Drawn
18-OCT-2022	RMJr	VV

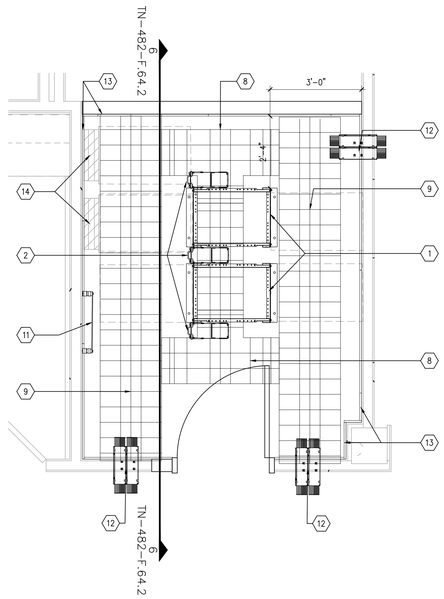

1 TELECOM ROOM LAYOUT - BLDG. 64 - TR 220
SCALE: 1/2" = 1'-0"

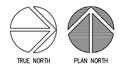

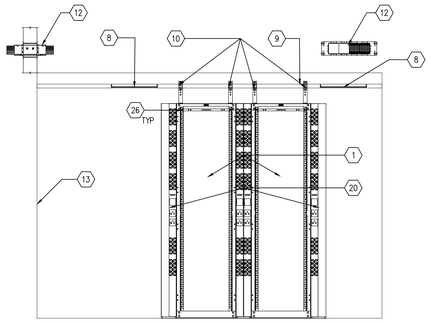

2 EAST WALL ELEVATION - BLDG. 64 - TR 220
SCALE: N.T.S

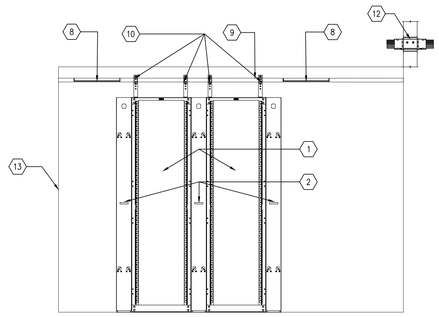

3 WEST WALL ELEVATION - BLDG. 64 - TR 220
SCALE: N.T.S

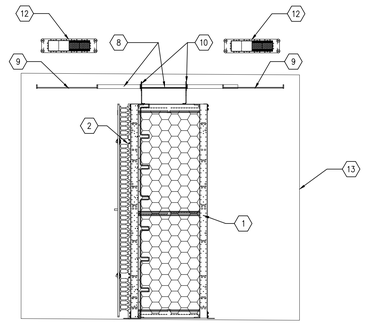

4 SOUTH WALL ELEVATION - BLDG. 64 - TR 220
SCALE: N.T.S

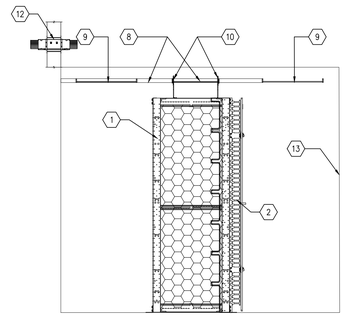

5 NORTH WALL ELEVATION - BLDG. 64 - TR 220
SCALE: N.T.S

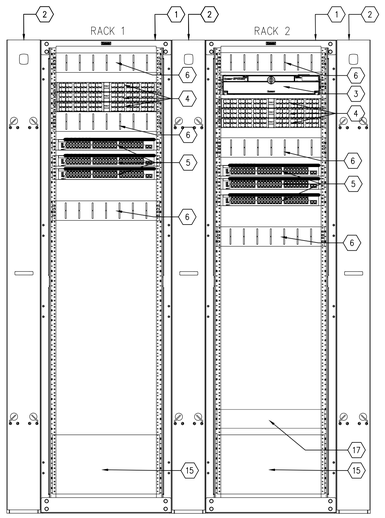

6 RACK ELEVATION - FRONT VIEW - BLDG. 64 - TR 220
SCALE: N.T.S.

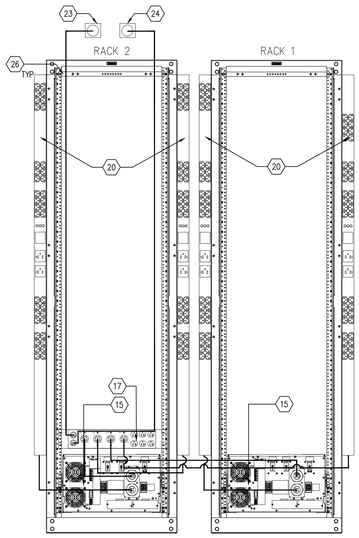

7 RACK ELEVATION - REAR VIEW - BLDG. 64 - TR 220
SCALE: N.T.S.

GENERAL NOTES

1. CONTRACTOR SHALL COORDINATE THE EQUIPMENT'S INSTALLATION AND FINAL LOCATION WITH THE ELECTRICAL AND MECHANICAL DIVISION. REFER TO ELECTRICAL, MECHANICAL AND PLUMBING DRAWINGS.
2. CONTRACTOR SHALL INSTALL PATHWAY DIVIDERS, RADIUS DROP AND ANY OTHER FITTING FOR A PROPER CABLE RUNWAY INSTALLATION.
3. CONTRACTOR SHALL COORDINATE THE EZ-PATH LOCATIONS WITH THE PATHWAY SYSTEM LAYOUT OUTSIDE EACH TELECOM ROOM. REFER TO FLOOR PLAN DRAWINGS.
4. CONTRACTOR SHALL INSTALL BACKBONE RISER SLEEVES OF THE SIZE AS INDICATED ON THE PLANS. REFER TO SECTION 27 15 00 COMMUNICATIONS STRUCTURED CABLING AND SECTION 27 05 33 RACEWAYS AND BOXES FOR COMMUNICATIONS SYSTEMS.
5. CONTRACTOR SHALL X-RAY CONCRETE FLOOR BEFORE CORE DRILLING. CONTRACTOR SHALL COORDINATE WITH THE COR BEFORE BEGINNING DRILLING.
6. CONTRACTOR SHALL FIRESTOP RISER SLEEVES AND EMPTY SPARE RISER SLEEVES. REFER TO SECTION 07 84 00 FIRESTOPPING.
7. CONTRACTOR SHALL INSTALL AN VERTICAL LADDER TYPE CABLE TRAY ON THE WALL ABOVE THE VERTICAL RISER SLEEVES FOR BACKBONE CABLE SUPPORT AS INDICATED ON THE PLANS. THE CABLE TRAY SHALL BE SECURELY ANCHORED TO THE WALL SUFFICIENT TO SUPPORT THE TOTAL WEIGHT OF CABLES AND CABLE TRAY PLUS 50%.
8. CONTRACTOR SHALL INSTALL CABLE SUPPORTS SUFFICIENT TO SUPPORT COMMUNICATIONS CABLES ON THE VERTICAL CABLE TRAY WITHOUT DAMAGING OR DEFORMING THE CABLE.
9. CONTRACTOR SHALL LABEL EACH CABLE AT 42 INCHES A.F.F. ON EACH FLOOR. REFER TO SECTION 27 15 00 COMMUNICATIONS STRUCTURED CABLING.

KEYED NOTES

1. MIGHTY 20 Mo CHANNEL RACK WITH HEXGUARD CABLE PASSAGE, 23.75" X 30" DEEP, 7' HIGH
2. VERTICAL CABLE MANAGER, 6.45" WIDE X 10.26" DEEP.
3. FIBER OPTIC ENCLOSURE WITH DUPLEX-LC, MPO CASSETS
4. ANGLED PATCH PANEL, 48-PORT, 1U, HIGH DENSITY.
5. ETHERNET SWITCH (GFGI)
6. HORIZONTAL CABLE MANAGER, SINGLE SIDED.
7. 12" CABLE WIRE BASKET TRAY
8. 18" CABLE WIRE BASKET TRAY
9. 24" CABLE WIRE BASKET TRAY.
10. WIRE BASKET CABLE TRAY ELEVATION BRACKETS
11. 24-IN. TMGB GROUND BUS BAR
12. PROVIDE FIRE STOPPING DEVICE WITH SPLIT WALL PLATE. EZ PATH SERIES 44+ FIRE RATED PATHWAY OR APPROVED EQUAL.
13. AC GRADE, FIRE RETARDANT PLYWOOD, PAINTED WITH TWO COATS OF HIGH GLOSS, FIRE RETARDANT PAINT APPLIED TO ALL WALLS.
14. ELECTRICAL PANEL BOARDS. REFER TO ELECTRICAL DRAWINGS.
15. RACK-MOUNTED, 5KW, 208V, UPS WITH NEMA 20A, L21-20P INPUT AND L21-20R OUTPUT.
16. WALL MOUNT CABINET, 24"x24"x36", WITH FAN KIT AND TWO SETS OF RAILS, SOLID DOOR. CHATSWORTH 11840-736, FAN KIT 40972-001, 36" CABINET RAILS 12787-524, OR APPROVED EQUAL.
17. 30 A, 208 V, 3-PHASE, ZPDU, (4) NEMA L21-20R, (6) NEMA 5-20 OUTLETS AND 2 x 10' POWER CORDS TERMINATING IN NEMA L21-30P. ZONIT ZPDS-208V30A -L21-4L21-20R-CR OR APPROVED EQUAL
18. SIDE A POWER, REQUIRES A 208V, 60A, THREE-PHASE CIRCUIT TERMINATING IN A HARD-WIRED JUNCTION BOX.
19. SIDE B POWER, REQUIRES A 208V, 60A, THREE-PHASE CIRCUIT TERMINATING IN A HARD-WIRED JUNCTION BOX.
20. VERTICAL RACK PDU, L21-20 PLUG, 3-PHASE WYE, 20A, 208V INPUT, (24) C13 (6) C19 (6) 5-20R OUTLETS, 208V OUTPUT. CHATSWORTH L1-1N0K4 OR APPROVED EQUAL.
21. SIDE-A POWER, L21-20R TWIST-LOCK RECEPTACLE 208V, 20A, 3 PHASE, 8.5 FT AFF, COORDINATE LOCATION WITH CONTRACTOR.
22. SIDE-B POWER, L21-20R TWIST-LOCK RECEPTACLE 208V, 20A, 3-PHASE, 8.5 FT AFF, COORDINATE LOCATION WITH CONTRACTOR.
23. SIDE-A POWER, L21-30R TWIST-LOCK RECEPTACLE 208V, 30A, 3-PHASE, 8.5 FT AFF, COORDINATE LOCATION WITH CONTRACTOR.
24. SIDE-B POWER, L21-30R TWIST-LOCK RECEPTACLE 208V, 30A, 3-PHASE, 8.5 FT AFF, COORDINATE LOCATION WITH CONTRACTOR.
25. 60 A, 208 V, 3-PHASE ZONE PDU BASE UNIT - REAR CIRCUITS WITH SIX NEMA L21-20R OUTPUT RECEPTACLES AND TWO 10' POWER CORDS TERMINATING IN HARD-WIRED JUNCTION BOX. ZONIT ZPDS-208V60A-HW-6L21-2 OR APPROVED EQUAL.
26. TOP-MOUNTED RACK BONDING BUSBAR (RBB)

Revisions:	Date:

CONSULTANT
HFS COMPANY
8718 Botts Lane
San Antonio, Texas 78217
www.hfscompany.com
Phone: (210) 816-4784
Fax: (210) 881-6808
jbianco@hfscompany.com

PROJECT MANAGEMENT
HFS COMPANY
8718 Botts Lane
San Antonio, Texas 78217
www.hfscompany.com
Phone: (210) 816-4784
Fax: (210) 881-6808
jbianco@hfscompany.com

REGISTERED COMMUNICATIONS DISTRIBUTION DESIGNER
Bicsi
Raymond Martinez Jr.
BICSI ID # 143493
EXPIRES 12-31-24
RCDD
21-OCT-22

Construction and Facilities Management

VA U.S. Department of Veterans Affairs

Drawing Title: BLDG. 64 - FIRST FLOOR - TECHNOLOGY TELECOM ROOM PLAN

Approved: Project Director

Phase: 100% CONSTRUCTION DOCUMENTS

FULLY SPRINKLERED

Project Title: CINCINNATI VAMC EHRM INFRASTRUCTURE UPGRADES

Location: 3200 VINE ST., CINCINNATI, OH

Project Number: 539-21-701

Building Number: 64

Drawing Number: TN-482-F.64.2

Issue Date	Checked	Drawn
18-OCT-2022	RMJr	VV

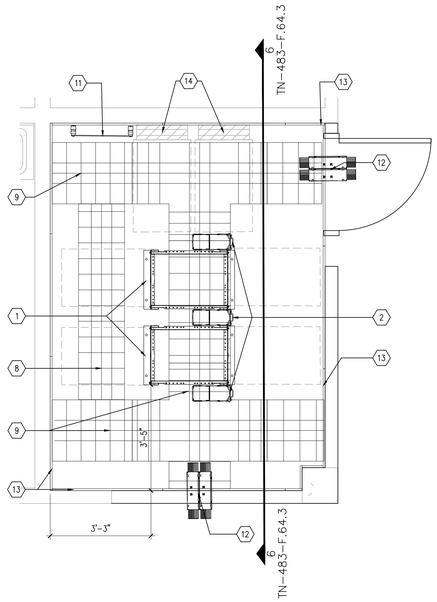

1 TELECOM ROOM LAYOUT - BLDG. 64 - FLOOR 3
SCALE: 1/2" = 1'-0"

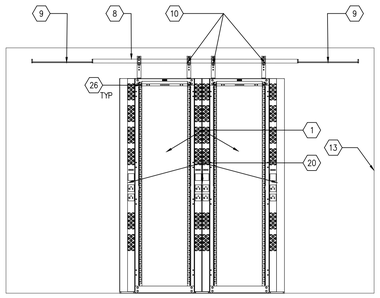

2 WEST WALL ELEVATION - BLDG. 64 - FLOOR 3
SCALE: N.T.S

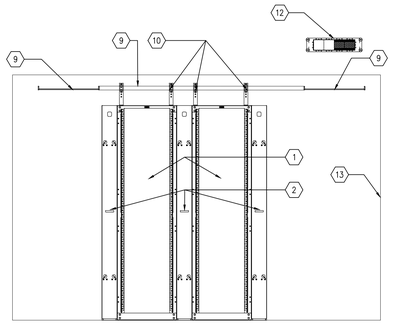

3 EAST WALL ELEVATION - BLDG. 64 - FLOOR 3
SCALE: N.T.S

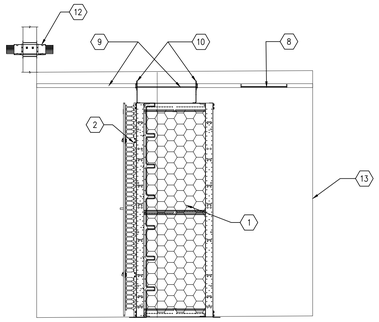

4 NORTH WALL ELEVATION - BLDG. 64 - FLOOR 3
SCALE: N.T.S

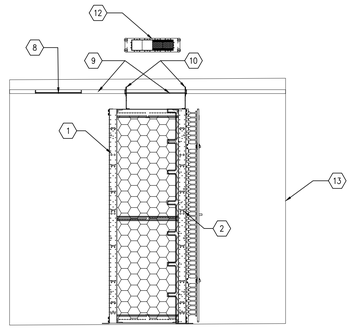

5 SOUTH WALL ELEVATION - BLDG. 64 - FLOOR 3
SCALE: N.T.S

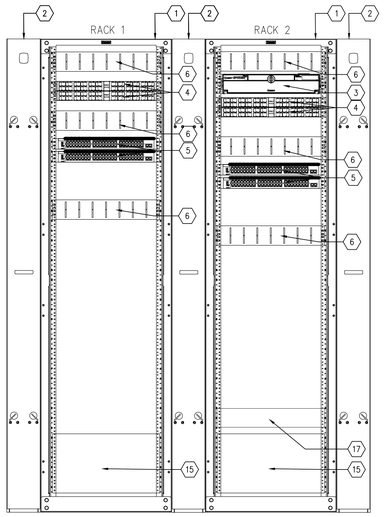

6 RACK ELEVATION - FRONT VIEW - BLDG. 64 - FLOOR 3
SCALE: N.T.S.

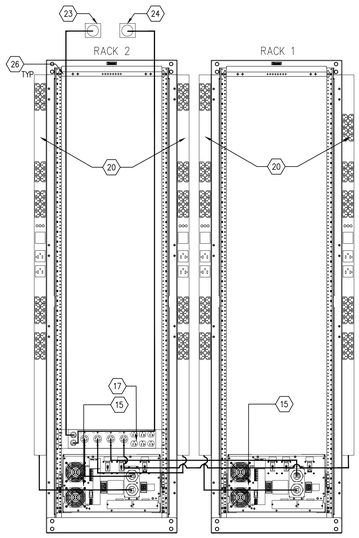

7 RACK ELEVATION - REAR VIEW - BLDG. 64 - FLOOR 3
SCALE: N.T.S.

GENERAL NOTES

1. CONTRACTOR SHALL COORDINATE THE EQUIPMENT'S INSTALLATION AND FINAL LOCATION WITH THE ELECTRICAL AND MECHANICAL DIVISION. REFER TO ELECTRICAL, MECHANICAL AND PLUMBING DRAWINGS.
2. CONTRACTOR SHALL INSTALL PATHWAY DIVIDERS, RADIUS DROP AND ANY OTHER FITTING FOR A PROPER CABLE RUNWAY INSTALLATION.
3. CONTRACTOR SHALL COORDINATE THE EZ-PATH LOCATIONS WITH THE PATHWAY SYSTEM LAYOUT OUTSIDE EACH TELECOM ROOM. REFER TO FLOOR PLAN DRAWINGS.
4. CONTRACTOR SHALL INSTALL BACKBONE RISER SLEEVES OF THE SIZE AS INDICATED ON THE PLANS. REFER TO SECTION 27 15 00 COMMUNICATIONS STRUCTURED CABLING AND SECTION 27 05 33 RACEWAYS AND BOXES FOR COMMUNICATIONS SYSTEMS.
5. CONTRACTOR SHALL X-RAY CONCRETE FLOOR BEFORE CORE DRILLING. CONTRACTOR SHALL COORDINATE WITH THE COR BEFORE BEGINNING DRILLING.
6. CONTRACTOR SHALL FIRESTOP RISER SLEEVES AND EMPTY SPARE RISER SLEEVES. REFER TO SECTION 07 84 00 FIRESTOPPING.
7. CONTRACTOR SHALL INSTALL AN VERTICAL LADDER TYPE CABLE TRAY ON THE WALL ABOVE THE VERTICAL RISER SLEEVES FOR BACKBONE CABLE SUPPORT AS INDICATED ON THE PLANS. THE CABLE TRAY SHALL BE SECURELY ANCHORED TO THE WALL SUFFICIENT TO SUPPORT THE TOTAL WEIGHT OF CABLES AND CABLE TRAY PLUS 50%.
8. CONTRACTOR SHALL INSTALL CABLE SUPPORTS SUFFICIENT TO SUPPORT COMMUNICATIONS CABLES ON THE VERTICAL CABLE TRAY WITHOUT DAMAGING OR DEFORMING THE CABLE.
9. CONTRACTOR SHALL LABEL EACH CABLE AT 42 INCHES A.F.F. ON EACH FLOOR. REFER TO SECTION 27 15 00 COMMUNICATIONS STRUCTURED CABLING.

KEYED NOTES

1. MIGHTY 20 Mo CHANNEL RACK WITH HEXGUARD CABLE PASSAGE, 23.75" X 30" DEEP, 7' HIGH
2. VERTICAL CABLE MANAGER, 6.45" WIDE X 10.26" DEEP.
3. FIBER OPTIC ENCLOSURE WITH DUPLEX-LC, MPO CASSETS
4. ANGLED PATCH PANEL, 48-PORT, 1U, HIGH DENSITY.
5. ETHERNET SWITCH (GFGI)
6. HORIZONTAL CABLE MANAGER, SINGLE SIDED.
7. 12" CABLE WIRE BASKET TRAY
8. 18" CABLE WIRE BASKET TRAY
9. 24" CABLE WIRE BASKET TRAY.
10. WIRE BASKET CABLE TRAY ELEVATION BRACKETS
11. 24-IN. TMGB GROUND BUS BAR
12. PROVIDE FIRE STOPPING DEVICE WITH SPLIT WALL PLATE. EZ PATH SERIES 44+ FIRE RATED PATHWAY OR APPROVED EQUAL.
13. AC GRADE, FIRE RETARDANT PLYWOOD, PAINTED WITH TWO COATS OF HIGH GLOSS, FIRE RETARDANT PAINT APPLIED TO ALL WALLS.
14. ELECTRICAL PANEL BOARDS. REFER TO ELECTRICAL DRAWINGS.
15. RACK-MOUNTED, 5KW, 208V, UPS WITH NEMA 20A, L21-20P INPUT AND L21-20R OUTPUT.
16. WALL MOUNT CABINET, 24"x24"x36", WITH FAN KIT AND TWO SETS OF RAILS, SOLID DOOR. CHATSWORTH 11840-736, FAN KIT 40972-001, 36" CABINET RAILS 12787-524, OR APPROVED EQUAL.
17. 30 A, 208 V, 3-PHASE, ZPDU, (4) NEMA L21-20R, (6) NEMA 5-20 OUTLETS AND 2 x 10' POWER CORDS TERMINATING IN NEMA L21-30P. ZONIT ZPDS-208V30A -L21-4L21-20R-CR OR APPROVED EQUAL
18. SIDE A POWER, REQUIRES A 208V, 60A, THREE-PHASE CIRCUIT TERMINATING IN A HARD-WIRED JUNCTION BOX.
19. SIDE B POWER, REQUIRES A 208V, 60A, THREE-PHASE CIRCUIT TERMINATING IN A HARD-WIRED JUNCTION BOX.
20. VERTICAL RACK PDU, L21-20 PLUG, 3-PHASE WYE, 20A, 208V INPUT, (24) C13 (6) C19 (6) 5-20R OUTLETS, 208V OUTPUT. CHATSWORTH L1-1N0K4 OR APPROVED EQUAL.
21. SIDE-A POWER, L21-20R TWIST-LOCK RECEPTACLE 208V, 20A, 3 PHASE, 8.5 FT AFF, COORDINATE LOCATION WITH CONTRACTOR.
22. SIDE-B POWER, L21-20R TWIST-LOCK RECEPTACLE 208V, 20A, 3-PHASE, 8.5 FT AFF, COORDINATE LOCATION WITH CONTRACTOR.
23. SIDE-A POWER, L21-30R TWIST-LOCK RECEPTACLE 208V, 30A, 3-PHASE, 8.5 FT AFF, COORDINATE LOCATION WITH CONTRACTOR.
24. SIDE-B POWER, L21-30R TWIST-LOCK RECEPTACLE 208V, 30A, 3-PHASE, 8.5 FT AFF, COORDINATE LOCATION WITH CONTRACTOR.
25. 60 A, 208 V, 3-PHASE ZONE PDU BASE UNIT - REAR CIRCUITS WITH SIX NEMA L21-20R OUTPUT RECEPTACLES AND TWO 10' POWER CORDS TERMINATING IN HARD-WIRED JUNCTION BOX. ZONIT ZPDS-208V60A-HW-6L21-2 OR APPROVED EQUAL.
26. TOP-MOUNTED RACK BONDING BUSBAR (RBB)

Revisions:	Date:

CONSULTANT

HFS COMPANY
8718 Botts Lane
San Antonio, Texas 78217
www.hfscompany.com
Phone: (210) 816-4784
Fax: (210) 881-6808
jbianco@hfscompany.com

PROJECT MANAGEMENT

HFS COMPANY
8718 Botts Lane
San Antonio, Texas 78217
www.hfscompany.com
Phone: (210) 816-4784
Fax: (210) 881-6808
jbianco@hfscompany.com

REGISTERED COMMUNICATIONS DISTRIBUTION DESIGNER
BICSI
Raymond Martinez Jr.
BICSI ID # 143493
EXPIRES 12-31-24
RCDD
21-OCT-22

Construction and Facilities Management

VA U.S. Department of Veterans Affairs

Drawing Title: BLDG. 64 - THIRD FLOOR - TECHNOLOGY TELECOM ROOM PLAN

Approved: Project Director

Phase: 100% CONSTRUCTION DOCUMENTS

FULLY SPRINKLERED

Project Title: CINCINNATI VAMC EHRM INFRASTRUCTURE UPGRADES

Location: 3200 VINE ST., CINCINNATI, OH

Issue Date: 18-OCT-2022
Checked: RMJr
Drawn: VV

Project Number: 539-21-701
Building Number: 64
Drawing Number: TN-483-F.64.3

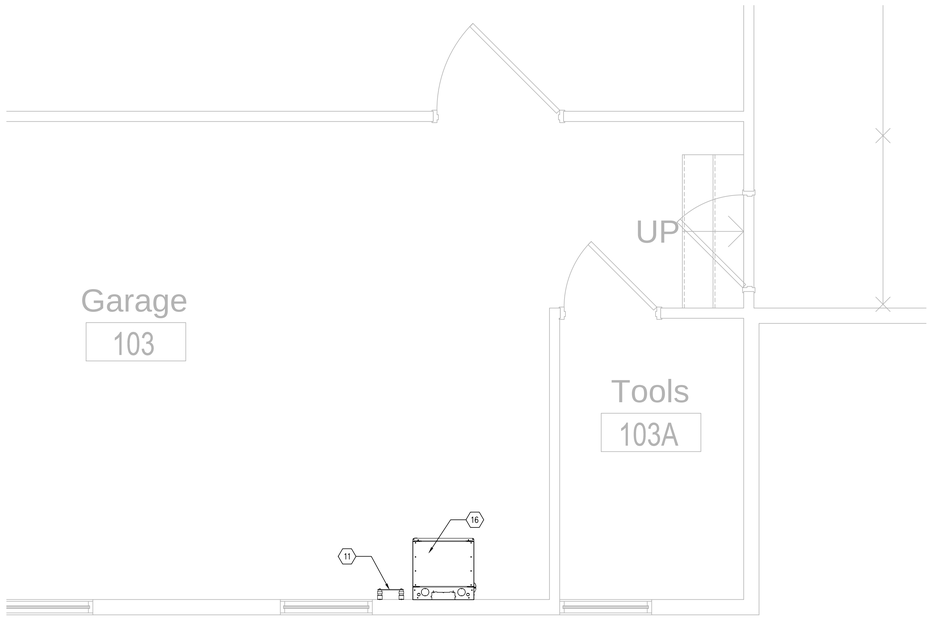

1 BLDG. 117 FIRST FLOOR TELECOM ROOM LAYOUT
SCALE: 1/2" = 1'-0"

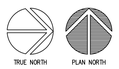

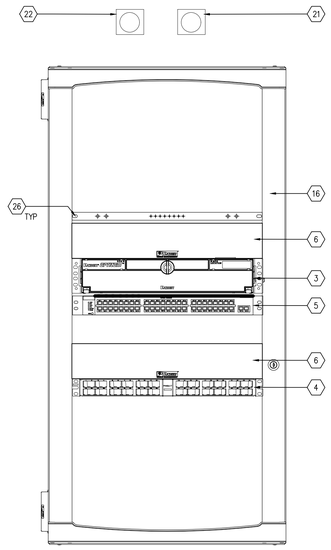

2 BLDG. 117 TR WALL MOUNT RACK ELEVATION
SCALE: N.T.S.

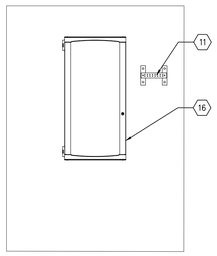

3 BLDG. 117 FIRST FLOOR NORTH WALL ELEVATION
SCALE: 1/2" = 1'-0"

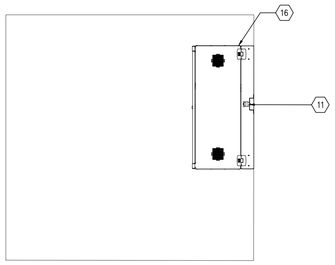

4 BLDG. 117 FIRST FLOOR WEST WALL ELEVATION
SCALE: 1/2" = 1'-0"

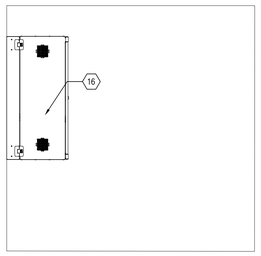

5 BLDG. 117 FIRST FLOOR EAST WALL ELEVATION
SCALE: 1/2" = 1'-0"

GENERAL NOTES

1. CONTRACTOR SHALL COORDINATE THE EQUIPMENT'S INSTALLATION AND FINAL LOCATION WITH THE ELECTRICAL AND MECHANICAL DIVISION. REFER TO ELECTRICAL, MECHANICAL AND PLUMBING DRAWINGS.
2. CONTRACTOR SHALL INSTALL PATHWAY DIVIDERS, RADIUS DROP AND ANY OTHER FITTING FOR A PROPER CABLE RUNWAY INSTALLATION.
3. CONTRACTOR SHALL COORDINATE THE EZ-PATH LOCATIONS WITH THE PATHWAY SYSTEM LAYOUT OUTSIDE EACH TELECOM ROOM. REFER TO FLOOR PLAN DRAWINGS.
4. CONTRACTOR SHALL INSTALL BACKBONE RISER SLEEVES OF THE SIZE AS INDICATED ON THE PLANS. REFER TO SECTION 27 15 00 COMMUNICATIONS STRUCTURED CABLING AND SECTION 27 05 33 RACEWAYS AND BOXES FOR COMMUNICATIONS SYSTEMS.
5. CONTRACTOR SHALL X-RAY CONCRETE FLOOR BEFORE CORE DRILLING. CONTRACTOR SHALL COORDINATE WITH THE COR BEFORE BEGINNING DRILLING.
6. CONTRACTOR SHALL FIRESTOP RISER SLEEVES AND EMPTY SPARE RISER SLEEVES. REFER TO SECTION 07 84 00 FIRESTOPPING.
7. CONTRACTOR SHALL INSTALL AN VERTICAL LADDER TYPE CABLE TRAY ON THE WALL ABOVE THE VERTICAL RISER SLEEVES FOR BACKBONE CABLE SUPPORT AS INDICATED ON THE PLANS. THE CABLE TRAY SHALL BE SECURELY ANCHORED TO THE WALL SUFFICIENT TO SUPPORT THE TOTAL WEIGHT OF CABLES AND CABLE TRAY PLUS 50%.
8. CONTRACTOR SHALL INSTALL CABLE SUPPORTS SUFFICIENT TO SUPPORT COMMUNICATIONS CABLES ON THE VERTICAL CABLE TRAY WITHOUT DAMAGING OR DEFORMING THE CABLE.
9. CONTRACTOR SHALL LABEL EACH CABLE AT 42 INCHES A.F.F. ON EACH FLOOR. REFER TO SECTION 27 15 00 COMMUNICATIONS STRUCTURED CABLING.

KEYED NOTES

1. MIGHTY 20 Mo CHANNEL RACK WITH HEXGUARD CABLE PASSAGE, 23.75" X 30" DEEP, 7' HIGH
2. VERTICAL CABLE MANAGER, 6.45" WIDE X 10.26" DEEP.
3. FIBER OPTIC ENCLOSURE WITH DUPLEX-LC, MPO CASSETS
4. ANGLED PATCH PANEL, 48-PORT, 1U, HIGH DENSITY.
5. ETHERNET SWITCH (GFGI)
6. HORIZONTAL CABLE MANAGER, SINGLE SIDED.
7. 12" CABLE WIRE BASKET TRAY
8. 18" CABLE WIRE BASKET TRAY
9. 24" CABLE WIRE BASKET TRAY.
10. WIRE BASKET CABLE TRAY ELEVATION BRACKETS
11. 24-IN. TMGB GROUND BUS BAR
12. PROVIDE FIRE STOPPING DEVICE WITH SPLIT WALL PLATE. EZ PATH SERIES 44+ FIRE RATED PATHWAY OR APPROVED EQUAL.
13. AC GRADE, FIRE RETARDANT PLYWOOD, PAINTED WITH TWO COATS OF HIGH GLOSS, FIRE RETARDANT PAINT APPLIED TO ALL WALLS.
14. ELECTRICAL PANEL BOARDS. REFER TO ELECTRICAL DRAWINGS.
15. RACK-MOUNTED, 5KW, 208V, UPS WITH NEMA 20A, L21-20P INPUT AND L21-20R OUTPUT.
16. WALL MOUNT CABINET, 24"x24"x48", WITH FAN KIT AND TWO SETS OF RAILS, SOLID DOOR. CHATSWORTH 11840-736, FAN KIT 40972-001, 36" CABINET RAILS 12787-524, OR APPROVED EQUAL.
17. 30 A, 208 V, 3-PHASE, ZPDU, (4) NEMA L21-20R, (6) NEMA 5-20 OUTLETS AND 2 x 10' POWER CORDS TERMINATING IN NEMA L21-30P. ZONIT ZPDS-208V30A -L21-4L21-20R-CR OR APPROVED EQUAL
18. SIDE A POWER, REQUIRES A 208V, 60A, THREE-PHASE CIRCUIT TERMINATING IN A HARD-WIRED JUNCTION BOX.
19. SIDE B POWER, REQUIRES A 208V, 60A, THREE-PHASE CIRCUIT TERMINATING IN A HARD-WIRED JUNCTION BOX.
20. VERTICAL RACK PDU, L21-20 PLUG, 3-PHASE WYE, 20A, 208V INPUT, (24) C13 (6) C19 (6) 5-20R OUTLETS, 208V OUTPUT. CHATSWORTH L1-1N0K4 OR APPROVED EQUAL.
21. SIDE-A POWER, L21-20R TWIST-LOCK RECEPTACLE 208V, 20A, 3 PHASE, 8.5 FT AFF, COORDINATE LOCATION WITH CONTRACTOR.
22. SIDE-B POWER, L21-20R TWIST-LOCK RECEPTACLE 208V, 20A, 3-PHASE, 8.5 FT AFF, COORDINATE LOCATION WITH CONTRACTOR.
23. SIDE-A POWER, L21-30R TWIST-LOCK RECEPTACLE 208V, 30A, 3-PHASE, 8.5 FT AFF, COORDINATE LOCATION WITH CONTRACTOR.
24. SIDE-B POWER, L21-30R TWIST-LOCK RECEPTACLE 208V, 30A, 3-PHASE, 8.5 FT AFF, COORDINATE LOCATION WITH CONTRACTOR.
25. 60 A, 208 V, 3-PHASE ZONE PDU BASE UNIT - REAR CIRCUITS WITH SIX NEMA L21-20R OUTPUT RECEPTACLES AND TWO 10' POWER CORDS TERMINATING IN HARD-WIRED JUNCTION BOX. ZONIT ZPDS-208V60A-HW-6L21-2 OR APPROVED EQUAL.
26. TOP-MOUNTED RACK BONDING BUSBAR (RBB)

Revisions:	Date:

CONSULTANT

HFS COMPANY
8718 Botts Lane
San Antonio, Texas 78217
www.hfscompany.com
Phone: (210) 816-4784
Fax: (210) 881-6808
jbianco@hfscompany.com

PROJECT MANAGEMENT

HFS COMPANY
8718 Botts Lane
San Antonio, Texas 78217
www.hfscompany.com
Phone: (210) 816-4784
Fax: (210) 881-6808
jbianco@hfscompany.com

REGISTERED COMMUNICATIONS DISTRIBUTION DESIGNER
Bicsi
Raymond Martinez Jr.
BICSI ID # 143493
EXPIRES 12-31-24
RCDD
21-OCT-22

Construction and Facilities Management

VA U.S. Department of Veterans Affairs

Drawing Title: BLDG. 117 - FIRST FLOOR - TECHNOLOGY TELECOM ROOM PLAN

Approved: Project Director

Phase: 100% CONSTRUCTION DOCUMENTS

FULLY SPRINKLERED

Project Title: CINCINNATI VAMC EHRM INFRASTRUCTURE UPGRADES

Location: 3200 VINE ST., CINCINNATI, OH

Issue Date: 18-OCT-2022
Checked: RMJr
Drawn: VV

Project Number: 539-21-701
Building Number: 117
Drawing Number: TN-484-F.117.1

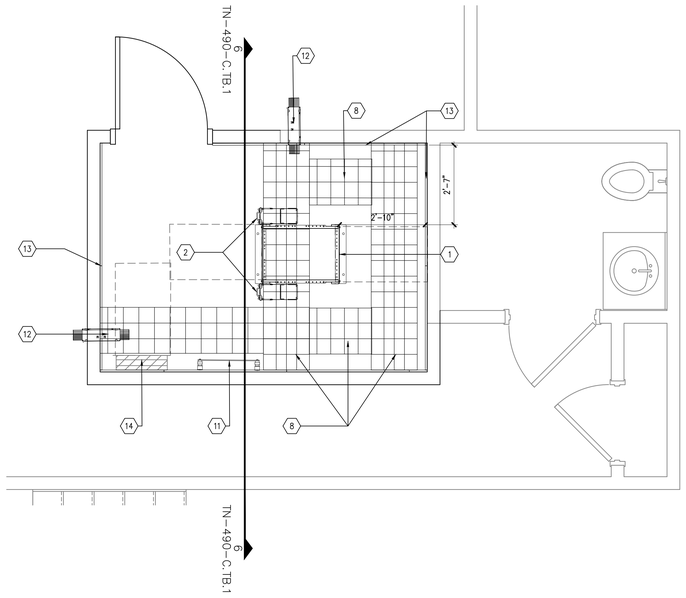

1 TELECOM ROOM LAYOUT - BLDG. TB - FLOOR 1
SCALE: 1/2" = 1'-0"

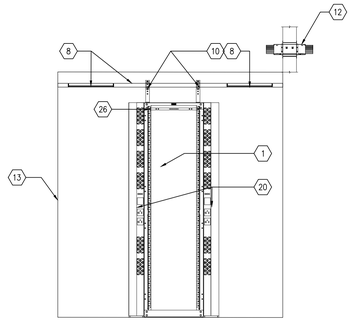

2 EAST WALL ELEVATION - BLDG. TB - FLOOR 1
SCALE: N.T.S

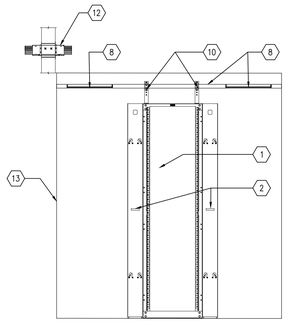

3 WEST WALL ELEVATION - BLDG. TB - FLOOR 1
SCALE: N.T.S

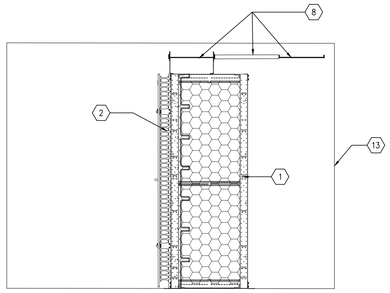

4 SOUTH WALL ELEVATION - BLDG. TB - FLOOR 1
SCALE: N.T.S

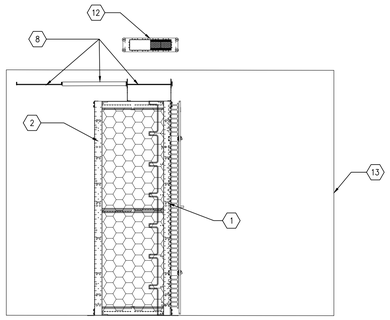

5 NORTH WALL ELEVATION - BLDG. TB - FLOOR 1
SCALE: N.T.S

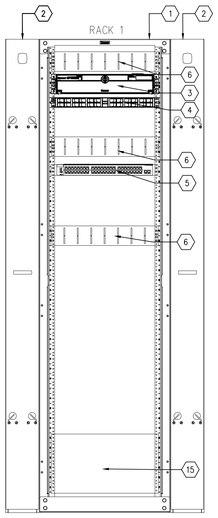

6 RACK ELEVATION - FRONT VIEW - BLDG. TB - FLOOR 1
SCALE: N.T.S.

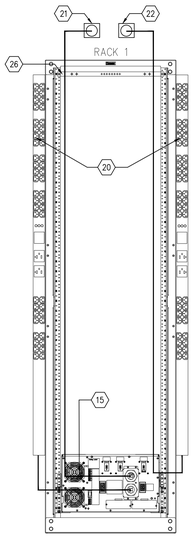

7 RACK ELEVATION - REAR VIEW - BLDG. TB - FLOOR 1
SCALE: N.T.S.

GENERAL NOTES

1. CONTRACTOR SHALL COORDINATE THE EQUIPMENT'S INSTALLATION AND FINAL LOCATION WITH THE ELECTRICAL AND MECHANICAL DIVISION. REFER TO ELECTRICAL, MECHANICAL AND PLUMBING DRAWINGS.
2. CONTRACTOR SHALL INSTALL PATHWAY DIVIDERS, RADIUS DROP AND ANY OTHER FITTING FOR A PROPER CABLE RUNWAY INSTALLATION.
3. CONTRACTOR SHALL COORDINATE THE EZ-PATH LOCATIONS WITH THE PATHWAY SYSTEM LAYOUT OUTSIDE EACH TELECOM ROOM. REFER TO FLOOR PLAN DRAWINGS.
4. CONTRACTOR SHALL INSTALL BACKBONE RISER SLEEVES OF THE SIZE AS INDICATED ON THE PLANS. REFER TO SECTION 27 15 00 COMMUNICATIONS STRUCTURED CABLING AND SECTION 27 05 33 RACEWAYS AND BOXES FOR COMMUNICATIONS SYSTEMS.
5. CONTRACTOR SHALL X-RAY CONCRETE FLOOR BEFORE CORE DRILLING. CONTRACTOR SHALL COORDINATE WITH THE COR BEFORE BEGINNING DRILLING.
6. CONTRACTOR SHALL FIRESTOP RISER SLEEVES AND EMPTY SPARE RISER SLEEVES. REFER TO SECTION 07 84 00 FIRESTOPPING.
7. CONTRACTOR SHALL INSTALL AN VERTICAL LADDER TYPE CABLE TRAY ON THE WALL ABOVE THE VERTICAL RISER SLEEVES FOR BACKBONE CABLE SUPPORT AS INDICATED ON THE PLANS. THE CABLE TRAY SHALL BE SECURELY ANCHORED TO THE WALL SUFFICIENT TO SUPPORT THE TOTAL WEIGHT OF CABLES AND CABLE TRAY PLUS 50%.
8. CONTRACTOR SHALL INSTALL CABLE SUPPORTS SUFFICIENT TO SUPPORT COMMUNICATIONS CABLES ON THE VERTICAL CABLE TRAY WITHOUT DAMAGING OR DEFORMING THE CABLE.
9. CONTRACTOR SHALL LABEL EACH CABLE AT 42 INCHES A.F.F. ON EACH FLOOR. REFER TO SECTION 27 15 00 COMMUNICATIONS STRUCTURED CABLING.

KEYED NOTES

1. MIGHTY 20 Mo CHANNEL RACK WITH HEXGUARD CABLE PASSAGE, 23.75" X 30" DEEP, 7' HIGH
2. VERTICAL CABLE MANAGER, 6.45" WIDE X 10.26" DEEP.
3. FIBER OPTIC ENCLOSURE WITH DUPLEX-LC, MPO CASSETS
4. ANGLED PATCH PANEL, 48-PORT, 1U, HIGH DENSITY.
5. ETHERNET SWITCH (GFGI)
6. HORIZONTAL CABLE MANAGER, SINGLE SIDED.
7. 12" CABLE WIRE BASKET TRAY
8. 18" CABLE WIRE BASKET TRAY
9. 24" CABLE WIRE BASKET TRAY.
10. WIRE BASKET CABLE TRAY ELEVATION BRACKETS
11. 24-IN. TMGB GROUND BUS BAR
12. PROVIDE FIRE STOPPING DEVICE WITH SPLIT WALL PLATE. EZ PATH SERIES 44+ FIRE RATED PATHWAY OR APPROVED EQUAL.
13. AC GRADE, FIRE RETARDANT PLYWOOD, PAINTED WITH TWO COATS OF HIGH GLOSS, FIRE RETARDANT PAINT APPLIED TO ALL WALLS.
14. ELECTRICAL PANEL BOARDS. REFER TO ELECTRICAL DRAWINGS.
15. RACK-MOUNTED, 5KW, 208V, UPS WITH NEMA 20A, L21-20P INPUT AND L21-20R OUTPUT.
16. WALL MOUNT CABINET, 24"x24"x48", WITH FAN KIT AND TWO SETS OF RAILS, SOLID DOOR. CHATSWORTH 11840-736, FAN KIT 40972-001, 36" CABINET RAILS 12787-524, OR APPROVED EQUAL.
17. 30 A, 208 V, 3-PHASE, ZPDU, (4) NEMA L21-20R, (6) NEMA 5-20 OUTLETS AND 2 x 10' POWER CORDS TERMINATING IN NEMA L21-30P. ZONIT ZPDS-208V30A -L21-4L21-20R-CR OR APPROVED EQUAL
18. SIDE A POWER, REQUIRES A 208V, 60A, THREE-PHASE CIRCUIT TERMINATING IN A HARD-WIRED JUNCTION BOX.
19. SIDE B POWER, REQUIRES A 208V, 60A, THREE-PHASE CIRCUIT TERMINATING IN A HARD-WIRED JUNCTION BOX.
20. VERTICAL RACK PDU, L21-20 PLUG, 3-PHASE WYE, 20A, 208V INPUT, (24) C13 (6) C19 (6) 5-20R OUTLETS, 208V OUTPUT. CHATSWORTH L1-1N0K4 OR APPROVED EQUAL.
21. SIDE-A POWER, L21-20R TWIST-LOCK RECEPTACLE 208V, 20A, 3 PHASE, 8.5 FT AFF, COORDINATE LOCATION WITH CONTRACTOR.
22. SIDE-B POWER, L21-20R TWIST-LOCK RECEPTACLE 208V, 20A, 3-PHASE, 8.5 FT AFF, COORDINATE LOCATION WITH CONTRACTOR.
23. SIDE-A POWER, L21-30R TWIST-LOCK RECEPTACLE 208V, 30A, 3-PHASE, 8.5 FT AFF, COORDINATE LOCATION WITH CONTRACTOR.
24. SIDE-B POWER, L21-30R TWIST-LOCK RECEPTACLE 208V, 30A, 3-PHASE, 8.5 FT AFF, COORDINATE LOCATION WITH CONTRACTOR.
25. 60 A, 208 V, 3-PHASE ZONE PDU BASE UNIT - REAR CIRCUITS WITH SIX NEMA L21-20R OUTPUT RECEPTACLES AND TWO 10' POWER CORDS TERMINATING IN HARD-WIRED JUNCTION BOX. ZONIT ZPDS-208V60A-HW-6L21-2 OR APPROVED EQUAL.
26. TOP-MOUNTED RACK BONDING BUSBAR (RBB)

Revisions:	Date:

CONSULTANT
HFS COMPANY
8718 Botts Lane
San Antonio, Texas 78217
www.hfscompany.com
Phone: (210) 816-4784
Fax: (210) 881-6808
jbianco@hfscompany.com

PROJECT MANAGEMENT
HFS COMPANY
8718 Botts Lane
San Antonio, Texas 78217
www.hfscompany.com
Phone: (210) 816-4784
Fax: (210) 881-6808
jbianco@hfscompany.com

REGISTERED COMMUNICATIONS DISTRIBUTION DESIGNER
BICSI
Raymond Martinez Jr.
BICSI ID # 143493
EXPIRES 12-31-24
RCDD
21-OCT-22

Construction and Facilities Management

VA U.S. Department of Veterans Affairs

Drawing Title: BLDG. TB - FIRST FLOOR - TECHNOLOGY TELECOM ROOM PLAN	Phase: 100% CONSTRUCTION DOCUMENTS	Project Title: CINCINNATI VAMC EHRM INFRASTRUCTURE UPGRADES	Project Number: 539-21-701
			Building Number: TB
Approved: Project Director	FULLY SPRINKLERED	Location: 3200 VINE ST., CINCINNATI, OH	Drawing Number: TN-490-C.TB.1
		Issue Date: 18-OCT-2022 / Checked: RMJr / Drawn: VV	

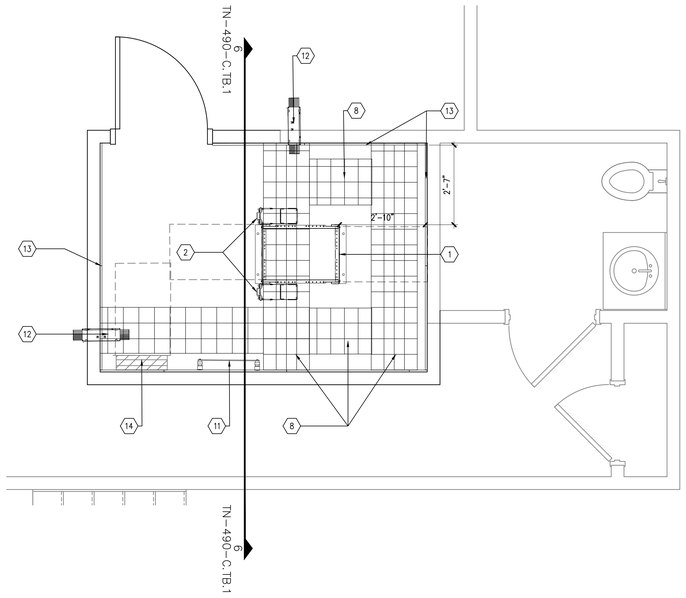

1 TELECOM ROOM LAYOUT - BLDG. TB - FLOOR 1
SCALE: 1/2" = 1'-0"

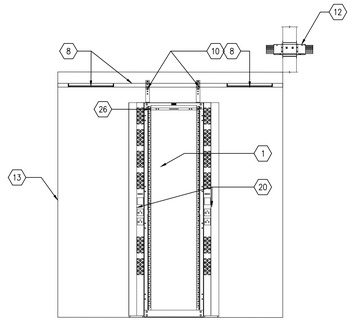

2 EAST WALL ELEVATION - BLDG. TB - FLOOR 1
SCALE: N.T.S

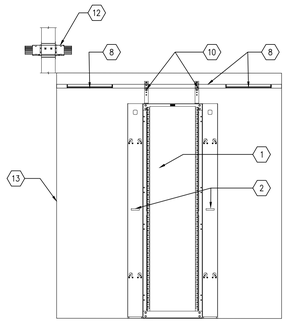

3 WEST WALL ELEVATION - BLDG. TB - FLOOR 1
SCALE: N.T.S

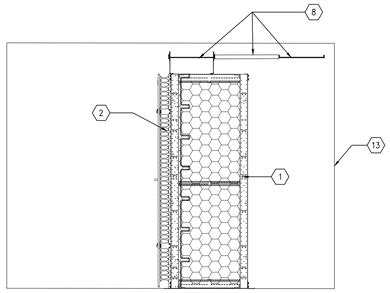

4 SOUTH WALL ELEVATION - BLDG. TB - FLOOR 1
SCALE: N.T.S

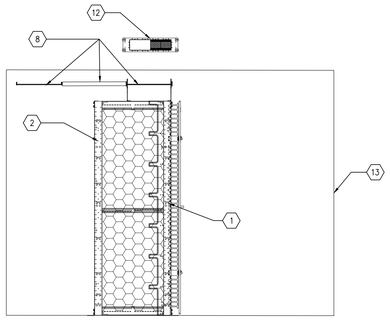

5 NORTH WALL ELEVATION - BLDG. TB - FLOOR 1
SCALE: N.T.S

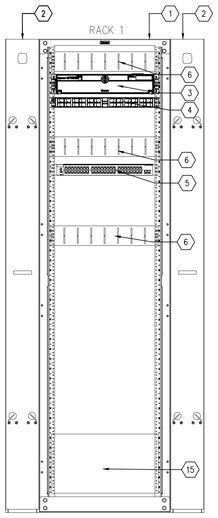

6 RACK ELEVATION - FRONT VIEW - BLDG. TB - FLOOR 1
SCALE: N.T.S.

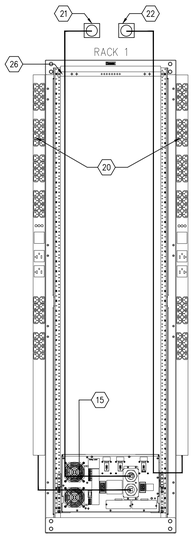

7 RACK ELEVATION - REAR VIEW - BLDG. TB - FLOOR 1
SCALE: N.T.S.

GENERAL NOTES

1. CONTRACTOR SHALL COORDINATE THE EQUIPMENT'S INSTALLATION AND FINAL LOCATION WITH THE ELECTRICAL AND MECHANICAL DIVISION. REFER TO ELECTRICAL, MECHANICAL AND PLUMBING DRAWINGS.
2. CONTRACTOR SHALL INSTALL PATHWAY DIVIDERS, RADIUS DROP AND ANY OTHER FITTING FOR A PROPER CABLE RUNWAY INSTALLATION.
3. CONTRACTOR SHALL COORDINATE THE EZ-PATH LOCATIONS WITH THE PATHWAY SYSTEM LAYOUT OUTSIDE EACH TELECOM ROOM. REFER TO FLOOR PLAN DRAWINGS.
4. CONTRACTOR SHALL INSTALL BACKBONE RISER SLEEVES OF THE SIZE AS INDICATED ON THE PLANS. REFER TO SECTION 27 15 00 COMMUNICATIONS STRUCTURED CABLING AND SECTION 27 05 33 RACEWAYS AND BOXES FOR COMMUNICATIONS SYSTEMS.
5. CONTRACTOR SHALL X-RAY CONCRETE FLOOR BEFORE CORE DRILLING. CONTRACTOR SHALL COORDINATE WITH THE COR BEFORE BEGINNING DRILLING.
6. CONTRACTOR SHALL FIRESTOP RISER SLEEVES AND EMPTY SPARE RISER SLEEVES. REFER TO SECTION 07 84 00 FIRESTOPPING.
7. CONTRACTOR SHALL INSTALL AN VERTICAL LADDER TYPE CABLE TRAY ON THE WALL ABOVE THE VERTICAL RISER SLEEVES FOR BACKBONE CABLE SUPPORT AS INDICATED ON THE PLANS. THE CABLE TRAY SHALL BE SECURELY ANCHORED TO THE WALL SUFFICIENT TO SUPPORT THE TOTAL WEIGHT OF CABLES AND CABLE TRAY PLUS 50%.
8. CONTRACTOR SHALL INSTALL CABLE SUPPORTS SUFFICIENT TO SUPPORT COMMUNICATIONS CABLES ON THE VERTICAL CABLE TRAY WITHOUT DAMAGING OR DEFORMING THE CABLE.
9. CONTRACTOR SHALL LABEL EACH CABLE AT 42 INCHES A.F.F. ON EACH FLOOR. REFER TO SECTION 27 15 00 COMMUNICATIONS STRUCTURED CABLING.

KEYED NOTES

1. MIGHTY 20 Mo CHANNEL RACK WITH HEXGUARD CABLE PASSAGE, 23.75" X 30" DEEP, 7' HIGH
2. VERTICAL CABLE MANAGER, 6.45" WIDE X 10.26" DEEP.
3. FIBER OPTIC ENCLOSURE WITH DUPLEX-LC, MPO CASSETS
4. ANGLED PATCH PANEL, 48-PORT, 1U, HIGH DENSITY.
5. ETHERNET SWITCH (GFGI)
6. HORIZONTAL CABLE MANAGER, SINGLE SIDED.
7. 12" CABLE WIRE BASKET TRAY
8. 18" CABLE WIRE BASKET TRAY
9. 24" CABLE WIRE BASKET TRAY.
10. WIRE BASKET CABLE TRAY ELEVATION BRACKETS
11. 24-IN. TMGB GROUND BUS BAR
12. PROVIDE FIRE STOPPING DEVICE WITH SPLIT WALL PLATE. EZ PATH SERIES 44+ FIRE RATED PATHWAY OR APPROVED EQUAL.
13. AC GRADE, FIRE RETARDANT PLYWOOD, PAINTED WITH TWO COATS OF HIGH GLOSS, FIRE RETARDANT PAINT APPLIED TO ALL WALLS.
14. ELECTRICAL PANEL BOARDS. REFER TO ELECTRICAL DRAWINGS.
15. RACK-MOUNTED, 5KW, 208V, UPS WITH NEMA 20A, L21-20P INPUT AND L21-20R OUTPUT.
16. WALL MOUNT CABINET, 24"x24"x48", WITH FAN KIT AND TWO SETS OF RAILS, SOLID DOOR. CHATSWORTH 11840-736, FAN KIT 40972-001, 36" CABINET RAILS 12787-524, OR APPROVED EQUAL.
17. 30 A, 208 V, 3-PHASE, ZPDU, (4) NEMA L21-20R, (6) NEMA 5-20 OUTLETS AND 2 x 10' POWER CORDS TERMINATING IN NEMA L21-30P. ZONIT ZPDS-208V30A -L21-4L21-20R-CR OR APPROVED EQUAL
18. SIDE A POWER, REQUIRES A 208V, 60A, THREE-PHASE CIRCUIT TERMINATING IN A HARD-WIRED JUNCTION BOX.
19. SIDE B POWER, REQUIRES A 208V, 60A, THREE-PHASE CIRCUIT TERMINATING IN A HARD-WIRED JUNCTION BOX.
20. VERTICAL RACK PDU, L21-20 PLUG, 3-PHASE WYE, 20A, 208V INPUT, (24) C13 (6) C19 (6) 5-20R OUTLETS, 208V OUTPUT. CHATSWORTH L1-1N0K4 OR APPROVED EQUAL.
21. SIDE-A POWER, L21-20R TWIST-LOCK RECEPTACLE 208V, 20A, 3 PHASE, 8.5 FT AFF, COORDINATE LOCATION WITH CONTRACTOR.
22. SIDE-B POWER, L21-20R TWIST-LOCK RECEPTACLE 208V, 20A, 3-PHASE, 8.5 FT AFF, COORDINATE LOCATION WITH CONTRACTOR.
23. SIDE-A POWER, L21-30R TWIST-LOCK RECEPTACLE 208V, 30A, 3-PHASE, 8.5 FT AFF, COORDINATE LOCATION WITH CONTRACTOR.
24. SIDE-B POWER, L21-30R TWIST-LOCK RECEPTACLE 208V, 30A, 3-PHASE, 8.5 FT AFF, COORDINATE LOCATION WITH CONTRACTOR.
25. 60 A, 208 V, 3-PHASE ZONE PDU BASE UNIT - REAR CIRCUITS WITH SIX NEMA L21-20R OUTPUT RECEPTACLES AND TWO 10' POWER CORDS TERMINATING IN HARD-WIRED JUNCTION BOX. ZONIT ZPDS-208V60A-HW-6L21-2 OR APPROVED EQUAL.
26. TOP-MOUNTED RACK BONDING BUSBAR (RBB)

Revisions:	Date:

CONSULTANT
HFS COMPANY
8718 Botts Lane
San Antonio, Texas 78217
www.hfscompany.com
Phone: (210) 816-4784
Fax: (210) 881-6808
jbianco@hfscompany.com

PROJECT MANAGEMENT
HFS COMPANY
8718 Botts Lane
San Antonio, Texas 78217
www.hfscompany.com
Phone: (210) 816-4784
Fax: (210) 881-6808
jbianco@hfscompany.com

REGISTERED COMMUNICATIONS DISTRIBUTION DESIGNER
BICSI
Raymond Martinez Jr.
BICSI ID # 143493
EXPIRES 12-31-24
RCDD
21-OCT-22

Construction and Facilities Management

VA U.S. Department of Veterans Affairs

Drawing Title: BLDG. TB - FIRST FLOOR - TECHNOLOGY TELECOM ROOM PLAN	Phase: 100% CONSTRUCTION DOCUMENTS	Project Title: CINCINNATI VAMC EHRM INFRASTRUCTURE UPGRADES	Project Number: 539-21-701
			Building Number: TB
Approved: Project Director	FULLY SPRINKLERED	Location: 3200 VINE ST., CINCINNATI, OH	Drawing Number: TN-490-C.TB.1
		Issue Date: 18-OCT-2022 / Checked: RMJr / Drawn: VV	

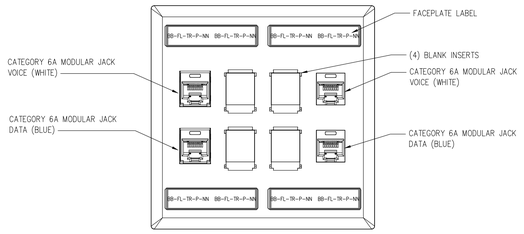

1 TYPICAL DETAILS - 2-GANG TELE-DATA OUTLET
SCALE: NTS

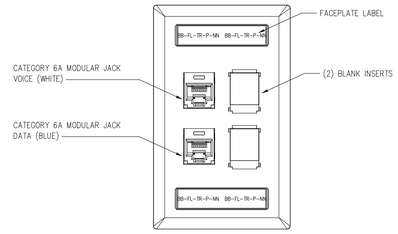

2 TYPICAL DETAILS - 1-GANG TELE-DATA OUTLET
SCALE: NTS

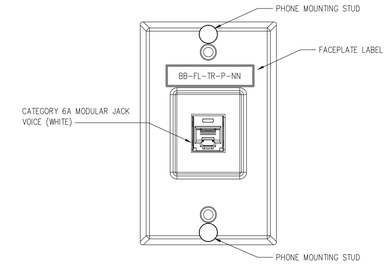

3 TYPICAL DETAILS - WALL PHONE OUTLET
SCALE: NTS

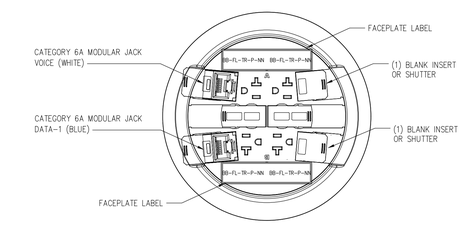

4 TYPICAL DETAILS - FLOOR BOX TELE-DATA OUTLET
SCALE: NTS

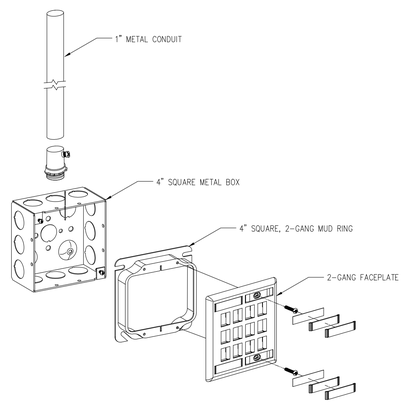

DETAIL NOTE:
1. INSTALLER TO PROVIDE TWO 1" CONDUITS WHERE CABLE QUANTITIES EXCEED THREE (3) CATEGORY 6A CABLES.
2. INSTALLER TO PROVIDE 4-11/16" SQUARE, 2-1/8" DEEP BOX WITH 2-GANG MUD RING. COORDINATE WITH SHEET ROCK CONTRACTOR ON MUD RING OFFSET DEPTH.
3. CONDUIT SHALL BE ROUTED FROM OUTLET BOX TO THE CLOSEST CABLE TRAY.
4. UNUSED FACEPLATE PORTS SHALL BE COVERED WITH BLANK INSERTS THAT ARE COLORED TO MATCH THE FACEPLATE.

5 TYPICAL DETAILS - 2-GANG OUTLET BOX
SCALE: NTS

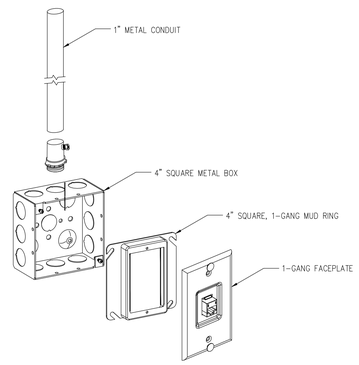

DETAIL NOTE:
1. INSTALLER TO PROVIDE TWO 1" CONDUITS WHERE CABLE QUANTITIES EXCEED THREE (3) CATEGORY 6A CABLES.
2. INSTALLER TO PROVIDE 4-11/16" SQUARE, 2-1/8" DEEP BOX WITH 2-GANG MUD RING. COORDINATE WITH SHEET ROCK CONTRACTOR ON MUD RING OFFSET DEPTH.
3. CONDUIT SHALL BE ROUTED FROM OUTLET BOX TO THE CLOSEST CABLE TRAY.
4. UNUSED FACEPLATE PORTS SHALL BE COVERED WITH BLANK INSERTS THAT ARE COLORED TO MATCH THE FACEPLATE.

6 TYPICAL DETAILS - 1-GANG OUTLET BOX
SCALE: NTS

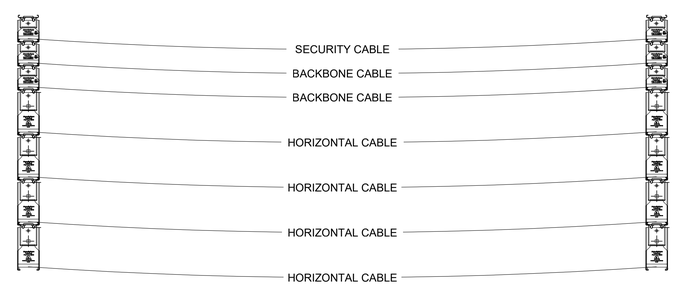

DETAIL NOTES:
1. NON-CONTINUOUS OR OPEN-TOP CABLE SUPPORTS SHALL BE REFERRED TO AS J-HOOKS. MONOSYSTEMS J-HOOKS SHOWN HERE ARE H-233-S, 2"X3"; H-433-S, 4"X3".
2. J-HOOKS SHALL BE INSTALLED WITH A MAXIMUM SPACING OF FOUR (4) FEET TO FIVE (5) FEET CENTERS; SPACING SHALL VARY BETWEEN FOUR (4) AND FIVE (5) FEET.
3. J-HOOKS SHALL NOT BE ATTACHED TO THE CEILING SUPPORT GRID SYSTEM.
4. J-HOOKS SHALL BE ATTACHED TO THE BUILDING STRUCTURE (I.E. RED-IRON OR WALL) AND MAY BE SUSPENDED WITH APPROPRIATE SUPPORTS OR FASTENERS.
5. CABLE PATHWAY SHALL HAVE A MINIMUM CLEARANCE OF 3" CLEAR SPACE BETWEEN THE J-HOOKS AND CEILING STRUCTURE.
6. INSTALLER SHALL INSTALL APPROPRIATE SUPPORTS ACCORDING TO MANUFACTURER INSTALLATION INSTRUCTIONS.
7. CABLE SYSTEMS SHALL HAVE SEPARATE J-HOOK PATHWAYS UNLESS OTHERWISE NOTED OR APPROVED BY COR.
8. INSTALLER SHALL SUBMIT SHOP DRAWINGS FOR COR APPROVAL TWO (2) WEEKS PRIOR TO INSTALLATION.

7 TYPICAL DETAILS - J-HOOK CABLE PATHWAY
SCALE: N.T.S.

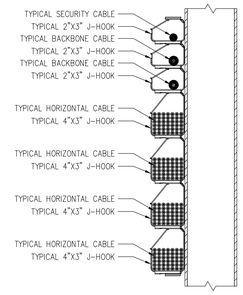

Revisions:	Date:

CONSULTANT

HFS COMPANY
8718 Botts Lane
San Antonio, Texas 78217
www.hfscompany.com
Phone: (210) 816-4784
Fax: (210) 881-6808
jbianco@hfscompany.com

PROJECT MANAGEMENT

HFS COMPANY
8718 Botts Lane
San Antonio, Texas 78217
www.hfscompany.com
Phone: (210) 816-4784
Fax: (210) 881-6808
jbianco@hfscompany.com

REGISTERED COMMUNICATIONS DISTRIBUTION DESIGNER
Bicsi
Raymond Martinez Jr.
BICSI ID # 143493
EXPIRES 12-31-24
RCDD
04-MAY-22

Construction and Facilities Management

VA U.S. Department of Veterans Affairs

Drawing Title	Phase	Project Title	Project Number
TECHNOLOGY - TYPICAL DETAILS	100% CONSTRUCTION DOCUMENTS	CINCINNATI VAMC EHRM INFRASTRUCTURE UPGRADES	539-21-701
Approved: Project Director	FULLY SPRINKLERED	Location: 3200 VINE ST., CINCINNATI, OH	Building Number: --
		Issue Date: 04-MAY-2022 / Checked: NA / Drawn: RMJr	Drawing Number: TN-500

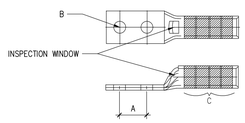

WIRE GAUGE	A	B	C
#6AWG	5/8"	1/4"	BLUE
#2AWG	1"	3/8"	BROWN
2/0AWG	1.75"	1/2"	BLACK
4/0AWG	1.75"	1/2"	PURPLE

A = HOLE SPACING
B = STUD/BOLT SIZE
C = BAND COLOR

DETAIL NOTE:
1. COMPRESSION GROUND LUGS SHALL HAVE INSPECTION WINDOWS.
2. INFORMATION PROVIDED FOR REFERENCE. INSTALLER SHALL DETERMINE THE APPROPRIATE WIRE SIZE AND GROUND LUGS.

1 TYPICAL DETAILS - COMPRESSION GROUND LUG
SCALE: N.T.S.

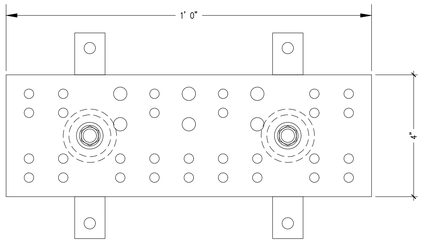

2 TYPICAL DETAILS - GROUND BUS BAR (TGB)
SCALE: N.T.S.

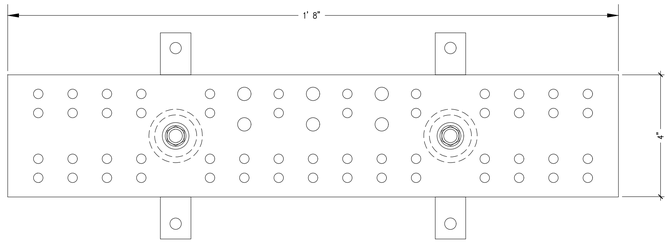

3 TYPICAL DETAILS - GROUND BUS BAR (TMGB)
SCALE: N.T.S.

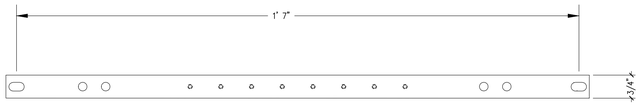

4 TYPICAL DETAILS - RACK GROUND BUS BAR
SCALE: N.T.S.

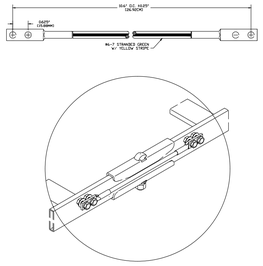

5 TYPICAL DETAILS - CABLE RUNWAY GROUNDING
SCALE: N.T.S.

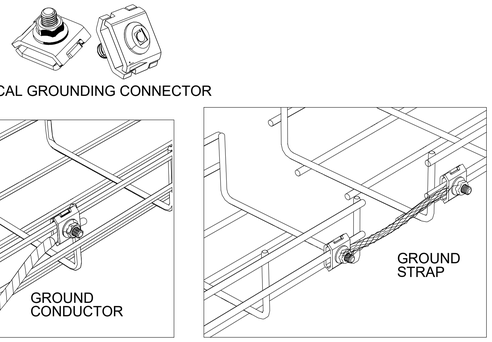

6 TYPICAL DETAILS - BASKET CABLE TRAY GROUNDING
SCALE: N.T.S.

TELECOMMUNICATIONS GROUND CONDUCTOR TBB/GE SIZING:

NOTE: THE TBB SHOULD BE ROUTED AS A CONTINUOUS CONDUCTOR TO THE TGB IN AS STRAIGHT A ROUTE AS IS POSSIBLE AND WITHOUT SPLICES.

LENGTH IN FT. (M)	WIRE SIZE (AWG)
LESS THAN 13 (4)	#6
14–20 (4–6)	#4
21–26 (6–8)	#3
27–33 (8–10)	#2
34–41 (10–13)	#1
42–52 (13–16)	#1/0
53–66 (16–20)	#2/0
67–84 (20–26)	#3/0
85–105 (38–46)	#4/0
106–125 (32–38)	250kcmil
126–150 (38–46)	300kcmil
151–175 (46–53)	350kcmil
178–250 (53–76)	500kcmil
251–300 (76–91)	600kcmil
GREATER THAN 301 (91)	750kcmil

7 TYPICAL DETAILS - TBB/GE CONDUCTOR SIZING
SCALE: N.T.S.

Revisions:	Date:

CONSULTANT

HFS COMPANY
8718 Botts Lane
San Antonio, Texas 78217
www.hfscompany.com
Phone: (210) 816-4784
Fax: (210) 881-6808
jbianco@hfscompany.com

PROJECT MANAGEMENT

HFS COMPANY
8718 Botts Lane
San Antonio, Texas 78217
www.hfscompany.com
Phone: (210) 816-4784
Fax: (210) 881-6808
jbianco@hfscompany.com

REGISTERED COMMUNICATIONS DISTRIBUTION DESIGNER
Bicsi
Raymond Martinez Jr.
BICSI ID # 143493
Expires 03-31-24
RCDD
04-MAY-22

Construction and Facilities Management
VA U.S. Department of Veterans Affairs

Drawing Title	Phase	Project Title	Project Number
TECHNOLOGY - TYPICAL DETAILS	100% CONSTRUCTION DOCUMENTS	CINCINNATI VAMC EHRM INFRASTRUCTURE UPGRADES	539-21-701
Approved: Project Director	FULLY SPRINKLERED	Location: 3200 VINE ST., CINCINNATI, OH	Building Number: --
		Issue Date: 04-MAY-2022 / Checked: / Drawn: RMJr	Drawing Number: TN-501

GROUNDING NOTES:

1. ALL GROUND CONNECTIONS SHALL BE MADE WITH HEAVY DUTY 2 HOLES COMPRESSION LUGS WITH STAINLESS STEEL HEX HEAD CAP SCREWS WITH SS LOCKING NUTS (TWO SREWS AND NUTS PER 2 HOLES LUG).
2. RUN TBC IN EMT CONDUIT. PROVIDE INSULATED GROUNDING BUSHING - MALLEABLE IRON STEEL CITY #BG-807 AT CONDUIT ENDS AND GROUND PER NEC GROUNDING TO BUILDING STRUCTURE, CONDUITS, UTITILITY PIPING, OR ELECTRICAL SUBPANELS IN LIEU OF BONDING TO BUILDING MAIN ELECTRICAL SERVICE GROUND IS NOT ACCEPTABLE.
3. GROUND ALL COMMUNICATIONS RACKS WITH #6 AWG INSULATED STRANDED COPPER GROUNDING CONDUCTOR TO MAIN GROUNDING BUSBAR. GROUND RACKS INDIVIDUALLY TO BUSBAR (DO NOT LOOP GROUNDS). ROUTE CONDUCTOR ALONG RACK REAR AND CABLE RUNWAY TO GROUNDING BUSBAR.
4. GROUND EACH CONDUIT AND CONDUIT SUPPORTS STRUTS IN ALL COMMUNICATION ROOMS WITH #6 AWG INSULATED STRANDED COPPER GROUNDING CONDUCTOR TO GROUNDING BUSBAR. ROUTE CONDUCTOR IN CABLE RUNWAY TO GROUNDING BUSBAR.
5. GROUND CABLE RUNWAT WITH #6 AWG SOLID BARE COPPER GROUNDING CONDUCTOR TO GROUNDING BUSBAR. ROUTE CONDUCTOR IN CABLE RUNWAY TO GROUNDING BUSBAR.
6. MARK CONDUCTOR 6" FROM TERMINATION WITH GREEN TAPE.
7. ELECTRICAL CONTRACTOR TO PROVIDE #3/0 COPPER CABLE FROM BUILDING GROUND AND OTHER TELECOM ROOMS TO GROUND BAR LOCATION AND PROVIDE GROUNDING BAR IN EACH TELECOM ROOM. CABLING CONTRACTOR TO PROVIDE GROUNDING CABLING FROM EACH PEACE OF EQUIPMENT WITHIN THE TELECOM ROOM, UNLESS OTHERWISE NOTED.

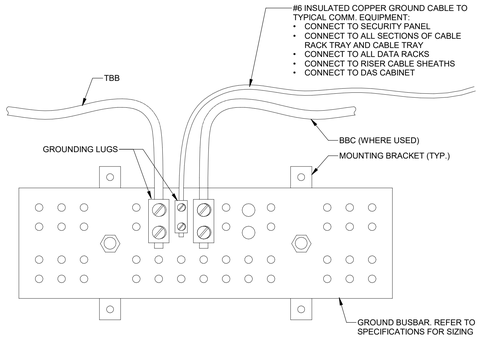

SBB FRONT ELEVATION

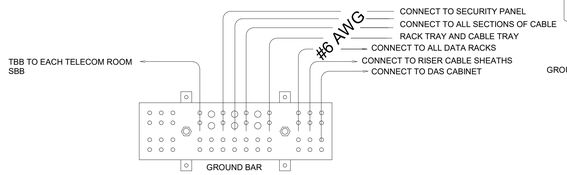

PBB

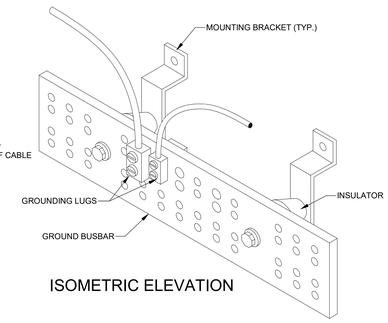

ISOMETRIC ELEVATION

1 GRD - GROUND BAR DETAIL
NTS

Description	Date

CONSULTANT

Ross&Baruzzini

LOW VOLTAGE/ IT
Ross & Baruzzini Inc.
1600 Riveredge Parkway NW
Suite 900
Atlanta, GA 30328

PROJECT MANAGEMENT

HFS COMPANY

8718 Botts Lane
San Antonio, Texas 78217
www.hfscompany.com
jbianco@hfscompany.com
Phone: (210) 816-4784
Fax: (210) 881-6808

REGISTERED COMMUNICATIONS DISTRIBUTION DESIGNER
Bicsi
Paul Renka
BICSI ID # 124731
EXPIRES 12-31-24
RCDD

Construction and Facilities Management

VA U.S. Department of Veterans Affairs

Drawing Title	Phase	Project Title	Project Number
TECHNOLOGY - TYPICAL DETAILS	100% CONSTRUCTION DOCUMENTS	CINCINNATI VAMC EHRM INFRASTRUCTURE UPGRADES	539-21-701
Approved: Project Director	FULLY SPRINKLERED	Location: 3200 VINE ST. CINCINNATI, OH. 45220	Building Number
		Issue Date: 04-MAY-2022 / Checked By: PR / Drawn By: TL	Drawing Number: TN-503
		Scale: NTS	

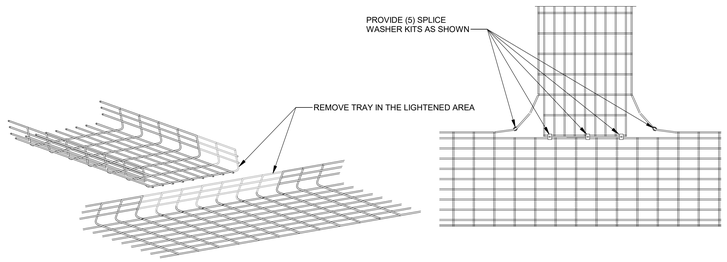

CABLE TRAY - JUNTION DETAIL

1 SCN - Basket Tray Junction
NTS

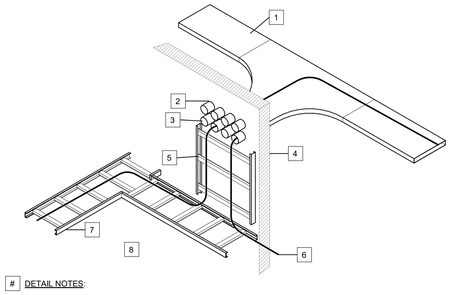

DETAIL NOTES:

1. TYPICAL SOLID OR VENTILATED CABLE TRAY -REFER TO PLANS FOR TYPES, SIZES, MOUNTING HEIGHT AND LAYOUTS.
2. TYPICAL WALL PENETRATION SLEEVE - REFER TO PLANS FOR EXACT QUANTITY, SIZE, AND LOCATION. ALL SLEEVES SHALL BE MINIMUM 100mm (4") UON.
3. PROVIDE FIRE STOPPING AS REQUIRED PER SPECIFICATIONS.
4. TYPICAL WALL - REFER TO ARCHITECTURAL PLANS FOR DETAILS.
5. PROVIDE VERTICAL LADDER CABLE TRAY AS REQUIRED WHEN ENTRY CABLE TRAY IS GREATER THAN 500mm ABOVE OR BELOW TELECOM ROOM CABLE TRAY.
6. TYPICAL CABLE - REFER TO PLANS AND CABLE SCHEDULES FOR ADDITIONAL INFORMATION.
7. TYPICAL LADDER CABLE TRAY USED WITHIN TELECOM.
8. ROOMS - REFER TO PLANS FOR SIZES AND LAYOUTS.

2 SCN - CABLE TRAY ROOM ENTRANCE
NTS

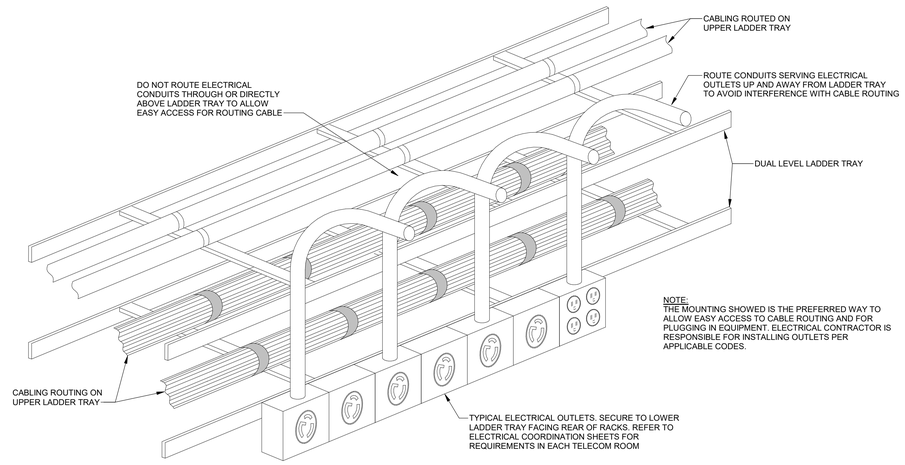

NOTE:
THE MOUNTING SHOWED IS THE PREFERRED WAY TO ALLOW EASY ACCESS TO CABLE ROUTING AND FOR PLUGGING IN EQUIPMENT. ELECTRICAL CONTRACTOR IS RESPONSIBLE FOR INSTALLING OUTLETS PER APPLICABLE CODES.

3 SCN - ELECTRICAL OUTLET MOUNTING
NTS

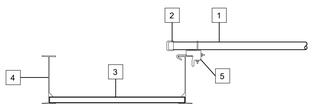

DETAIL NOTES:

1. MINIMUM CONDUIT SIZE 25mm. CONDUITS SHALL NOT CONNECT THROUGH THE BOTTOM OF THE CABLE TRAY.
2. PROVIDE CONDUIT BUSHINGS AND REMOVE ALL SHARP EDGES AND BURRS TO PREVENT DAMAGE TO CABLING INSULATION.
3. CABLE TRAY, SOLID OR VENTILATED.
4. CABLE TRAY AND CONDUIT SHALL BE SUPPORTED SEPARATELY PER NEC SUPPORT REQUIREMENTS AND MANUFACTURER RECOMMENDATIONS.
5. NRTL LISTED CONDUIT TO CABLE TRAY CLAMP.

4 SCN -CONDUIT TERMINATION
NTS

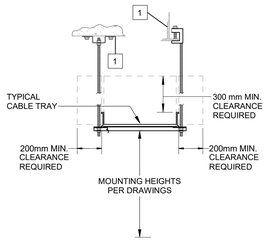

DETAIL NOTES:

1. APPROVED SUPPORT AND MOUNTING STRUCTURE AS REQUIRED BY MANUFACTURER, ARCHITECTURAL CONFIGURATION, AND WEIGHT SUPPORTED.

5 SCN - CABLE TRAY CLEARANCE
NTS

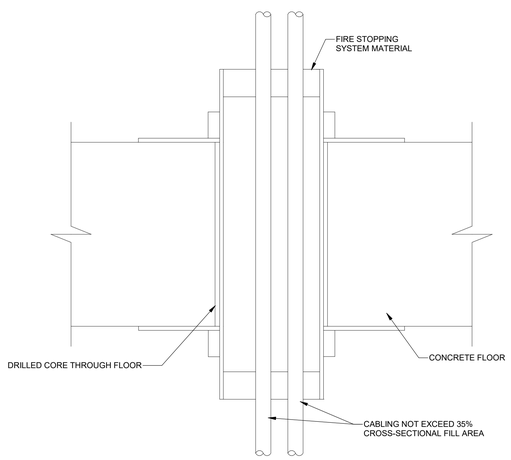

NOTE:
PROVIDE APPROPRIATE SIZE SLEEVE.

6 SCN - FIRE STOPPING THROUGH FLOOR
NTS

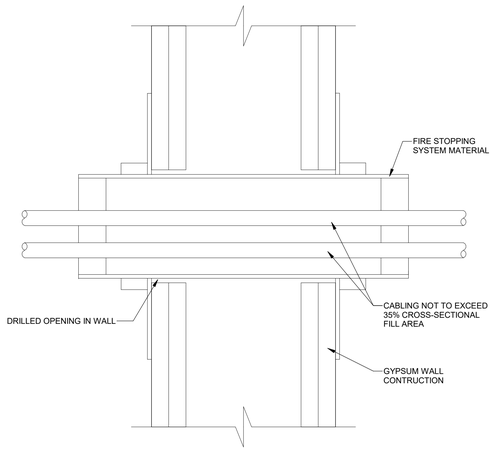

NOTE:
INSTALL WHENEVER CABLES MUST PASS THROUGH FULL HEIGHT PARTITION.

7 SCN - FIRE STOPPING THROUGH PARTITION
NTS

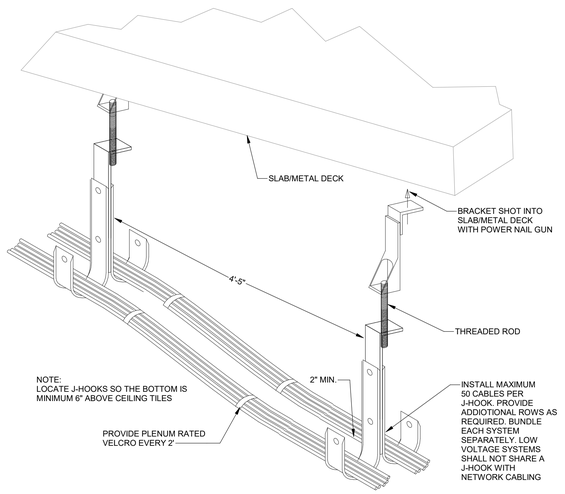

NOTE:
LOCATE J-HOOKS SO THE BOTTOM IS MINIMUM 6" ABOVE CEILING TILES

8 SCN - J-HOOK ASSEMBLY
NTS

Description	Date

CONSULTANT

Ross&Baruzzini

LOW VOLTAGE/ IT
Ross & Baruzzini Inc.
1600 Riveredge Parkway NW
Suite 900
Atlanta, GA 30328

PROJECT MANAGEMENT

HFS COMPANY
8718 Botts Lane
San Antonio, Texas 78217
www.hfscompany.com
jbianco@hfscompany.com
Phone: (210) 816-4784
Fax: (210) 881-6808

REGISTERED COMMUNICATIONS DISTRIBUTION DESIGNER
Bicsi
Paul Tomko
BICSI ID 812473
Expires 12-31-25
RCDD

Construction and Facilities Management

VA U.S. Department of Veterans Affairs

Drawing Title: TECHNOLOGY - TYPICAL DETAILS	Phase: 100% CONSTRUCTION DOCUMENTS	Project Title: CINCINNATI VAMC EHRM INFRASTRUCTURE UPGRADES	Project Number: 539-21-701
Approved: Project Director	FULLY SPRINKLERED	Location: 3200 VINE ST. CINCINNATI, OH. 45220	Building Number:
		Issue Date: 04-MAY-2022 / Checked By: PR / Drawn By: TL	Drawing Number: TN-504
		Scale: As indicated	

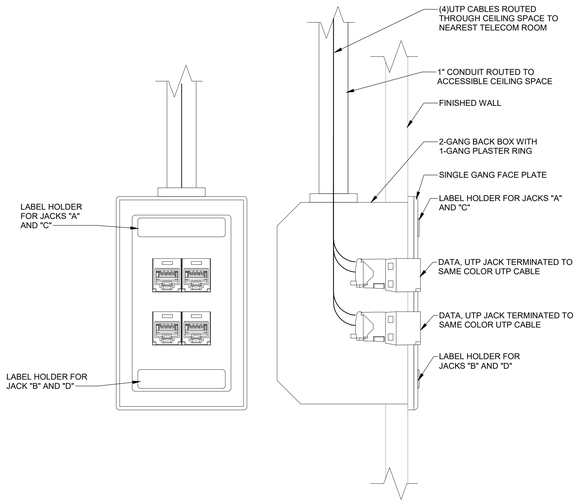

3 HCS - COMM OUTLET WITH (4) JACKS
NTS

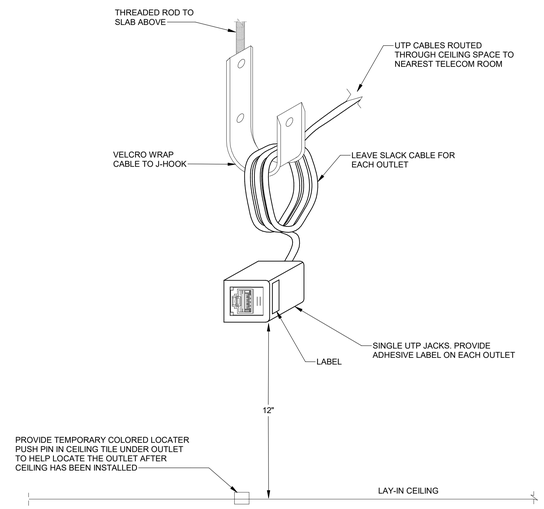

5 HCS - ABOVE CEILING CAMERA OUTLET
NTS

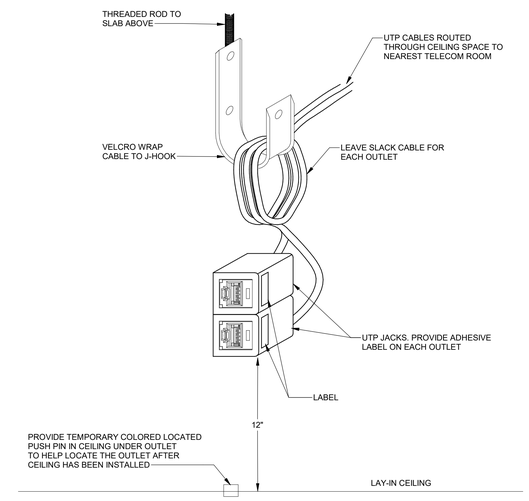

6 HCS - ABOVE CEILING OUTLET - (2) JACKS
NTS

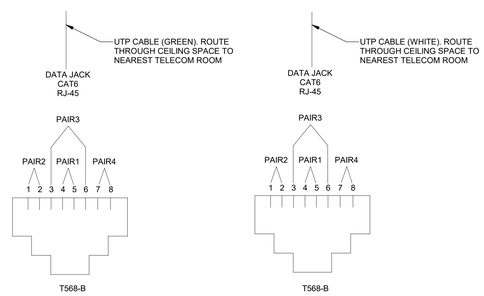

PIN #	COLOR CODE
	WHITE/ORANGE
2	ORANGE/WHITE
3	WHITE/GREEN
4	BLUE/WHITE
5	WHITE/BLUE
6	GREEN/WHITE
7	WHITE/BROWN
8	BROWN/WHITE

PIN #	COLOR CODE
1	WHITE/ORANGE
2	ORANGE/WHITE
3	WHITE/GREEN
4	BLUE/WHITE
5	WHITE/BLUE
6	GREEN/WHITE
7	WHITE/BROWN
8	BROWN/WHITE

7 HCS - RJ-45 WIRING DIAGRAM
NTS

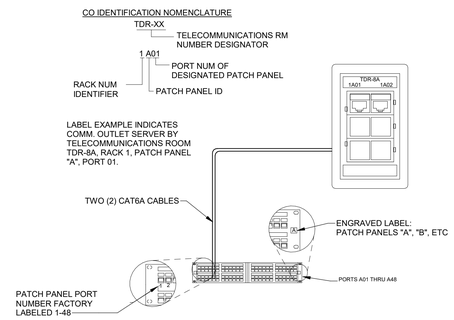

8 HCS - TIA / EIA 606A OUTLET LABELING
NTS

Description	Date

CONSULTANT

Ross&Baruzzini

LOW VOLTAGE/ IT
Ross & Baruzzini Inc.
1600 Riveredge Parkway NW
Suite 900
Atlanta, GA 30328

PROJECT MANAGEMENT

HFS COMPANY
8718 Botts Lane
San Antonio, Texas 78217
www.hfscompany.com
jbianco@hfscompany.com
Phone: (210) 816-4784
Fax: (210) 881-6808

REGISTERED COMMUNICATIONS DISTRIBUTION DESIGNER
Bicsi
Paul Remka
BICSI DD # 324731
EXPIRES 12-31-22
RCDD

Construction and Facilities Management

VA U.S. Department of Veterans Affairs

Drawing Title	Phase	Project Title	Project Number
TECHNOLOGY - TYPICAL DETAILS	100% CONSTRUCTION DOCUMENTS	CINCINNATI VAMC EHRM INFRASTRUCTURE UPGRADES	539-21-701
Approved: Project Director	FULLY SPRINKLERED	Location: 3200 VINE ST. CINCINNATI, OH. 45220	Building Number
		Issue Date: 04-MAY-2022 / Checked By: PR / Drawn By: TL	Drawing Number: TN-505
		Scale: NTS	

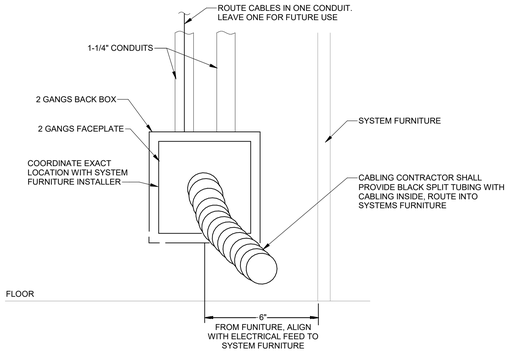

1 HCS - FURNITURE FEED
NTS

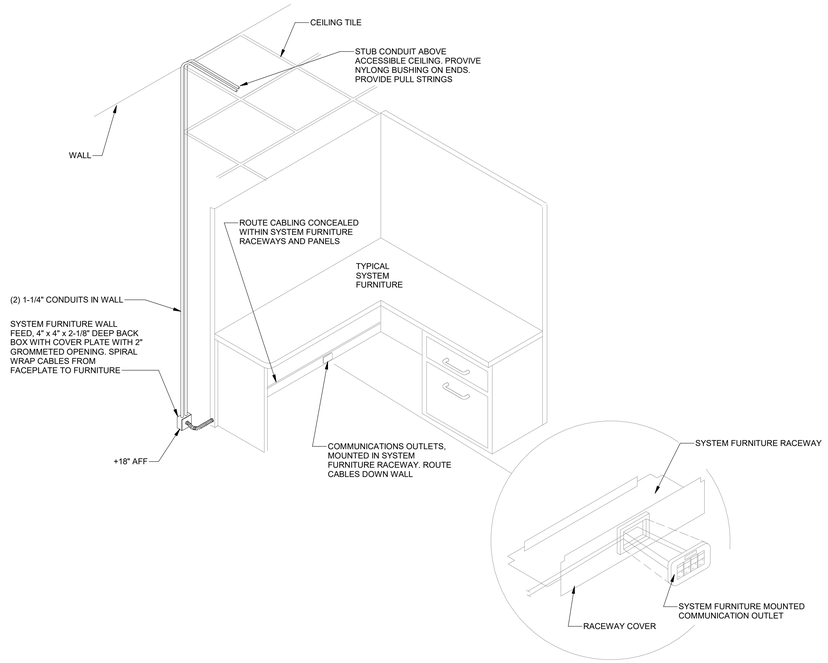

2 HCS - FURNITURE SYSTEM CABLE ROUTING
NTS

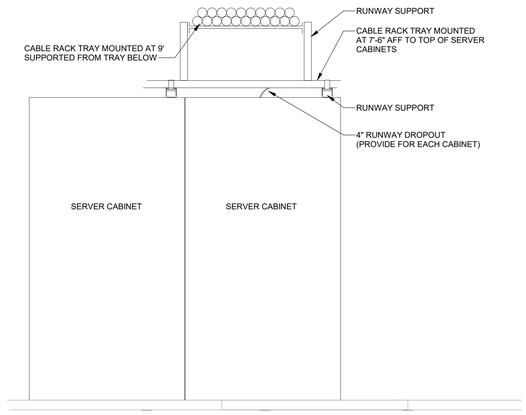

3 DTCR - CABLE TRAY AND FIBER RUNNER MOUNTING
NTS

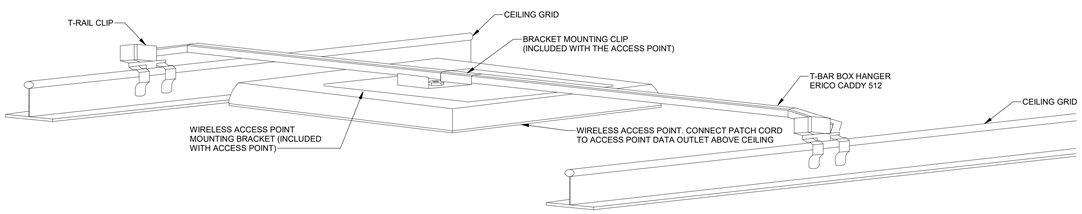

4 HCS - WAP - TYPICAL WIRELESS ACCESS POINT T-BRACING MOUNTING
NTS

Description	Date

CONSULTANT

Ross&Baruzzini

LOW VOLTAGE/ IT
Ross & Baruzzini Inc.
1600 Riveredge Parkway NW
Suite 900
Atlanta, GA 30328

PROJECT MANAGEMENT

HFS COMPANY

8718 Botts Lane
San Antonio, Texas 78217
www.hfscompany.com
jbianco@hfscompany.com
Phone: (210) 816-4784
Fax: (210) 881-6808

REGISTERED COMMUNICATIONS DISTRIBUTION DESIGNER
Bicsi
Paul Renka
BICSI ID # 324731
EXPIRES 12-31-24
RCDD

Construction and Facilities Management

VA U.S. Department of Veterans Affairs

Drawing Title TECHNOLOGY - TYPICAL DETAILS	**Phase** 100% CONSTRUCTION DOCUMENTS	**Project Title** CINCINNATI VAMC EHRM INFRASTRUCTURE UPGRADES		**Project Number** 539-21-701
Approved: Project Director	FULLY SPRINKLERED	**Location** 3200 VINE ST. CINCINNATI, OH. 45220		**Building Number**
		Issue Date: 04-MAY-2022	**Checked By:** PR	**Drawn By:** TL
		Scale: NTS		**Drawing Number** TN-506

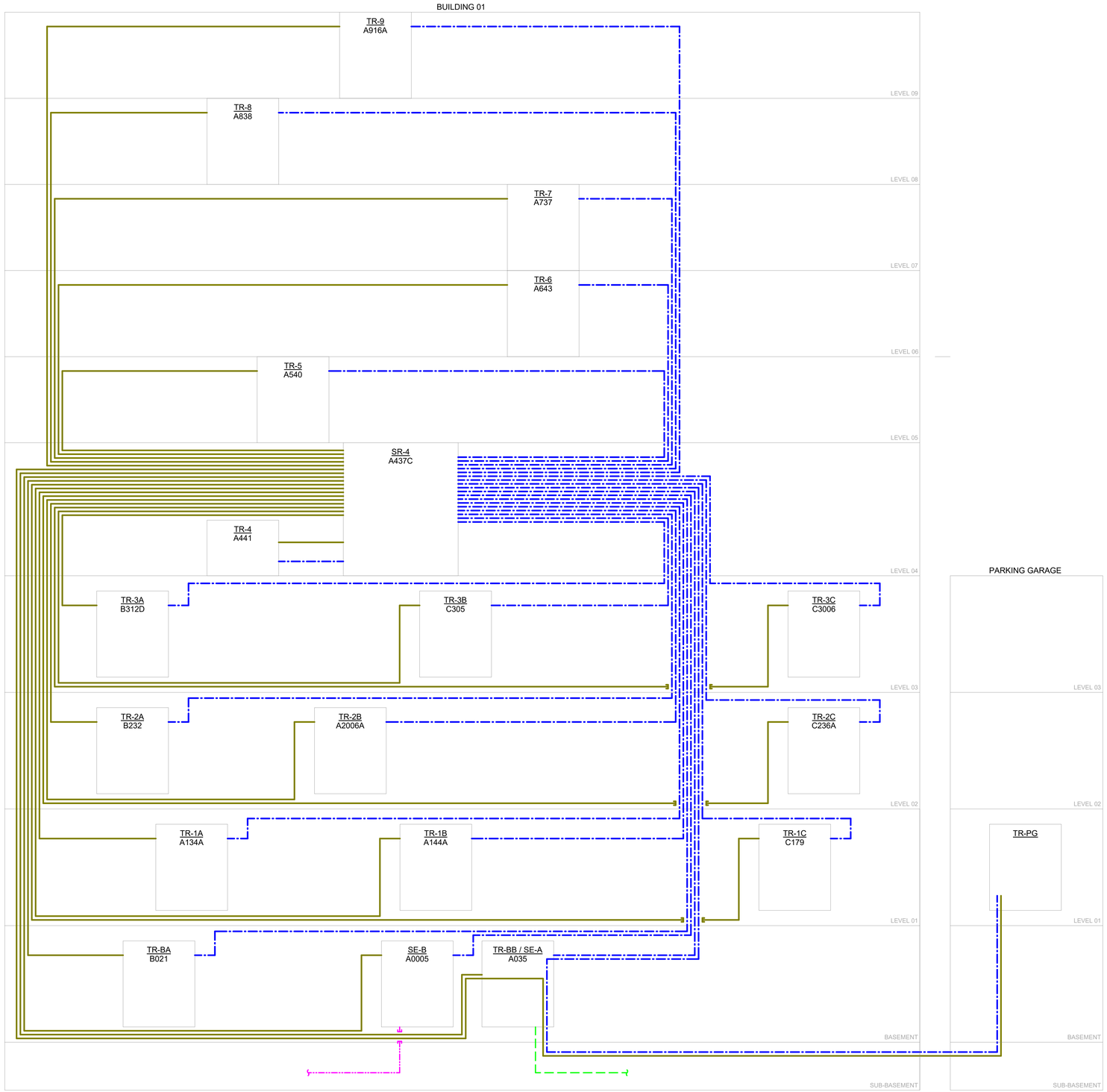

1 LOGICAL FIBER RISER DIAGRAM
N.T.S.

GENERAL NOTES:

1. PROVIDE (1) 24-STRAND MULTI MODE AND (1) 12-STRAND SINGLE MODE FIBER OPTIC CABLE FROM THE SERVER ROOM TO EACH TR, DIVERSELY ROUTED. ROUTE ONE 24-STRAND, 12-STRAND THROUGH "SIGNALS ROOM STACK A" AND THE OTHER 24-STRAND, 12-STRAND THROUGH "SIGNALS ROOM STACK B". DIVERSE BACKBONE FIBER ROUTING IS SHOWN ON OVERALL FLOOR PLANS.

LEGEND:

- A-SIDE FIBER BACKBONE
- B-SIDE FIBER BACKBONE
- A-SIDE SERVICE PROVIDER ENTRANCE CABLES
- B-SIDE SERVICE PROVIDER ENTRANCE CABLES

CABLE ROUTING SCHEDULE

FROM	TO	ROUTING STACK	CABLE
SR-4	TR-BB / SE-A	A	24-STRAND OM4 FIBER, 12-STRAND OS2 FIBER
SR-4	TR-BB / SE-A	B	24-STRAND OM4 FIBER, 12-STRAND OS2 FIBER
SR-4	SE-B	A	24-STRAND OM4 FIBER, 12-STRAND OS2 FIBER
SR-4	SE-B	B	24-STRAND OM4 FIBER, 12-STRAND OS2 FIBER
SR-4	TR-BA	A	24-STRAND OM4 FIBER, 12-STRAND OS2 FIBER
SR-4	TR-BA	B	24-STRAND OM4 FIBER, 12-STRAND OS2 FIBER
SR-4	TR-BB	A	24-STRAND OM4 FIBER, 12-STRAND OS2 FIBER
SR-4	TR-BB	B	24-STRAND OM4 FIBER, 12-STRAND OS2 FIBER
SR-4	TR-1A	A	24-STRAND OM4 FIBER, 12-STRAND OS2 FIBER
SR-4	TR-1A	B	24-STRAND OM4 FIBER, 12-STRAND OS2 FIBER
SR-4	TR-1B	A	24-STRAND OM4 FIBER, 12-STRAND OS2 FIBER
SR-4	TR-1B	B	24-STRAND OM4 FIBER, 12-STRAND OS2 FIBER
SR-4	TR-1C	A	24-STRAND OM4 FIBER, 12-STRAND OS2 FIBER
SR-4	TR-1C	B	24-STRAND OM4 FIBER, 12-STRAND OS2 FIBER
SR-4	TR-2A	A	24-STRAND OM4 FIBER, 12-STRAND OS2 FIBER
SR-4	TR-2A	B	24-STRAND OM4 FIBER, 12-STRAND OS2 FIBER
SR-4	TR-2B	A	24-STRAND OM4 FIBER, 12-STRAND OS2 FIBER
SR-4	TR-2B	B	24-STRAND OM4 FIBER, 12-STRAND OS2 FIBER
SR-4	TR-2C	A	24-STRAND OM4 FIBER, 12-STRAND OS2 FIBER
SR-4	TR-2C	B	24-STRAND OM4 FIBER, 12-STRAND OS2 FIBER
SR-4	TR-3A	A	24-STRAND OM4 FIBER, 12-STRAND OS2 FIBER
SR-4	TR-3A	B	24-STRAND OM4 FIBER, 12-STRAND OS2 FIBER
SR-4	TR-3B	A	24-STRAND OM4 FIBER, 12-STRAND OS2 FIBER
SR-4	TR-3B	B	24-STRAND OM4 FIBER, 12-STRAND OS2 FIBER
SR-4	TR-3C	A	24-STRAND OM4 FIBER, 12-STRAND OS2 FIBER
SR-4	TR-3C	B	24-STRAND OM4 FIBER, 12-STRAND OS2 FIBER
SR-4	TR-4	A	24-STRAND OM4 FIBER, 12-STRAND OS2 FIBER
SR-4	TR-4	B	24-STRAND OM4 FIBER, 12-STRAND OS2 FIBER
SR-4	TR-5	A	24-STRAND OM4 FIBER, 12-STRAND OS2 FIBER
SR-4	TR-5	B	24-STRAND OM4 FIBER, 12-STRAND OS2 FIBER
SR-4	TR-6	A	24-STRAND OM4 FIBER, 12-STRAND OS2 FIBER
SR-4	TR-6	B	24-STRAND OM4 FIBER, 12-STRAND OS2 FIBER
SR-4	TR-7	A	24-STRAND OM4 FIBER, 12-STRAND OS2 FIBER
SR-4	TR-7	B	24-STRAND OM4 FIBER, 12-STRAND OS2 FIBER
SR-4	TR-8	A	24-STRAND OM4 FIBER, 12-STRAND OS2 FIBER
SR-4	TR-8	B	24-STRAND OM4 FIBER, 12-STRAND OS2 FIBER
SR-4	TR-9	A	24-STRAND OM4 FIBER, 12-STRAND OS2 FIBER
SR-4	TR-9	B	24-STRAND OM4 FIBER, 12-STRAND OS2 FIBER
SR-4	TR-PG	A	24-STRAND SINGLE MODE INDOOR/OUTDOOR RATED OS2 FIBER OPTIC CABLE
SR-4	TR-PG	B	24-STRAND SINGLE MODE INDOOR/OUTDOOR RATED OS2 FIBER OPTIC CABLE

Description	Date

CONSULTANT

Ross&Baruzzini

LOW VOLTAGE/ IT
Ross & Baruzzini Inc.
1600 Riveredge Parkway NW
Suite 900
Atlanta, GA 30328

PROJECT MANAGEMENT

HFS COMPANY
8718 Botts Lane
San Antonio, Texas 78217
www.hfscompany.com
jbianco@hfscompany.com
Phone: (210) 816-4784
Fax: (210) 881-6808

REGISTERED COMMUNICATIONS DISTRIBUTION DESIGNER
BICSI
Paul Remke
BICSI ID # 324734
EXPIRES 12-31-23
RCDD

Construction and Facilities Management

VA U.S. Department of Veterans Affairs

Drawing Title: LOGICAL FIBER RISER DIAGRAM	Phase: 100% CONSTRUCTION DOCUMENTS	Project Title: CINCINNATI VAMC EHRM INFRASTRUCTURE UPGRADES	Project Number: 539-21-701
Approved: Project Director	FULLY SPRINKLERED	Location: 3200 VINE ST. CINCINNATI, OH. 45220	Building Number: C1
		Issue Date: 14-OCTOBER-2022 / Checked By: PR / Drawn By: TL	Drawing Number: TN-600-C.1
		Scale: As indicated	

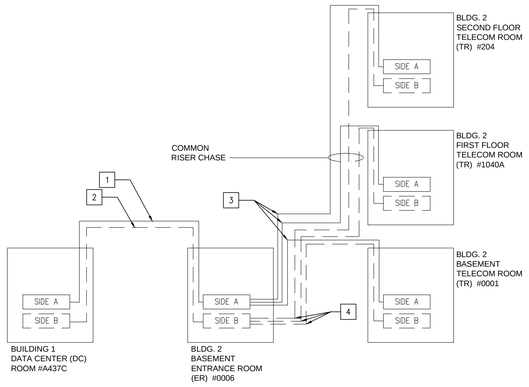

1 BLDG. 2 TECHNOLOGY RISER DIAGRAM
SCALE: N.T.S.

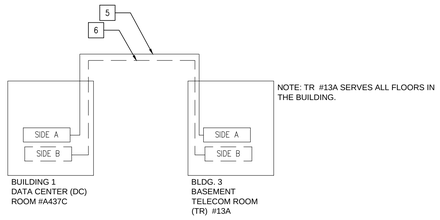

2 BLDG. 3 TECHNOLOGY RISER DIAGRAM
SCALE: N.T.S.

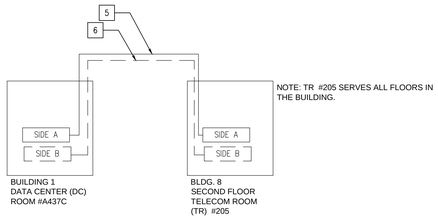

3 BLDG. 8 TECHNOLOGY RISER DIAGRAM
SCALE: N.T.S.

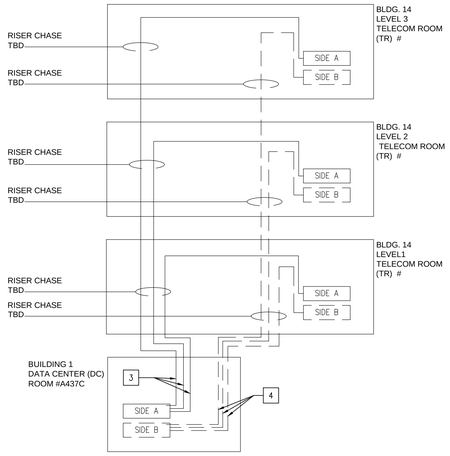

4 BLDG. 14 TECHNOLOGY RISER DIAGRAM
SCALE: N.T.S.

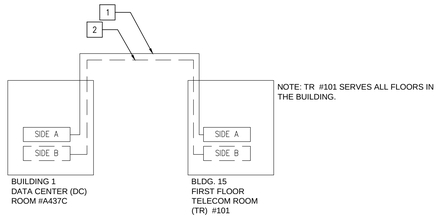

5 BLDG. 15 TECHNOLOGY RISER DIAGRAM
SCALE: N.T.S.

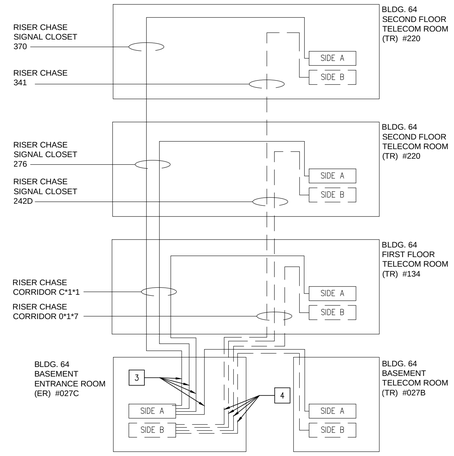

6 BLDG. 64 TECHNOLOGY RISER DIAGRAM
SCALE: N.T.S.

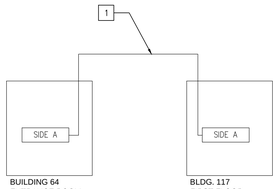

7 BLDG. 117 TECHNOLOGY RISER DIAGRAM
SCALE: N.T.S.

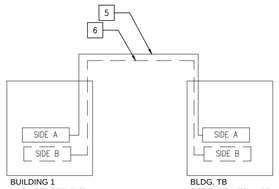

8 BLDG. TB EDUCATION TECHNOLOGY RISER DIAGRAM
SCALE: N.T.S.

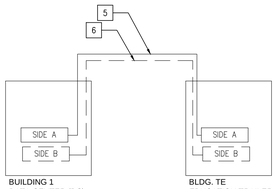

9 BLDG. TE RESEARCH TECHNOLOGY RISER DIAGRAM
SCALE: N.T.S.

GENERAL NOTES

1. CONTRACTOR SHALL FIELD VERIFY EXISTING CONDITIONS AND MEASUREMENTS PRIOR TO PLACING ORDERS FOR MATERIALS.
2. CONTRACTOR SHALL DETERMINE EXISTING CONDUIT CAPACITY FOR INNERDUCT AND FIBER OPTIC CABLE.
3. CONTRACTOR SHALL INSTALL NEW FABRIC INNERDUCT THAT SHALL BE MAXCELL DETECTABLE, 4"X3-CELL, FOR 4" CONDUIT OR EQUIVALENT.
4. INTER-BUILDING BACKBONE FIBER OPTIC CABLE SHALL BE ROUTED THROUGH AN EXISTING CONDUIT AND FABRIC INNERDUCT THAT SEPARATES SIDE A CABLES FROM SIDE B CABLES BY FIFTY (50) FEET OR TO THE GREATEST EXTENT POSSIBLE.
5. FIBER OPTIC STRANDS AND CASSETTES SHALL BE PLACED IN RACK MOUNTED, FIBER OPTIC ENCLOSURES; ONE (1) ENCLOSURE FOR SIDE A AND ONE (1) ENCLOSURE FOR SIDE B. REFER TO RACK ELEVATION DETAILS ON THE THE 400 SERIES, TR LAYOUT DRAWINGS.

KEYED NOTES

1. INTER-BUILDING, BACKBONE FIBER OPTIC CABLE, SM 0S1, 12-STRAND, SIDE A.
2. INTER-BUILDING, BACKBONE FIBER OPTIC CABLE, SM 0S1, 12-STRAND, SIDE B.
3. INTRA-BUILDING, BACKBONE FIBER OPTIC CABLE, MM 0M4, 24-STRAND, SIDE A.
4. INTRA-BUILDING, BACKBONE FIBER OPTIC CABLE, MM 0M4, 24-STRAND, SIDE B.
5. INTER-BUILDING, BACKBONE FIBER OPTIC CABLE, SM OS1, 24-STRAND, SIDE A.
6. INTER-BUILDING, BACKBONE FIBER OPTIC CABLE, SM OS1, 24-STRAND, SIDE B.

Revisions:	Date:

CONSULTANT

HFS COMPANY
8718 Botts Lane
San Antonio, Texas 78217
www.hfscompany.com
Phone: (210) 816-4784
Fax: (210) 881-6808
jbianco@hfscompany.com

PROJECT MANAGEMENT

HFS COMPANY
8718 Botts Lane
San Antonio, Texas 78217
www.hfscompany.com
Phone: (210) 816-4784
Fax: (210) 881-6808
jbianco@hfscompany.com

REGISTERED COMMUNICATIONS DISTRIBUTION DESIGNER
Bicsi
Raymond Martinez Jr.
BICSI ID # 143493
EXPIRES 12-31-24
RCDD
21-OCT-22

Construction and Facilities Management

VA U.S. Department of Veterans Affairs

Drawing Title: TECHNOLOGY RISER PLAN BLDGS. 2, 3, 8, 14, 15, 64, 117, TB, & TE

Approved: Project Director

Phase: 100% CONSTRUCTION DOCUMENTS

FULLY SPRINKLERED

Project Title: CINCINNATI VAMC EHRM INFRASTRUCTURE UPGRADES

Location: 3200 VINE ST., CINCINNATI, OH

Issue Date: 18-OCT-2022
Checked: RMJr
Drawn: VV

Project Number: 539-21-701
Building Number: -
Drawing Number: TN-601

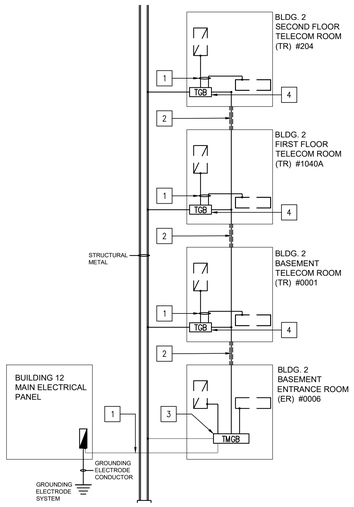

1 BLDG. 2 TELECOMMUNICATIONS BONDING RISER DIAGRAM
SCALE: N.T.S.

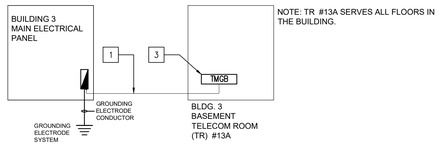

2 BLDG. 3 TELECOMMUNICATIONS BONDING RISER DIAGRAM
SCALE: N.T.S.

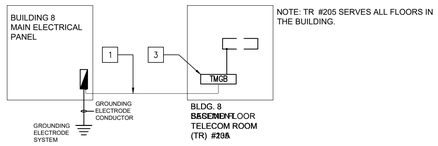

3 BLDG. 8 TELECOMMUNICATIONS BONDING RISER DIAGRAM
SCALE: N.T.S.

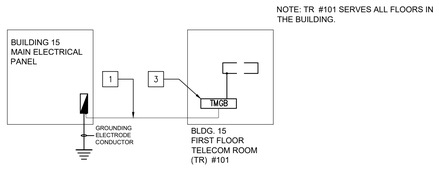

4 BLDG. 15 TECHNOLOGY BONDING RISER DIAGRAM
SCALE: N.T.S.

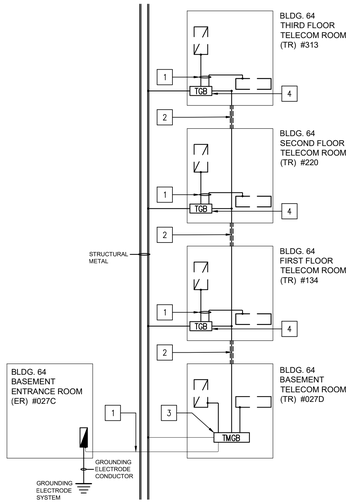

5 BLDG. 64 TELECOMMUNICATIONS BONDING RISER DIAGRAM
SCALE: N.T.S.

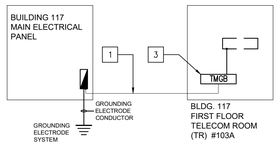

6 BLDG. 117 TELECOMMUNICATIONS BONDING RISER DIAGRAM
SCALE: N.T.S.

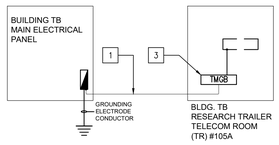

7 BLDG. TB EDUCATION TELECOMMUNICATIONS BONDING RISER DIAGRAM
SCALE: N.T.S.

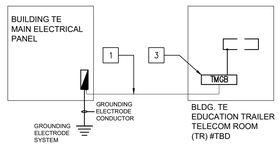

8 BLDG. TE RESEARCH TELECOMMUNICATIONS BONDING RISER DIAGRAM
SCALE: N.T.S.

GENERAL NOTES

1. ELECTRICAL INSTALLER SHALL DETERMINE THE CORRECT CONDUCTORS SIZE ACCORDING TO NEC 70 AND ANSI/TIA-607-D. REFER TO TN-502, DETAIL 7.
2. ELECTRICAL INSTALLER SHALL SUBMIT SHOP DRAWINGS AND CALCULATIONS TO COR FOR APPROVAL ACCORDING TO 01 33 23 AND 27 05 11.
3. ELECTRICAL INSTALLER TO PROVIDE AND INSTALL BONDING BUS BARS AND CONDUCTORS AS INDICATED.
4. EQUIPMENT RACK AND CABINET GROUND BARS, BONDING CONDUCTORS, AND CONNECTORS TO BE PROVIDED AND INSTALLED BY THE TELECOMMUNICATIONS INSTALLER.

KEYED NOTES

1. TELECOMMUNICATIONS BONDING CONDUCTOR (TBC).
2. TELECOMMUNICATIONS BONDING BACKBONE (TBB).
3. TELECOMMUNICATIONS MAIN GROUND BUS BAR (TMGB).
4. TELECOMMUNICATIONS GROUND BUS BAR (TGB).

Revisions:	Date:

CONSULTANT

HFS COMPANY
8718 Botts Lane
San Antonio, Texas 78217
www.hfscompany.com
Phone: (210) 816-4784
Fax: (210) 881-6808
jbianco@hfscompany.com

PROJECT MANAGEMENT

HFS COMPANY
8718 Botts Lane
San Antonio, Texas 78217
www.hfscompany.com
Phone: (210) 816-4784
Fax: (210) 881-6808
jbianco@hfscompany.com

REGISTERED COMMUNICATIONS DISTRIBUTION DESIGNER
Bicsi
Raymond Martinez Jr.
BICSI ID # 143493
EXPIRES 03-31-24
RCDD
04-MAY-22

Construction and Facilities Management
VA U.S. Department of Veterans Affairs

Drawing Title: TECHNOLOGY BONDING RISER PLAN BLDGS. 2, 3, 8, 15, 64, 117, TB, & TE

Approved: Project Director

Phase: 100% CONSTRUCTION DOCUMENTS

FULLY SPRINKLERED

Project Title: CINCINNATI VAMC EHRM INFRASTRUCTURE UPGRADES

Location: 3200 VINE ST., CINCINNATI, OH

Issue Date: 04-MAY-2022
Checked:
Drawn: RMJr

Project Number: 539-21-701
Building Number: -
Drawing Number: TN-602

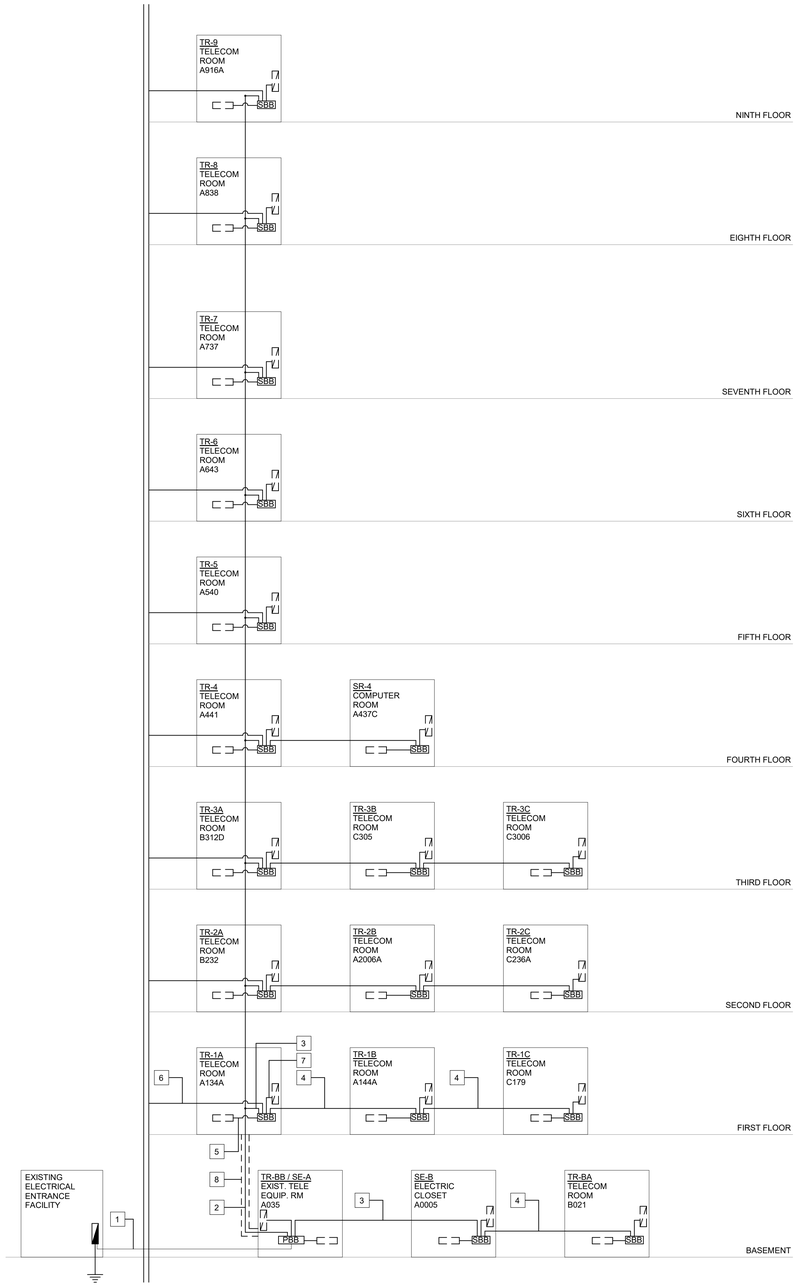

1 GROUNDING AND BONDING RISER DIAGRAM - BLDG. 1
N.T.S.

GENERAL NOTES:

1. CONTRACTOR SHALL DETERMINE CONDUCTORS SIZE ACCORDING TO NEC 70 AND ANSI/TIA-607-D.
2. CONTRACTOR SHALL SUBMIT SHOP DRAWINGS AND CALCULATIONS TO COR FOR APPROVAL ACCORDING TO SECTION 01 33 23 AND 27 05 11.
3. CONTRACTOR SHALL PROVIDE AND INSTALL BONDING BUS BARS AND CONDUCTORS AS INDICATED.
4. CONTRACTOR SHALL PROVIDE AND INSTALL EQUIPMENT RACK AND CABINET GROUND BARS, BONDING CONDUCTORS, AND CONNECTORS.

KEYED NOTES:

1. TELECOMMUNICATIONS BONDING CONDUCTOR (TBC)
2. TELECOMMUNICATIONS BONDING BACKBONE (TBB)
3. SECONDARY BONDING CONDUCTOR (SBC)
4. BACKBONE BONDING CONDUCTOR (BBC)
5. TELECOMMUNICATIONS EQUIPMENT BONDING CONDUCTOR (TEBC)
6. STRUCTURAL METAL BONDING CONDUCTOR
7. ALTERNATING CURRENT EQUIPMENT GROUND CONDUCTOR
8. VERTICAL RISER - ROOM A056A - BASEMENT - BLDG. 1
9. VERTICAL RISER - EXISTING CONDUIT PATHWAY FROM A035 TO A141A

Description	Date

CONSULTANT

Ross&Baruzzini

LOW VOLTAGE/ IT
Ross & Baruzzini Inc.
1600 Riveredge Parkway NW
Suite 900
Atlanta, GA 30328

PROJECT MANAGEMENT

HFS COMPANY

8718 Botts Lane
San Antonio, Texas 78217
Phone: (210) 816-4784
Fax: (210) 881-6808
www.hfscompany.com
jbianco@hfscompany.com

REGISTERED COMMUNICATIONS DISTRIBUTION DESIGNER
Bicsi
Paul Remley
BICSI ID # 324731
EXPIRES 12-31-23
RCDD

Construction and Facilities Management

VA U.S. Department of Veterans Affairs

Drawing Title: GROUNDING AND BONDING RISER DIAGRAM

Approved: Project Director

Phase: 100% CONSTRUCTION DOCUMENTS

FULLY SPRINKLERED

Project Title: CINCINNATI VAMC EHRM INFRASTRUCTURE UPGRADES

Project Number: 539-21-701

Building Number: C1

Location: 3200 VINE ST. CINCINNATI, OH. 45220

Drawing Number: TN-603-C.1

Issue Date: 04-MAY-2022

Checked By: PR

Drawn By: TL

Scale: N.T.S.

SECURITY SYSTEM LEGEND

				SECURITY SYSTEM		ROUGH-IN AND SUPPORT					
SYMBOL	DESCRIPTION	DETAIL	MOUNTING HEIGHT ABOVE FINISHED FLOOR, UNLESS NOTED OTHERWISE ON PLANS	SECURITY CABLING	NOTES	PROVIDE 1-GANG BACKBOX	PROVIDE 2-GANG BACKBOX	PROVIDE 1-GANG PLASTER RING	PROVIDE 2-GANG PLASTER RING	PROVIDE CONDUIT	NOTES
ACCESS CONTROL											
CR	ACCESS CONTROL CARD READER WITH KEYED SWITCH FOR OVERRIDE	1/TN-503	+44"	(1) COMM / POWER CABLE	PROVIDE KEYSWITCH AND INTEGRATE CONTROL TO THE ASSOCIATED DOOR.	--	✓	✓	--	✓	REFER TO DOOR DETAILS FOR ROUGH-IN REQUIREMENTS.
DC	DOOR CONTACT / POSITION SWITCH	--	AT DOOR	(1) COMM CABLE FOR DPS, (1) COMM/POWER CABLE FOR REX AS REQUIRED	PROVIDE DPS AND CABLE. PROVIDE ASSOCIATED REX AS REQUIRED.	--	--	--	--	✓	REFER TO DOOR DETAILS FOR ROUGH-IN REQUIREMENTS.
◇—◆	ACCESS CONTROL DOOR BARBELL. THE FILLED SIDE INDICATES THE MORE SECURE SIDE OF THE DOOR BEING CONTROLLED.	--	--	--	--	--	--	--	--	--	--
VIDEO SURVEILLANCE											
▬◂	FIXED PENDANT IP SECURITY CAMERA	1/TS-501	REFER TO SCHEDULE AND DETAILS	LOW VOLTAGE POWER IF REQUIRED FOR EXTERIOR HEATER / BLOWER	PROVIDE CAMERA AND ENCLOSURE. REFER TO CAMERA SCHEDULE.	--	--	--	--	✓	REFER TO CAMERA SCHEDULE AND DETAILS FOR ROUGH-IN REQUIREMENTS.

Description	Date

CONSULTANT

Ross&Baruzzini

LOW VOLTAGE/ IT
Ross & Baruzzini Inc.
1600 Riveredge Parkway NW
Suite 900
Atlanta, GA 30328

PROJECT MANAGEMENT

HFS COMPANY
8718 Botts Lane
San Antonio, Texas 78217
www.hfscompany.com
jbianco@hfscompany.com
Phone: (210) 816-4784
Fax: (210) 881-6808

MICHAEL A. SHEPARD
NUMBER PE-2016046006
5/4/22

Construction and Facilities Management

VA U.S. Department of Veterans Affairs

Drawing Title: SECURITY LEGEND	Phase: 100% CONSTRUCTION DOCUMENTS	Project Title: CINCINNATI VAMC EHRM INFRASTRUCTURE UPGRADES	Project Number: 539-21-701
Approved: Project Director	FULLY SPRINKLERED	Location: 3200 VINE ST. CINCINNATI, OH. 45220	Building Number:
		Issue Date: 04-MAY-2022 / Scale: 12" = 1'-0" / Checked By: MS / Drawn By: TL	Drawing Number: TS-000

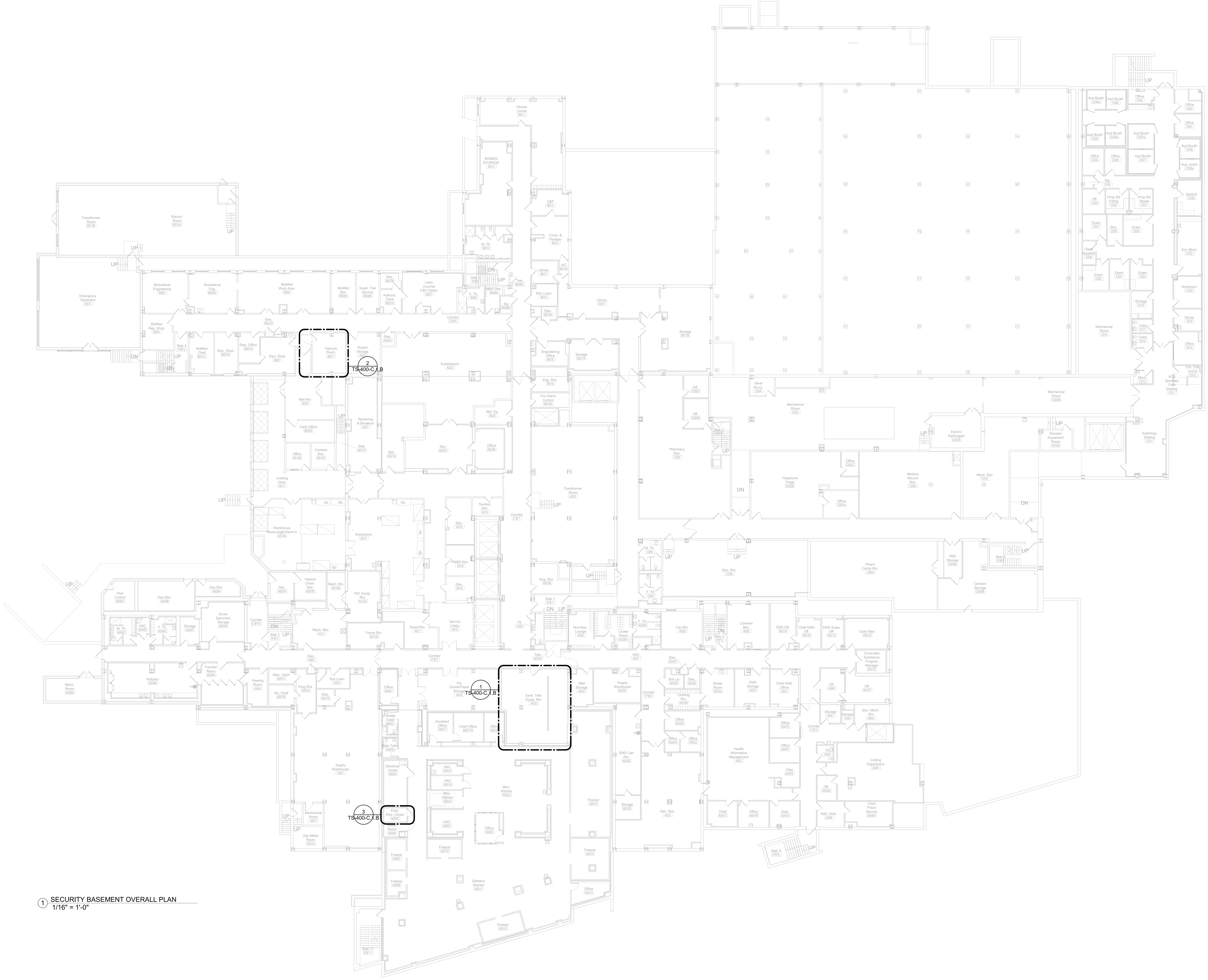

1 SECURITY BASEMENT OVERALL PLAN
1/16" = 1'-0"

TRUE NORTH PLAN NORTH

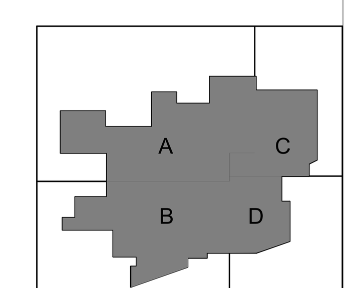

KEYPLAN

Description	Date

CONSULTANT

Ross&Baruzzini

LOW VOLTAGE/ IT
Ross & Baruzzini Inc.
1600 Riveredge Parkway NW
Suite 900
Atlanta, GA 30328

PROJECT MANAGEMENT

HFS COMPANY

8718 Botts Lane
San Antonio, Texas 78217
www.hfscompany.com
jbianco@hfscompany.com
Phone: (210) 816-4784
Fax: (210) 881-6808

STATE OF MISSOURI MICHAEL S. SHEPARD NUMBER PE-2016040096 PROFESSIONAL ENGINEER 5/4/22

Construction and Facilities Management

VA U.S. Department of Veterans Affairs

Drawing Title SECURITY BASEMENT OVERALL PLAN

Approved: Project Director

Phase 100% CONSTRUCTION DOCUMENTS

FULLY SPRINKLERED

Project Title CINCINNATI VAMC EHRM INFRASTRUCTURE UPGRADES

Location 3200 VINE ST. CINCINNATI, OH. 45220

Issue Date: 04-MAY-2022

Scale: 1/16" = 1'-0"

Checked By: MS

Drawn By: TL

Project Number 539-21-701

Building Number C1

Drawing Number TS-110-C.1.B

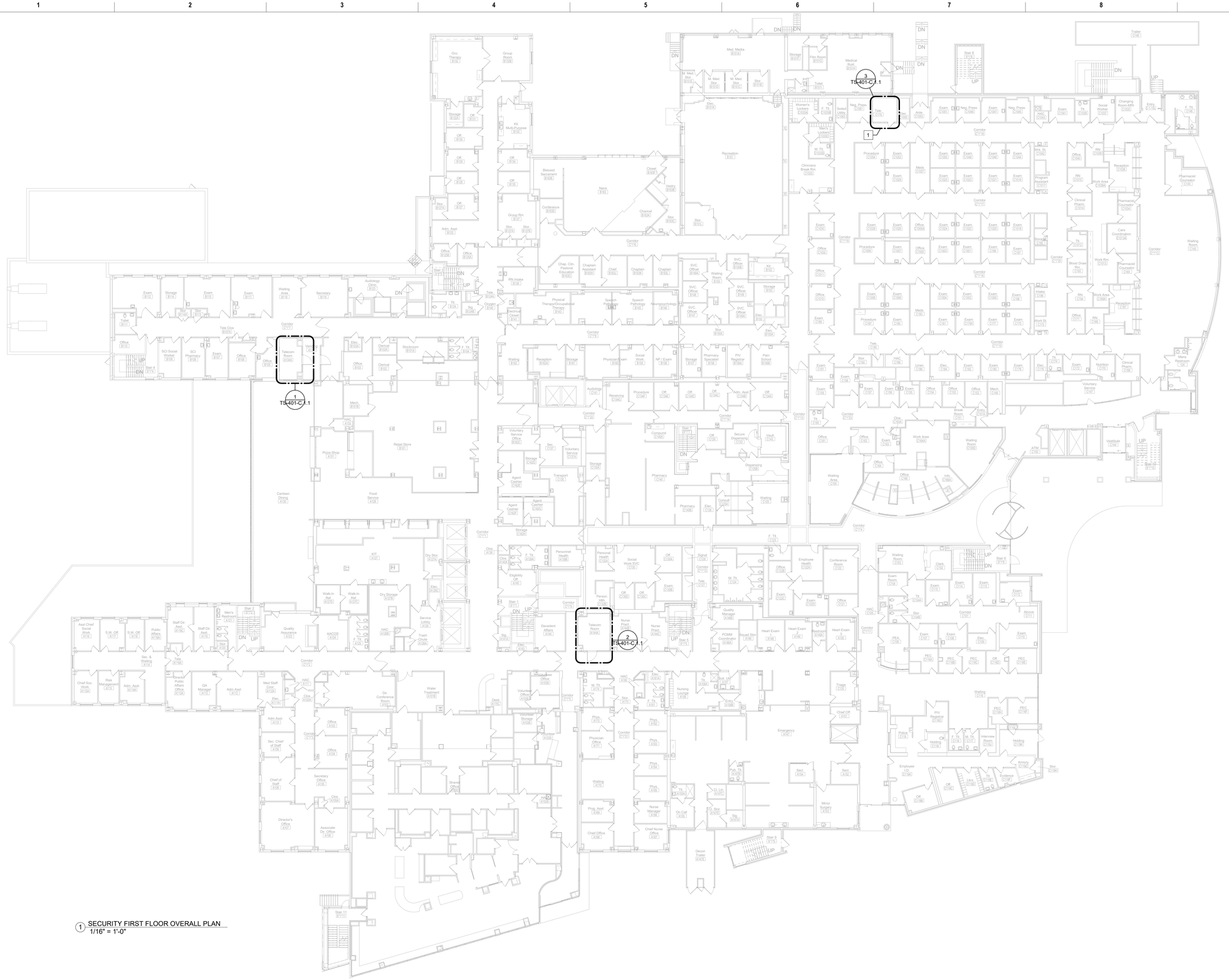

1 SECURITY FIRST FLOOR OVERALL PLAN
1/16" = 1'-0"

#	KEYED NOTES:
1.	FINAL TR LOCATION TO BE DETERMINIED BY A CONCURRENT PROJECT. COORDINATE SECURITY DEVICE PLACEMENT WITH FINAL TR LOCATION.

TRUE NORTH PLAN NORTH

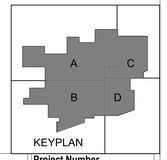

Description	Date

CONSULTANT

Ross&Baruzzini

LOW VOLTAGE/ IT
Ross & Baruzzini Inc.
1600 Riveredge Parkway NW
Suite 900
Atlanta, GA 30328

PROJECT MANAGEMENT

HFS COMPANY

8718 Botts Lane
San Antonio, Texas 78217
www.hfscompany.com
jbianco@hfscompany.com
Phone: (210) 816-4784
Fax: (210) 881-6808

MICHAEL S. SHEPARD NUMBER PE-20140000 5/4/22

Construction and Facilities Management

VA U.S. Department of Veterans Affairs

Drawing Title: SECURITY FIRST FLOOR OVERALL PLAN	Phase: 100% CONSTRUCTION DOCUMENTS	Project Title: CINCINNATI VAMC EHRM INFRASTRUCTURE UPGRADES	Project Number: 539-21-701
Approved: Project Director	FULLY SPRINKLERED	Location: 3200 VINE ST. CINCINNATI, OH. 45220	Building Number: C1
		Issue Date: 04-MAY-2022 / Checked By: MS / Drawn By: TL	Drawing Number: TS-120-C.1.1
		Scale: 1/16" = 1'-0"	

1 SECURITY SECOND FLOOR OVERALL PLAN
1/16" = 1'-0"

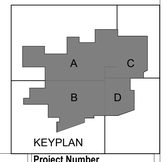

TRUE NORTH PLAN NORTH

Description	Date

CONSULTANT

Ross&Baruzzini

LOW VOLTAGE/ IT
Ross & Baruzzini Inc.
1600 Riveredge Parkway NW
Suite 900
Atlanta, GA 30328

PROJECT MANAGEMENT

HFS COMPANY
8718 Botts Lane
San Antonio, Texas 78217
www.hfscompany.com
jbianco@hfscompany.com
Phone: (210) 816-4784
Fax: (210) 881-6808

MICHAEL S. SHEPARD NUMBER PE-20140038-A 5/4/22

Construction and Facilities Management

VA U.S. Department of Veterans Affairs

Drawing Title	Phase	Project Title	Project Number
SECURITY SECOND FLOOR OVERALL PLAN	100% CONSTRUCTION DOCUMENTS	CINCINNATI VAMC EHRM INFRASTRUCTURE UPGRADES	539-21-701
Approved: Project Director	FULLY SPRINKLERED	Location: 3200 VINE ST. CINCINNATI, OH. 45220	Building Number: C1
		Issue Date: 04-MAY-2022 / Checked By: MS / Drawn By: TL	Drawing Number: TS-130-C.1.2
		Scale: 1/16" = 1'-0"	

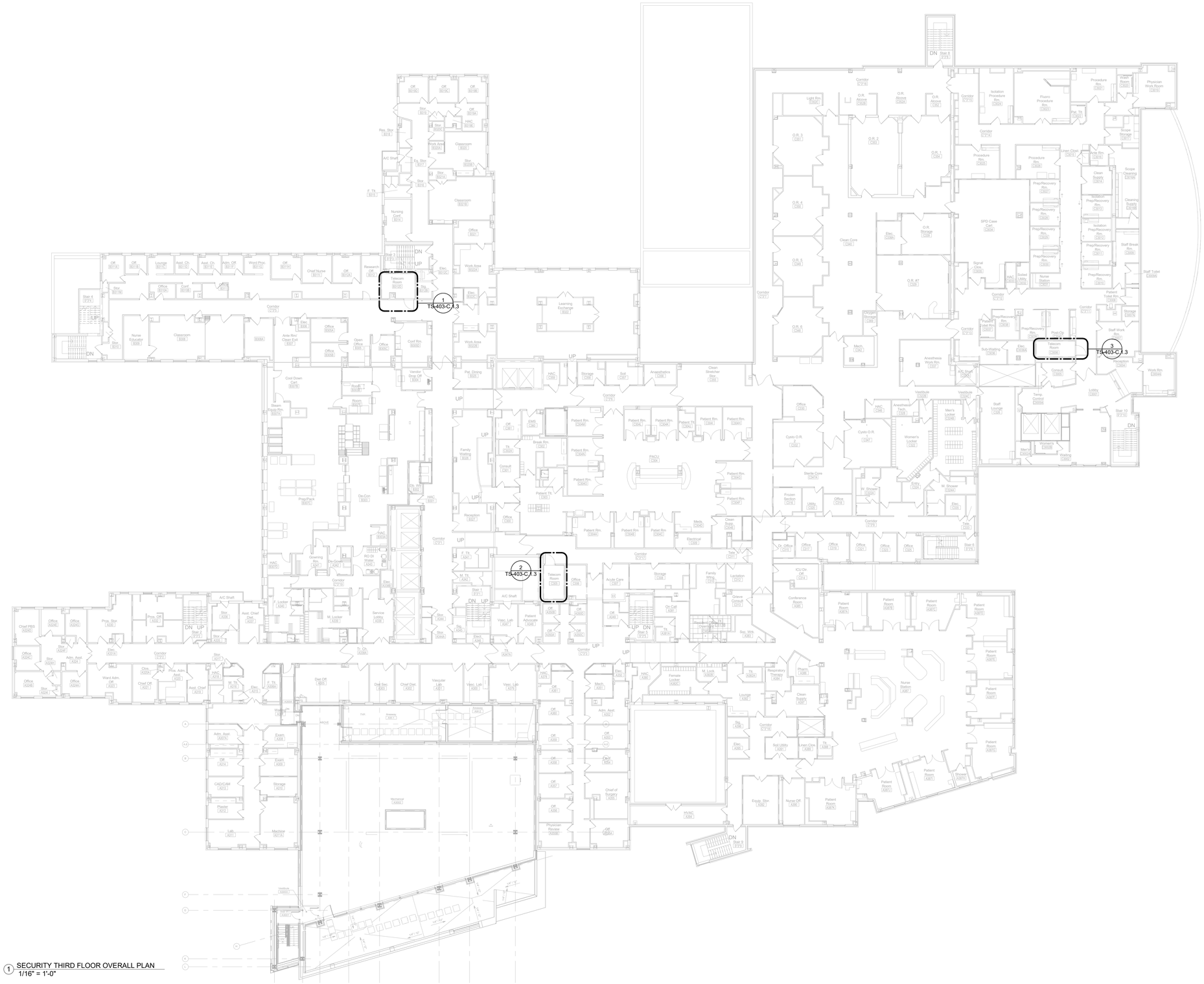

1 SECURITY THIRD FLOOR OVERALL PLAN
1/16" = 1'-0"

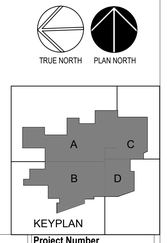

Description	Date

CONSULTANT

Ross&Baruzzini

LOW VOLTAGE/ IT
Ross & Baruzzini Inc.
1600 Riveredge Parkway NW
Suite 900
Atlanta, GA 30328

PROJECT MANAGEMENT

HFS COMPANY

8718 Botts Lane
San Antonio, Texas 78217
www.hfscompany.com
jbianco@hfscompany.com

Phone: (210) 816-4784
Fax: (210) 881-6808

MICHAEL S. SIBRAN
NUMBER
PE2016010095
5/4/22

Construction and Facilities Management

VA U.S. Department of Veterans Affairs

Drawing Title: SECURITY THIRD FLOOR OVERALL PLAN	Phase: 100% CONSTRUCTION DOCUMENTS	Project Title: CINCINNATI VAMC EHRM INFRASTRUCTURE UPGRADES	Project Number: 539-21-701
			Building Number: C1
Approved: Project Director	FULLY SPRINKLERED	Location: 3200 VINE ST. CINCINNATI, OH. 45220	Drawing Number: TS-140-C.1.3
		Issue Date: 04-MAY-2022 / Checked By: MS / Drawn By: TL	
		Scale: 1/16" = 1'-0"	

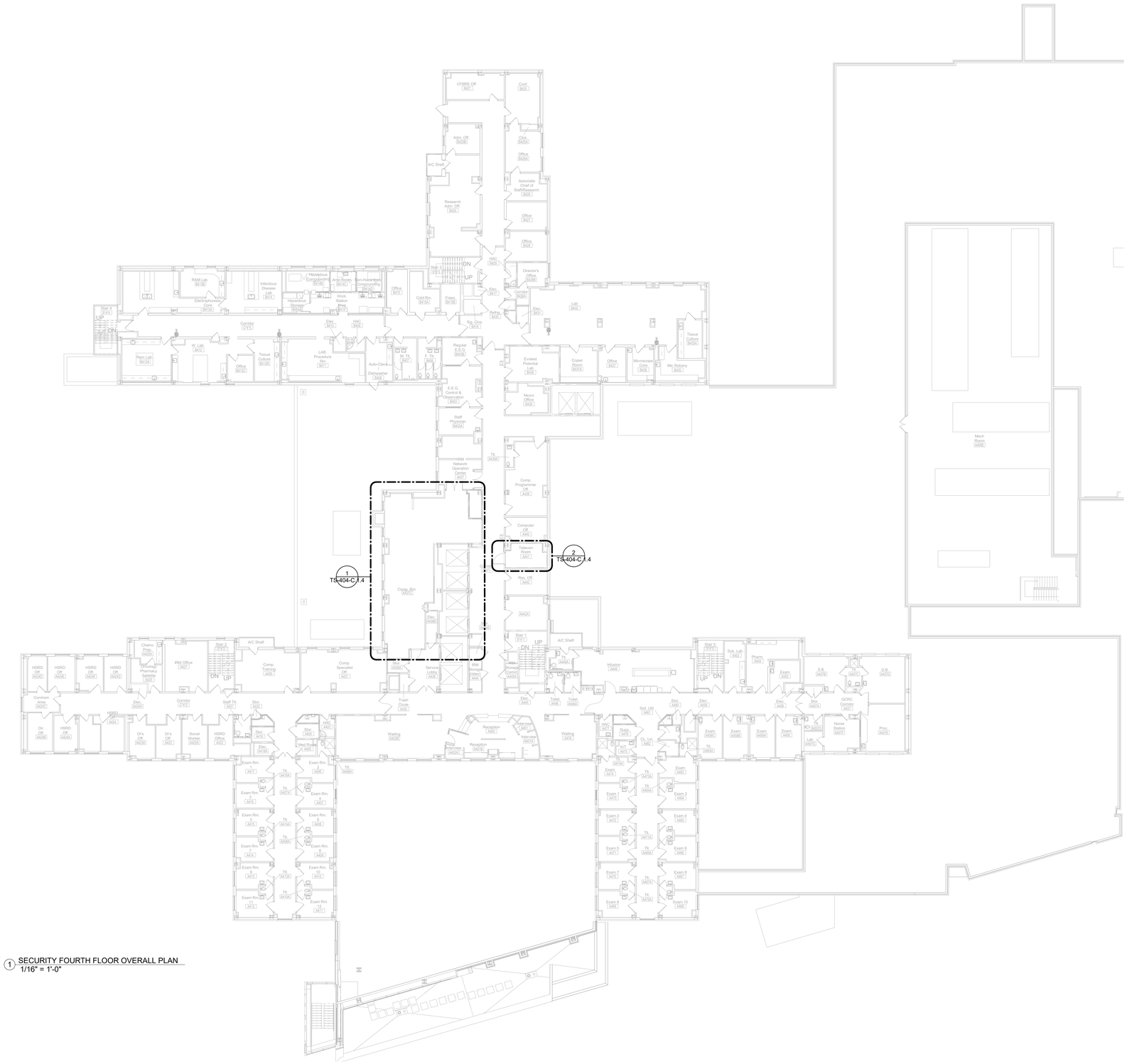

1 SECURITY FOURTH FLOOR OVERALL PLAN
1/16" = 1'-0"

TRUE NORTH

PLAN NORTH

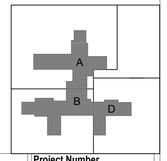

Description	Date

CONSULTANT

Ross&Baruzzini

LOW VOLTAGE/ IT
Ross & Baruzzini Inc.
1600 Riveredge Parkway NW
Suite 900
Atlanta, GA 30328

PROJECT MANAGEMENT

HFS COMPANY

8718 Botts Lane
San Antonio, Texas 78217
www.hfscompany.com
jbianco@hfscompany.com

Phone: (210) 816-4784
Fax: (210) 881-6808

MICHAEL S. KIRKPATRICK
NUMBER
PE-2016016395
5/4/22

Construction and Facilities Management

VA U.S. Department of Veterans Affairs

Drawing Title: SECURITY FOURTH FLOOR OVERALL PLAN	Phase: 100% CONSTRUCTION DOCUMENTS	Project Title: CINCINNATI VAMC EHRM INFRASTRUCTURE UPGRADES	Project Number: 539-21-701
Approved: Project Director	FULLY SPRINKLERED	Location: 3200 VINE ST. CINCINNATI, OH. 45220	Building Number: C1
		Issue Date: 04-MAY-2022 / Checked By: MS / Drawn By: TL	Drawing Number: TS-150-C.1.4
		Scale: 1/16" = 1'-0"	

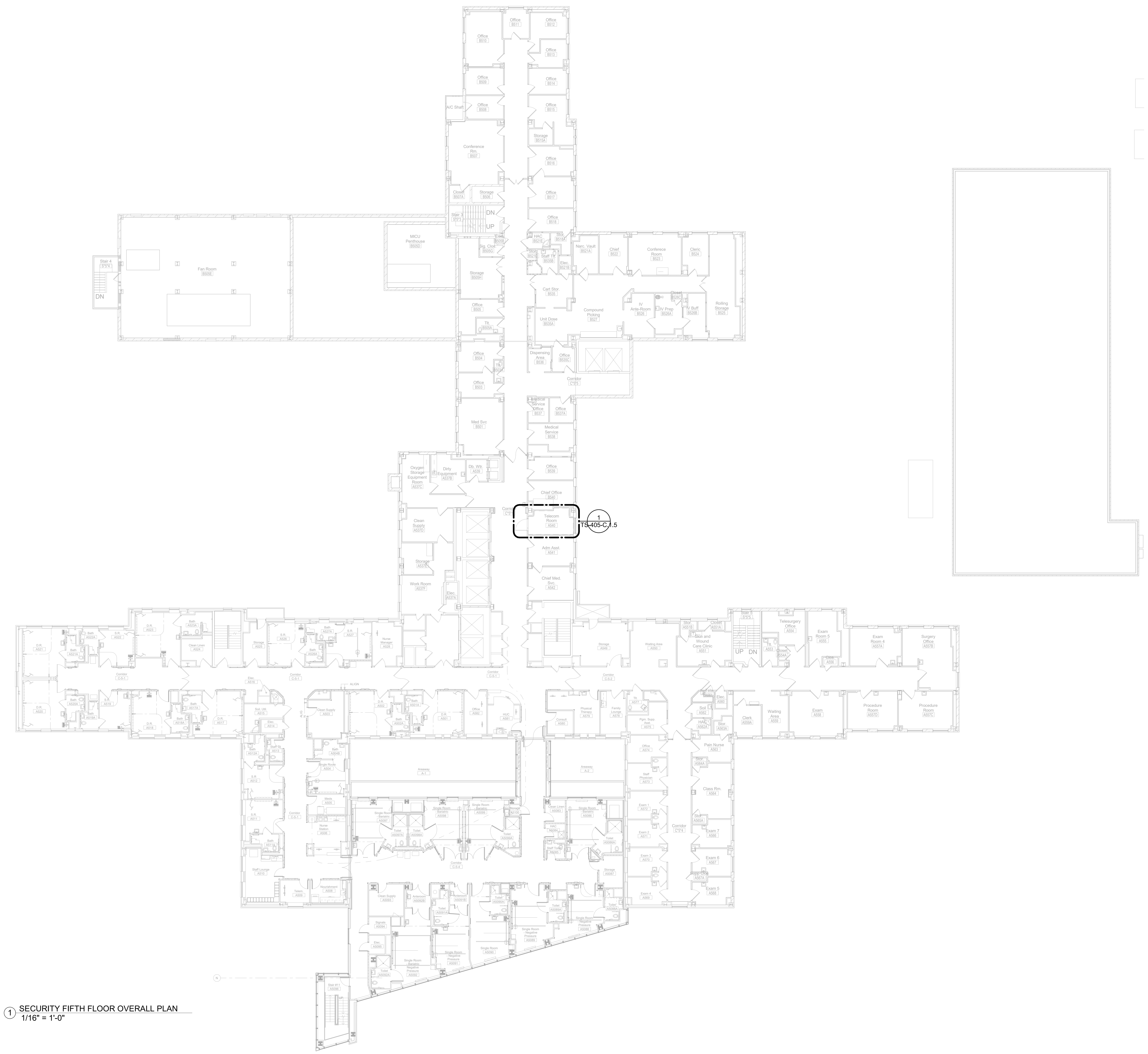

1 SECURITY FIFTH FLOOR OVERALL PLAN
1/16" = 1'-0"

TRUE NORTH PLAN NORTH

Description	Date

CONSULTANT

Ross&Baruzzini

LOW VOLTAGE/ IT
Ross & Baruzzini Inc.
1600 Riveredge Parkway NW
Suite 900
Atlanta, GA 30328

PROJECT MANAGEMENT

HFS COMPANY
8718 Botts Lane
San Antonio, Texas 78217
www.hfscompany.com
jbianco@hfscompany.com
Phone: (210) 816-4784
Fax: (210) 881-6808

STATE OF MISSOURI — MICHAEL S. SHEPARD — NUMBER PE-2016040096 — PROFESSIONAL ENGINEER — 5/4/22

Construction and Facilities Management

VA U.S. Department of Veterans Affairs

Drawing Title
SECURITY FIFTH FLOOR OVERALL PLAN

Approved: Project Director

Phase
100% CONSTRUCTION DOCUMENTS

FULLY SPRINKLERED

Project Title
CINCINNATI VAMC EHRM INFRASTRUCTURE UPGRADES

Location 3200 VINE ST. CINCINNATI, OH. 45220

Issue Date: 04-MAY-2022
Scale: 1/16" = 1'-0"
Checked By: MS
Drawn By: TL

Project Number 539-21-701
Building Number C1
Drawing Number TS-160-C.1.5

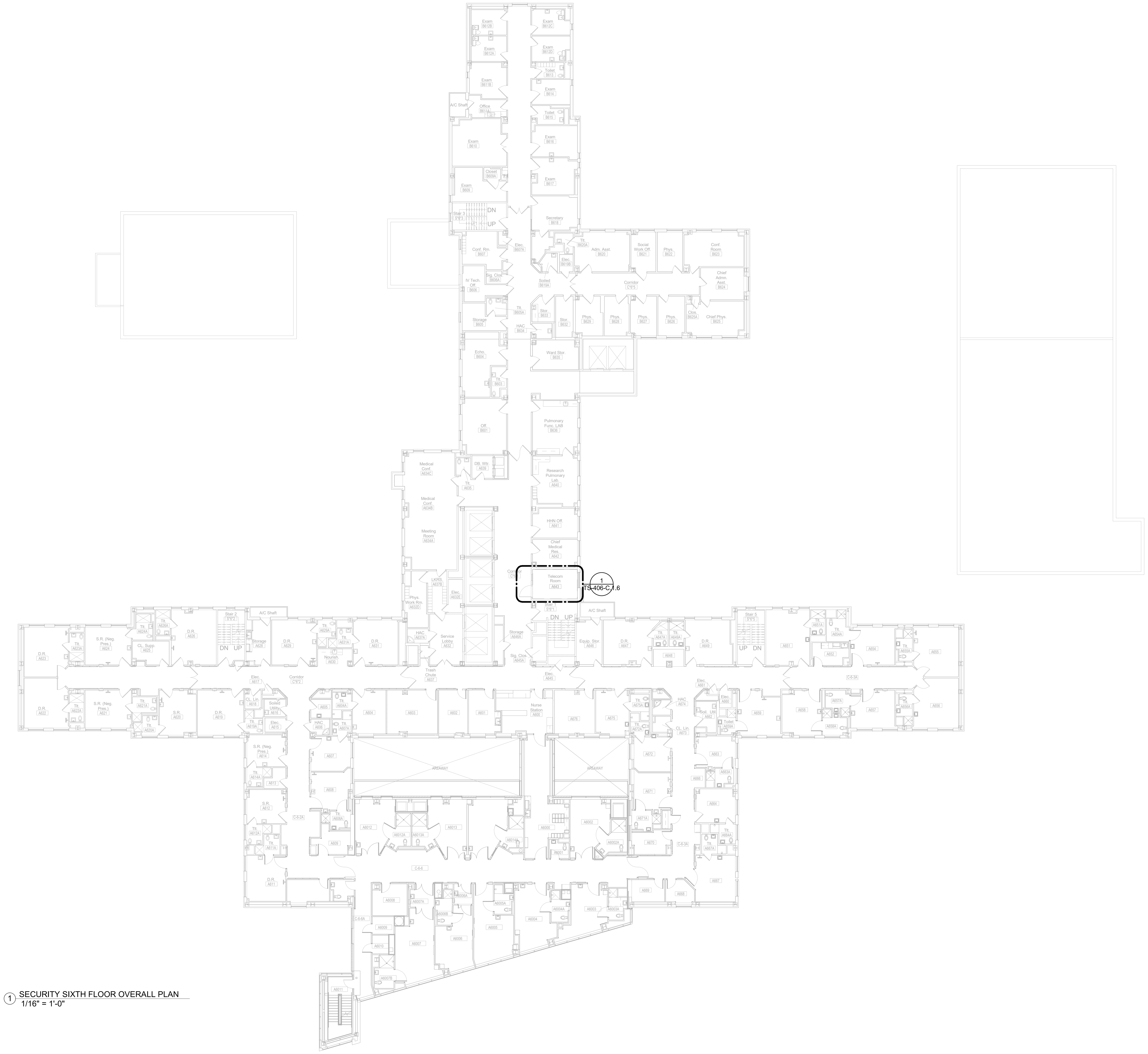

1 SECURITY SIXTH FLOOR OVERALL PLAN
1/16" = 1'-0"

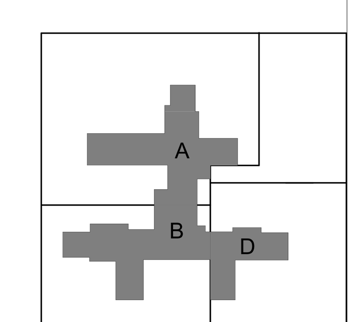

TRUE NORTH PLAN NORTH

Description	Date

CONSULTANT

Ross&Baruzzini

LOW VOLTAGE/ IT
Ross & Baruzzini Inc.
1600 Riveredge Parkway NW
Suite 900
Atlanta, GA 30328

PROJECT MANAGEMENT

HFS COMPANY
8718 Botts Lane
San Antonio, Texas 78217
www.hfscompany.com
jbianco@hfscompany.com
Phone: (210) 816-4784
Fax: (210) 881-6808

STATE OF MISSOURI
MICHAEL S. SHEPARD
NUMBER PE-2016040096
PROFESSIONAL ENGINEER
5/4/22

Construction and Facilities Management

VA U.S. Department of Veterans Affairs

Drawing Title
SECURITY SIXTH FLOOR OVERALL PLAN

Approved: Project Director

Phase
100% CONSTRUCTION DOCUMENTS

FULLY SPRINKLERED

Project Title
CINCINNATI VAMC EHRM INFRASTRUCTURE UPGRADES

Location
3200 VINE ST. CINCINNATI, OH. 45220

Issue Date:
04-MAY-2022

Scale: 1/16" = 1'-0"

Checked By:
MS

Drawn By:
TL

Project Number
539-21-701

Building Number
C1

Drawing Number
TS-170-C.1.6

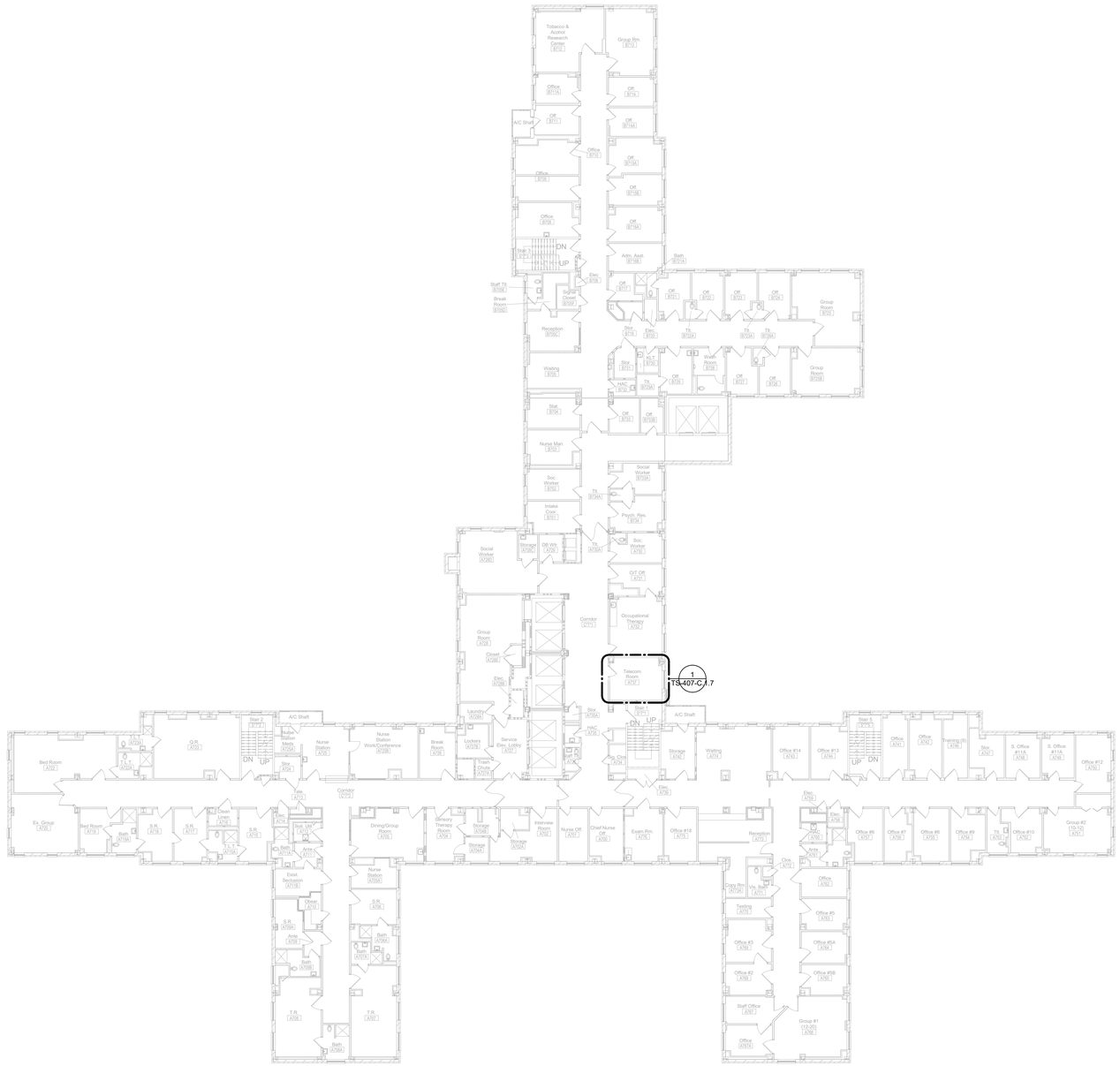

1 SECURITY SEVENTH FLOOR OVERALL PLAN
1/16" = 1'-0"

TRUE NORTH PLAN NORTH

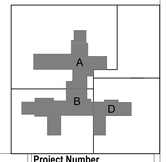

Description	Date

CONSULTANT

Ross&Baruzzini

LOW VOLTAGE/ IT
Ross & Baruzzini Inc.
1600 Riveredge Parkway NW
Suite 900
Atlanta, GA 30328

PROJECT MANAGEMENT

HFS COMPANY

8718 Botts Lane
San Antonio, Texas 78217
www.hfscompany.com
jbianco@hfscompany.com

Phone: (210) 816-4784
Fax: (210) 881-6808

MICHAEL S. SHEPARD
NUMBER
PE-20140018-0
5/4/22

Construction and Facilities Management

VA U.S. Department of Veterans Affairs

Drawing Title: SECURITY SEVENTH FLOOR OVERALL PLAN

Approved: Project Director

Phase: 100% CONSTRUCTION DOCUMENTS

FULLY SPRINKLERED

Project Title: CINCINNATI VAMC EHRM INFRASTRUCTURE UPGRADES

Location: 3200 VINE ST. CINCINNATI, OH. 45220

Issue Date: 04-MAY-2022

Scale: 1/16" = 1'-0"

Checked By: MS

Drawn By: TL

Project Number: 539-21-701

Building Number: C1

Drawing Number: TS-180-C.1.7

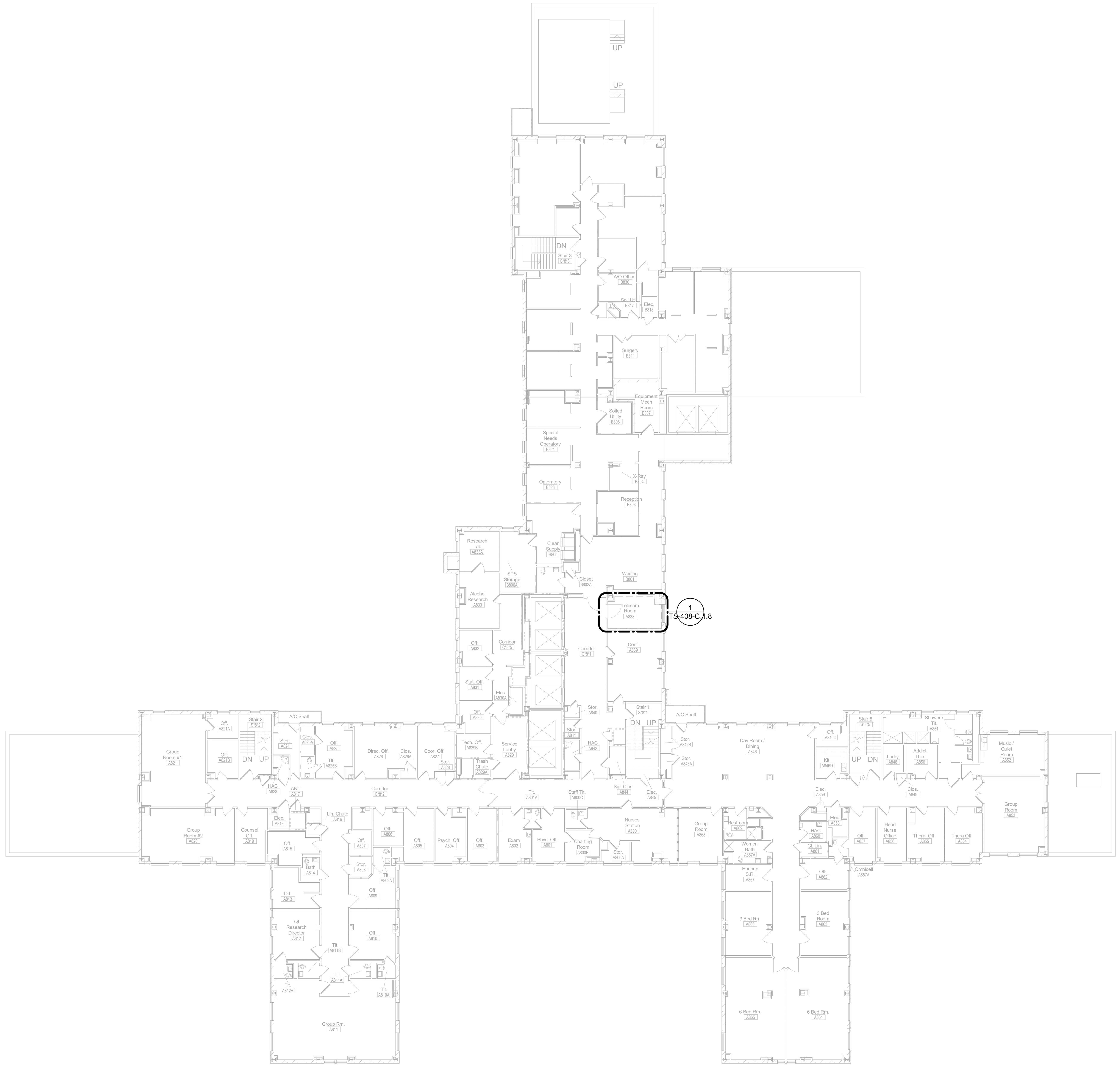

1 SECURITY EIGHTH FLOOR OVERALL PLAN
1/16" = 1'-0"

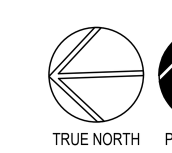

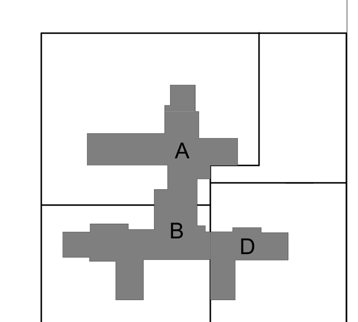

Description	Date

CONSULTANT

Ross&Baruzzini
LOW VOLTAGE/ IT
Ross & Baruzzini Inc.
1600 Riveredge Parkway NW
Suite 900
Atlanta, GA 30328

PROJECT MANAGEMENT

HFS COMPANY
8718 Botts Lane
San Antonio, Texas 78217
www.hfscompany.com
jbianco@hfscompany.com
Phone: (210) 816-4784
Fax: (210) 881-6808

STATE OF MISSOURI
MICHAEL S. SHEPARD
NUMBER PE-2016040096
PROFESSIONAL ENGINEER
5/4/22

Construction and Facilities Management

VA U.S. Department of Veterans Affairs

Drawing Title
SECURITY EIGHTH FLOOR OVERALL PLAN

Approved: Project Director

Phase
100% CONSTRUCTION DOCUMENTS

FULLY SPRINKLERED

Project Title
CINCINNATI VAMC EHRM INFRASTRUCTURE UPGRADES

Location 3200 VINE ST. CINCINNATI, OH. 45220

Issue Date: 04-MAY-2022
Scale: 1/16" = 1'-0"
Checked By: MS
Drawn By: TL

Project Number 539-21-701
Building Number C1
Drawing Number TS-190-C.1.8

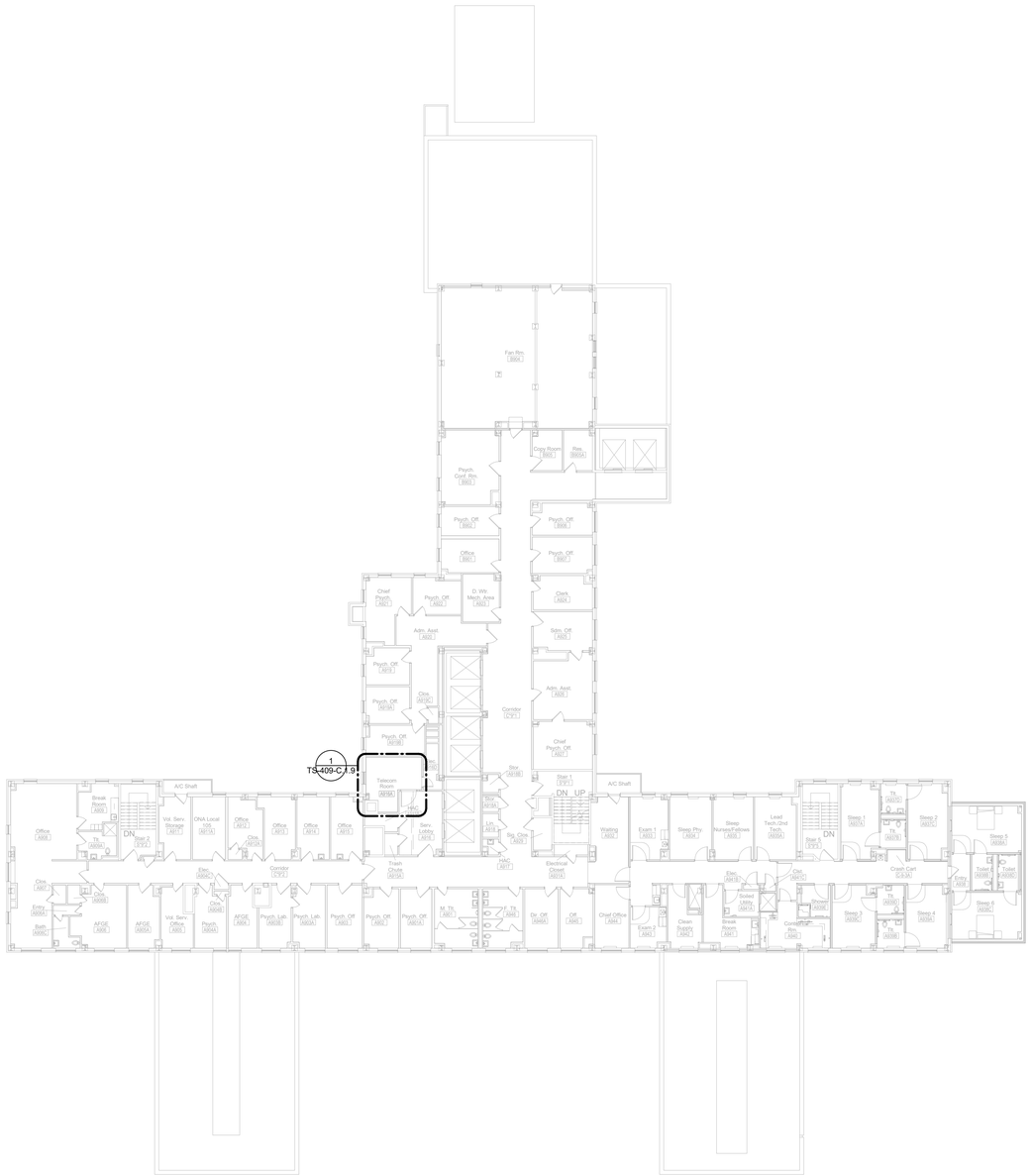

1 SECURITY NINTH FLOOR OVERALL PLAN
1/16" = 1'-0"

TRUE NORTH PLAN NORTH

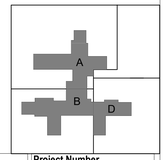

Description	Date

CONSULTANT

Ross&Baruzzini

LOW VOLTAGE/ IT
Ross & Baruzzini Inc.
1600 Riveredge Parkway NW
Suite 900
Atlanta, GA 30328

PROJECT MANAGEMENT

HFS COMPANY

8718 Botts Lane
San Antonio, Texas 78217
www.hfscompany.com
jbianco@hfscompany.com
Phone: (210) 816-4784
Fax: (210) 881-6808

MICHAEL A. SHEPHERD
NUMBER
PE-2016046206
5/4/22

Construction and Facilities Management

VA U.S. Department of Veterans Affairs

Drawing Title
SECURITY NINTH FLOOR OVERALL PLAN

Approved: Project Director

Phase
100% CONSTRUCTION DOCUMENTS

FULLY SPRINKLERED

Project Title
CINCINNATI VAMC EHRM INFRASTRUCTURE UPGRADES

Location
3200 VINE ST. CINCINNATI, OH. 45220

Issue Date: 04-MAY-2022
Scale: 1/16" = 1'-0"
Checked By: MS
Drawn By: TL

Project Number 539-21-701
Building Number C1
Drawing Number TS-200-C.1.9

1 SECURITY BLDG 2 BASEMENT OVERALL PLAN
3/32" = 1'-0"

TRUE NORTH PLAN NORTH

Description	Date

CONSULTANT

Ross&Baruzzini

LOW VOLTAGE/ IT
Ross & Baruzzini Inc.
1600 Riveredge Parkway NW
Suite 900
Atlanta, GA 30328

PROJECT MANAGEMENT

HFS COMPANY

8718 Botts Lane
San Antonio, Texas 78217
www.hfscompany.com
jbianco@hfscompany.com
Phone: (210) 816-4784
Fax: (210) 881-6808

MICHAEL S. MOSKOWITZ
STATE OF OHIO
PE-2016060396
5/4/22

Construction and Facilities Management

VA U.S. Department of Veterans Affairs

Drawing Title: BLDG. 2 - SECURITY BASEMENT OVERALL PLAN

Approved: Project Director

Phase: 100% CONSTRUCTION DOCUMENTS

FULLY SPRINKLERED

Project Title: CINCINNATI VAMC EHRM INFRASTRUCTURE UPGRADES

Location: 3200 VINE ST. CINCINNATI, OH. 45220

Issue Date: 04-MAY-2022

Scale: 3/32" = 1'-0"

Checked By: MS

Drawn By: TL

Project Number: 539-21-701

Building Number: C2

Drawing Number: TS-210-C.2.B

1 SECURITY BLDG 2 FIRST FLOOR OVERALL PLAN
3/32" = 1'-0"

TRUE NORTH PLAN NORTH

Description	Date

CONSULTANT

Ross&Baruzzini

LOW VOLTAGE/ IT
Ross & Baruzzini Inc.
1600 Riveredge Parkway NW
Suite 900
Atlanta, GA 30328

PROJECT MANAGEMENT

HFS COMPANY
8718 Botts Lane
San Antonio, Texas 78217
www.hfscompany.com
jbianco@hfscompany.com
Phone: (210) 816-4784
Fax: (210) 881-6808

MICHAEL S. SCHUMPERT
REGISTERED
PE-2016046096
5/4/22

Construction and Facilities Management

VA U.S. Department of Veterans Affairs

Drawing Title: BLDG. 2 - SECURITY FIRST FLOOR OVERALL PLAN	Phase: 100% CONSTRUCTION DOCUMENTS	Project Title: CINCINNATI VAMC EHRM INFRASTRUCTURE UPGRADES	Project Number: 539-21-701
Approved: Project Director	FULLY SPRINKLERED	Location: 3200 VINE ST. CINCINNATI, OH. 45220	Building Number: C2
		Issue Date: 04-MAY-2022 / Checked By: MS / Drawn By: TL	Drawing Number: TS-211-C.2.1
		Scale: 3/32" = 1'-0"	

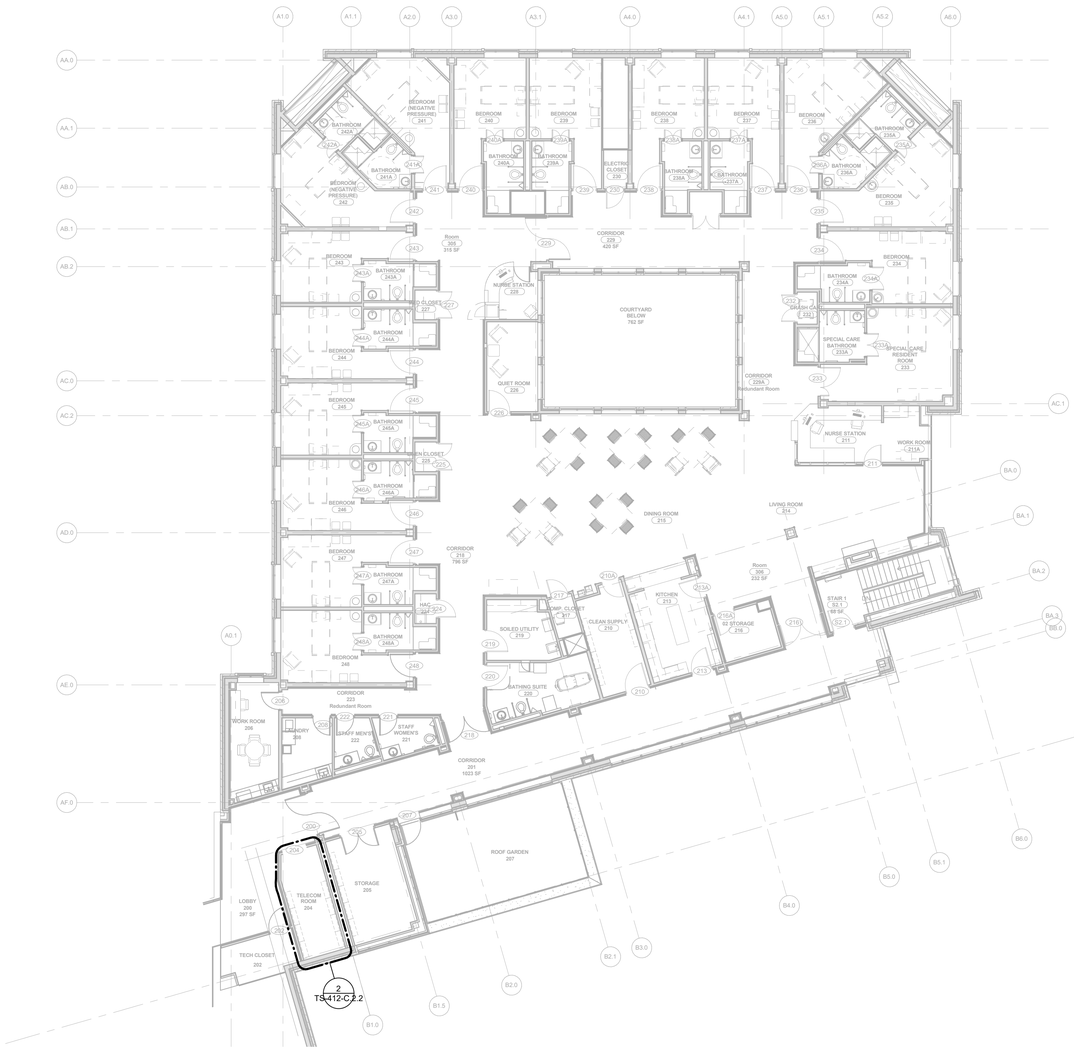

1 SECURITY BLDG 2 SECOND FLOOR OVERALL PLAN
3/32" = 1'-0"

TRUE NORTH PLAN NORTH

Description	Date

CONSULTANT

Ross&Baruzzini

LOW VOLTAGE/ IT
Ross & Baruzzini Inc.
1600 Riveredge Parkway NW
Suite 900
Atlanta, GA 30328

PROJECT MANAGEMENT

HFS COMPANY

8718 Botts Lane
San Antonio, Texas 78217
www.hfscompany.com
jbianco@hfscompany.com
Phone: (210) 816-4784
Fax: (210) 881-6808

MICHAEL A. MARTINEZ LICENSED PROFESSIONAL ENGINEER PE-2016042006 5/4/22

Construction and Facilities Management

VA U.S. Department of Veterans Affairs

Drawing Title BLDG. 2 - SECURITY SECOND FLOOR OVERALL PLAN	**Phase** 100% CONSTRUCTION DOCUMENTS	**Project Title** CINCINNATI VAMC EHRM INFRASTRUCTURE UPGRADES	**Project Number** 539-21-701
Approved: Project Director	FULLY SPRINKLERED	**Location** 3200 VINE ST. CINCINNATI, OH. 45220	**Building Number** C2
		Issue Date: 04-MAY-2022 / **Checked By:** MS / **Drawn By:** TL / **Scale:** 3/32" = 1'-0"	**Drawing Number** TS-212-C.2.2

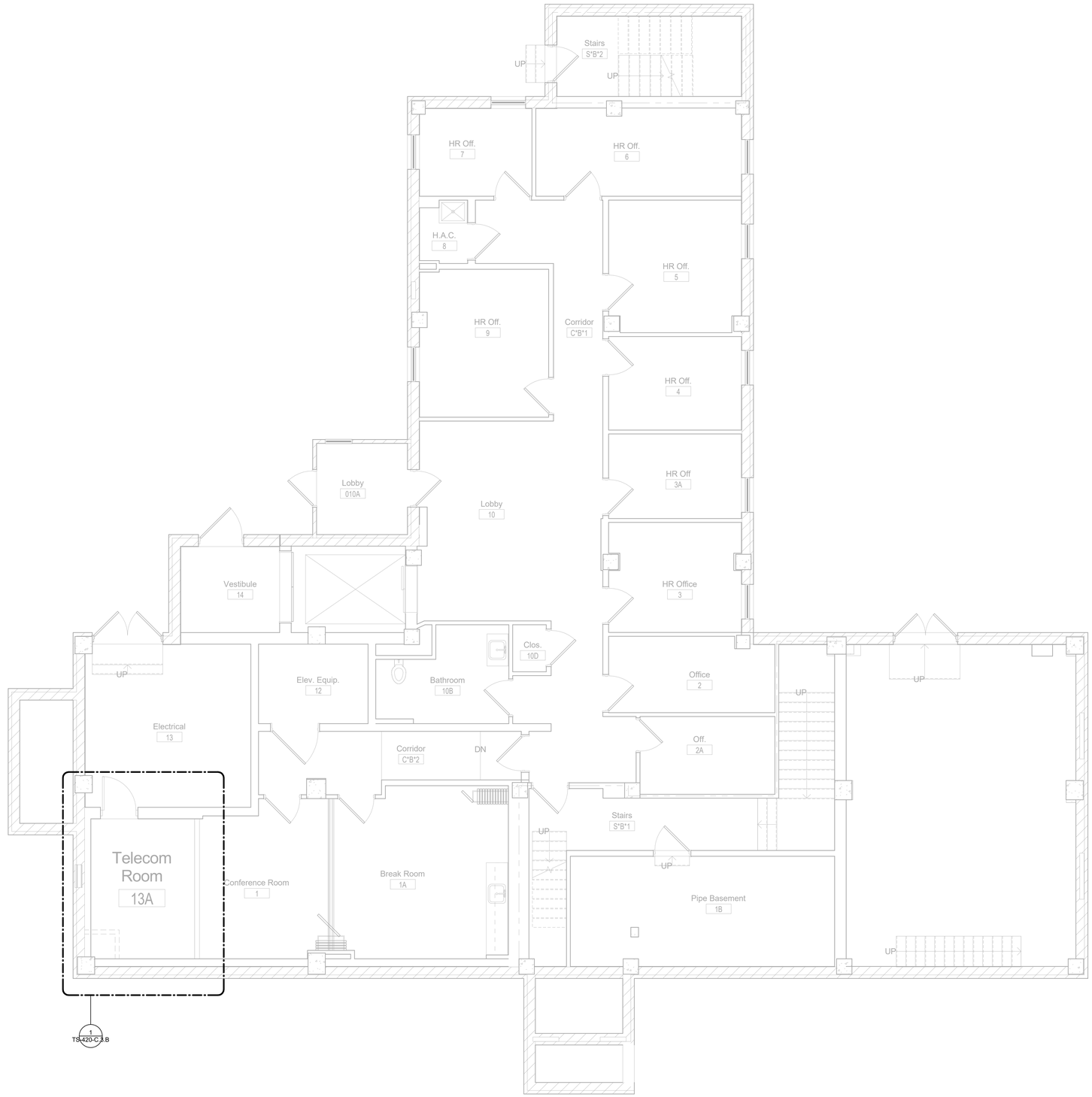

1 SECURITY BLDG 3 BASEMENT OVERALL PLAN
1/4" = 1'-0"

TRUE NORTH PLAN NORTH

Description	Date

CONSULTANT

Ross&Baruzzini

LOW VOLTAGE/ IT
Ross & Baruzzini Inc.
1600 Riveredge Parkway NW
Suite 900
Atlanta, GA 30328

PROJECT MANAGEMENT

HFS COMPANY

8718 Botts Lane
San Antonio, Texas 78217
www.hfscompany.com
jbianco@hfscompany.com

Phone: (210) 816-4784
Fax: (210) 881-6808

MICHAEL A. MARTINEZ
LICENSED
PROFESSIONAL ENGINEER
NUMBER
PE-2016042095
5/4/22

Construction and Facilities Management

VA U.S. Department of Veterans Affairs

Drawing Title: BLDG. 3 - SECURITY BASEMENT OVERALL PLAN	Phase: 100% CONSTRUCTION DOCUMENTS	Project Title: CINCINNATI VAMC EHRM INFRASTRUCTURE UPGRADES	Project Number: 539-21-701
			Building Number: C3
Approved: Project Director	FULLY SPRINKLERED	Location: 3200 VINE ST. CINCINNATI, OH. 45220	Drawing Number: TS-220-C.3.B
		Issue Date: 04-MAY-2022 / Checked By: MS / Drawn By: TL	
		Scale: 1/4" = 1'-0"	

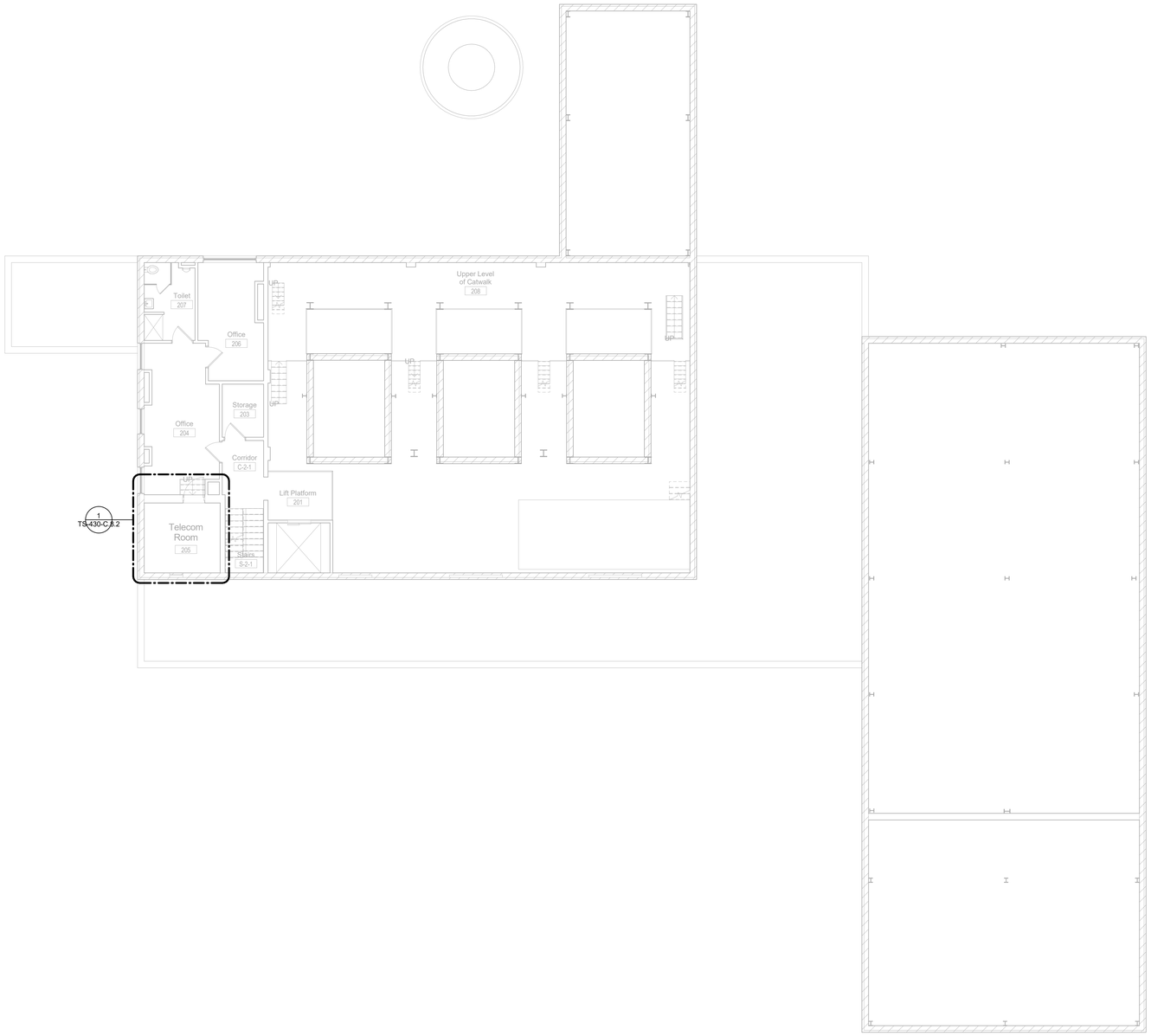

1 SECURITY BLDG 8 SECOND FLOOR OVERALL PLAN
1/8" = 1'-0"

TRUE NORTH PLAN NORTH

Description	Date

CONSULTANT

Ross&Baruzzini

LOW VOLTAGE/ IT
Ross & Baruzzini Inc.
1600 Riveredge Parkway NW
Suite 900
Atlanta, GA 30328

PROJECT MANAGEMENT

HFS COMPANY

8718 Botts Lane
San Antonio, Texas 78217
www.hfscompany.com
jbianco@hfscompany.com
Phone: (210) 816-4784
Fax: (210) 881-6808

MICHAEL A. SHEPARD
NUMBER
PE-2016046006
5/4/22

Construction and Facilities Management

VA U.S. Department of Veterans Affairs

Drawing Title
BLDG. 8 - SECURITY SECOND FLOOR OVERALL PLAN

Approved: Project Director

Phase
100% CONSTRUCTION DOCUMENTS

FULLY SPRINKLERED

Project Title
CINCINNATI VAMC EHRM INFRASTRUCTURE UPGRADES

Location
3200 VINE ST. CINCINNATI, OH. 45220

Issue Date: 04-MAY-2022
Scale: 1/8" = 1'-0"
Checked By: MS
Drawn By: TL

Project Number 539-21-701
Building Number C8
Drawing Number TS-230-C.8.2

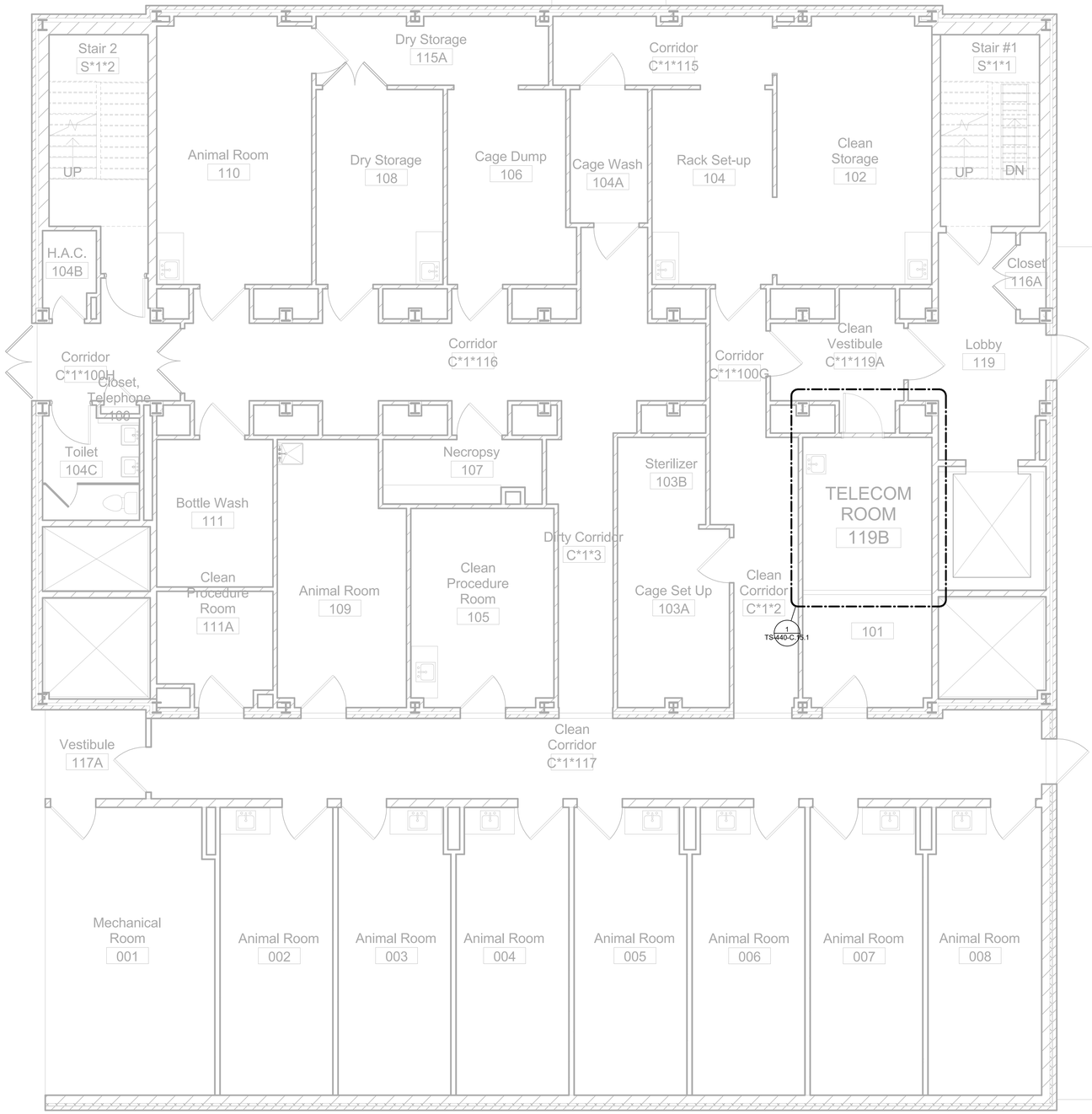

1 SECURITY BLDG 15 FIRST FLOOR OVERALL PLAN
1/4" = 1'-0"

TRUE NORTH PLAN NORTH

Description	Date

CONSULTANT

Ross&Baruzzini

LOW VOLTAGE/ IT
Ross & Baruzzini Inc.
1600 Riveredge Parkway NW
Suite 900
Atlanta, GA 30328

PROJECT MANAGEMENT

HFS COMPANY
8718 Botts Lane
San Antonio, Texas 78217
www.hfscompany.com
jbianco@hfscompany.com
Phone: (210) 816-4784
Fax: (210) 881-6808

MICHAEL S. MARTINEZ
STATE OF TEXAS
PE-20166042095
5/4/22

Construction and Facilities Management

VA U.S. Department of Veterans Affairs

Drawing Title: BLDG. 15 - SECURITY FIRST FLOOR OVERALL PLAN

Approved: Project Director

Phase: 100% CONSTRUCTION DOCUMENTS

FULLY SPRINKLERED

Project Title: CINCINNATI VAMC EHRM INFRASTRUCTURE UPGRADES

Location: 3200 VINE ST. CINCINNATI, OH. 45220

Issue Date: 04-MAY-2022

Scale: 1/4" = 1'-0"

Checked By: MS

Drawn By: TL

Project Number: 539-21-701

Building Number: C15

Drawing Number: TS-240-C.15.1

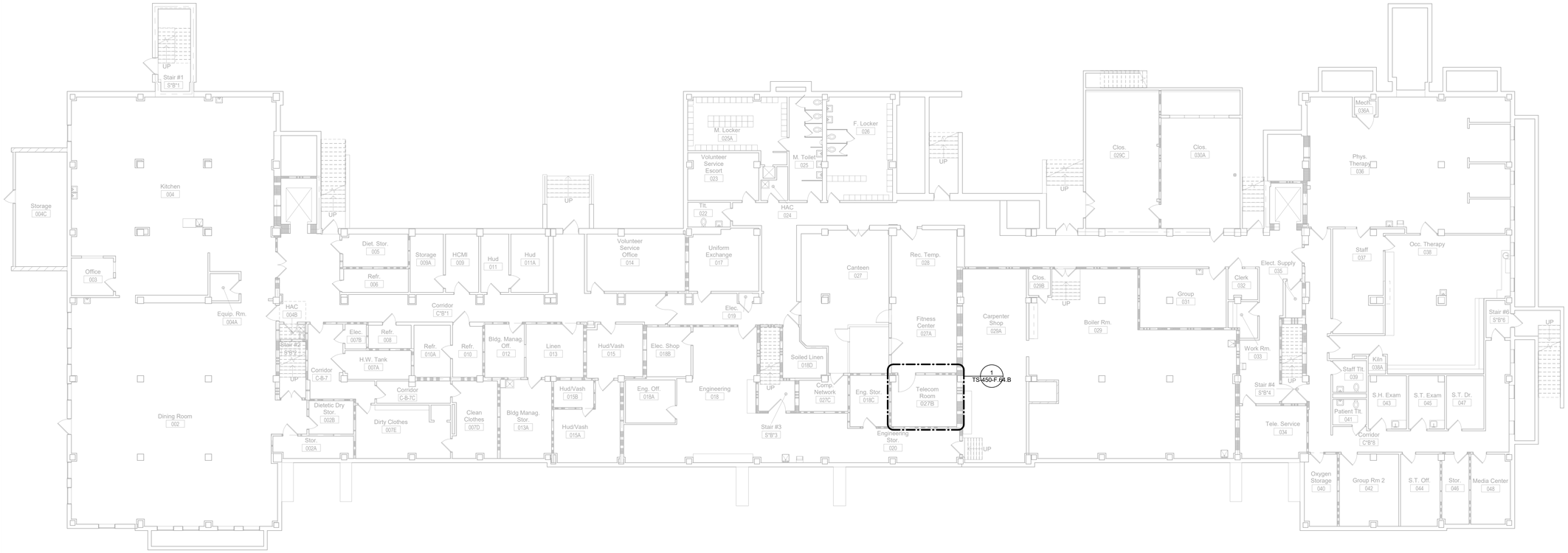

1 SECURITY BLDG 64 BASEMENT OVERALL PLAN
3/32" = 1'-0"

TRUE NORTH PLAN NORTH

Description	Date

CONSULTANT

Ross&Baruzzini

LOW VOLTAGE/ IT
Ross & Baruzzini Inc.
1600 Riveredge Parkway NW
Suite 900
Atlanta, GA 30328

PROJECT MANAGEMENT

HFS COMPANY

8718 Botts Lane
San Antonio, Texas 78217
www.hfscompany.com
jbianco@hfscompany.com
Phone: (210) 816-4784
Fax: (210) 881-6808

STATE OF MISSOURI
MICHAEL S. SHIRRARD
NUMBER
PE-2016040098
PROFESSIONAL ENGINEER
6/15/22

Construction and Facilities Management

VA U.S. Department of Veterans Affairs

Drawing Title
BLDG. 64 - SECURITY BASEMENT OVERALL PLAN

Approved: Project Director

Phase
100% CONSTRUCTION DOCUMENTS

FULLY SPRINKLERED

Project Title
CINCINNATI VAMC EHRM INFRASTRUCTURE UPGRADES

Location
3200 VINE ST. CINCINNATI, OH. 45220

Issue Date: 15-JUNE-2022
Scale: 3/32" = 1'-0"
Checked By: MS
Drawn By: TL

Project Number 539-21-701
Building Number F64
Drawing Number TS-250-F.64.B

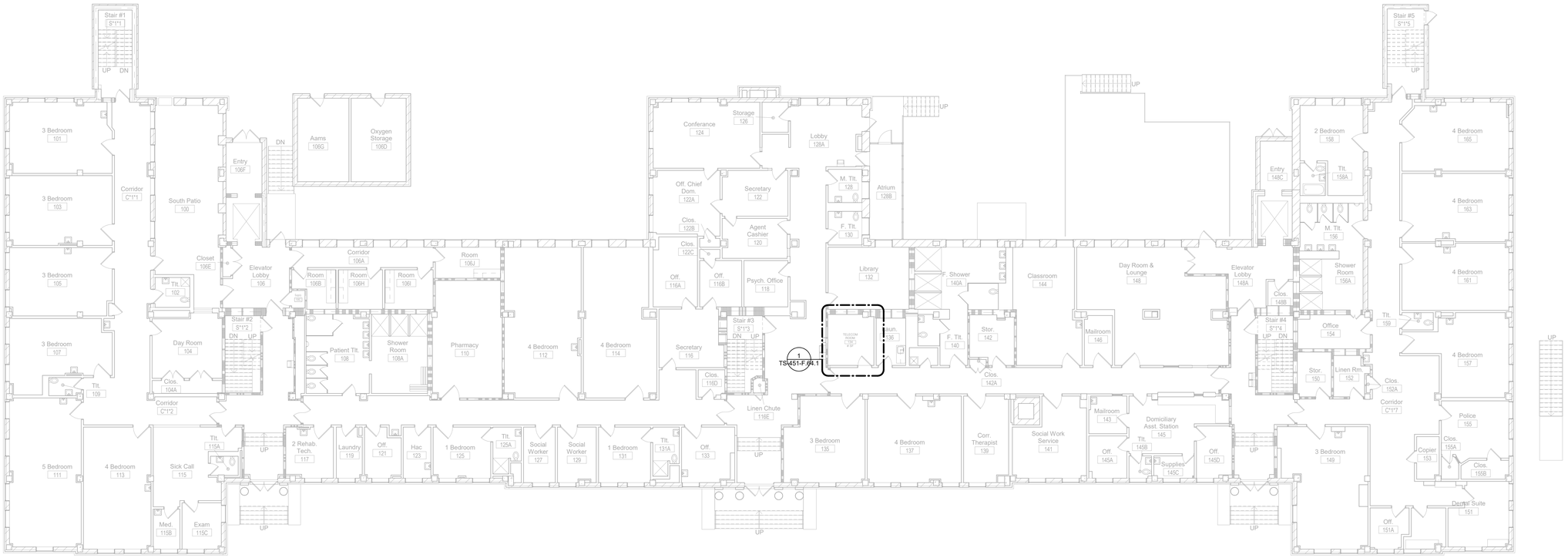

1 SECURITY BLDG 64 FIRST FLOOR OVERALL PLAN
3/32" = 1'-0"

TRUE NORTH PLAN NORTH

Description	Date

CONSULTANT

Ross&Baruzzini

LOW VOLTAGE/ IT
Ross & Baruzzini Inc.
1600 Riveredge Parkway NW
Suite 900
Atlanta, GA 30328

PROJECT MANAGEMENT

HFS COMPANY

8718 Botts Lane
San Antonio, Texas 78217
www.hfscompany.com
jbianco@hfscompany.com

Phone: (210) 816-4784
Fax: (210) 881-6808

MICHAEL S. STUHFORS PE-2016040095 5/4/22

Construction and Facilities Management

VA U.S. Department of Veterans Affairs

Drawing Title: BLDG. 64 - SECURITY FIRST FLOOR OVERALL PLAN	Phase: 100% CONSTRUCTION DOCUMENTS	Project Title: CINCINNATI VAMC EHRM INFRASTRUCTURE UPGRADES	Project Number: 539-21-701
Approved: Project Director	FULLY SPRINKLERED	Location: 3200 VINE ST. CINCINNATI, OH. 45220	Building Number: F64
		Issue Date: 04-MAY-2022 / Checked By: MS / Drawn By: TL	Drawing Number: TS-251-F.64.1
		Scale: 3/32" = 1'-0"	

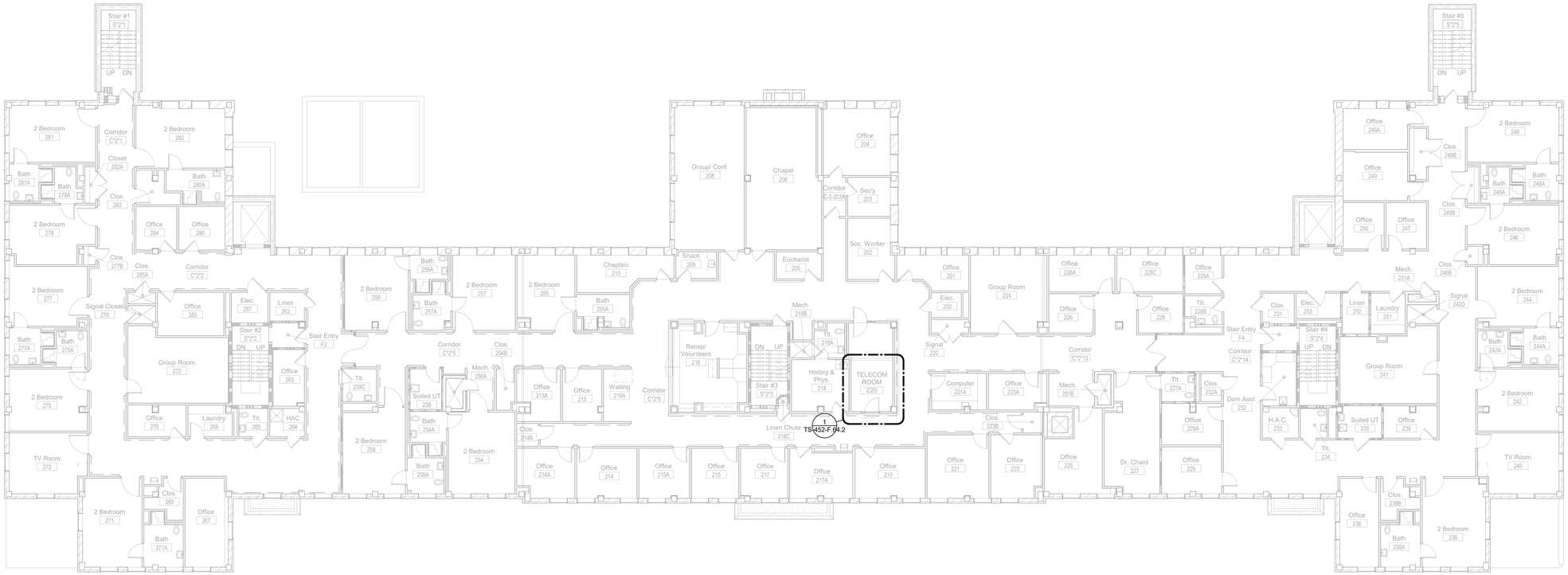

1 SECURITY BLDG 64 SECOND FLOOR OVERALL PLAN
3/32" = 1'-0"

TRUE NORTH PLAN NORTH

Description	Date

CONSULTANT

Ross&Baruzzini

LOW VOLTAGE/ IT
Ross & Baruzzini Inc.
1600 Riveredge Parkway NW
Suite 900
Atlanta, GA 30328

PROJECT MANAGEMENT

HFS COMPANY

8718 Botts Lane
San Antonio, Texas 78217
www.hfscompany.com
jbianco@hfscompany.com
Phone: (210) 816-4784
Fax: (210) 881-6808

MICHAEL S. SHUMPERT
PE-2016042095
5/4/22

Construction and Facilities Management

VA U.S. Department of Veterans Affairs

Drawing Title: BLDG. 64 - SECURITY SECOND FLOOR OVERALL PLAN	Phase: 100% CONSTRUCTION DOCUMENTS	Project Title: CINCINNATI VAMC EHRM INFRASTRUCTURE UPGRADES	Project Number: 539-21-701
Approved: Project Director	FULLY SPRINKLERED	Location: 3200 VINE ST. CINCINNATI, OH. 45220	Building Number: F64
		Issue Date: 04-MAY-2022 / Checked By: MS / Drawn By: TL	Drawing Number: TS-252-F.64.2
		Scale: 3/32" = 1'-0"	

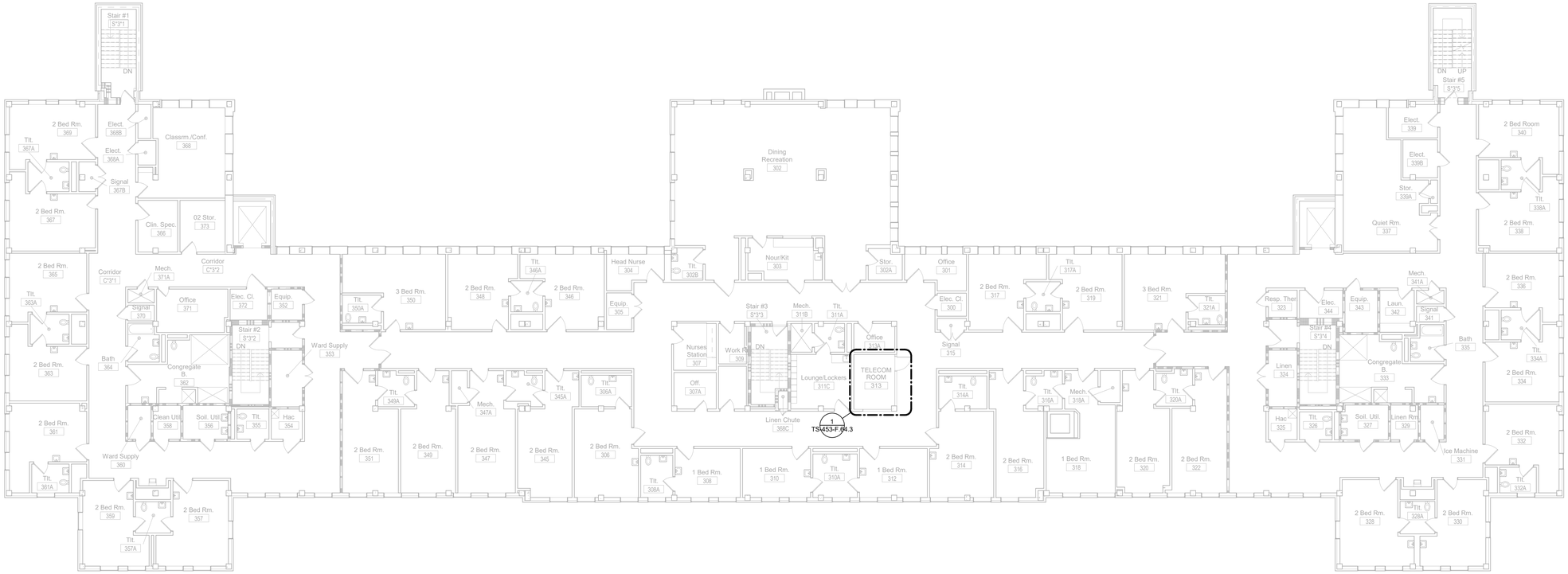

1 SECURITY BLDG 64 THIRD FLOOR OVERALL PLAN
3/32" = 1'-0"

TRUE NORTH PLAN NORTH

Description	Date

CONSULTANT

Ross&Baruzzini

LOW VOLTAGE/ IT
Ross & Baruzzini Inc.
1600 Riveredge Parkway NW
Suite 900
Atlanta, GA 30328

PROJECT MANAGEMENT

HFS COMPANY
8718 Botts Lane
San Antonio, Texas 78217
www.hfscompany.com
jbianco@hfscompany.com
Phone: (210) 816-4784
Fax: (210) 881-6808

MICHAEL S. MARTINEZ
STATE OF TEXAS
PE-20160402095
5/4/22

Construction and Facilities Management

VA U.S. Department of Veterans Affairs

Drawing Title: BLDG. 64 - SECURITY THIRD FLOOR OVERALL PLAN

Approved: Project Director

Phase: 100% CONSTRUCTION DOCUMENTS

FULLY SPRINKLERED

Project Title: CINCINNATI VAMC EHRM INFRASTRUCTURE UPGRADES

Location: 3200 VINE ST. CINCINNATI, OH. 45220

Issue Date: 04-MAY-2022

Scale: 3/32" = 1'-0"

Checked By: MS

Drawn By: TL

Project Number: 539-21-701

Building Number: F64

Drawing Number: TS-253-F.64.3

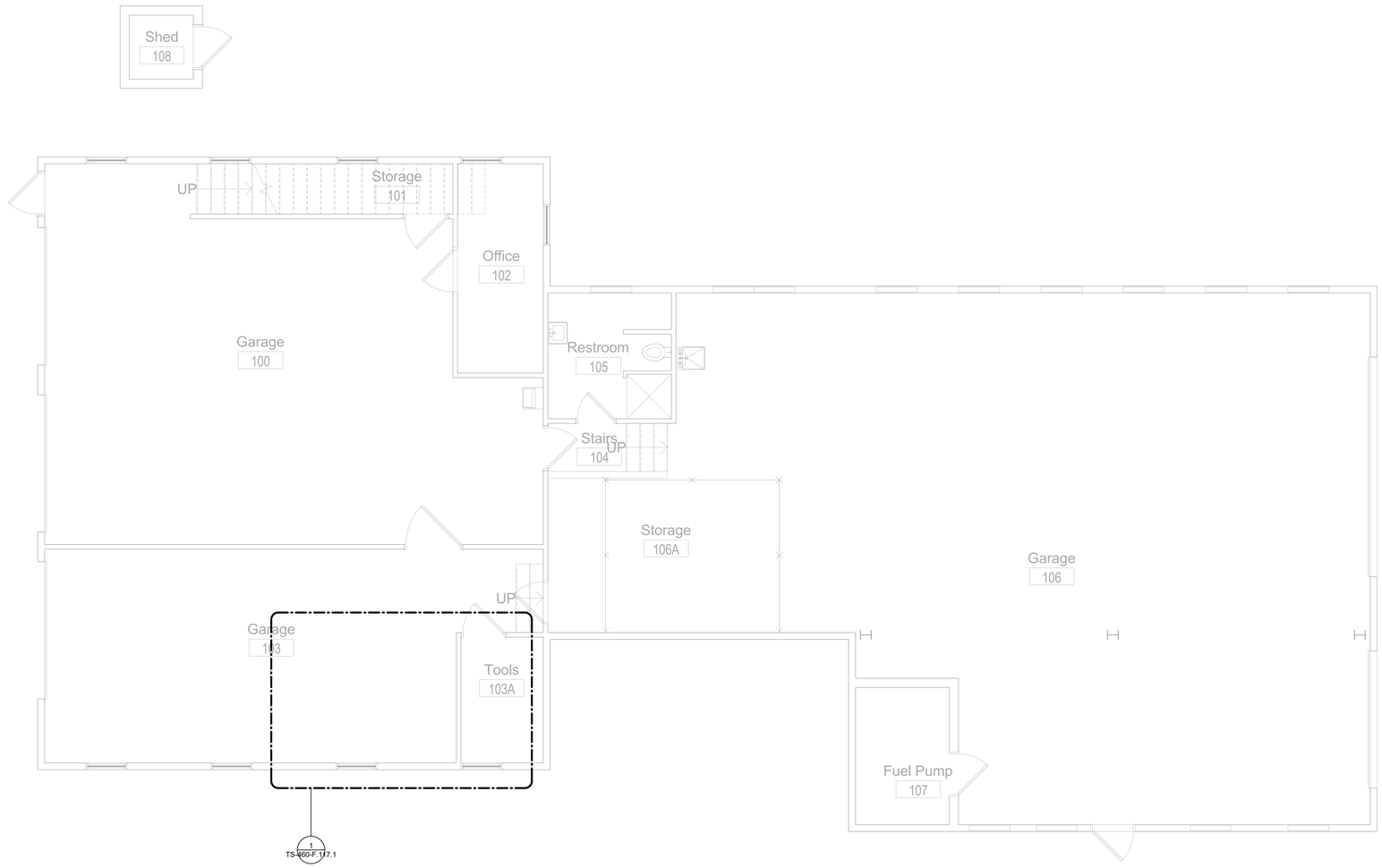

1 SECURITY BLDG 117 FIRST FLOOR OVERALL PLAN
1/4" = 1'-0"

TRUE NORTH PLAN NORTH

Description	Date

CONSULTANT

Ross&Baruzzini

LOW VOLTAGE/ IT
Ross & Baruzzini Inc.
1600 Riveredge Parkway NW
Suite 900
Atlanta, GA 30328

PROJECT MANAGEMENT

HFS COMPANY

8718 Botts Lane
San Antonio, Texas 78217
www.hfscompany.com
jbianco@hfscompany.com

Phone: (210) 816-4784
Fax: (210) 881-6808

MICHAEL A. SHEPARD REGISTERED PROFESSIONAL ENGINEER NUMBER PE-2016046206
5/4/22

Construction and Facilities Management

VA U.S. Department of Veterans Affairs

Drawing Title	Phase	Project Title	Project Number
BLDG. 117 - SECURITY FIRST FLOOR OVERALL PLAN	100% CONSTRUCTION DOCUMENTS	CINCINNATI VAMC EHRM INFRASTRUCTURE UPGRADES	539-21-701
Approved: Project Director	FULLY SPRINKLERED	Location: 3200 VINE ST. CINCINNATI, OH. 45220	Building Number: F117
		Issue Date: 04-MAY-2022 / Checked By: MS / Drawn By: TL	Drawing Number: TS-260-F.117.1
		Scale: 1/4" = 1'-0"	

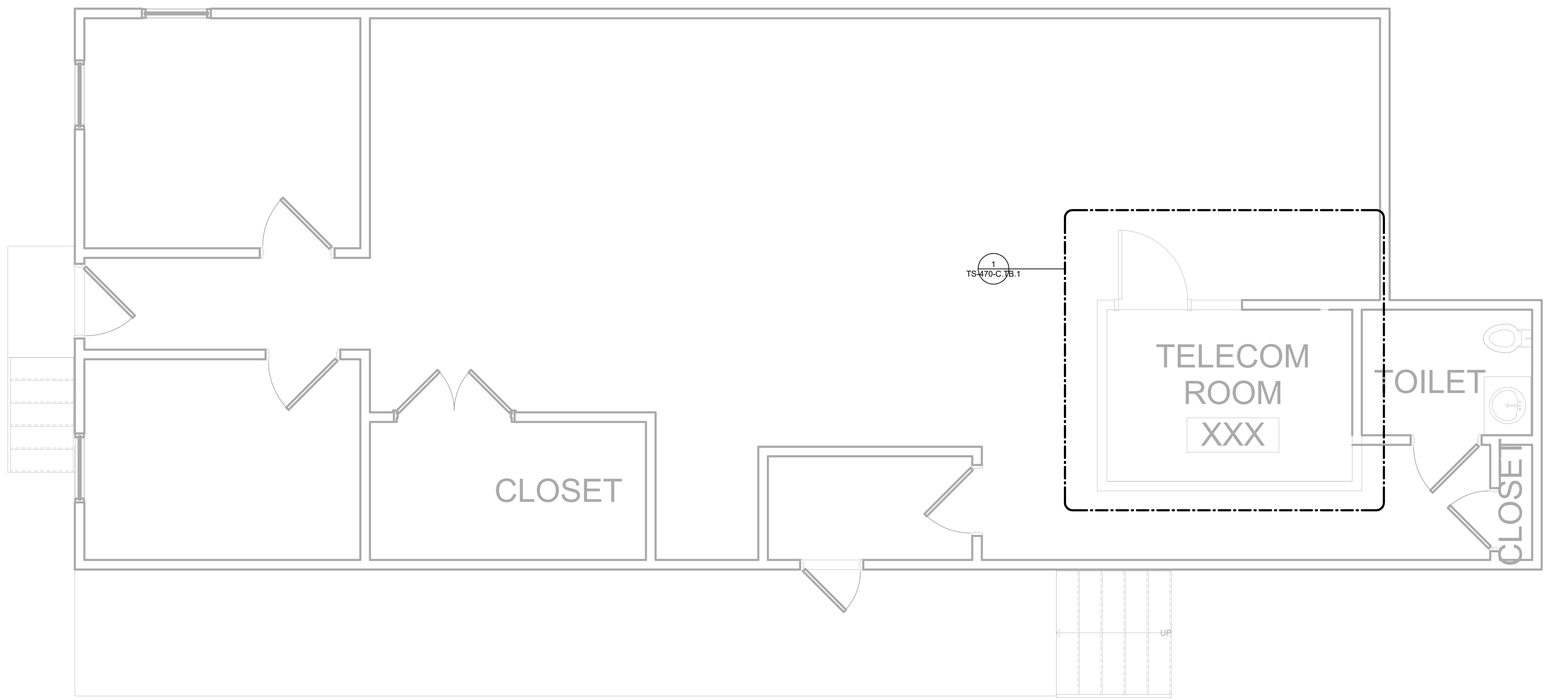

1 SECURITY BLDG TB FIRST FLOOR OVERALL PLAN
3/8" = 1'-0"

TRUE NORTH PLAN NORTH

Description	Date

CONSULTANT

Ross&Baruzzini

LOW VOLTAGE/ IT
Ross & Baruzzini Inc.
1600 Riveredge Parkway NW
Suite 900
Atlanta, GA 30328

PROJECT MANAGEMENT

HFS COMPANY
8718 Botts Lane
San Antonio, Texas 78217
www.hfscompany.com
jbianco@hfscompany.com
Phone: (210) 816-4784
Fax: (210) 881-6808

MICHAEL A. MIERZWA
NUMBER PE-2016042006
5/4/22

Construction and Facilities Management

VA U.S. Department of Veterans Affairs

Drawing Title: BLDG. TB - SECURITY FIRST FLOOR OVERALL PLAN

Approved: Project Director

Phase: 100% CONSTRUCTION DOCUMENTS

FULLY SPRINKLERED

Project Title: CINCINNATI VAMC EHRM INFRASTRUCTURE UPGRADES

Location: 3200 VINE ST. CINCINNATI, OH. 45220

Issue Date: 04-MAY-2022

Scale: 3/8" = 1'-0"

Checked By: MS

Drawn By: TL

Project Number: 539-21-701

Building Number: CTB

Drawing Number: TS-270-C.TB.1

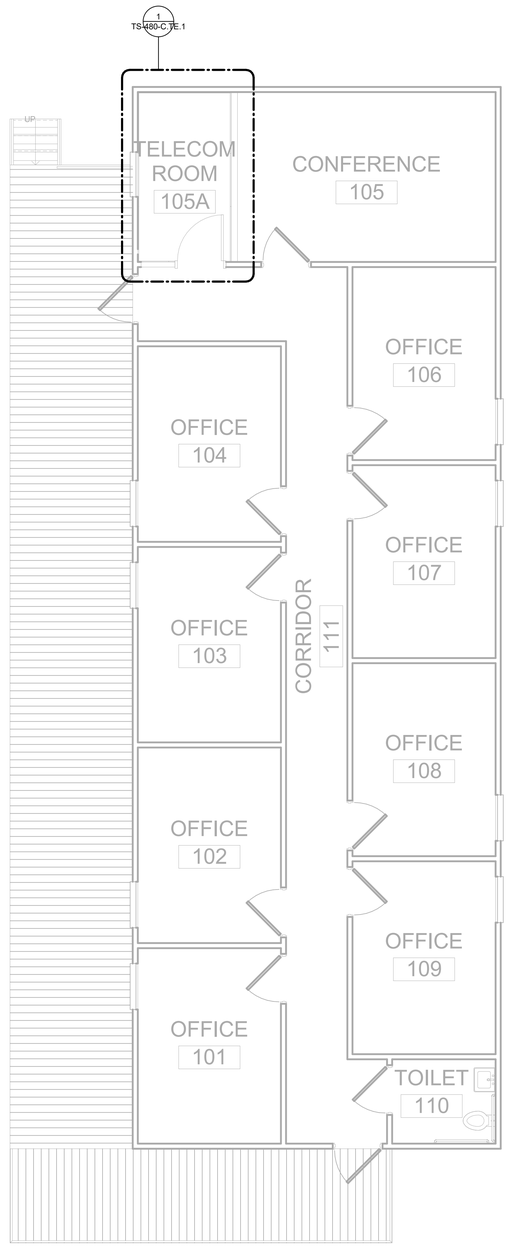

1 SECURITY BLDG TE FIRST FLOOR OVERALL PLAN
1/4" = 1'-0"

TRUE NORTH PLAN NORTH

Description	Date

CONSULTANT

Ross&Baruzzini

LOW VOLTAGE/ IT
Ross & Baruzzini Inc.
1600 Riveredge Parkway NW
Suite 900
Atlanta, GA 30328

PROJECT MANAGEMENT

HFS COMPANY

8718 Botts Lane
San Antonio, Texas 78217
www.hfscompany.com
jbianco@hfscompany.com
Phone: (210) 816-4784
Fax: (210) 881-6808

MICHAEL A. SHEPARD
NUMBER
PE-2016040006
5/4/22

Construction and Facilities Management

VA U.S. Department of Veterans Affairs

Drawing Title: BLDG. TE - SECURITY FIRST FLOOR OVERALL PLAN

Approved: Project Director

Phase: 100% CONSTRUCTION DOCUMENTS

FULLY SPRINKLERED

Project Title: CINCINNATI VAMC EHRM INFRASTRUCTURE UPGRADES

Location: 3200 VINE ST. CINCINNATI, OH. 45220

Issue Date: 04-MAY-2022

Scale: 1/4" = 1'-0"

Checked By: MS

Drawn By: TL

Project Number: 539-21-701

Building Number: CTE

Drawing Number: TS-280-C.TE.1

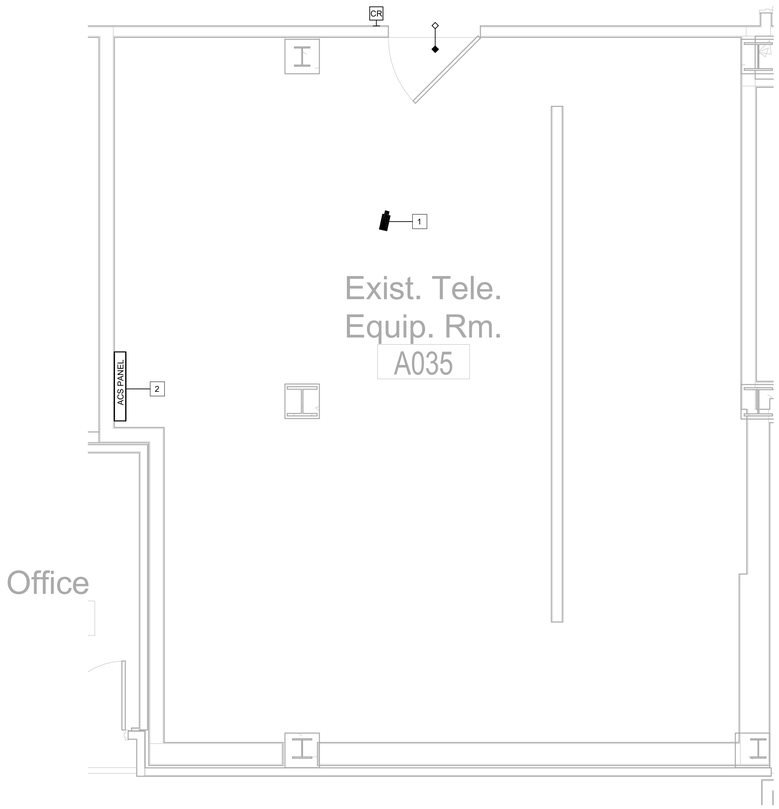

1 SECURITY BASEMENT ENLARGED TDR PLAN - EXIST. TELE. EQUIP. A035
3/8" = 1'-0"

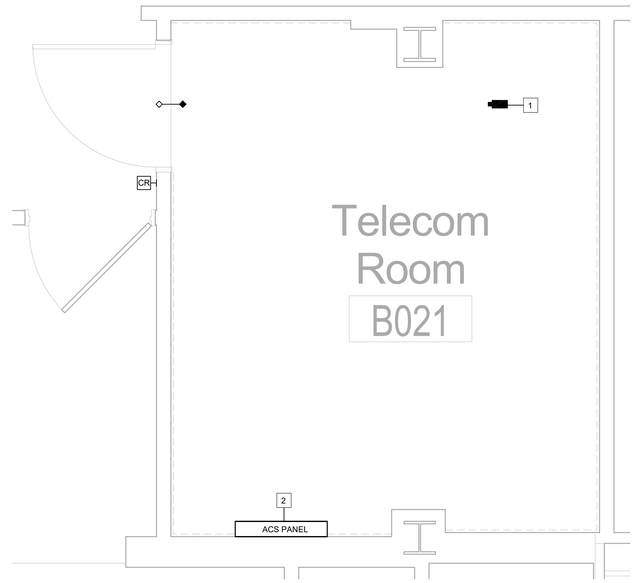

2 SECURITY BASEMENT ENLARGED TDR PLAN - TELECOM B021
1/2" = 1'-0"

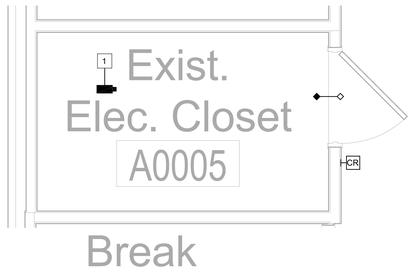

3 SECURITY BASEMENT ENLARGED SER PLAN - EXIST. ELEC. CLOSET A0005
1/2" = 1'-0"

GENERAL NOTES:

1. REFER TO SHEET TS-000 FOR GENERAL NOTES AND LEGENDS.
2. CONTRACTOR SHALL COORDINATE THE EQUIPMENT'S INSTALLATION AND FINAL LOCATION WITH THE ELECTRICAL AND MECHANICAL DIVISION. REFER TO ELECTRICAL, MECHANICAL AND PLUMBING DRAWINGS.

 # KEYED NOTES:

1. CAMERAS TO BE INSTALLED TO ACHEIVE AN UNOBSTRUCTED VIEW OF PERSONS ENTERING OR EXITING THE ROOM.
2. WALL MOUNTED ACCESS CONTROL PANEL MOUNTED AT 26 INCHES A.F.F.

TRUE NORTH PLAN NORTH

Description	Date

CONSULTANT

Ross&Baruzzini

LOW VOLTAGE/ IT
Ross & Baruzzini Inc.
1600 Riveredge Parkway NW
Suite 900
Atlanta, GA 30328

PROJECT MANAGEMENT

HFS COMPANY

8718 Botts Lane
San Antonio, Texas 78217
www.hfscompany.com
jbianco@hfscompany.com
Phone: (210) 816-4784
Fax: (210) 881-6808

MICHAEL S. STUMPER
PE-2016060295
5/4/22

Construction and Facilities Management

VA U.S. Department of Veterans Affairs

Drawing Title: SECURITY ENLARGED TDR PLANS

Approved: Project Director

Phase: 100% CONSTRUCTION DOCUMENTS

FULLY SPRINKLERED

Project Title: CINCINNATI VAMC EHRM INFRASTRUCTURE UPGRADES

Location: 3200 VINE ST. CINCINNATI, OH. 45220

Issue Date: 04-MAY-2022

Scale: As indicated

Checked By: MS

Drawn By: TL

Project Number: 539-21-701

Building Number: C1

Drawing Number: TS-400-C.1.B

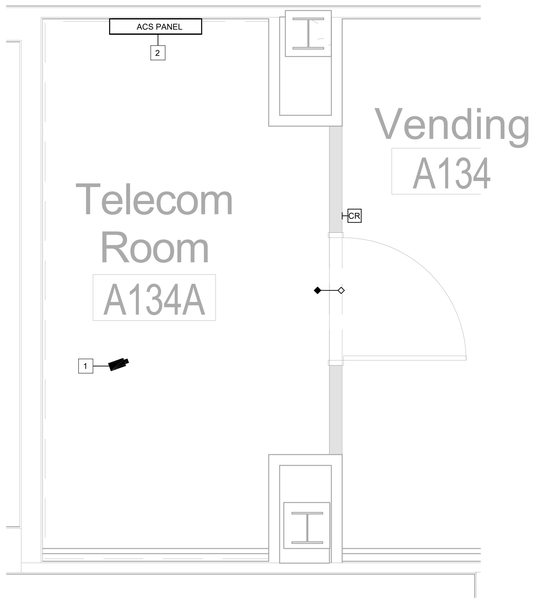

1 SECURITY FIRST FLOOR ENLARGED TDR PLAN - TELECOM A134A
1/2" = 1'-0"

2 SECURITY FIRST FLOOR ENLARGED TDR PLAN - TELECOM A144A
1/2" = 1'-0"

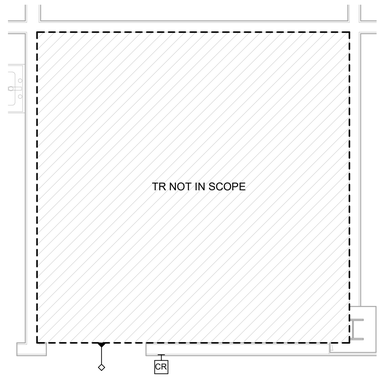

3 SECURITY FIRST FLOOR ENLARGED TDR PLAN - TELECOM C179
1/2" = 1'-0"

GENERAL NOTES:

1. REFER TO SHEET TS-000 FOR GENERAL NOTES AND LEGENDS.
2. CONTRACTOR SHALL COORDINATE THE EQUIPMENT'S INSTALLATION AND FINAL LOCATION WITH THE ELECTRICAL AND MECHANICAL DIVISION. REFER TO ELECTRICAL, MECHANICAL AND PLUMBING DRAWINGS.

 # KEYED NOTES:

1. CAMERAS TO BE INSTALLED TO ACHEIVE AN UNOBSTRUCTED VIEW OF PERSONS ENTERING OR EXITING THE ROOM.
2. WALL MOUNTED ACCESS CONTROL PANEL MOUNTED AT 26 INCHES A.F.F.

TRUE NORTH PLAN NORTH

Description	Date

CONSULTANT

Ross&Baruzzini

LOW VOLTAGE/ IT
Ross & Baruzzini Inc.
1600 Riveredge Parkway NW
Suite 900
Atlanta, GA 30328

PROJECT MANAGEMENT

HFS COMPANY
8718 Botts Lane
San Antonio, Texas 78217
www.hfscompany.com
jbianco@hfscompany.com
Phone: (210) 816-4784
Fax: (210) 881-6808

MICHAEL A. SHEPARD
NUMBER PE-2016040206
5/4/22

Construction and Facilities Management

VA U.S. Department of Veterans Affairs

Drawing Title: SECURITY ENLARGED TDR PLANS	Phase: 100% CONSTRUCTION DOCUMENTS	Project Title: CINCINNATI VAMC EHRM INFRASTRUCTURE UPGRADES	Project Number: 539-21-701
			Building Number: C1
Approved: Project Director	FULLY SPRINKLERED	Location: 3200 VINE ST. CINCINNATI, OH. 45220	Drawing Number: TS-401-C.1.1
		Issue Date: 04-MAY-2022 / Checked By: MS / Drawn By: TL	
		Scale: 1/2" = 1'-0"	

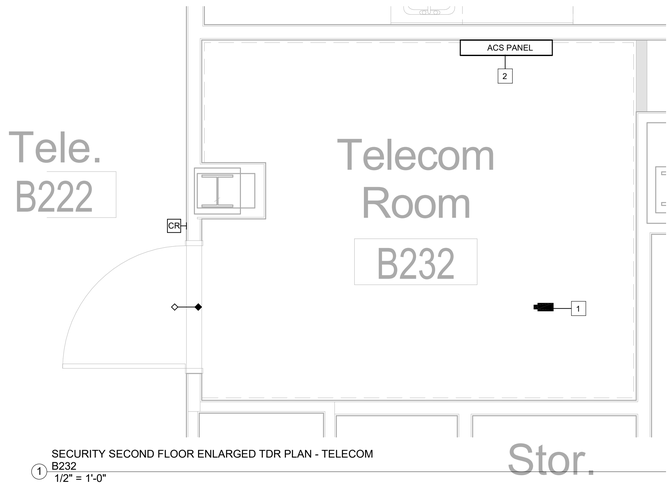

1 SECURITY SECOND FLOOR ENLARGED TDR PLAN - TELECOM B232
1/2" = 1'-0"

2 SECURITY SECOND FLOOR ENLARGED TDR PLAN - TELECOM A2006A
1/2" = 1'-0"

3 SECURITY SECOND FLOOR ENLARGED TDR PLAN - TELECOM C236A
1/2" = 1'-0"

GENERAL NOTES:

1. REFER TO SHEET TS-000 FOR GENERAL NOTES AND LEGENDS.
2. CONTRACTOR SHALL COORDINATE THE EQUIPMENT'S INSTALLATION AND FINAL LOCATION WITH THE ELECTRICAL AND MECHANICAL DIVISION. REFER TO ELECTRICAL, MECHANICAL AND PLUMBING DRAWINGS.

 # KEYED NOTES:

1. CAMERAS TO BE INSTALLED TO ACHEIVE AN UNOBSTRUCTED VIEW OF PERSONS ENTERING OR EXITING THE ROOM.
2. WALL MOUNTED ACCESS CONTROL PANEL MOUNTED AT 26 INCHES A.F.F.

TRUE NORTH PLAN NORTH

Description	Date

CONSULTANT

Ross&Baruzzini

LOW VOLTAGE/ IT
Ross & Baruzzini Inc.
1600 Riveredge Parkway NW
Suite 900
Atlanta, GA 30328

PROJECT MANAGEMENT

HFS COMPANY

8718 Botts Lane
San Antonio, Texas 78217
www.hfscompany.com
jbianco@hfscompany.com
Phone: (210) 816-4784
Fax: (210) 881-6808

MICHAEL A. SHEPARD NUMBER PE-2016016006 5/4/22

Construction and Facilities Management

VA U.S. Department of Veterans Affairs

Drawing Title SECURITY ENLARGED TDR PLANS	**Phase** 100% CONSTRUCTION DOCUMENTS	**Project Title** CINCINNATI VAMC EHRM INFRASTRUCTURE UPGRADES	**Project Number** 539-21-701
			Building Number C1
Approved: Project Director	FULLY SPRINKLERED	**Location** 3200 VINE ST. CINCINNATI, OH. 45220	**Drawing Number** TS-402-C.1.2
		Issue Date: 04-MAY-2022 / **Scale:** 1/2" = 1'-0"	**Checked By:** MS / **Drawn By:** TL

1 SECURITY THIRD FLOOR ENLARGED TDR PLAN - TELECOM B312D
1/2" = 1'-0"

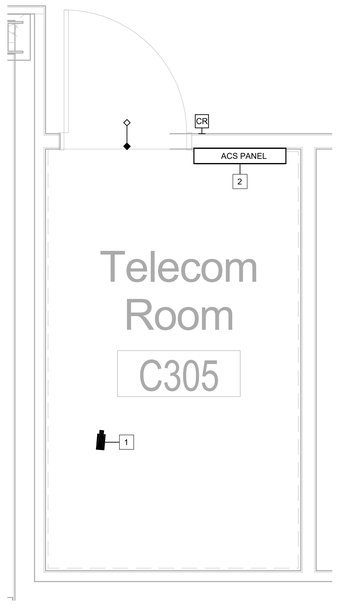

2 SECURITY THIRD FLOOR ENLARGED TDR PLAN - TELECOM C305
1/2" = 1'-0"

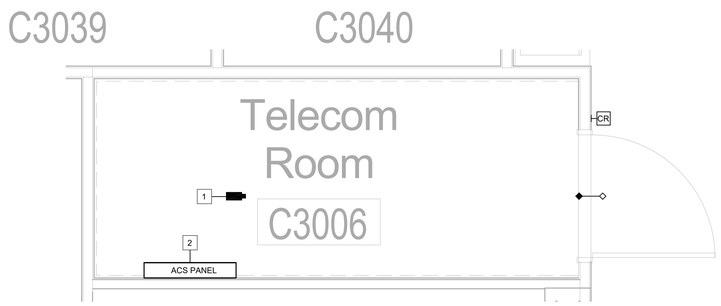

3 SECURITY THIRD FLOOR ENLARGED TDR PLAN - TELECOM C3006
1/2" = 1'-0"

GENERAL NOTES:

1. REFER TO SHEET TS-000 FOR GENERAL NOTES AND LEGENDS.
2. CONTRACTOR SHALL COORDINATE THE EQUIPMENT'S INSTALLATION AND FINAL LOCATION WITH THE ELECTRICAL AND MECHANICAL DIVISION. REFER TO ELECTRICAL, MECHANICAL AND PLUMBING DRAWINGS.

 # KEYED NOTES:

1. CAMERAS TO BE INSTALLED TO ACHEIVE AN UNOBSTRUCTED VIEW OF PERSONS ENTERING OR EXITING THE ROOM.
2. WALL MOUNTED ACCESS CONTROL PANEL MOUNTED AT 26 INCHES A.F.F.

TRUE NORTH PLAN NORTH

Description	Date

CONSULTANT

Ross&Baruzzini

LOW VOLTAGE/ IT
Ross & Baruzzini Inc.
1600 Riveredge Parkway NW
Suite 900
Atlanta, GA 30328

PROJECT MANAGEMENT

HFS COMPANY

8718 Botts Lane
San Antonio, Texas 78217
www.hfscompany.com
jbianco@hfscompany.com
Phone: (210) 816-4784
Fax: (210) 881-6808

MICHAEL A. SHEPARD
NUMBER PE-2016026206
5/4/22

Construction and Facilities Management

VA U.S. Department of Veterans Affairs

Drawing Title: SECURITY ENLARGED TDR PLANS	Phase: 100% CONSTRUCTION DOCUMENTS	Project Title: CINCINNATI VAMC EHRM INFRASTRUCTURE UPGRADES	Project Number: 539-21-701
			Building Number: C1
Approved: Project Director	FULLY SPRINKLERED	Location: 3200 VINE ST. CINCINNATI, OH. 45220	Drawing Number: TS-403-C.1.3
		Issue Date: 04-MAY-2022 / Checked By: MS / Drawn By: TL	
		Scale: 1/2" = 1'-0"	

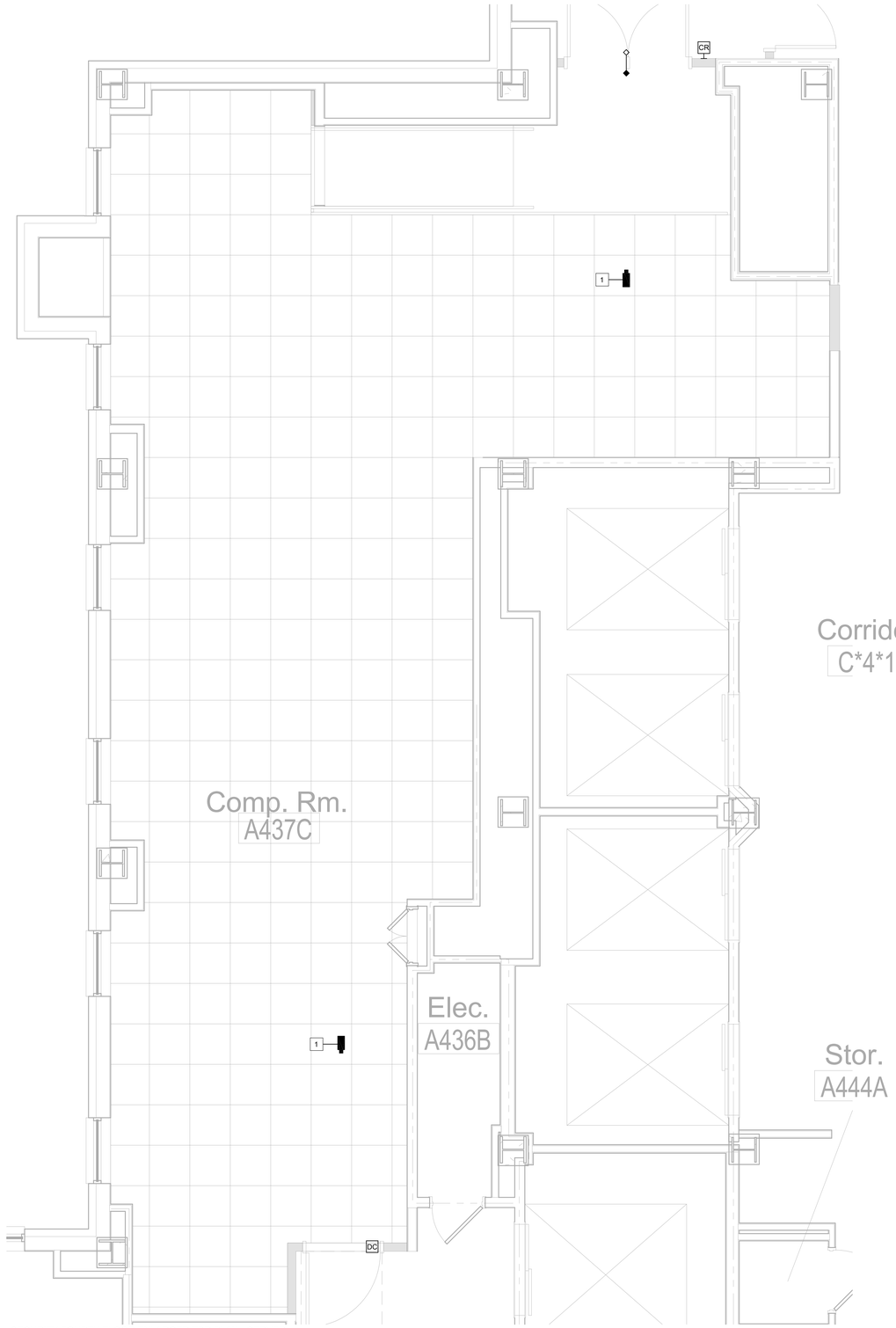

SECURITY FOURTH FLOOR ENLARGED TDR PLAN - SERVER
1 A437C
3/8" = 1'-0"

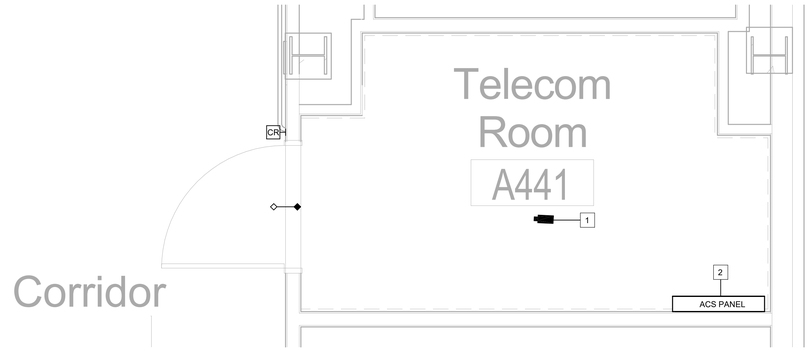

SECURITY FOURTH FLOOR ENLARGED TDR PLAN - TELECOM
2 A441
1/2" = 1'-0"

GENERAL NOTES:

1. REFER TO SHEET TS-000 FOR GENERAL NOTES AND LEGENDS.
2. CONTRACTOR SHALL COORDINATE THE EQUIPMENT'S INSTALLATION AND FINAL LOCATION WITH THE ELECTRICAL AND MECHANICAL DIVISION. REFER TO ELECTRICAL, MECHANICAL AND PLUMBING DRAWINGS.

 # KEYED NOTES:

1. CAMERAS TO BE INSTALLED TO ACHEIVE AN UNOBSTRUCTED VIEW OF PERSONS ENTERING OR EXITING THE ROOM.
2. WALL MOUNTED ACCESS CONTROL PANEL MOUNTED AT 26 INCHES A.F.F.

TRUE NORTH PLAN NORTH

Description	Date

CONSULTANT

Ross&Baruzzini

LOW VOLTAGE/ IT
Ross & Baruzzini Inc.
1600 Riveredge Parkway NW
Suite 900
Atlanta, GA 30328

PROJECT MANAGEMENT

HFS COMPANY

8718 Botts Lane
San Antonio, Texas 78217
www.hfscompany.com
jbianco@hfscompany.com

Phone: (210) 816-4784
Fax: (210) 881-6808

MICHAEL A. SUBIRIA LICENSED PROFESSIONAL ENGINEER NUMBER PE-2016042006 STATE OF OHIO
5/4/22

Construction and Facilities Management

VA U.S. Department of Veterans Affairs

Drawing Title: SECURITY ENLARGED TDR PLANS	Phase: 100% CONSTRUCTION DOCUMENTS	Project Title: CINCINNATI VAMC EHRM INFRASTRUCTURE UPGRADES	Project Number: 539-21-701
			Building Number: C1
Approved: Project Director	FULLY SPRINKLERED	Location: 3200 VINE ST. CINCINNATI, OH. 45220	Drawing Number: TS-404-C.1.4
		Issue Date: 04-MAY-2022 / Scale: As indicated / Checked By: MS / Drawn By: TL	

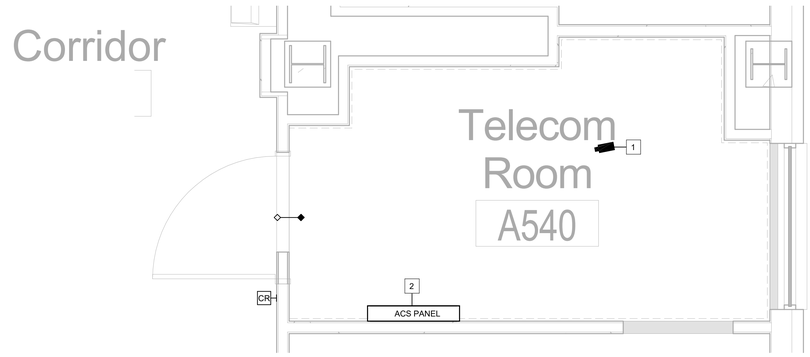

1 SECURITY FIFTH FLOOR ENLARGED TDR PLAN - TELECOM A540
1/2" = 1'-0"

GENERAL NOTES:

1. REFER TO SHEET TS-000 FOR GENERAL NOTES AND LEGENDS.
2. CONTRACTOR SHALL COORDINATE THE EQUIPMENT'S INSTALLATION AND FINAL LOCATION WITH THE ELECTRICAL AND MECHANICAL DIVISION. REFER TO ELECTRICAL, MECHANICAL AND PLUMBING DRAWINGS.

 # KEYED NOTES:

1. CAMERAS TO BE INSTALLED TO ACHEIVE AN UNOBSTRUCTED VIEW OF PERSONS ENTERING OR EXITING THE ROOM.
2. WALL MOUNTED ACCESS CONTROL PANEL MOUNTED AT 26 INCHES A.F.F.

TRUE NORTH PLAN NORTH

Description	Date

CONSULTANT

Ross&Baruzzini

LOW VOLTAGE/ IT
Ross & Baruzzini Inc.
1600 Riveredge Parkway NW
Suite 900
Atlanta, GA 30328

PROJECT MANAGEMENT

HFS COMPANY
8718 Botts Lane
San Antonio, Texas 78217
www.hfscompany.com
jbianco@hfscompany.com
Phone: (210) 816-4784
Fax: (210) 881-6808

MICHAEL A. SHEPARD
NUMBER PE-2016040006
5/4/22

Construction and Facilities Management

VA U.S. Department of Veterans Affairs

Drawing Title: SECURITY ENLARGED TDR PLANS	Phase: 100% CONSTRUCTION DOCUMENTS	Project Title: CINCINNATI VAMC EHRM INFRASTRUCTURE UPGRADES	Project Number: 539-21-701
			Building Number: C1
Approved: Project Director	FULLY SPRINKLERED	Location: 3200 VINE ST. CINCINNATI, OH. 45220	Drawing Number: TS-405-C.1.5
		Issue Date: 04-MAY-2022 / Checked By: MS / Drawn By: TL	
		Scale: 1/2" = 1'-0"	

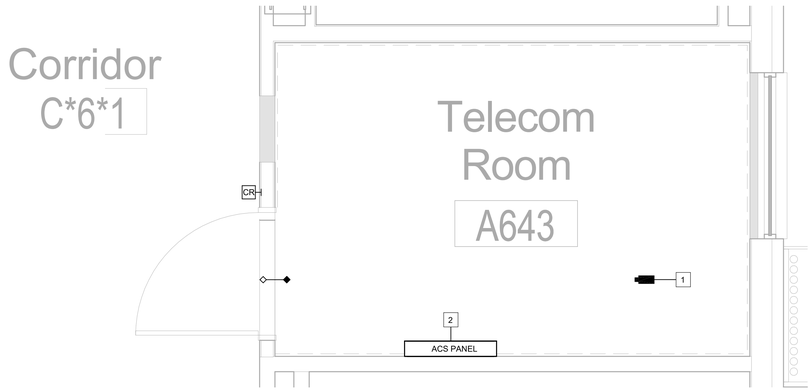

1 SECURITY SIXTH FLOOR ENLARGED TDR PLAN - TELECOM A643
1/2" = 1'-0"

GENERAL NOTES:

1. REFER TO SHEET TS-000 FOR GENERAL NOTES AND LEGENDS.
2. CONTRACTOR SHALL COORDINATE THE EQUIPMENT'S INSTALLATION AND FINAL LOCATION WITH THE ELECTRICAL AND MECHANICAL DIVISION. REFER TO ELECTRICAL, MECHANICAL AND PLUMBING DRAWINGS.

 # KEYED NOTES:

1. CAMERAS TO BE INSTALLED TO ACHEIVE AN UNOBSTRUCTED VIEW OF PERSONS ENTERING OR EXITING THE ROOM.
2. WALL MOUNTED ACCESS CONTROL PANEL MOUNTED AT 26 INCHES A.F.F.

TRUE NORTH PLAN NORTH

Description	Date

CONSULTANT

Ross&Baruzzini

LOW VOLTAGE/ IT
Ross & Baruzzini Inc.
1600 Riveredge Parkway NW
Suite 900
Atlanta, GA 30328

PROJECT MANAGEMENT

HFS COMPANY
8718 Botts Lane
San Antonio, Texas 78217
www.hfscompany.com
jbianco@hfscompany.com
Phone: (210) 816-4784
Fax: (210) 881-6808

MICHAEL A. SHEPARD
NUMBER PE-2016046006
5/4/22

Construction and Facilities Management

VA U.S. Department of Veterans Affairs

Drawing Title: SECURITY ENLARGED TDR PLANS	Phase: 100% CONSTRUCTION DOCUMENTS	Project Title: CINCINNATI VAMC EHRM INFRASTRUCTURE UPGRADES	Project Number: 539-21-701
			Building Number: C1
Approved: Project Director	FULLY SPRINKLERED	Location: 3200 VINE ST. CINCINNATI, OH. 45220	Drawing Number: TS-406-C.1.6
		Issue Date: 04-MAY-2022 / Checked By: MS / Drawn By: TL	
		Scale: 1/2" = 1'-0"	

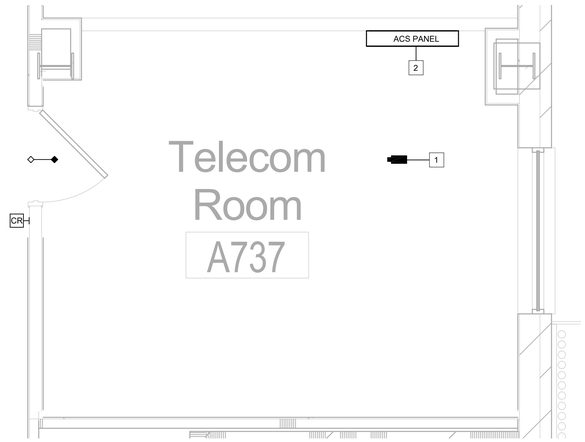

SECURITY SEVENTH FLOOR ENLARGED TDR PLAN - TELECOM
1 A737
1/2" = 1'-0"

GENERAL NOTES:

1. REFER TO SHEET TS-000 FOR GENERAL NOTES AND LEGENDS.
2. CONTRACTOR SHALL COORDINATE THE EQUIPMENT'S INSTALLATION AND FINAL LOCATION WITH THE ELECTRICAL AND MECHANICAL DIVISION. REFER TO ELECTRICAL, MECHANICAL AND PLUMBING DRAWINGS.

KEYED NOTES:

1. CAMERAS TO BE INSTALLED TO ACHEIVE AN UNOBSTRUCTED VIEW OF PERSONS ENTERING OR EXITING THE ROOM.
2. WALL MOUNTED ACCESS CONTROL PANEL MOUNTED AT 26 INCHES A.F.F.

TRUE NORTH PLAN NORTH

Description	Date

CONSULTANT

Ross&Baruzzini

LOW VOLTAGE/ IT
Ross & Baruzzini Inc.
1600 Riveredge Parkway NW
Suite 900
Atlanta, GA 30328

PROJECT MANAGEMENT

HFS COMPANY
8718 Botts Lane
San Antonio, Texas 78217
www.hfscompany.com
jbianco@hfscompany.com
Phone: (210) 816-4784
Fax: (210) 881-6808

MICHAEL A. SHEPARD
NUMBER PE-2016040006
5/4/22

Construction and Facilities Management

VA U.S. Department of Veterans Affairs

Drawing Title: SECURITY ENLARGED TDR PLANS	Phase: 100% CONSTRUCTION DOCUMENTS	Project Title: CINCINNATI VAMC EHRM INFRASTRUCTURE UPGRADES	Project Number: 539-21-701
			Building Number: C1
Approved: Project Director	FULLY SPRINKLERED	Location: 3200 VINE ST. CINCINNATI, OH. 45220	Drawing Number: TS-407-C.1.7
		Issue Date: 04-MAY-2022 / Checked By: MS / Drawn By: TL	
		Scale: 1/2" = 1'-0"	

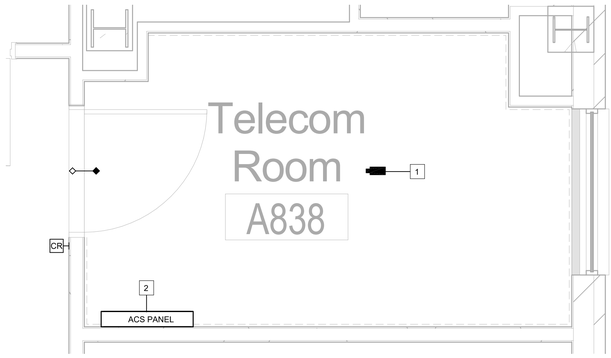

SECURITY EIGHTH FLOOR ENLARGED TDR PLAN - TELECOM
1 A838
1/2" = 1'-0"

GENERAL NOTES:

1. REFER TO SHEET TS-000 FOR GENERAL NOTES AND LEGENDS.
2. CONTRACTOR SHALL COORDINATE THE EQUIPMENT'S INSTALLATION AND FINAL LOCATION WITH THE ELECTRICAL AND MECHANICAL DIVISION. REFER TO ELECTRICAL, MECHANICAL AND PLUMBING DRAWINGS.

 # KEYED NOTES:

1. CAMERAS TO BE INSTALLED TO ACHEIVE AN UNOBSTRUCTED VIEW OF PERSONS ENTERING OR EXITING THE ROOM.
2. WALL MOUNTED ACCESS CONTROL PANEL MOUNTED AT 26 INCHES A.F.F.

TRUE NORTH PLAN NORTH

Description	Date

CONSULTANT

Ross&Baruzzini

LOW VOLTAGE/ IT
Ross & Baruzzini Inc.
1600 Riveredge Parkway NW
Suite 900
Atlanta, GA 30328

PROJECT MANAGEMENT

HFS COMPANY
8718 Botts Lane
San Antonio, Texas 78217
www.hfscompany.com
jbianco@hfscompany.com
Phone: (210) 816-4784
Fax: (210) 881-6808

MICHAEL A. SHEPARD
NUMBER PE-2016046006
5/4/22

Construction and Facilities Management

VA U.S. Department of Veterans Affairs

Drawing Title: SECURITY ENLARGED TDR PLANS	Phase: 100% CONSTRUCTION DOCUMENTS	Project Title: CINCINNATI VAMC EHRM INFRASTRUCTURE UPGRADES	Project Number: 539-21-701
			Building Number: C1
Approved: Project Director	FULLY SPRINKLERED	Location: 3200 VINE ST. CINCINNATI, OH. 45220	Drawing Number: TS-408-C.1.8
		Issue Date: 04-MAY-2022 / Checked By: MS / Drawn By: TL	
		Scale: 1/2" = 1'-0"	

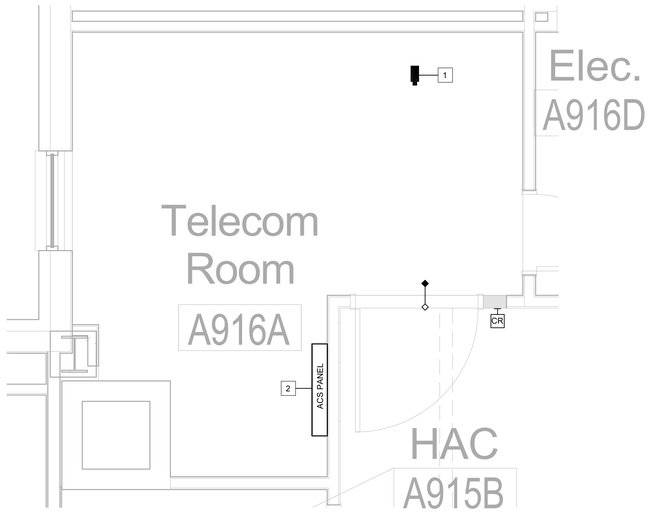

1 SECURITY NINTH FLOOR ENLARGED TDR PLAN - TELECOM A916A
1/2" = 1'-0"

GENERAL NOTES:

1. REFER TO SHEET TS-000 FOR GENERAL NOTES AND LEGENDS.
2. CONTRACTOR SHALL COORDINATE THE EQUIPMENT'S INSTALLATION AND FINAL LOCATION WITH THE ELECTRICAL AND MECHANICAL DIVISION. REFER TO ELECTRICAL, MECHANICAL AND PLUMBING DRAWINGS.

 # KEYED NOTES:

1. CAMERAS TO BE INSTALLED TO ACHEIVE AN UNOBSTRUCTED VIEW OF PERSONS ENTERING OR EXITING THE ROOM.
2. WALL MOUNTED ACCESS CONTROL PANEL MOUNTED AT 26 INCHES A.F.F.

TRUE NORTH PLAN NORTH

Description	Date

CONSULTANT

Ross&Baruzzini

LOW VOLTAGE/ IT
Ross & Baruzzini Inc.
1600 Riveredge Parkway NW
Suite 900
Atlanta, GA 30328

PROJECT MANAGEMENT

HFS COMPANY
8718 Botts Lane
San Antonio, Texas 78217
www.hfscompany.com
jbianco@hfscompany.com
Phone: (210) 816-4784
Fax: (210) 881-6808

MICHAEL A. SHEPARD
NUMBER PE-2016046006
5/4/22

Construction and Facilities Management

VA U.S. Department of Veterans Affairs

Drawing Title: SECURITY ENLARGED TDR PLANS	Phase: 100% CONSTRUCTION DOCUMENTS	Project Title: CINCINNATI VAMC EHRM INFRASTRUCTURE UPGRADES	Project Number: 539-21-701
			Building Number: C1
Approved: Project Director	FULLY SPRINKLERED	Location: 3200 VINE ST. CINCINNATI, OH. 45220	Drawing Number: TS-409-C.1.9
		Issue Date: 04-MAY-2022 / Checked By: MS / Drawn By: TL	
		Scale: 1/2" = 1'-0"	

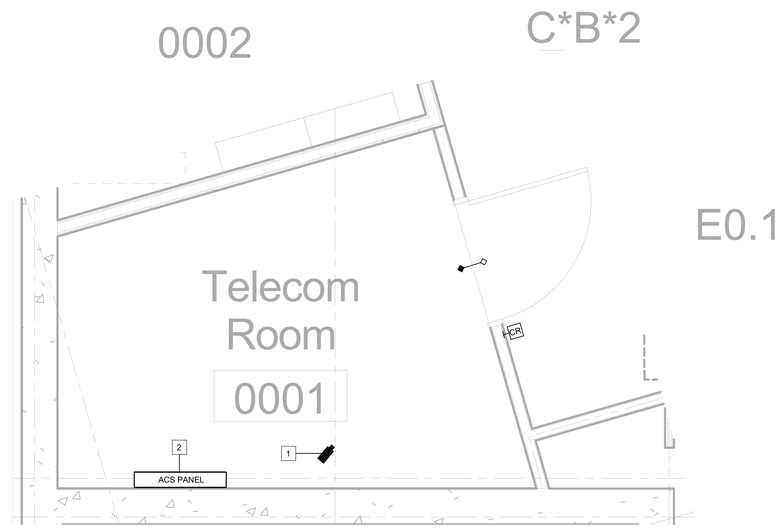

1 SECURITY BLDG 2 BASEMENT TDR PLAN - TELECOM 0001
1/2" = 1'-0"

GENERAL NOTES:

1. REFER TO SHEET TS-000 FOR GENERAL NOTES AND LEGENDS.
2. CONTRACTOR SHALL COORDINATE THE EQUIPMENT'S INSTALLATION AND FINAL LOCATION WITH THE ELECTRICAL AND MECHANICAL DIVISION. REFER TO ELECTRICAL, MECHANICAL AND PLUMBING DRAWINGS.

 # KEYED NOTES:

1. CAMERAS TO BE INSTALLED TO ACHEIVE AN UNOBSTRUCTED VIEW OF PERSONS ENTERING OR EXITING THE ROOM.
2. WALL MOUNTED ACCESS CONTROL PANEL MOUNTED AT 26 INCHES A.F.F.

TRUE NORTH PLAN NORTH

Description	Date

CONSULTANT

Ross&Baruzzini

LOW VOLTAGE/ IT
Ross & Baruzzini Inc.
1600 Riveredge Parkway NW
Suite 900
Atlanta, GA 30328

PROJECT MANAGEMENT

HFS COMPANY
8718 Botts Lane
San Antonio, Texas 78217
www.hfscompany.com
jbianco@hfscompany.com
Phone: (210) 816-4784
Fax: (210) 881-6808

MICHAEL A. SHEPARD
NUMBER PE-2016046006
5/4/22

Construction and Facilities Management

VA U.S. Department of Veterans Affairs

Drawing Title: BLDG. 2 - SECURITY ENLARGED TDR PLANS	Phase: 100% CONSTRUCTION DOCUMENTS	Project Title: CINCINNATI VAMC EHRM INFRASTRUCTURE UPGRADES	Project Number: 539-21-701
Approved: Project Director	FULLY SPRINKLERED	Location: 3200 VINE ST. CINCINNATI, OH. 45220	Building Number: C2
		Issue Date: 04-MAY-2022 / Checked By: MS / Drawn By: TL	Drawing Number: TS-410-C.2.B
		Scale: 1/2" = 1'-0"	

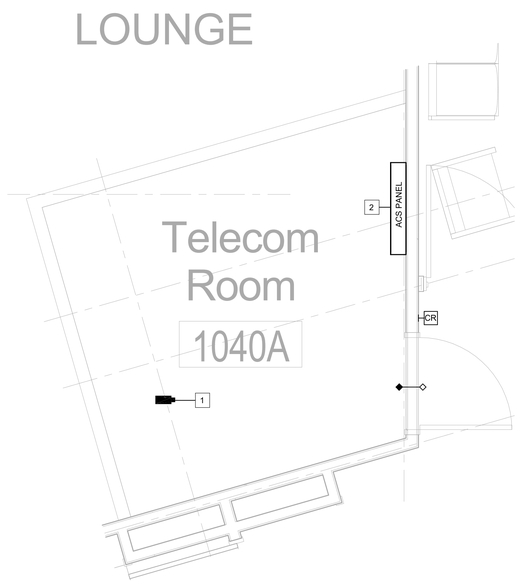

1 SECURITY BLDG 2 FIRST FLOOR TDR PLAN - TELECOM 1040A
1/2" = 1'-0"

GENERAL NOTES:

1. REFER TO SHEET TS-000 FOR GENERAL NOTES AND LEGENDS.
2. CONTRACTOR SHALL COORDINATE THE EQUIPMENT'S INSTALLATION AND FINAL LOCATION WITH THE ELECTRICAL AND MECHANICAL DIVISION. REFER TO ELECTRICAL, MECHANICAL AND PLUMBING DRAWINGS.

 # KEYED NOTES:

1. CAMERAS TO BE INSTALLED TO ACHEIVE AN UNOBSTRUCTED VIEW OF PERSONS ENTERING OR EXITING THE ROOM.
2. WALL MOUNTED ACCESS CONTROL PANEL MOUNTED AT 26 INCHES A.F.F.

TRUE NORTH PLAN NORTH

Description	Date

CONSULTANT

Ross&Baruzzini

LOW VOLTAGE/ IT
Ross & Baruzzini Inc.
1600 Riveredge Parkway NW
Suite 900
Atlanta, GA 30328

PROJECT MANAGEMENT

HFS COMPANY

8718 Botts Lane
San Antonio, Texas 78217
www.hfscompany.com
jbianco@hfscompany.com
Phone: (210) 816-4784
Fax: (210) 881-6808

MICHAEL A. SHEPARD
NUMBER PE-2016040006
5/4/22

Construction and Facilities Management

VA U.S. Department of Veterans Affairs

Drawing Title: BLDG. 2 - SECURITY ENLARGED TDR PLANS	Phase: 100% CONSTRUCTION DOCUMENTS	Project Title: CINCINNATI VAMC EHRM INFRASTRUCTURE UPGRADES	Project Number: 539-21-701
Approved: Project Director	FULLY SPRINKLERED	Location: 3200 VINE ST. CINCINNATI, OH. 45220	Building Number: C2
		Issue Date: 04-MAY-2022 / Checked By: MS / Drawn By: TL	Drawing Number: TS-411-C.2.1
		Scale: 1/2" = 1'-0"	

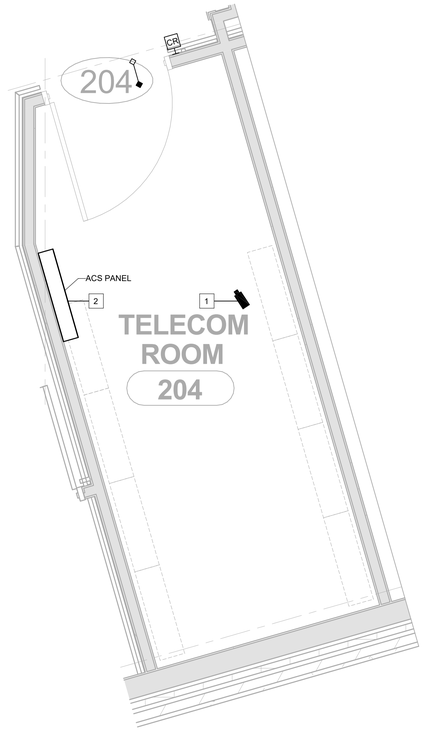

2 SECURITY BLDG 2 SECOND FLOOR TDR PLAN - TELECOM 204
1/2" = 1'-0"

GENERAL NOTES:

1. REFER TO SHEET TS-000 FOR GENERAL NOTES AND LEGENDS.
2. CONTRACTOR SHALL COORDINATE THE EQUIPMENT'S INSTALLATION AND FINAL LOCATION WITH THE ELECTRICAL AND MECHANICAL DIVISION. REFER TO ELECTRICAL, MECHANICAL AND PLUMBING DRAWINGS.

 # KEYED NOTES:

1. CAMERAS TO BE INSTALLED TO ACHEIVE AN UNOBSTRUCTED VIEW OF PERSONS ENTERING OR EXITING THE ROOM.
2. WALL MOUNTED ACCESS CONTROL PANEL MOUNTED AT 26 INCHES A.F.F.

TRUE NORTH PLAN NORTH

Description	Date

CONSULTANT

Ross&Baruzzini

LOW VOLTAGE/ IT
Ross & Baruzzini Inc.
1600 Riveredge Parkway NW
Suite 900
Atlanta, GA 30328

PROJECT MANAGEMENT

HFS COMPANY

8718 Botts Lane
San Antonio, Texas 78217
www.hfscompany.com
jbianco@hfscompany.com

Phone: (210) 816-4784
Fax: (210) 881-6808

MICHAEL S. SCHUMACHER
STATE OF OHIO
PE-2016040396
5/4/22

Construction and Facilities Management

VA U.S. Department of Veterans Affairs

Drawing Title: BLDG. 2 - SECURITY ENLARGED TDR PLANS	Phase: 100% CONSTRUCTION DOCUMENTS	Project Title: CINCINNATI VAMC EHRM INFRASTRUCTURE UPGRADES	Project Number: 539-21-701
			Building Number: C2
Approved: Project Director	FULLY SPRINKLERED	Location: 3200 VINE ST. CINCINNATI, OH. 45220	Drawing Number: TS-412-C.2.2
		Issue Date: 04-MAY-2022 / Checked By: MS / Drawn By: TL	
		Scale: 1/2" = 1'-0"	

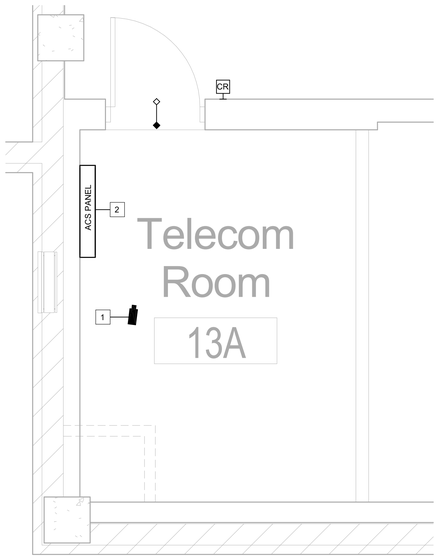

1 SECURITY BLDG 3 BASEMENT TDR PLAN - TELECOM 13A
1/2" = 1'-0"

GENERAL NOTES:

1. REFER TO SHEET TS-000 FOR GENERAL NOTES AND LEGENDS.
2. CONTRACTOR SHALL COORDINATE THE EQUIPMENT'S INSTALLATION AND FINAL LOCATION WITH THE ELECTRICAL AND MECHANICAL DIVISION. REFER TO ELECTRICAL, MECHANICAL AND PLUMBING DRAWINGS.

KEYED NOTES:

1. CAMERAS TO BE INSTALLED TO ACHEIVE AN UNOBSTRUCTED VIEW OF PERSONS ENTERING OR EXITING THE ROOM.
2. WALL MOUNTED ACCESS CONTROL PANEL MOUNTED AT 26 INCHES A.F.F.

TRUE NORTH PLAN NORTH

Description	Date

CONSULTANT

Ross&Baruzzini

LOW VOLTAGE/ IT
Ross & Baruzzini Inc.
1600 Riveredge Parkway NW
Suite 900
Atlanta, GA 30328

PROJECT MANAGEMENT

HFS COMPANY
8718 Botts Lane
San Antonio, Texas 78217
www.hfscompany.com
jbianco@hfscompany.com
Phone: (210) 816-4784
Fax: (210) 881-6808

MICHAEL A. SHEPARD
NUMBER PE-2016046006
5/4/22

Construction and Facilities Management

VA U.S. Department of Veterans Affairs

Drawing Title: BLDG. 3 - SECURITY ENLARGED TDR PLANS	Phase: 100% CONSTRUCTION DOCUMENTS	Project Title: CINCINNATI VAMC EHRM INFRASTRUCTURE UPGRADES	Project Number: 539-21-701
Approved: Project Director	FULLY SPRINKLERED	Location: 3200 VINE ST. CINCINNATI, OH. 45220	Building Number: C3
		Issue Date: 04-MAY-2022 / Checked By: MS / Drawn By: TL	Drawing Number: TS-420-C.3.B
		Scale: 1/2" = 1'-0"	

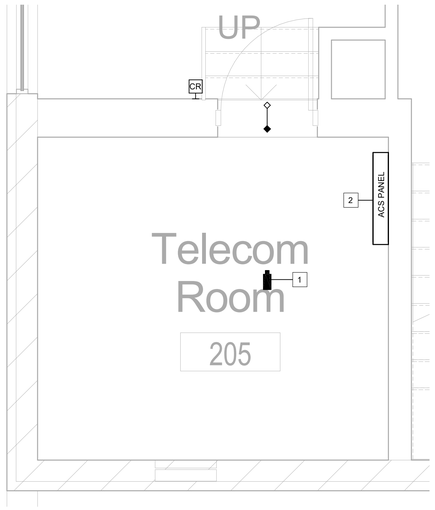

1 SECURITY BLDG 8 SECOND FLOOR TDR PLAN - TELECOM 205
1/2" = 1'-0"

GENERAL NOTES:

1. REFER TO SHEET TS-000 FOR GENERAL NOTES AND LEGENDS.
2. CONTRACTOR SHALL COORDINATE THE EQUIPMENT'S INSTALLATION AND FINAL LOCATION WITH THE ELECTRICAL AND MECHANICAL DIVISION. REFER TO ELECTRICAL, MECHANICAL AND PLUMBING DRAWINGS.

KEYED NOTES:

1. CAMERAS TO BE INSTALLED TO ACHEIVE AN UNOBSTRUCTED VIEW OF PERSONS ENTERING OR EXITING THE ROOM.
2. WALL MOUNTED ACCESS CONTROL PANEL MOUNTED AT 26 INCHES A.F.F.

TRUE NORTH PLAN NORTH

Description	Date

CONSULTANT

Ross&Baruzzini

LOW VOLTAGE/ IT
Ross & Baruzzini Inc.
1600 Riveredge Parkway NW
Suite 900
Atlanta, GA 30328

PROJECT MANAGEMENT

HFS COMPANY

8718 Botts Lane
San Antonio, Texas 78217
www.hfscompany.com
jbianco@hfscompany.com
Phone: (210) 816-4784
Fax: (210) 881-6808

MICHAEL A. SHEPARD
NUMBER PE-2016040006
5/4/22

Construction and Facilities Management

VA U.S. Department of Veterans Affairs

Drawing Title: BLDG. 8 - SECURITY ENLARGED TDR PLANS	Phase: 100% CONSTRUCTION DOCUMENTS	Project Title: CINCINNATI VAMC EHRM INFRASTRUCTURE UPGRADES	Project Number: 539-21-701
			Building Number: C8
Approved: Project Director	FULLY SPRINKLERED	Location: 3200 VINE ST. CINCINNATI, OH. 45220	Drawing Number: TS-430-C.8.2
		Issue Date: 04-MAY-2022 / Checked By: MS / Drawn By: TL	
		Scale: 1/2" = 1'-0"	

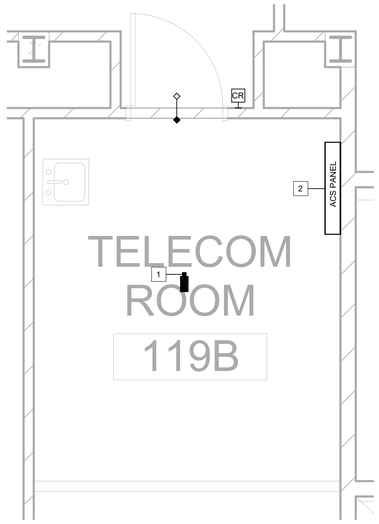

1 SECURITY BLDG 15 FIRST FLOOR TDR PLAN - TELECOM 119B
1/2" = 1'-0"

GENERAL NOTES:

1. REFER TO SHEET TS-000 FOR GENERAL NOTES AND LEGENDS.
2. CONTRACTOR SHALL COORDINATE THE EQUIPMENT'S INSTALLATION AND FINAL LOCATION WITH THE ELECTRICAL AND MECHANICAL DIVISION. REFER TO ELECTRICAL, MECHANICAL AND PLUMBING DRAWINGS.

KEYED NOTES:

1. CAMERAS TO BE INSTALLED TO ACHEIVE AN UNOBSTRUCTED VIEW OF PERSONS ENTERING OR EXITING THE ROOM.
2. WALL MOUNTED ACCESS CONTROL PANEL MOUNTED AT 26 INCHES A.F.F.

TRUE NORTH PLAN NORTH

Description	Date

CONSULTANT

Ross&Baruzzini

LOW VOLTAGE/ IT
Ross & Baruzzini Inc.
1600 Riveredge Parkway NW
Suite 900
Atlanta, GA 30328

PROJECT MANAGEMENT

HFS COMPANY

8718 Botts Lane
San Antonio, Texas 78217
www.hfscompany.com
jbianco@hfscompany.com
Phone: (210) 816-4784
Fax: (210) 881-6808

MICHAEL A. SHEPARD NUMBER PE-2016040006 5/4/22

Construction and Facilities Management

VA U.S. Department of Veterans Affairs

Drawing Title: BLDG. 15 - SECURITY ENLARGED TDR PLANS	Phase: 100% CONSTRUCTION DOCUMENTS	Project Title: CINCINNATI VAMC EHRM INFRASTRUCTURE UPGRADES	Project Number: 539-21-701
			Building Number: C15
Approved: Project Director	FULLY SPRINKLERED	Location: 3200 VINE ST. CINCINNATI, OH. 45220	Drawing Number: TS-440-C.15.1
		Issue Date: 04-MAY-2022 / Checked By: MS / Drawn By: TL	
		Scale: 1/2" = 1'-0"	

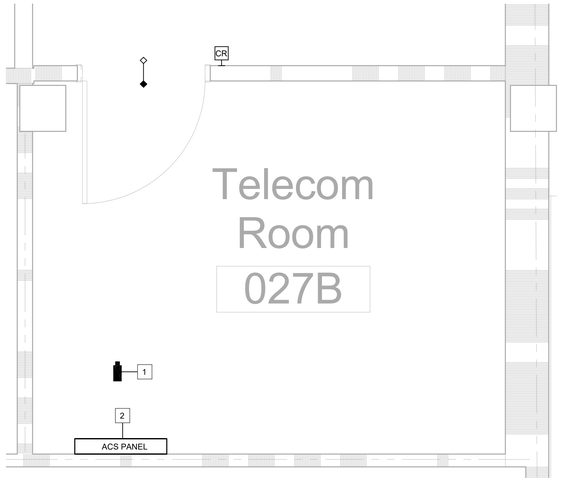

1 SECURITY BLDG 64 BASEMENT TDR PLAN -TELECOM 027D
1/2" = 1'-0"

GENERAL NOTES:

1. REFER TO SHEET TS-000 FOR GENERAL NOTES AND LEGENDS.
2. CONTRACTOR SHALL COORDINATE THE EQUIPMENT'S INSTALLATION AND FINAL LOCATION WITH THE ELECTRICAL AND MECHANICAL DIVISION. REFER TO ELECTRICAL, MECHANICAL AND PLUMBING DRAWINGS.

 # KEYED NOTES:

1. CAMERAS TO BE INSTALLED TO ACHEIVE AN UNOBSTRUCTED VIEW OF PERSONS ENTERING OR EXITING THE ROOM.
2. WALL MOUNTED ACCESS CONTROL PANEL MOUNTED AT 26 INCHES A.F.F.

TRUE NORTH PLAN NORTH

Description	Date

CONSULTANT
Ross&Baruzzini
LOW VOLTAGE/ IT
Ross & Baruzzini Inc.
1600 Riveredge Parkway NW
Suite 900
Atlanta, GA 30328

PROJECT MANAGEMENT
HFS COMPANY
8718 Botts Lane
San Antonio, Texas 78217
www.hfscompany.com
jbianco@hfscompany.com
Phone: (210) 816-4784
Fax: (210) 881-6808

STATE OF OHIO MICHAEL S. SHEPHERD NUMBER PE-2016060006 6/15/22 PROFESSIONAL ENGINEER

Construction and Facilities Management
VA U.S. Department of Veterans Affairs

Drawing Title: BLDG. 64 - SECURITY ENLARGED TDR PLANS	Phase: 100% CONSTRUCTION DOCUMENTS	Project Title: CINCINNATI VAMC EHRM INFRASTRUCTURE UPGRADES	Project Number: 539-21-701
Approved: Project Director	FULLY SPRINKLERED	Location: 3200 VINE ST. CINCINNATI, OH. 45220	Building Number: F64
		Issue Date: 15-JUNE-2022 / Checked By: MS / Drawn By: TL	Drawing Number: TS-450-F.64.B
		Scale: 1/2" = 1'-0"	

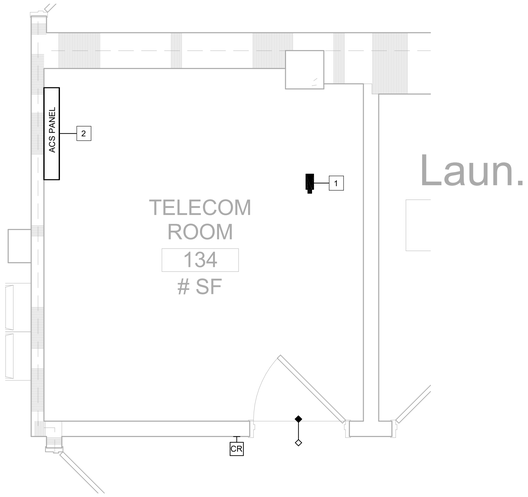

1 SECURITY BLDG 64 FIRST FLOOR TDR PLAN - TELECOM 134
1/2" = 1'-0"

GENERAL NOTES:

1. REFER TO SHEET TS-000 FOR GENERAL NOTES AND LEGENDS.
2. CONTRACTOR SHALL COORDINATE THE EQUIPMENT'S INSTALLATION AND FINAL LOCATION WITH THE ELECTRICAL AND MECHANICAL DIVISION. REFER TO ELECTRICAL, MECHANICAL AND PLUMBING DRAWINGS.

KEYED NOTES:

1. CAMERAS TO BE INSTALLED TO ACHEIVE AN UNOBSTRUCTED VIEW OF PERSONS ENTERING OR EXITING THE ROOM.
2. WALL MOUNTED ACCESS CONTROL PANEL MOUNTED AT 26 INCHES A.F.F.

TRUE NORTH PLAN NORTH

Description	Date

CONSULTANT

Ross&Baruzzini

LOW VOLTAGE/ IT
Ross & Baruzzini Inc.
1600 Riveredge Parkway NW
Suite 900
Atlanta, GA 30328

PROJECT MANAGEMENT

HFS COMPANY

8718 Botts Lane
San Antonio, Texas 78217
www.hfscompany.com
jbianco@hfscompany.com
Phone: (210) 816-4784
Fax: (210) 881-6808

MICHAEL A. SHEPARD
NUMBER PE-2016040006
5/4/22

Construction and Facilities Management

VA U.S. Department of Veterans Affairs

Drawing Title: BLDG. 64 - SECURITY ENLARGED TDR PLANS	Phase: 100% CONSTRUCTION DOCUMENTS	Project Title: CINCINNATI VAMC EHRM INFRASTRUCTURE UPGRADES	Project Number: 539-21-701
			Building Number: F64
Approved: Project Director	FULLY SPRINKLERED	Location: 3200 VINE ST. CINCINNATI, OH. 45220	Drawing Number: TS-451-F.64.1
		Issue Date: 04-MAY-2022 / Checked By: MS / Drawn By: TL / Scale: 1/2" = 1'-0"	

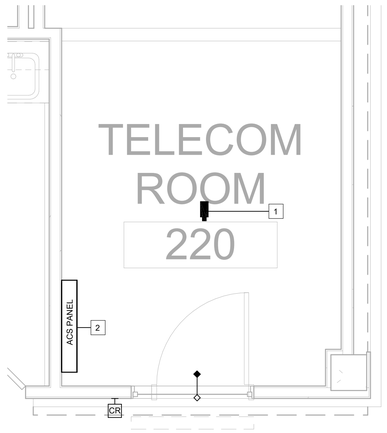

1 SECURITY BLDG 64 SECOND FLOOR TDR PLAN - TELECOM 220
1/2" = 1'-0"

GENERAL NOTES:

1. REFER TO SHEET TS-000 FOR GENERAL NOTES AND LEGENDS.
2. CONTRACTOR SHALL COORDINATE THE EQUIPMENT'S INSTALLATION AND FINAL LOCATION WITH THE ELECTRICAL AND MECHANICAL DIVISION. REFER TO ELECTRICAL, MECHANICAL AND PLUMBING DRAWINGS.

KEYED NOTES:

1. CAMERAS TO BE INSTALLED TO ACHEIVE AN UNOBSTRUCTED VIEW OF PERSONS ENTERING OR EXITING THE ROOM.
2. WALL MOUNTED ACCESS CONTROL PANEL MOUNTED AT 26 INCHES A.F.F.

TRUE NORTH PLAN NORTH

Description	Date

CONSULTANT

Ross&Baruzzini

LOW VOLTAGE/ IT
Ross & Baruzzini Inc.
1600 Riveredge Parkway NW
Suite 900
Atlanta, GA 30328

PROJECT MANAGEMENT

HFS COMPANY

8718 Botts Lane
San Antonio, Texas 78217
www.hfscompany.com
jbianco@hfscompany.com
Phone: (210) 816-4784
Fax: (210) 881-6808

MICHAEL A. SHEPARD
NUMBER PE-2016040006
5/4/22

Construction and Facilities Management

VA U.S. Department of Veterans Affairs

Drawing Title: BLDG. 64 - SECURITY ENLARGED TDR PLANS	Phase: 100% CONSTRUCTION DOCUMENTS	Project Title: CINCINNATI VAMC EHRM INFRASTRUCTURE UPGRADES	Project Number: 539-21-701
			Building Number: F64
Approved: Project Director	FULLY SPRINKLERED	Location: 3200 VINE ST. CINCINNATI, OH. 45220	Drawing Number: TS-452-F.64.2
		Issue Date: 04-MAY-2022 / Checked By: MS / Drawn By: TL / Scale: 1/2" = 1'-0"	

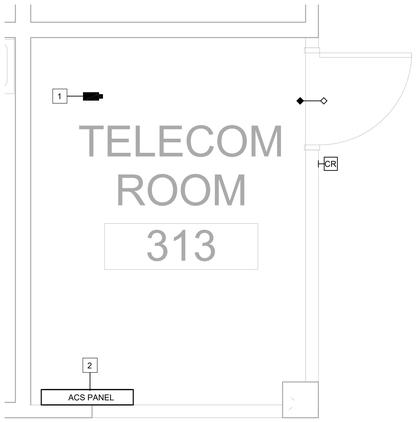

1 SECURITY BLDG 64 THIRD FLOOR TDR PLAN - TELECOM 313
1/2" = 1'-0"

GENERAL NOTES:

1. REFER TO SHEET TS-000 FOR GENERAL NOTES AND LEGENDS.
2. CONTRACTOR SHALL COORDINATE THE EQUIPMENT'S INSTALLATION AND FINAL LOCATION WITH THE ELECTRICAL AND MECHANICAL DIVISION. REFER TO ELECTRICAL, MECHANICAL AND PLUMBING DRAWINGS.

KEYED NOTES:

1. CAMERAS TO BE INSTALLED TO ACHEIVE AN UNOBSTRUCTED VIEW OF PERSONS ENTERING OR EXITING THE ROOM.
2. WALL MOUNTED ACCESS CONTROL PANEL MOUNTED AT 26 INCHES A.F.F.

TRUE NORTH PLAN NORTH

Description	Date

CONSULTANT

Ross&Baruzzini

LOW VOLTAGE/ IT
Ross & Baruzzini Inc.
1600 Riveredge Parkway NW
Suite 900
Atlanta, GA 30328

PROJECT MANAGEMENT

HFS COMPANY

8718 Botts Lane
San Antonio, Texas 78217
www.hfscompany.com
jbianco@hfscompany.com
Phone: (210) 816-4784
Fax: (210) 881-6808

MICHAEL A. SHEPARD NUMBER PE-2016026206 5/4/22

Construction and Facilities Management

VA U.S. Department of Veterans Affairs

Drawing Title: BLDG. 64 - SECURITY ENLARGED TDR PLANS	Phase: 100% CONSTRUCTION DOCUMENTS	Project Title: CINCINNATI VAMC EHRM INFRASTRUCTURE UPGRADES	Project Number: 539-21-701
			Building Number: F64
Approved: Project Director	FULLY SPRINKLERED	Location: 3200 VINE ST. CINCINNATI, OH. 45220	Drawing Number: TS-453-F.64.3
		Issue Date: 04-MAY-2022 / Checked By: MS / Drawn By: TL	
		Scale: 1/2" = 1'-0"	

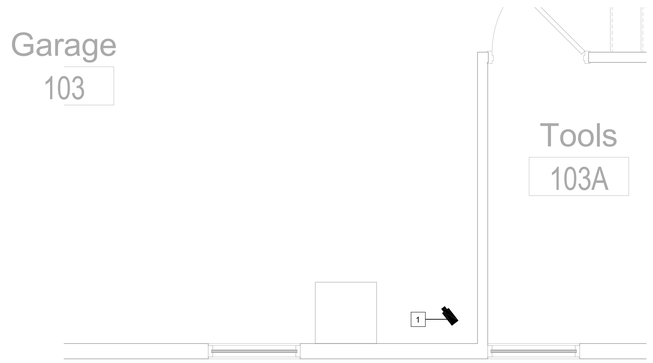

1 SECURITY BLDG 117 FIRST FLOOR TDR PLAN - GARAGE 103
1/2" = 1'-0"

GENERAL NOTES:

1. REFER TO SHEET TS-000 FOR GENERAL NOTES AND LEGENDS.
2. CONTRACTOR SHALL COORDINATE THE EQUIPMENT'S INSTALLATION AND FINAL LOCATION WITH THE ELECTRICAL AND MECHANICAL DIVISION. REFER TO ELECTRICAL, MECHANICAL AND PLUMBING DRAWINGS.

 # KEYED NOTES:

1. CAMERAS TO BE INSTALLED TO ACHEIVE AN UNOBSTRUCTED VIEW OF PERSONS ENTERING OR EXITING THE ROOM.
2. WALL MOUNTED ACCESS CONTROL PANEL MOUNTED AT 26 INCHES A.F.F.

TRUE NORTH PLAN NORTH

Description	Date

CONSULTANT

Ross&Baruzzini

LOW VOLTAGE/ IT
Ross & Baruzzini Inc.
1600 Riveredge Parkway NW
Suite 900
Atlanta, GA 30328

PROJECT MANAGEMENT

HFS COMPANY

8718 Botts Lane
San Antonio, Texas 78217
www.hfscompany.com
jbianco@hfscompany.com
Phone: (210) 816-4784
Fax: (210) 881-6808

MICHAEL A. SHEPARD
NUMBER PE-2016046006
5/4/22

Construction and Facilities Management

VA U.S. Department of Veterans Affairs

Drawing Title: BLDG. 117 - SECURITY ENLARGED TDR PLANS	Phase: 100% CONSTRUCTION DOCUMENTS	Project Title: CINCINNATI VAMC EHRM INFRASTRUCTURE UPGRADES	Project Number: 539-21-701
Approved: Project Director	FULLY SPRINKLERED	Location: 3200 VINE ST. CINCINNATI, OH. 45220	Building Number: F117
		Issue Date: 04-MAY-2022 / Checked By: MS / Drawn By: TL	Drawing Number: TS-460-F.117.1
		Scale: 1/2" = 1'-0"	

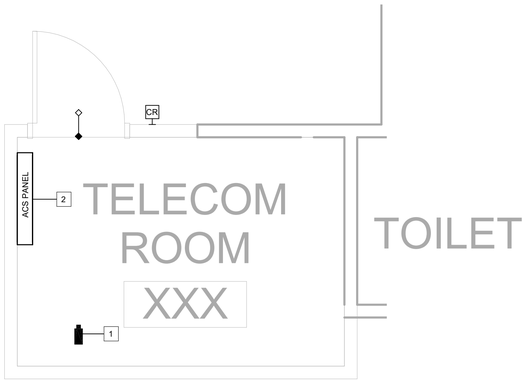

1 SECURITY BLDG TB FIRST FLOOR TDR PLAN - TELECOM XXX
1/2" = 1'-0"

GENERAL NOTES:

1. REFER TO SHEET TS-000 FOR GENERAL NOTES AND LEGENDS.
2. CONTRACTOR SHALL COORDINATE THE EQUIPMENT'S INSTALLATION AND FINAL LOCATION WITH THE ELECTRICAL AND MECHANICAL DIVISION. REFER TO ELECTRICAL, MECHANICAL AND PLUMBING DRAWINGS.

KEYED NOTES:

1. CAMERAS TO BE INSTALLED TO ACHEIVE AN UNOBSTRUCTED VIEW OF PERSONS ENTERING OR EXITING THE ROOM.
2. WALL MOUNTED ACCESS CONTROL PANEL MOUNTED AT 26 INCHES A.F.F.

TRUE NORTH PLAN NORTH

Description	Date

CONSULTANT

Ross&Baruzzini

LOW VOLTAGE/ IT
Ross & Baruzzini Inc.
1600 Riveredge Parkway NW
Suite 900
Atlanta, GA 30328

PROJECT MANAGEMENT

HFS COMPANY

8718 Botts Lane
San Antonio, Texas 78217
www.hfscompany.com
jbianco@hfscompany.com

Phone: (210) 816-4784
Fax: (210) 881-6808

MICHAEL A. SHEPARD
NUMBER PE-2016040006
5/4/22

Construction and Facilities Management

VA U.S. Department of Veterans Affairs

Drawing Title: BLDG. TB - SECURITY ENLARGED TDR PLANS	Phase: 100% CONSTRUCTION DOCUMENTS	Project Title: CINCINNATI VAMC EHRM INFRASTRUCTURE UPGRADES	Project Number: 539-21-701
			Building Number: CTB
Approved: Project Director	FULLY SPRINKLERED	Location: 3200 VINE ST. CINCINNATI, OH. 45220	Drawing Number: TS-470-C.TB.1
		Issue Date: 04-MAY-2022 / Checked By: MS / Drawn By: TL / Scale: 1/2" = 1'-0"	

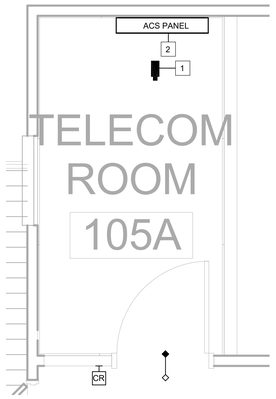

1 SECURITY BLDG TE FIRST FLOOR TDR PLAN - TELECOM 105A
1/2" = 1'-0"

GENERAL NOTES:

1. REFER TO SHEET TS-000 FOR GENERAL NOTES AND LEGENDS.
2. CONTRACTOR SHALL COORDINATE THE EQUIPMENT'S INSTALLATION AND FINAL LOCATION WITH THE ELECTRICAL AND MECHANICAL DIVISION. REFER TO ELECTRICAL, MECHANICAL AND PLUMBING DRAWINGS.

KEYED NOTES:

1. CAMERAS TO BE INSTALLED TO ACHEIVE AN UNOBSTRUCTED VIEW OF PERSONS ENTERING OR EXITING THE ROOM.
2. WALL MOUNTED ACCESS CONTROL PANEL MOUNTED AT 26 INCHES A.F.F.

TRUE NORTH PLAN NORTH

Description	Date

CONSULTANT

Ross&Baruzzini

LOW VOLTAGE/ IT
Ross & Baruzzini Inc.
1600 Riveredge Parkway NW
Suite 900
Atlanta, GA 30328

PROJECT MANAGEMENT

HFS COMPANY

8718 Botts Lane
San Antonio, Texas 78217
www.hfscompany.com
jbianco@hfscompany.com
Phone: (210) 816-4784
Fax: (210) 881-6808

MICHAEL A. SHEPARD
NUMBER PE-2016040006
5/4/22

Construction and Facilities Management

VA U.S. Department of Veterans Affairs

Drawing Title: BLDG. TE - SECURITY ENLARGED PLANS	Phase: 100% CONSTRUCTION DOCUMENTS	Project Title: CINCINNATI VAMC EHRM INFRASTRUCTURE UPGRADES	Project Number: 539-21-701
			Building Number: CTE
Approved: Project Director	FULLY SPRINKLERED	Location: 3200 VINE ST. CINCINNATI, OH. 45220	Drawing Number: TS-480-C.TE.1
		Issue Date: 04-MAY-2022 / Checked By: MS / Drawn By: TL	
		Scale: 1/2" = 1'-0"	

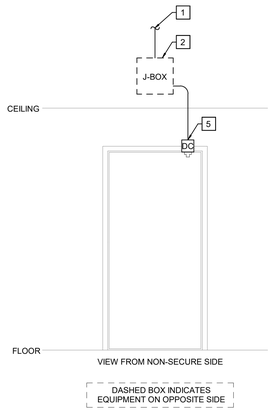

3 SD - TYPE 1
N.T.S.

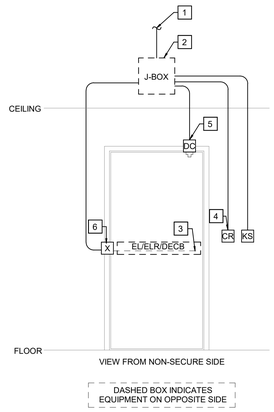

2 SD - TYPE 2
N.T.S.

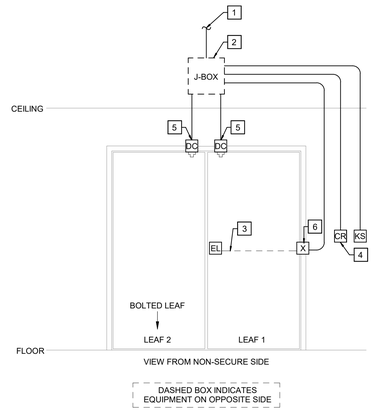

1 DD - TYPE 1
N.T.S.

ABBREVIATIONS:

A	LOCAL ALARM
AO	AUTO OPENER/PUSH PLATE (BY OTHERS)
AV	AUDIBLE/VISUAL DEVICE
CR	CARD READER/KEYPAD CARD READER
DD	DOUBLE/DUAL DOOR TYPE
EB	EXIT BUTTON
EL	ELECTRIC LOCKSET WITH BUILT-IN REQUEST TO EXIT
ELR	ELECTRIC LATCH RETRACTION WITH BUILT-IN REQUEST TO EXIT
ES	ELECTRIC STRIKE
DC	DOOR CONTACT
DECB	DELAYED EGRESS CRASHBAR LOCK WITH BUILT-IN REQUEST TO EXIT
IC	INTERCOM
IDH	INTEGRATED INTO DOOR HARDWARE
J-BOX	JUNCTION BOX
KS	KEYED SWITCH OVERRIDE
LM	LOCKING MECHANISM FOR SLIDING DOORS
ML	MAGNETIC LOCK/DELAYED EGRESS MAGLOCK
MS	MOTION SENSOR REQUEST TO EXIT
PJ	POWER JUMP ELECTRIC TRANSFER
PS	120V POWER COORDINATION (BY OTHERS)
RD	REVOLVING DOOR TYPE
SD	SINGLE DOOR TYPE
X	POWER TRANSFER HINGE

GENERAL NOTES:

1. REFER TO ACCESS CONTROL SCHEDULE FOR ADDITIONAL INFORMATION.
2. DEVICE LOCATIONS SHOWN ON DETAILS DO NOT DEPICT ACTUAL PLACEMENT IN RELATION TO DOORWAY. REFER TO FLOOR PLAN DRAWINGS FOR CARD READER LOCATIONS.
3. LOCATE DOOR ACTUATOR BUTTONS AS SHOWN ON PLANS. IF BUTTON IS FUTHER THAN 24" FROM DOOR OPENING, SIGNAGE MAY BE REQUIRED TO NOTIFY PERSONNEL AS TO WHICH BUTTON OPENS WHICH DOOR.
4. COORDINATE AUTO OPERATOR PUSH PAD QUANTITY AND LOCATION WITH ARCHITECTURAL PLANS. INTERFACE DOOR LOCKING DEVICES WITH AUTO OPERATORS, HOLD OPENS, AND HANDICAP ASSIST DOOR OPENERS ON SECURITY DOORS.
5. CONFIGURE AUTO OPERATORS AS A REX INPUT TO THE SECURITY SYSTEM.
6. ALL CONDUIT AND CABLING SHALL BE CONCEALED. IF NOT NOTED IN THE DETAIL NOTES, ALL CONDUITS SHALL BE 3/4".

KEYED NOTES:

1. PATHWAY TO SECURITY PANEL LOCATIONS: PROVIDE (1) 1" CONDUIT TO ACCESSIBLE CEILING. REFER TO CONSTRUCTION DOCUMENT PACKAGE FOR CABLING REQUIREMENTS.
2. JUNCTION BOX: PROVIDE 8" X 8" X 4" JUNCTION BOX WITH HINGED COVER. LOCATE WITHIN ACCESSIBLE CEILING SPACE (OR PROVIDE ACCESS PANEL FOR HARD-LID LOCATIONS) AS CLOSE TO THE DOORWAY AS POSSIBLE. MOUNT ON THE SECURE SIDE OF THE DOOR.
3. ROUTE WIRING THROUGH PROVIDED PATHWAY WITHIN DOOR TO ELECTRIFIED HARDWARE.
4. DEVICE PATHWAY: PROVIDE (1) 4"X4" SQUARE BOX WITH 1-GANG MUD RING. PROVIDE (1) 3/4" CONDUIT ROUTED FROM DEVICE TO JUNCTION BOX ABOVE THE DOOR. UNLESS NOTED OTHERWISE. REFER TO FLOOR PLAN DRAWINGS FOR EXACT LOCATION OF DEVICE AND DEVICE TYPE. REFER TO CONSTRUCTION DOCUMENT PACKAGE FOR CABLING REQUIREMENTS.
5. PATHWAY TO DOOR HARDWARE: PROVIDE (1) 3/4" CONDUIT ROUTED FROM JUNCTION BOX TO HARDWARE MOUNTED IN OR AROUND DOOR FRAME. COORDINATE CONDUIT TERMINATION REQUIREMENTS WITH DOOR HARDWARE PROVIDER AND DEVICE MANUFACTURER. ROUTE CONDUIT WITHIN DOOR FRAME WHERE REQUIRED. FOR DOOR CONTACT DEVICE (DC), PROVIDE (1) 1" HOLE IN DOOR FRAME. REFER TO CONSTRUCTION DOCUMENT PACKAGE FOR CABLING REQUIREMENTS.
6. POWER TRANSFER HINGE: PROVIDE (1) 3/4" CONDUIT ROUTED FROM DOOR HINDGE TO JUNCTION BOX ABOVE THE DOOR. REFER TO CONSTRUCTION DOCUMENT PACKAGE FOR CABLING REQUIREMENTS.
7. MOTION REQUEST TO EXIT PATHWAY: PROVIDE (1) 4"X4" SQUARE BOX WITH 1-GANG MUD RING MOUNTED HORIZONTALLY. PROVIDE (1) 3/4" CONDUIT ROUTED FROM DEVICE TO JUNTION BOX. MOUNT DEVICE CENTERED ABOVE DOORWAY. IF WALL MOUNTING IS NOT DEASIBLE DUE TO OBSTRUCTION, MOUNT DEVICE IN CEILING PER MANUFACTURER RECOMMENDATIONS. REFER TO CONSTRUCTION DOCUMENT PACKAGE FOR CABLING REQUIREMENTS.
8. ELECTRIC STRIKE: PROVIDE (1) 3/4" CONDUIT TO JUNCTION BOX ABOVE THE DOOR. REFER TO CONSTRUCTION DOCUMENT PACKAGE FOR CABLING REQUIREMENTS. FOR DOUBLE/DUAL DOORS, IF MULLION IS SPECIFIED, THE ELECTRIC STRIKE AND CONDUIT MOUNT WITHIN MULLION. OTHERWISE THE ELECTRIC STRIKE MOUNTS WITHIN BOLTED DOOR LEAF AND REQUIRES TRANSFER AND PATHWAY THROUGH DOOR.
9. AUTO OPERATOR: THE AUTO OPENER AND ASSOCIATED PUSH PLATES ARE SPECIFIED ELSEWHERE WITHIN THE CONSTRUCTION DOCUMENT PACKAGE. FOR ADA INTEGRAL TO ACCESS CONTROL DOORS, ROUTE ALL CONDUITS TO JUNCTION BOX. AT DOOR FRAME, ROUTE (1) 3/4" CONDUIT TO JUNCTION BOX. COORDINATE WITH DOOR HARDWARE PROVIDER AND OTHER TRADES PRIOR TO INSTALL.
10. DEVICE MOUNTED ON PEDESTAL PATHWAY: PROVIDE (1) 4"X4" SQUARE BOX WITH 1-GANG MUD RING. PROVIDE (1) 3/4" CONDUIT ROUTED FROM DEVICE MOUNTED ON PEDESTAL, UNDERGROUND, UP WALL TO JUNCTION BOX ABOVE THE DOOR. REFER TO FLOOR PLAN DRAWINGS FOR EXACT LOCATION OF DEVICE AND DEVICE TYPE. REFER TO CONSTRUCTION DOCUMENT PACKAGE FOR CABLING REQUIREMENTS.
11. DOOR CONTACT SURFACE MOUNTED: SURFACE MOUNT DEVICE AT DOOR. ROUTE CABLING CONCEALED TO LOCK OR JUNCTION BOX LOCATION AS SHOWN IN THE DETAIL. REFER TO FLOOR PLAN DRAWINGS FOR EXACT LOCATION OF DEVICE. REFER TO CONSTRUCTION DOCUMENT PACKAGE FOR CABLING REQUIREMENTS.
12. SYSTEM SPECIFIC JUNCTION BOX: PROVIDE (1) 3/4" CONDUIT FROM SYSETM JUNCTION BOX TO JUNCTION BOX ABOVE THE DOOR. REFER TO CONSTRUCTION DOCUMENT PACKAGE FOR CABLING REQUIREMENTS.
13. CARD READER WITHIN ELEVATOR CAB: PROVIDE (1) 3/4" CONDUIT ROUTED TO ELEVATOR MACHINE ROOM. REFER TO FLOOR PLAN DRAWINGS FOR EXACT LOCATION OF DEVICE AND ASSOCIATED ELEVATOR. ELEVATOR TRAVEL CABLE BY OTHERS.

Description	Date

CONSULTANT

Ross&Baruzzini

LOW VOLTAGE/ IT
Ross & Baruzzini Inc.
1600 Riveredge Parkway NW
Suite 900
Atlanta, GA 30328

PROJECT MANAGEMENT

HFS COMPANY
8718 Botts Lane
San Antonio, Texas 78217
www.hfscompany.com
jbianco@hfscompany.com
Phone: (210) 816-4784
Fax: (210) 881-6808

MICHAEL A. BIBERIAN
NUMBER PE-2016042095
5/4/22

Construction and Facilities Management

VA U.S. Department of Veterans Affairs

Drawing Title: SECURITY - TYPICAL DETAILS	Phase: 100% CONSTRUCTION DOCUMENTS	Project Title: CINCINNATI VAMC EHRM INFRASTRUCTURE UPGRADES	Project Number: 539-21-701
Approved: Project Director	FULLY SPRINKLERED	Location: 3200 VINE ST. CINCINNATI, OH. 45220	Building Number:
		Issue Date: 04-MAY-2022 / Checked By: MS / Drawn By: TL	Drawing Number: TS-500
		Scale: N.T.S.	

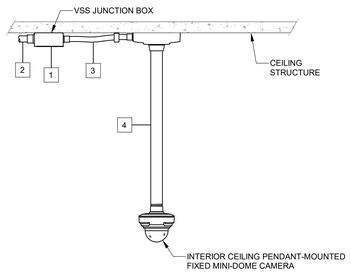

2 INTERIOR FIXED PENDANT OPEN CEILING MOUNT
N.T.S.

GENERAL NOTES:

1. REFER TO SPECIFICATIONS FOR ADDITIONAL DETAILS RELATED TO CLOSED CIRCUIT TELEVISION (CCTV) REQUIREMENTS AND SCOPE.
2. THE CCTV CAMERA AND DEVICE DETAILS ARE DIAGRAMMATIC IN NATURE AND SHOW GENERAL INSTALLATION REQUIREMENTS PER DEVICE. VERIFY FIELD CONDITIONS PER LOCATION PRIOR TO CONSTRUCTION.
3. ALL CONDUIT TO BE RUN CONCEALED UNO. LOCATE CCTV JUNCTION BOX ABOVE CEILING IN ACCESSIBLE LOCATION. SUPPORT ALL CONDUIT AND CAMERA FROM STRUCTURE.
4. PROVIDE CCTV CAMERA, LENS, DOME ENCLOSURE AND MOUNT AS INDICATED ON PLANS AND SPECIFICATIONS. PROVIDE ALL MOUNTING AND SUPPORT HARDWARE AS REQUIRED BY THE MANUFACTURER. PROVIDE ALL CONNECTIONS OF FLEXIBLE CONDUIT AND CABLING TO CCTV JUNCTION BOX.
5. CONDUIT AND CABLING REQUIREMENTS DEFINED IN CCTV JUNCTION BOX DETAILS. REFERENCE CCTV JUNCTION BOX DETAILS FOR FURTHER INFORMATION.
6. EXPOSED CONDUIT AND HARDWARE MAY BE REQUIRED TO LOCATE CAMERA CORRECTLY AND PROVIDE ACCESS TO ACCESSIBLE CEILING FOR CONDUIT RUN TO THE JBOX. PROVIDE JUNCTION BOXES AS NEEDED. REFER TO PROJECT SPECIFICATIONS REGARDING PAINTING REQUIREMENTS FOR EXPOSED CONDUIT AND MOUNTING HARDWARE
7. FINISHED CEILING, WALL, AND STRUCTURAL DECK CONSTRUCTION SHOWN FOR REFERENCE ONLY. REFER TO ARCHITECTURAL AND STRUCTURAL DRAWINGS DETAILED INFORMATION.

KEYED NOTES:

1. STANDARD CCTV JUNCTION BOX.
2. PROVIDE RIGID CONDUIT AND CCTV CABLING TO TERMINATING TR OR SECURITY ENCLOSURE.
3. MINIMUM 20mm (3/4-in) FLEXIBLE OR RIGID METALLIC CONDUIT. FOR EXTERIOR CAMERAS PROVIDE LIQUID TIGHT CONDUIT.
4. PENDANT CEILING MOUNT WITH 39mm (1.5-INCH) NPT THREADED PIPE.

Description	Date

CONSULTANT

Ross&Baruzzini

LOW VOLTAGE/ IT
Ross & Baruzzini Inc.
1600 Riveredge Parkway NW
Suite 900
Atlanta, GA 30328

PROJECT MANAGEMENT

HFS COMPANY
8718 Botts Lane
San Antonio, Texas 78217
www.hfscompany.com
jbianco@hfscompany.com
Phone: (210) 816-4784
Fax: (210) 881-6808

MICHAEL A. SHEPARD
NUMBER PE-2016040006
5/4/22

Construction and Facilities Management

VA U.S. Department of Veterans Affairs

Drawing Title: SECURITY - TYPICAL DETAILS

Approved: Project Director

Phase: 100% CONSTRUCTION DOCUMENTS

FULLY SPRINKLERED

Project Title: CINCINNATI VAMC EHRM INFRASTRUCTURE UPGRADES

Location: 3200 VINE ST. CINCINNATI, OH. 45220

Project Number: 539-21-701

Building Number:

Drawing Number: TS-501

Issue Date: 04-MAY-2022

Scale: As indicated

Checked By: MS

Drawn By: TL