US Army Corps
of Engineers®
Omaha District

REPLACEMENT OF LEFT ABUTMENT COLLECTOR PIPE SYSTEM BIG BEND DAM, SOUTH DAKOTA MISSOURI RIVER

STEP 1 SOLICITATION (95% DRAWING SET)

SOLICITATION NO.: W9128F23B0005
CONTRACT NO.: W9128F23Cxxxx
DATE: NOVEMBER 2022

THIS PROJECT WAS DESIGNED BY THE OMAHA DISTRICT OF THE US ARMY CORPS OF ENGINEERS. THE INITIALS OR SIGNATURES AND REGISTRATION DESIGNATIONS OF INDIVIDUALS APPEAR ON THESE PROJECT DOCUMENTS WITHIN THE SCOPE OF THEIR EMPLOYMENT AS REQUIRED BY ER 1110-1-8152

SIGNATURES AFFIXED BELOW INDICATE OFFICIAL RECOMMENDATION AND APPROVAL OF DRAWINGS IN THIS SET.

01-Jan-2000 DATE CHIEF, DAM SAFETY PRODUCTION CENTER	SUBMITTED BY: CHIEF: DAM SAFETY SECTION	US Army Corps of Engineers Omaha District
	SUBMITTED BY: CHIEF: GEOLOGY SECTION	
01-Jan-2000 DATE CHIEF, HYDROLOGIC ENGINEERING BRANCH	SUBMITTED BY: CHIEF: HYDRAULICS SECTION	
	SUBMITTED BY: CHIEF: MIL. MUN. & ENV. SCI. SECTION	
01-Jan-2000 DATE CHIEF, GEOTECHNICAL SCIENCES BRANCH	SUBMITTED BY: CHIEF: XXX SECTION	
	SUBMITTED BY: CHIEF: XXX SECTION	
01-Jan-2000 DATE CHIEF, ENGINEERING DIVISION, P.E.	SUBMITTED BY: CHIEF: XXX SECTION	
	SUBMITTED BY: CAD PROJECT COORDINATOR	

US ARMY CORPS OF ENGINEERS
OMAHA DISTRICT

MARK	DESCRIPTION	DATE	APPR.	MARK	DESCRIPTION	DATE	APPR.

U. S. ARMY ENGINEER DISTRICT
CORPS OF ENGINEERS
OMAHA, NEBRASKA

DESIGNED BY: JPB/MCB
DWN BY: CLR/BJL
CKD BY: RJC/BJL
SUBMITTED BY: ALB
DATE: NOVEMBER 2022
SOLICITATION NO.: W9128F23B0005
CONTRACT NO.: W9128F23Cxxxx
FILE NUMBER:
FILE NAME: B890U001DGN
SIZE: 36X22
PLOT SCALE:
PLOT DATE:

BIG BEND DAM - LAKE SHARPE
FORT THOMPSON, SOUTH DAKOTA
REPLACEMENT OF LEFT ABUTMENT
COLLECTOR PIPE SYSTEM
COVER

SHEET IDENTIFICATION NUMBER
G-001

%PRODUCTION DATA 1%
%PRODUCTION DATA 2% %PRODUCTION DATA 3% %PRODUCTION DATA 4%

INDEX

GENERAL

DESIGN FILE	SHEET ID NO.	DESCRIPTION
BB90G-001.DGN	G-001	COVER
BB90G-002.DGN	G-002	INDEX AND VICINITY MAP
BB90G-101.DGN	G-101	GENERAL PLAN, SITE ACCESS, AND CONTROL DATA
	CIVIL	
BB90C-101.DGN	C-101	EXISTING CONDITIONS
BB90C-201.DGN	C-201	WORK PLAN
BB90C-300.DGN	C-300	DEMOLITION PLAN
BB90C-301.DGN	C-301	TOE DRAIN REPLACEMENT - PLAN, PROFILE AND SECTION
BB90C-302.DGN	C-302	TOE DRAIN OUTFALL REPLACEMENT - PLAN, PROFILE AND SECTIONS
BB90C-303.DGN	C-303	RW COLLECTOR PIPE REPLACEMENT & NEW OUTFALLS - PLAN, PROFILE & SECTIONS - SHEET 1 OF 2
BB90C-304.DGN	C-304	RW COLLECTOR PIPE REPLACEMENT & NEW OUTFALLS - PLAN, PROFILE & SECTIONS - SHEET 2 OF 2
BB90C-305.DGN	C-305	24" CMP EXTENSION (CULVERT "A") - PLAN (GRADING) AND PROFILE
BB90C-306.DGN	C-306	24-INCH RCP EXTENSION - PLAN, SECTION, AND RIPRAP APRON DETAILS
BB90C-501.DGN	C-501	NEW MANHOLE, RISER AND PIEZOMETER DETAILS
BB90C-502.DGN	C-502	EXISTING RELIEF WELL AND MANHOLE DETAILS
BB90C-503.DGN	C-503	EXISTING RELIEF WELL AND MANHOLE ABANDONMENT DETAILS
BB90C-504.DGN	C-504	REPLACEMENT RELIEF WELL OUTFALL DETAILS
BB90C-505.DGN	C-505	PIPE BEDDING AND BACKFILL DETAILS

RESOURCE (FOR INFORMATION ONLY)

DESIGN FILE	SHEET ID NO.	DESCRIPTION
BB90C-FIO_DRAWINGS.DGN	FIO-1	RELIEF WELL MODIFICATION PLAN AND DETAIL PLAN (1966)
BB90C-FIO_DRAWINGS.DGN	FIO-2	RELIEF WELL MODIFICATION PROFILES (1966)
BB90C-FIO_DRAWINGS.DGN	FIO-3	RELIEF WELL MODIFICATION DETAILS (1966)
BB90C-FIO_DRAWINGS.DGN	FIO-4	EMBANKMENT FOUNDATION PIEZOMETERS LINE "J" STATION 126+00
BB90C-FIO_DRAWINGS.DGN	FIO-5	EMBANKMENT FOUNDATION PIEZOMETERS LINE "H" STATION 121+00
BB90C-FIO_DRAWINGS.DGN	FIO-6	RELIEF WELL AND RELIEF WELL PIEZOMETER OBSERVATIONS
BB90C-FIO_DRAWINGS.DGN	FIO-7	SOIL BORING LOCATION MAP
BB90C-FIO_DRAWINGS.DGN	FIO-8	GEOLOGICAL PROFILE A-A' SUBSURFACE INVESTIGATION
BB90C-FIO_DRAWINGS.DGN	FIO-9	GEOLOGICAL PROFILE B-B' SUBSURFACE INVESTIGATION
BB90C-FIO_DRAWINGS.DGN	FIO-10	GEOLOGICAL PROFILE C-C' SUBSURFACE INVESTIGATION
BB90C-FIO_DRAWINGS.DGN	FIO-11	GEOLOGICAL PROFILE A-A' REPLACEMENT WELLS
BB90C-FIO_DRAWINGS.DGN	FIO-12	CHANNEL STABILIZATION RIPRAP - D/S LEFT ABUTMENT SUBDRAIN - 2010

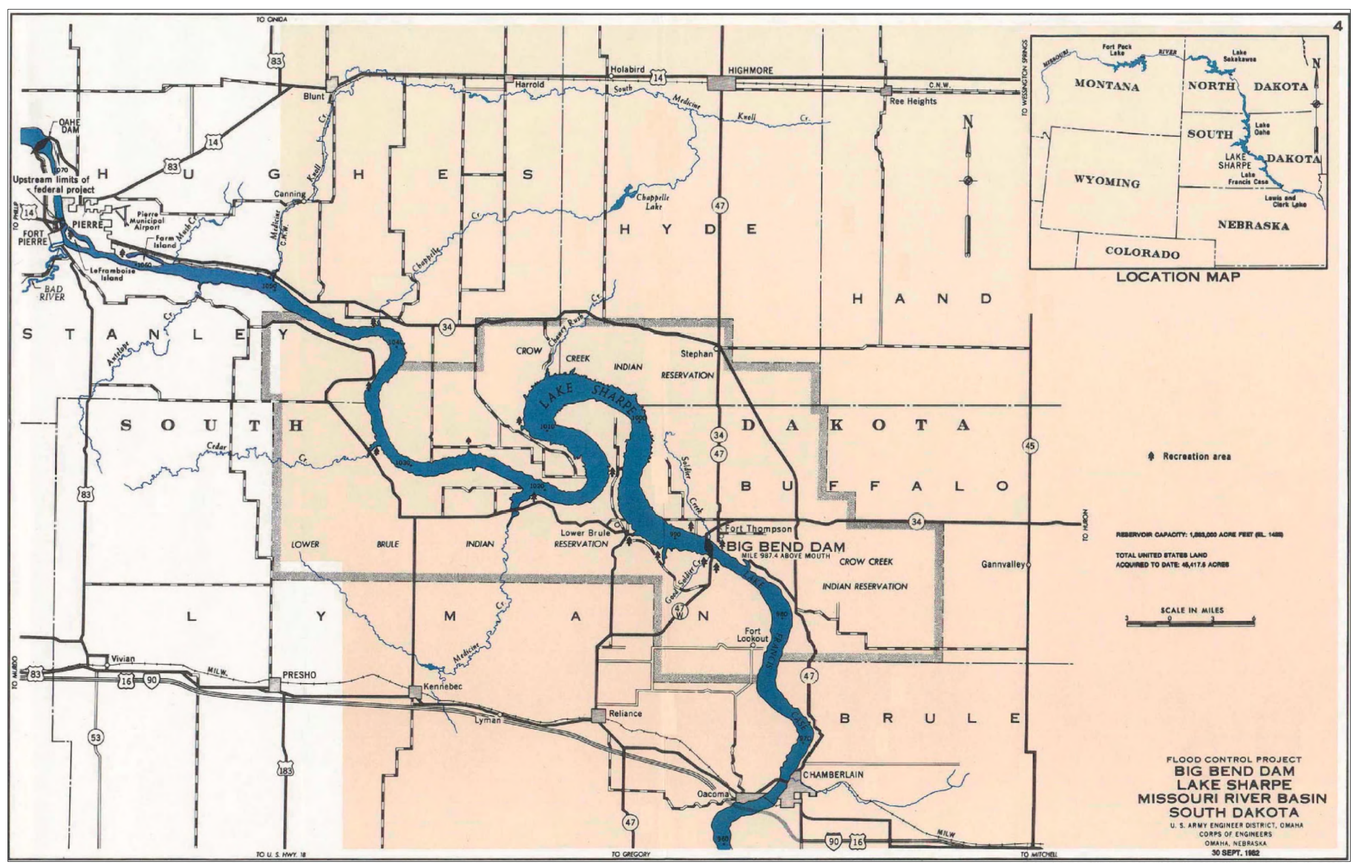

VICINITY MAP

NO SCALE

ABBREVIATION LEGEND:

RW	RELIEF WELL
PZ	PIEZOMETER
BOP	BOTTOM OF PIPE
EL	ELEVATION
FT	FEET
EXIST	EXISTING

INDEX LEGEND:

1. SHEET IDENTIFICATION NUMBERS:

DISCIPLINE DESIGNATOR w/ Level 2 Designator *(see A/E/C CADD STANDARD RELEASE 3.0 for Level 2 Designator)*

SHEET TYPE DESIGNATOR

M - 2 0 1

SHEET SEQUENCE NUMBER

2. DISCIPLINE DESIGNATORS:

G	GENERAL
H	HAZARDOUS MATERIALS
V	SURVEY / MAPPING
B	GEOTECHNICAL
C	CIVIL
L	LANDSCAPE
S	STRUCTURAL
A	ARCHITECTURAL
I	INTERIORS
Q	EQUIPMENT
F	FIRE PROTECTION
P	PLUMBING
D	PROCESS
M	MECHANICAL
E	ELECTRICAL
T	TELECOMMUNICATIONS
R	RESOURCE

3. SHEET TYPE DESIGNATORS:

0	GENERAL
1	PLANS
2	ELEVATIONS
3	SECTIONS
4	LARGE-SCALE VIEWS
5	DETAILS
6	SCHEDULES & DIAGRAMS
7	USER DEFINED
8	USER DEFINED
9	3D REPRESENTATIONS
F	FOR INFORMATION ONLY

US ARMY CORPS OF ENGINEERS
OMAHA DISTRICT

MARK	DESCRIPTION	DATE	APPR.	MARK	DESCRIPTION	DATE	APPR.

U. S. ARMY ENGINEER DISTRICT
CORPS OF ENGINEERS
OMAHA, NEBRASKA

DESIGNED BY: KPB/CLR | DATE: NOVEMBER 2022
DWN BY: CLR/BAL | CKD BY: RJC/BAL | SOLICITATION NO.: W912BF-23-B-0005
SUBMITTED BY: ALB | CONTRACT NO.: W912BF-23-C-xxxx
FILE NAME: BB90C001.DGN | FILE NUMBER:
SIZE: 33 X 22 | PLOT SCALE: | PLOT DATE:

BIG BEND DAM - LAKE SHARPE
FORT THOMPSON, SOUTH DAKOTA
REPLACEMENT OF LEFT ABUTMENT
COLLECTOR PIPE SYSTEM
INDEX AND VICINITY MAP

SHEET IDENTIFICATION NUMBER
G-002

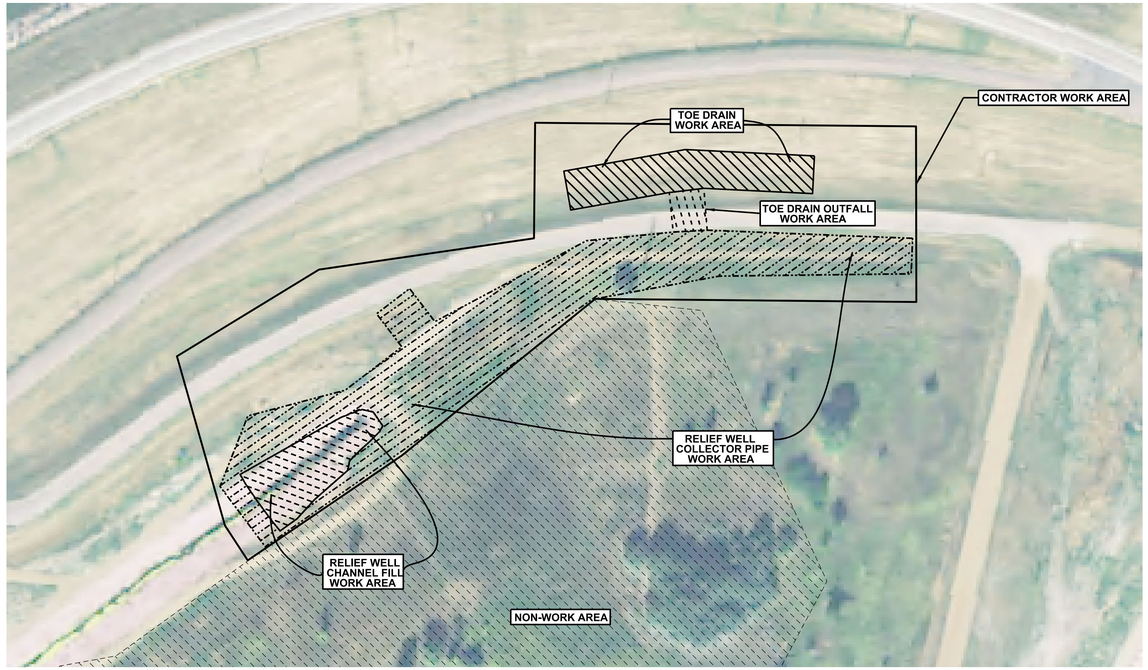

WORK AREA CALLOUT

SCALE: 1 INCH = 100 FEET
100' 0 100'

SCALE: 1 INCH = 400 FEET
400' 0 400'

GENERAL PLAN AND SITE ACCESS

CONTROL DATA

NAME	NORTHING	EASTING	ELEVATION	DESCRIPTION
PD-1	631736.654	2197082.766	1462.933	PEDESTAL
PD- 4	621139.964	2201295.394	1490.43	PEDESTAL

CONTRACTOR PARKING AREA

NAME	NORTHING	EASTING	DESCRIPTION
MA1_POV1	628524.201	2199897.708	MOBILIZATION AREA 1 POV PARKING
MA1_POV2	628552.527	2199921.514	MOBILIZATION AREA 1 POV PARKING
MA1_POV3	628525.08	2199978.334	MOBILIZATION AREA 1 POV PARKING
MA1_POV4	628491.919	2200017.144	MOBILIZATION AREA 1 POV PARKING
MA1_POV5	628448.319	2199971.016	MOBILIZATION AREA 1 POV PARKING

STAGING AREA

NAME	NORTHING	EASTING	DESRIPTION
MA2_SAA-1	627815.111	2200910.183	MOBILIZATION AREA 2 EQUIPMENT STAGING / DISPOSAL
MA2_SAA-2	628017.658	2200738.641	MOBILIZATION AREA 2 EQUIPMENT STAGING / DISPOSAL
MA2_SAA-3	628145.919	2200922.447	MOBILIZATION AREA 2 EQUIPMENT STAGING / DISPOSAL
MA2_SAA-4	627902.803	2201132.243	MOBILIZATION AREA 2 EQUIPMENT STAGING / DISPOSAL
MA3_SAB-1	628242.421	2201644.914	MOBILIZATION AREA 3 EQUIPMENT STAGING / DISPOSAL
MA3_SAB-2	628369.074	2201505.509	MOBILIZATION AREA 3 EQUIPMENT STAGING / DISPOSAL
MA3_SAB-3	628449.716	2201570.292	MOBILIZATION AREA 3 EQUIPMENT STAGING / DISPOSAL
MA3_SAB-4	628326.684	2201746.943	MOBILIZATION AREA 3 EQUIPMENT STAGING / DISPOSAL
MA4_PTC-1	628276.164	2201707.523	MOBILIZATION AREA 4 EQUIPMENT STAGING / DISPOSAL
MA4_PTC-2	628102.546	2201897.558	MOBILIZATION AREA 4 EQUIPMENT STAGING / DISPOSAL
MA4_PTC-3	628199.595	2201970.07	MOBILIZATION AREA 4 EQUIPMENT STAGING / DISPOSAL
MA4_PTC-4	628342.923	2201800.89	MOBILIZATION AREA 4 EQUIPMENT STAGING / DISPOSAL

PERMANENT GATE LOCATIONS

NAME	NORTHING	EASTING
NEW PERMANENT GATE LOCATION	1627772.453	2200855.469
NEW PERMANENT GATE LOCATION	2628619.621	2201989.544

HERRING BONE DRAINAGE AREA: THIS AREA IS NOT TO BE DISTURBED DURING THIS CONTRACT. CONTRACTOR WILL REMAIN OUTSIDE OF THIS AREA TO NOT DAMAGE SHALLOW HERRING BONE DRAIN AND RISERS.

NAME	NORTHING	EASTING	DESCRIPTION
HBDA_1	628279.42	2200906.48	HERRING BONE DRAINAGE AREA
HBDA_2	628187.67	2200697.72	HERRING BONE DRAINAGE AREA
HBDA_3	628143.68	2200521.02	HERRING BONE DRAINAGE AREA
HBDA_4	628379.92	2200346.82	HERRING BONE DRAINAGE AREA
HBDA_5	628358.73	2200326.14	HERRING BONE DRAINAGE AREA
HBDA_6	628376.18	2200310.33	HERRING BONE DRAINAGE AREA
HBDA_7	628397.45	2200332.76	HERRING BONE DRAINAGE AREA
HBDA_8	628738.06	2200087.04	HERRING BONE DRAINAGE AREA
HBDA_9	628754.02	2200037.31	HERRING BONE DRAINAGE AREA
HBDA_10	628828.34	2200023.94	HERRING BONE DRAINAGE AREA
HBDA_11	629016.42	2199866.86	HERRING BONE DRAINAGE AREA
HBDA_12	629205.90	2199759.46	HERRING BONE DRAINAGE AREA
HBDA_13	629461.06	2199552.70	HERRING BONE DRAINAGE AREA
HBDA_14	629614.23	2199568.31	HERRING BONE DRAINAGE AREA
HBDA_15	629766.97	2199925.38	HERRING BONE DRAINAGE AREA
HBDA_16	629657.68	2200128.87	HERRING BONE DRAINAGE AREA
HBDA_17	629548.39	2200332.37	HERRING BONE DRAINAGE AREA
HBDA_18	629391.78	2200460.92	HERRING BONE DRAINAGE AREA
HBDA_19	629275.23	2200467.67	HERRING BONE DRAINAGE AREA
HBDA_20	629157.33	2200427.19	HERRING BONE DRAINAGE AREA
HBDA_21	629086.68	2200498.25	HERRING BONE DRAINAGE AREA
HBDA_22	628623.29	2200720.16	HERRING BONE DRAINAGE AREA

COORDINATES:

HORIZONTAL: NAD83 SOUTH DAKOTA
STATE PLANE, SOUTH (4002),
U.S. SURVEY FEET

VERTICAL: LOCAL PROJECT DATUM

STOCKPILE AREA

NAME	NORTHING	EASTING	DESCRIPTION
STOCK_PILE1	628728.379	2201913.029	EXISTING STOCKPILE AREA
STOCK_PILE2	628674.42	2201856.715	EXISTING STOCKPILE AREA
STOCK_PILE3	628640.557	2201785.125	EXISTING STOCKPILE AREA
STOCK_PILE4	628685.599	2201708.94	EXISTING STOCKPILE AREA
STOCK_PILE5	628730.096	2201657.325	EXISTING STOCKPILE AREA
STOCK_PILE6	628771.192	2201633.197	EXISTING STOCKPILE AREA
STOCK_PILE7	628836.983	2201728.61	EXISTING STOCKPILE AREA
STOCK_PILE8	628886.893	2201769.376	EXISTING STOCKPILE AREA
STOCK_PILE9	628831.923	2201835.919	EXISTING STOCKPILE AREA

CONTRACTOR WORK AREA

NAME	NORTHING	EASTING	DESCIRPTION
WA_1	629882.428	2199548.932	CONTRACTOR WORK AREA
WA_2	629884.565	2199325.063	CONTRACTOR WORK AREA
WA_3	629381.773	2199320.264	CONTRACTOR WORK AREA
WA_4	629380.318	2199472.758	CONTRACTOR WORK AREA
WA_5	629096.565	2199513.997	CONTRACTOR WORK AREA
WA_6	628909.055	2199628.454	CONTRACTOR WORK AREA
WA_7	628972.390	2199851.651	CONTRACTOR WORK AREA

NOTES:

1. THE CONTRACTOR WILL ACCESS WORK AREAS AS INDICATED, UNLESS OTHERWISE APPROVED BY THE CONTRACTING OFFICER'S REPRESENTATIVE (COR). PERMANENT GATES WILL BE CONSTRUCTED AND LOCATED AS SHOWN ON THE DRAWINGS. GATES WILL BE LOCKED/SECURED AT THE END OF EACH WORK DAY. ALL WORK AREAS ARE ON GOVERNMENT PROPERTY. ACQUISITION OF RIGHTS-OF-ENTRY TO ENTER THE PROPERTY ARE NOT REQUIRED. RE-ESTABLISH TEMPORARY HAUL ROADS TO PRECONSTRUCTION CONDITIONS UPON COMPLETION OF THE WORK AS INDICATED IN SPECIFICATION SECTION 01 12 00 GENERAL. HAUL ROAD LOCATIONS TO AND FROM STOCKPILES AND STAGING AREAS MUST BE APPROVED BY THE COR PRIOR TO THE BEGINNING OF WORK. PRE-CONSTRUCTION AND POST-CONSTRUCTION HAUL ROUTE CENTERLINE PROFILE GROUND SURVEYS AND HAUL ROUTE PHOTOGRAPHS MUST BE TAKEN.

2. UTILIZE ONLY THE STAGING AREAS SHOWN ON THIS SHEET. ANY ADDITIONAL AREAS UTILIZED BY THE CONTRACTOR MUST BE APPROVED BY THE COR PRIOR TO USE.

US ARMY CORPS OF ENGINEERS
OMAHA DISTRICT

MARK	DESCRIPTION	DATE	APPR.	MARK	DESCRIPTION	DATE	APPR.

U. S. ARMY ENGINEER DISTRICT
CORPS OF ENGINEERS
OMAHA, NEBRASKA

DESIGNED BY: KPB/CLR
DWN BY: CLR/BAL
CKD BY: CLR/CBAL
SUBMITTED BY: ALB
FILE NAME:
SIZE: 33.1X22
PLOT SCALE: ou1o_scale
DATE: NOVEMBER 2022
SOLICITATION NO.: W912P8-23-B-0025
CONTRACT NO.: W912P8-23-C-XXXX
FILE NUMBER:
PLOT DATE: ou1o_sylme

BIG BEND DAM - LAKE SHARPE
FORT THOMPSON, SOUTH DAKOTA
REPLACEMENT OF LEFT ABUTMENT
COLLECTOR PIPE SYSTEM

GENERAL PLAN, SITE ACCESS, AND CONTROL DATA

SHEET IDENTIFICATION NUMBER
G-101

ou1o_username ou1o_design

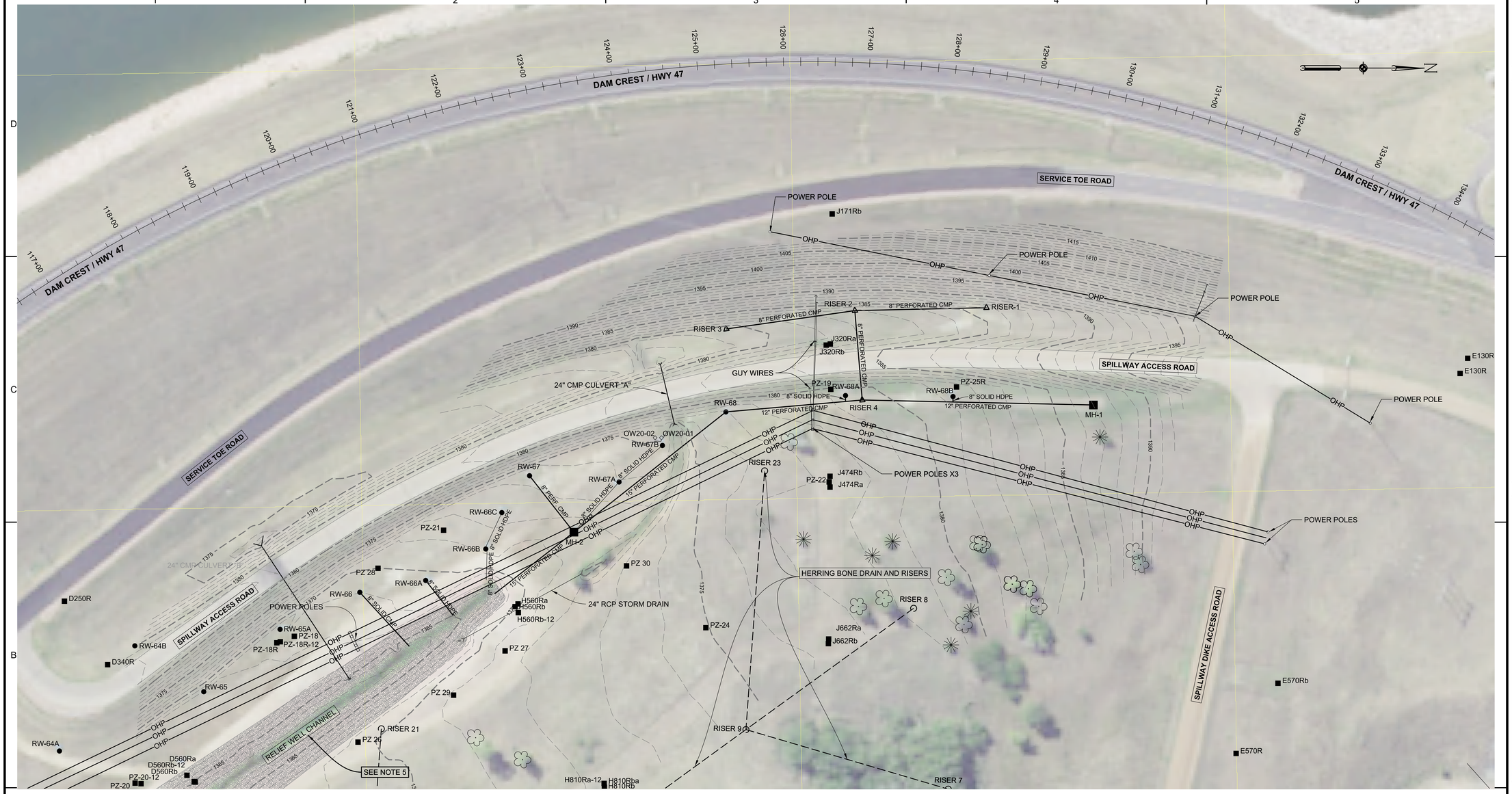

EXISTING CONDITIONS

SCALE: 1"=60'-0"

60' 0 60'

NOTES:

1. OVERHEAD POWERLINES AND POWER POLES ARE LOCATED NEAR THE PROPOSED EXCAVATION AREAS AND SHALL BE PROTECTED. CONTRACTOR IS RESPONSIBLE FOR UTILITY LOCATION CLEARING PRIOR TO EXCAVATING. REFER TO SPECIFICATIONS FOR ADDITIONAL REQUIREMENTS. ANY DAMAGES INCURRED DURING EXCAVATION OR CONSTRUCTION TO UTILITIES WILL BE REPAIRED BY THE CONTRACTOR AT NO COST TO THE GOVERNMENT.

2. CONTRACTOR WILL PROTECT ALL MANHOLES, CASINGS, OUTFALLS, RELIEF WELLS, PIEZOMERS, RISERS AND SUBDRAINS NOT PART OF THIS CONTRACT. ANY DAMAGES TO THESE FEATURES WILL BE REPAIRED OR REPLACED AT THE CONTRACTOR'S EXPENSE. THIS INCLUDES FEATURES SHOWN IN WORK AREAS AND NON-WORK AREAS.

3. THE EXISTING 8", 12" AND 15" PERFORATED CMP, RISERS 1, 2, 3, AND 4 ALONG WITH RELIEF WELL OUTFALLS HAVE ASBESTOS TREATED BITUMINOUS COATED PIPE. SEE SPECIFICATION 02 82 00, TITLED ASBESTOS-CONTAINING MATERIAL FOR DISPOSAL REQUIREMENTS.

4. NO DISTURBANCE WILL BE ALLOWED OVER THE HERRING BONE DRAINAGE AREA AS INDICATED ON THE DRAWINGS AND IN SPECIFICATION 01 12 00 CONSTRUCTION GENERAL PARAGRAPH 1.4.2.

5. CONTRACTOR MAY ENCOUNTER STABILIZATION RIPRAP FROM PREVIOUS CONTRACT IN BOTTOM AND WEST SLOPE OF RELIEF WELL CHANNEL BENEATH THE GRAVEL-FILLED GEOSYNTHETIC MAT. SEE SHEET FIO-12 FOR ADDITIONAL INFORMATION.

SURVEY NOTES:

S1. GRID COORDINATES ARE REFLECTED IN US SURVEY FEET AND REFER TO THE NORTH AMERICAN DATUM OF 1983 (NAD 83) STATE PLANE COORDINATE SYSTEM FOR: SOUTH DAKOTA SOUTH 4002. THEY ARE BASED ON CONTROL POINT PD-1 AND PD-4.

S2. ELEVATIONS ARE REFLECTED IN US SURVEY FEET AND REFER TO LOCAL PROJECT DATUM. CONTROL POINT INFORMATION IS SHOWN ON SHEET G-101.

S3. TOPOGRAPHY IS DERIVED FROM GPS/RTK AND TOTAL STATION SURVEY METHODS. FIELD SURVEY DATE: MAY 2020.

S4. CONTOUR INTERVAL IS 1 US SURVEY FOOT.

S5. COMBINED GRID FACTOR IS: 0.999874125.

S6. ALL UTILITIES WERE LOCATED BY 811 CONTRACT.

LEGEND

- LEFT ABUTMENT COLLECTOR SYSTEM DRAIN / OUTFALL
- LEFT ABUTMENT COLLECTOR SYSTEM RISER
- PIEZOMETER
- RELIEF WELL
- OBSERVATION WELL
- HERRING BONE RISER
- HERRING BONE DRAIN
- OHP — OVERHEAD POWER LINES
- MAJOR CONTOUR
- MINOR CONTOUR
- GRAVEL
- GUY WIRES / ANCHORS
- CULVERT
- TREE / VEGETATION
- MANHOLE
- POWER POLE

US ARMY CORPS OF ENGINEERS
OMAHA DISTRICT

MARK	DESCRIPTION	DATE	APPR.

MARK	DESCRIPTION	DATE	APPR.

DESIGNED BY: KPB/CLR | DWN BY: CLR/JEL | CKD BY: PJC/JEL | SUBMITTED BY: ALB | FILE NAME: BB90C10.10.DGN | SIZE: 33.1W x 22 | PLOT SCALE: | PLOT DATE: | DATE: NOVEMBER 2022 | SOLICITATION NO.: W912BF-20-B-0025 | CONTRACT NO.: W912BF-23-C-XXX | FILE NUMBER:

U. S. ARMY ENGINEER DISTRICT
CORPS OF ENGINEERS
OMAHA, NEBRASKA

BIG BEND DAM - LAKE SHARPE
FORT THOMPSON, SOUTH DAKOTA
REPLACEMENT OF LEFT ABUTMENT COLLECTOR PIPE SYSTEM

EXISTING CONDITIONS

SHEET IDENTIFICATION NUMBER
C-101

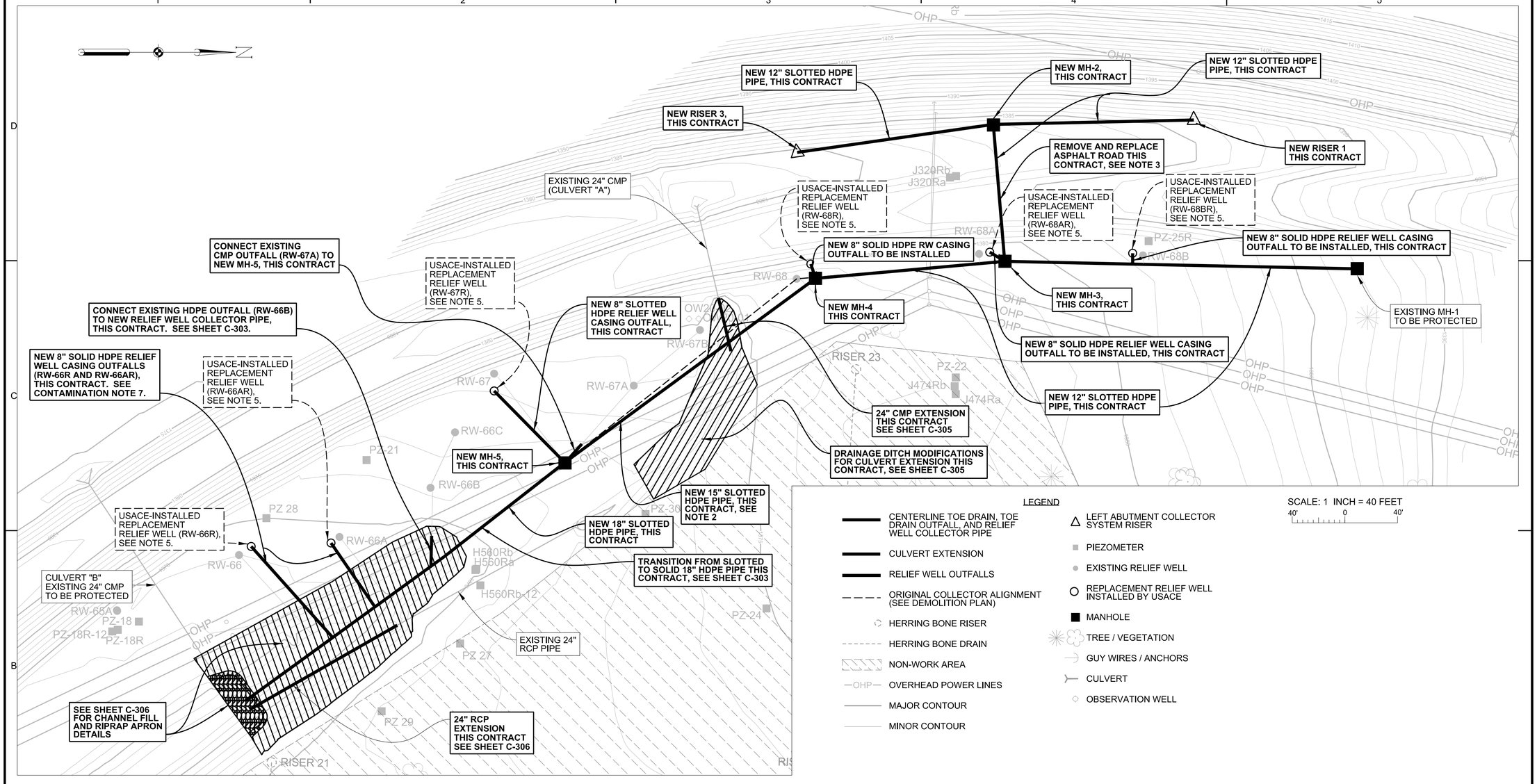

LEGEND

- CENTERLINE TOE DRAIN, TOE DRAIN OUTFALL, AND RELIEF WELL COLLECTOR PIPE
- CULVERT EXTENSION
- RELIEF WELL OUTFALLS
- ORIGINAL COLLECTOR ALIGNMENT (SEE DEMOLITION PLAN)
- HERRING BONE RISER
- HERRING BONE DRAIN
- NON-WORK AREA
- OVERHEAD POWER LINES
- MAJOR CONTOUR
- MINOR CONTOUR
- LEFT ABUTMENT COLLECTOR SYSTEM RISER
- PIEZOMETER
- EXISTING RELIEF WELL
- REPLACEMENT RELIEF WELL INSTALLED BY USACE
- MANHOLE
- TREE / VEGETATION
- GUY WIRES / ANCHORS
- CULVERT
- OBSERVATION WELL

SCALE: 1 INCH = 40 FEET

40' 0 40'

LEFT ABUTMENT COLLECTOR PIPE SYSTEM REPLACEMENT - WORK PLAN

NOTES:

1. WORK SHALL NOT PROCEED UNTIL DEWATERING NTP HAS BEEN ISSUED AND PIEZOMETERS INSTALLED (MINIMUM OF 7) FOR MONITORING GROUND WATER CONDITIONS. SEE SPECIFICATION 33 26 00 FOR DEWATERING REQUIREMENTS.

2. THE HORIZONTAL ALIGNMENT FOR THE NEW RELIEF WELL COLLECTOR PIPE BETWEEN MANHOLES MH-4 AND MH-5 DOES NOT FOLLOW THE EXISTING COLLECTOR ALIGNMENT AS SHOWN ON THE PLAN.

3. REPLACEMENT OF THE TOE DRAIN OUTFALL BETWEEN EXISTING RISER 2 AND RISER 4 WILL REQUIRE PARTIAL REMOVAL OF THE ASPHALT SPILLWAY ACCESS ROAD. THE CONTRACTOR IS RESPONSIBLE FOR PROPER SIGNAGE FOR ROAD CLOSURE AND REPAIR OF ASPHALT AFTER INSTALLATION AND BACKFILL FOR THE NEW TOE DRAIN OUTFALL IS COMPLETE. THE LIMITS OF ASPHALT REMOVAL WILL BE LIMITED TO THE EXTENT REQUIRED TO REMOVE AND REPLACE THE DRAIN AS APPROVED BY THE CONTRACTING OFFICER.

4. CONTRACTOR WILL PROTECT ALL EXISTING MANHOLES, RELIEF WELLS, PIEZOMETERS, RISERS, CASINGS, AND CASING OUTFALLS NOT SCHEDULED FOR ABANDONMENT/REPLACMENT AND ENSURE ANY DAMAGE IS EITHER REPAIRED OR REPLACED AT NO COST TO THE GOVERNMENT.

5. LOCATION OF REPLACEMENT RELIEF WELLS TO BE INSTALLED BY USACE PRIOR TO CONTRACT AWARD ARE APPROXIMATE. FINAL LOCATIONS MAY VARY FROM WHAT IS SHOWN ON DRAWINGS AND WILL BE PROVIDED TO THE CONTRACTOR. CASING OUTFALLS FOR THE REPLACEMENT RELIEF WELLS WILL BE INSTALLED THIS CONTRACT.

6. CONTRACTOR TO SUBMIT AS-BUILT DRAWINGS AND ASSOCIATED CADD FILES DEPICTING ACTUAL AS-BUILT CONDITIONS OF THE COMPLETED CONSTRUCTION AS INDICATED IN SPECIFICATION SECTION 01 78 39.00 24. SURVEY THE HORIZONTAL LOCATION OF ALL FEATURES COMPLETED AS PART OF THIS CONTRACT INCLUDING BUT NOT LIMITED TO THE RELIEF WELLS, MANHOLES, TOE DRAIN, TOE DRAIN OUTFALL, RELIEF WELL COLLECTOR PIPE, STORM DRAINS AND CULVERTS, AND PIEZOMETERS. PROVIDE SURVEY IN COORDINATES UTILIZING THE NORTH AMERICAN DATUM OF 1983 (NAD83) STATE PLANE COORDINATE SYSTEM FOR SOUTH DAKOTA SOUTH 4002, U.S. SURVEY FEET UNITS. THE VERTICAL LOCATION OF ALL FEATURES COMPLETED AS PART OF THIS CONTRACT MUST INCLUDE ELEVATIONS FOR GROUND SURFACE AND PIPE INVERTS. PROVIDE THE AS-BUILT SURVEY DATA IN LOCAL PROJET DATUM, U.S. SURVEY FEET UNITS.

7. CONTAMINATED SOILS WERE ENCOUNTERED IN BORING BH20-12 (NEAR RW-66A), TOTAL PETROLEUM HYDROCARBONS (TPH)-DIESEL RANGE ORGANICS (DRO) IN BOTH GROUNDWATER AND SOIL SAMPLE, AND BORING BH20-11 (NEAR RW-67), ENCOUNTERED TPH-DRO IN THE SOIL WITH CONCENTRATIONS GREATER THAN 10 MG/KG, SEE GEOTECHNICAL DATA REPORT FOR MORE INFORMATION. SEE SHEET FIO-7 FOR BORING LOCATIONS. NOTE THE FULL EXTENT OF THE CONTAMINATED AREA IS UNKOWN. CONTRACTOR MUST PERFORM A GEOTECHNICAL FIELD INVESTIGATION ACCORDING TO SPECIFICATION 02 32 13 SUBFURFACE DRILLING AND SAMPLING. EXCAVATED CONTAMINATED SOIL AND WATER MUST BE HANDLED ACCORDING TO SPECIFICATION 02 61 13 EXCAVATION AND HANDLING OF CONTAMINATED MATERIALS.

8. FOR TRENCH EXCAVATION LIMITATIONS AND SEQUENCING SEE SPECIFICATION 31 23 00.00 20.

9. THE EXISTING CONDITIONS SURVEY INFORMATION FOR THIS CONTRACT IS SHOWN ON SHEET C-101.

TABLE 1 - MANHOLE LOCATIONS AND ELEVATIONS (FEET LPD)

MANHOLE/ RISER ID	NORTHING	EASTING	TOP OF MANHOLE/ RISER	TOP OF BASE SLAB	INVERT: RISER	INVERT: MANHOLE INLET	INVERT: MANHOLE OUTLET	INVERT: RELIEF WELL OUTFALL AT MANHOLE
MH-1	629,856.89	2,199,497.36	1,388.00	1,373.50	NA	NA	1,374.00	NA
MH-2	629,580.68	2,199,388.09	1,383.00	1,371.75	NA	1,372.00	1,372.00	NA
MH-3	629,589.27	2,199,491.64	1,380.00	1,370.00	NA	1,371.25	1,370.25	1371.25 (RW-68AR)
MH-4	269,445.47	2,199,504.61	1,378.00	1,366.25	NA	1,367.50	1,366.50	1367.50 (RW-68R)
MH-5	629,255.23	2,199,644.71	1,372.00	1,364.75	NA	1,366.00	1,365.00	1368.00 (RW-67A)*
								1365.00 (RW-67R)
RISER 1	629,732.86	2,199,384.30	1,387.00	NA	1,375.00	NA	NA	NA
RISER 3	629,431.52	2,199,408.93	1,379.80	NA	1,376.00	NA	NA	NA

* OUTFALL MAY REQUIRE FIELD FITTING TO MANHOLE

US ARMY CORPS OF ENGINEERS
OMAHA DISTRICT

MARK	DESCRIPTION	DATE	APPR.	MARK	DESCRIPTION	DATE	APPR.

U. S. ARMY ENGINEER DISTRICT
CORPS OF ENGINEERS
OMAHA, NEBRASKA

DESIGNED BY: KPB/CLR | DWN BY: CLR/BAL | CKD BY: KAC/BAL | SUBMITTED BY: ALB | FILE NAME: BB90C201.DGN | SIZE: 33.1X22 | PLOT SCALE: | PLOT DATE: | DATE: NOVEMBER 2022 | SOLICITATION NO.: W912BF-23-B-0003 | CONTRACT NO.: W912BF-23-C-XXXX | FILE NUMBER:

BIG BEND DAM - LAKE SHARPE
FORT THOMPSON, SOUTH DAKOTA
REPLACEMENT OF LEFT ABUTMENT
COLLECTOR PIPE SYSTEM
WORK PLAN

SHEET IDENTIFICATION NUMBER
C-201

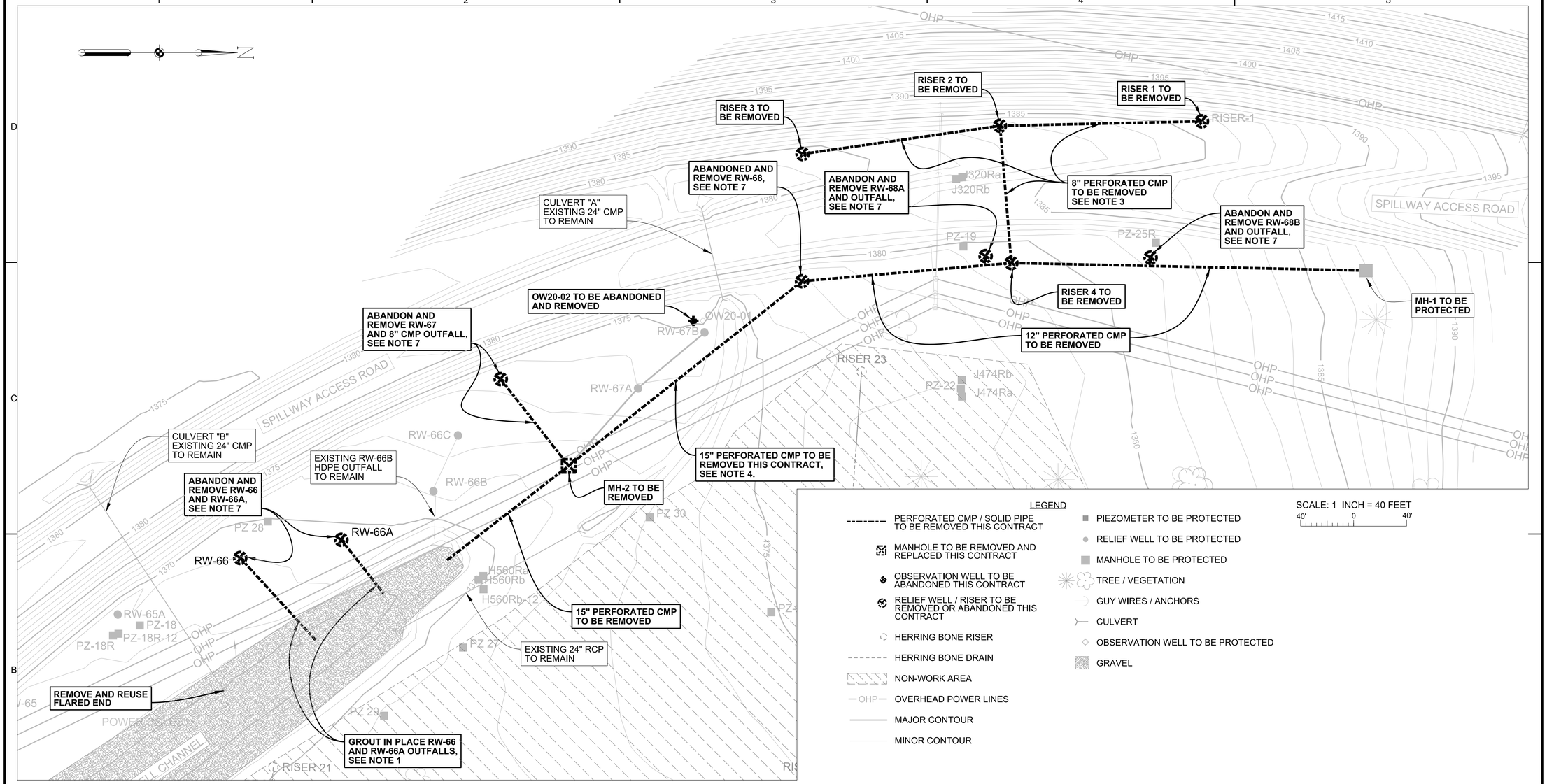

DEMOLITION PLAN

LEGEND

- PERFORATED CMP / SOLID PIPE TO BE REMOVED THIS CONTRACT
- MANHOLE TO BE REMOVED AND REPLACED THIS CONTRACT
- OBSERVATION WELL TO BE ABANDONED THIS CONTRACT
- RELIEF WELL / RISER TO BE REMOVED OR ABANDONED THIS CONTRACT
- HERRING BONE RISER
- HERRING BONE DRAIN
- NON-WORK AREA
- OHP — OVERHEAD POWER LINES
- MAJOR CONTOUR
- MINOR CONTOUR
- PIEZOMETER TO BE PROTECTED
- RELIEF WELL TO BE PROTECTED
- MANHOLE TO BE PROTECTED
- TREE / VEGETATION
- GUY WIRES / ANCHORS
- CULVERT
- OBSERVATION WELL TO BE PROTECTED
- GRAVEL

SCALE: 1 INCH = 40 FEET
40' 0 40'

NOTES:

1. THE CASING OUTFALL FOR RELIEF WELLS RW-66 AND RW-66A WILL BE LEFT IN PLACE WITH THE OUTFALL CAPPED AND FILLED WITH FLOWABLE FILL TO MINIMIZE EXCAVATION OF POTENTIAL CONTAMINATED SOILS IN THIS AREA.

2. CONTRACTOR WILL PROTECT ALL MANHOLES, CASINGS, CASING OUTFALLS, RELIEF WELLS, PIEZOMERS, RISERS AND SUB DRAINS NOT PART OF THIS CONTRACT. ANY DAMAGES TO THESE FEATURES WILL BE REPAIRED OR REPLACED AT THE CONTRACTOR'S EXPENSE.

3. REPLACEMENT OF THE TOE DRAIN OUTFALL BETWEEN EXISTING RISER 2 AND RISER 4 WILL REQUIRE PARTIAL REMOVAL OF THE ASPHALT SPILLWAY ACCESS ROAD. THE CONTRACTOR IS RESPONSIBLE FOR PROPER SIGNAGE FOR ROAD CLOSURE AND REPAIR OF ASPHALT AFTER INSTALLATION AND BACKFILL FOR THE NEW TOE DRAIN OUTFALL IS COMPLETE. THE LIMITS OF ASPHALT REMOVAL WILL BE LIMITED TO THE EXTENT REQUIRED TO REMOVE AND REPLACE THE DRAIN AS APPROVED BY THE CONTRACTING OFFICER.

4. THE NEW HORIZONTAL DRAIN ALIGNMENT BETWEEN NEW MANHOLES MH-4 AND MH-5 (SHOWN ON SHEET C-201) DOES NOT FOLLOW THE EXISTING DRAIN ALIGNMENT SHOWN BETWEEN RW-68 AND MH-2.

5. THE EXISTING 8", 12" AND 15" PERFORATED CMP, RISERS 1, 2, 3, AND 4 ALONG WITH RELIEF WELL OUTFALLS HAVE ASBESTOS TREATED BITUMINOUS COATED PIPE. SEE SPECIFICATION 02 82 00, TITLED ASBESTOS-CONTAINING MATERIAL FOR DISPOSAL REQUIREMENTS.

6. NO DISTURBANCE WILL BE ALLOWED OVER THE HERRING BONE DRAINAGE AREA AS INDICATED ON THE DRAWINGS AND IN SPECIFICATION 01 12 00 CONSTRUCTION GENERAL PARAGRAPH 1.4.2.

7. WITH THE EXCEPTION OF EXISTING RELIEF WELL RW-68, ALL EXISTING WELLS, 36-INCH CASINGS AND THEIR OUTFALLS MUST NOT BE ABANDONED UNTIL THE REPLACEMENT RELIEF WELLS, NEW CASINGS AND THE NEW OUTFALLS ARE COMPLETED.

8. WORK SHALL NOT PROCEED UNTIL DEWATERING NTP HAS BEEN ISSUED AND PIEZOMETERS INSTALLED (MINIMUM OF 7) FOR MONITORING GROUND WATER CONDITIONS. SEE SPECIFICATION 33 26 00 REGARDING DEWATERING REQUIREMENTS.

9. CONTAMINATED SOILS WERE ENCOUNTERED IN BORING BH20-12 (NEAR RW-66A), TOTAL PETROLEUM HYDROCARBONS (TPH)-DIESEL RANGE ORGANICS (DRO) IN BOTH GROUNDWATER AND SOIL SAMPLE, AND BORING BH20-11 (NEAR RW-67), ENCOUNTERED TPH-DRO IN THE SOIL WITH CONCENTRATIONS GREATER THAN 10 MG/KG, SEE GEOTECHNICAL DATA REPORT FOR MORE INFORMATION. SEE SHEET FIO-7 FOR BORING LOCATIONS. NOTE THE FULL EXTENT OF THE CONTAMINATED AREA IS UNKOWN. CONTRACTOR MUST PERFORM A GEOTECHNICAL FIELD INVESTIGATION ACCORDING TO SPECIFICATION 02 32 13 SUBFURFACE DRILLING AND SAMPLING. EXCAVATED CONTAMINATED SOIL AND WATER MUST BE HANDLED ACCORDING TO SPECIFICATION 02 61 13 EXCAVATION AND HANDLING OF CONTAMINATED MATERIALS.

10. FOR TRENCH EXCAVATION LIMITATIONS AND SEQUENCING SEE SPECIFICATION 31 23 00.00 20.

US ARMY CORPS OF ENGINEERS
OMAHA DISTRICT

MARK	DESCRIPTION	DATE	APPR.	MARK	DESCRIPTION	DATE	APPR.

DESIGNED BY: KPB/CLR
DWN BY: CLR/BJL
CKD BY: RLJ/CBJL
SUBMITTED BY: ALB
FILE NAME: BB90C201.DGN
SIZE: 33 X 22
PLOT SCALE:
PLOT DATE:
DATE: NOVEMBER 2022
SOLICITATION NO.: W912BF-23-B-0003
CONTRACT NO.: W912BF-23-C-XXX
FILE NUMBER:

U. S. ARMY ENGINEER DISTRICT
CORPS OF ENGINEERS
OMAHA, NEBRASKA

BIG BEND DAM - LAKE SHARPE
FORT THOMPSON, SOUTH DAKOTA
REPLACEMENT OF LEFT ABUTMENT
COLLECTOR PIPE SYSTEM
DEMOLITION PLAN

SHEET IDENTIFICATION NUMBER
C-300

NOTES:

1. ELEVATION AND THICKNESS OF EMBANKMENT CORE DRAIN VARIES AND SHALL BE FIELD VERIFIED BY THE CONTRACTOR TO ENSURE FILTER SAND IS IN CONTINUOUS CONTACT AND MATCHES THE FULL THICKNESS OF THE CORE DRAIN MATERIAL.

2. THE EXCAVATION AND SLOPES SHOWN ARE FOR VISUAL REFERENCE ONLY. SEE SHEET C-505 FOR EXCAVATION AND BACKFILLING DETAILS.

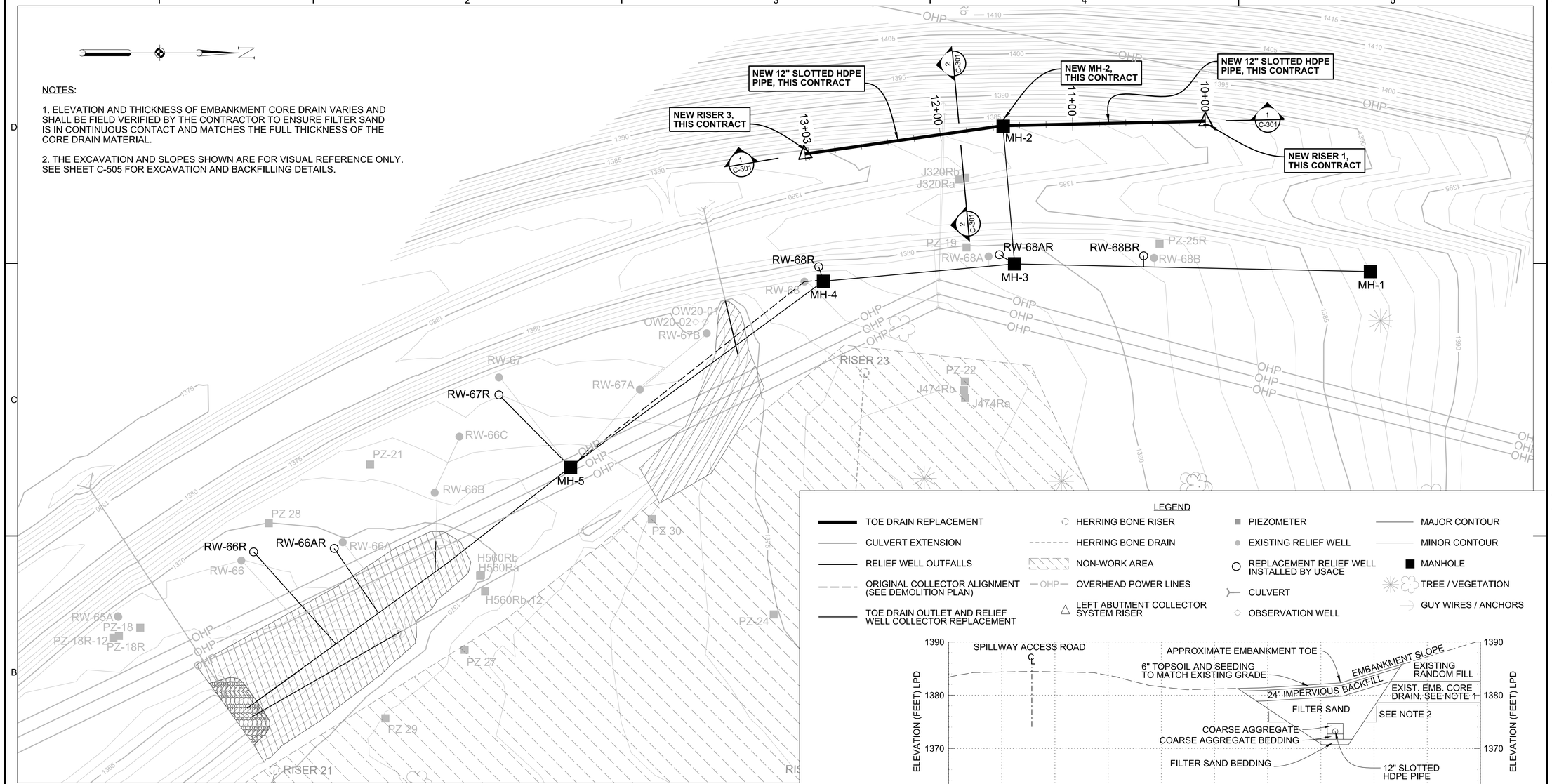

TOE DRAIN REPLACEMENT - PLAN

SCALE: 1 INCH = 40 FEET

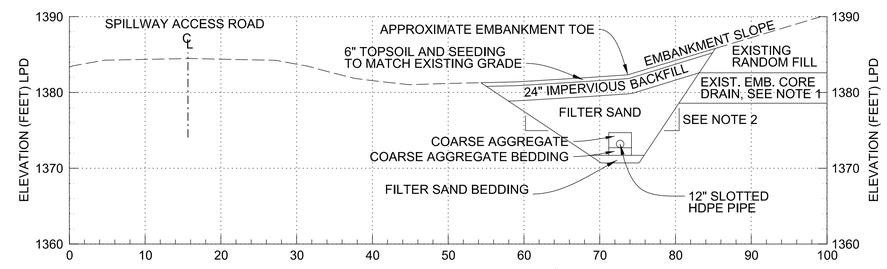

2 C-301 TOE DRAIN STATION 11+82 SECTION 2 C-301

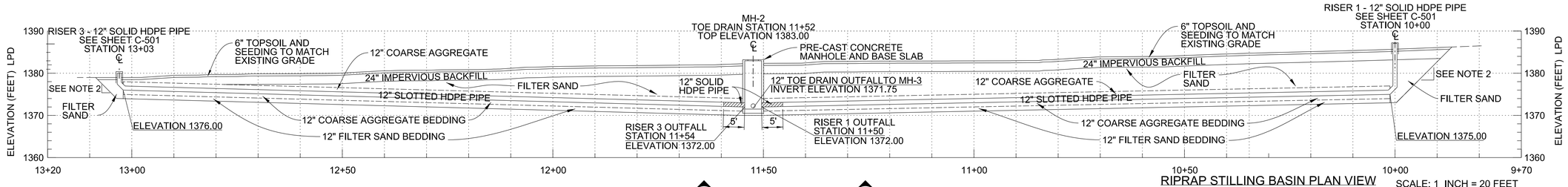

1 C-301 TOE DRAIN PROFILE 1 C-301

RIPRAP STILLING BASIN PLAN VIEW

SCALE: 1 INCH = 20 FEET

US ARMY CORPS OF ENGINEERS
OMAHA DISTRICT

MARK	DESCRIPTION	DATE	APPR.	MARK	DESCRIPTION	DATE	APPR.

DESIGNED BY: KPB/CLR
DWN BY: CLR/ALL
CKD BY: RJC/SAL
SUBMITTED BY: ALB
DATE: NOVEMBER 2022
SOLICITATION NO.: W912P8-23-B-0005
CONTRACT NO.: W912P8-23-C-XXXX
FILE NAME: BB90C201.DGN
FILE NUMBER:
PLOT SCALE:
PLOT DATE:
SIZE: 33.1X22

U. S. ARMY ENGINEER DISTRICT
CORPS OF ENGINEERS
OMAHA, NEBRASKA

BIG BEND DAM - LAKE SHARPE
FORT THOMPSON, SOUTH DAKOTA
REPLACEMENT OF LEFT ABUTMENT COLLECTOR PIPE SYSTEM

TOE DRAIN REPLACEMENT PLAN, PROFILE AND SECTION

SHEET IDENTIFICATION NUMBER
C-301

NOTES:

1. ELEVATION AND THICKNESS OF EMBANKMENT CORE DRAIN VARIES AND SHALL BE FIELD VERIFIED BY THE CONTRACTOR TO ENSURE FILTER SAND IS IN CONTINUOUS CONTACT AND MATCHES THE FULL THICKNESS OF THE CORE DRAIN MATERIAL.

2. THE EXCAVATION AND SLOPES SHOWN ARE FOR VISUAL REFERENCE ONLY. SEE SHEET C-505 FOR EXCAVATION AND BACKFILLING DETAILS.

3. REPLACEMENT OF THE TOE DRAIN OUTFALL BETWEEN EXISTING RISER 2 AND RISER 4 WILL REQUIRE PARTIAL REMOVAL OF THE ASPHALT SPILLWAY ACCESS ROAD. THE CONTRACTOR IS RESPONSIBLE FOR PROPER SIGNAGE FOR ROAD CLOSURE AND REPAIR OF ASPHALT AFTER INSTALLATION AND BACKFILL FOR THE NEW TOE DRAIN OUTFALL IS COMPLETE. THE LIMITS OF ASPHALT REMOVAL WILL BE LIMITED TO THE EXTENT REQUIRED TO REMOVE AND REPLACE THE DRAIN AS APPROVED BY THE CONTRACTING OFFICER.

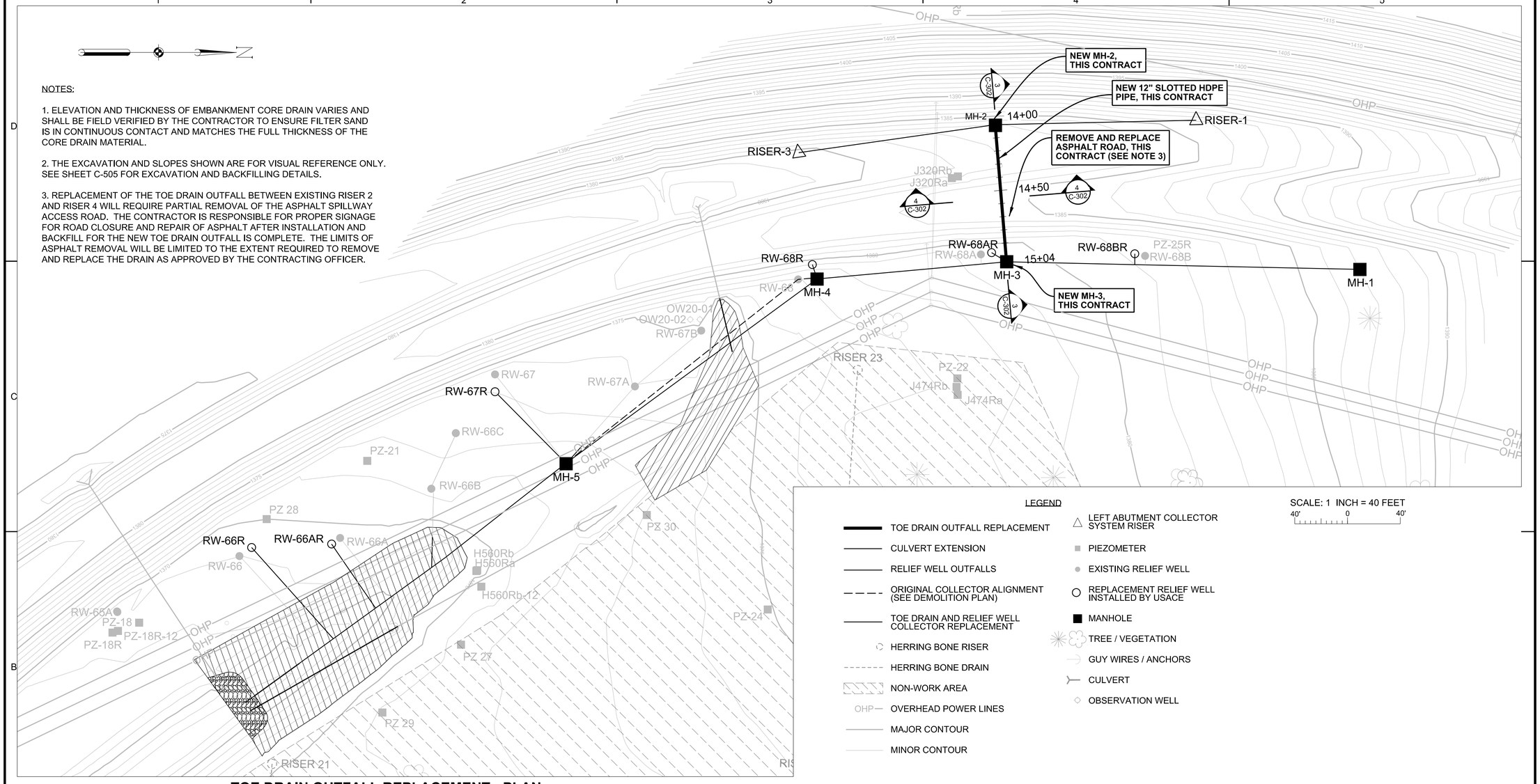

TOE DRAIN OUTFALL REPLACEMENT - PLAN

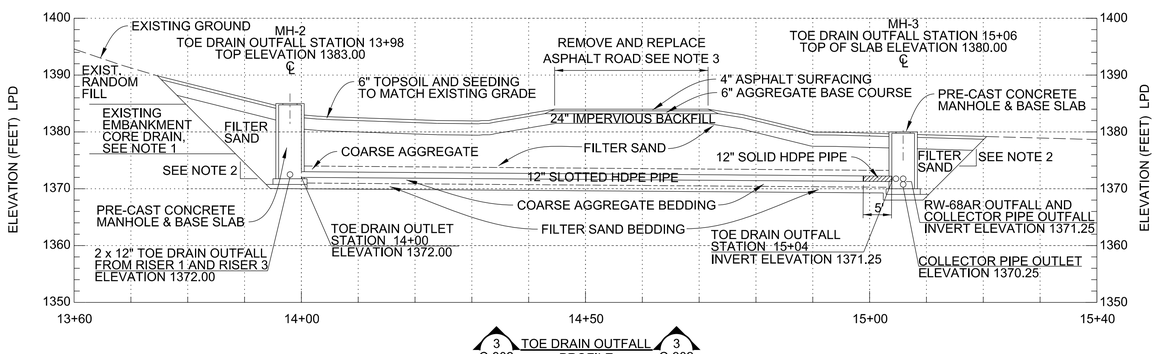

3 C-302 TOE DRAIN OUTFALL PROFILE 3 C-302

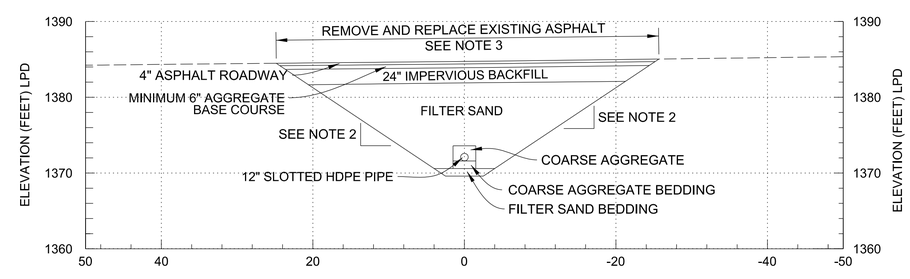

4 C-302 TOE DRAIN OUTFALL STATION 14+56 SECTION 4 C-302

US ARMY CORPS OF ENGINEERS
OMAHA DISTRICT

MARK	DESCRIPTION	DATE	APPR.	MARK	DESCRIPTION	DATE	APPR.

DESIGNED BY: KPB/CLR
DWN BY: CLR/BJL
CKD BY: CLR/BJL
SUBMITTED BY: ALB
DATE: NOVEMBER 2022
SOLICITATION NO.: W912P8-23-B-0005
CONTRACT NO.: W912P8-23-C-xxxx
FILE NAME: BB90C203.DGN
FILE NUMBER:
SIZE: 33 X 22
PLOT SCALE:
PLOT DATE:

U. S. ARMY ENGINEER DISTRICT
CORPS OF ENGINEERS
OMAHA, NEBRASKA

BIG BEND DAM - LAKE SHARPE
FORT THOMPSON, SOUTH DAKOTA
REPLACEMENT OF LEFT ABUTMENT COLLECTOR PIPE SYSTEM

TOE DRAIN OUTFALL REPLACEMENT PLAN, PROFILE AND SECTIONS

SHEET IDENTIFICATION NUMBER
C-302

NOTES:

1. LOCATION OF REPLACEMENT RELIEF WELLS TO BE INSTALLED BY USACE PRIOR TO CONTRACT AWARD ARE APPROXIMATE. FINAL LOCATIONS MAY VARY FROM WHAT IS SHOWN ON DRAWINGS AND WILL BE PROVIDED TO THE CONTRACTOR. CASING OUTFALLS FOR THE REPLACEMENT RELIEF WELLS WILL BE INSTALLED THIS CONTRACT.

2. THE EXCAVATION AND SLOPES SHOWN ARE FOR VISUAL REFERENCE ONLY. SEE SHEET C-505 FOR EXCAVATION AND BACKFILLING DETAILS.

3. THE HORIZONTAL ALIGNMENT BETWEEN MANHOLES MH-4 AND MH-5 DOES NOT FOLLOW THE EXISTING DRAIN ALIGNMENT AS SHOWN ON THE PLAN.

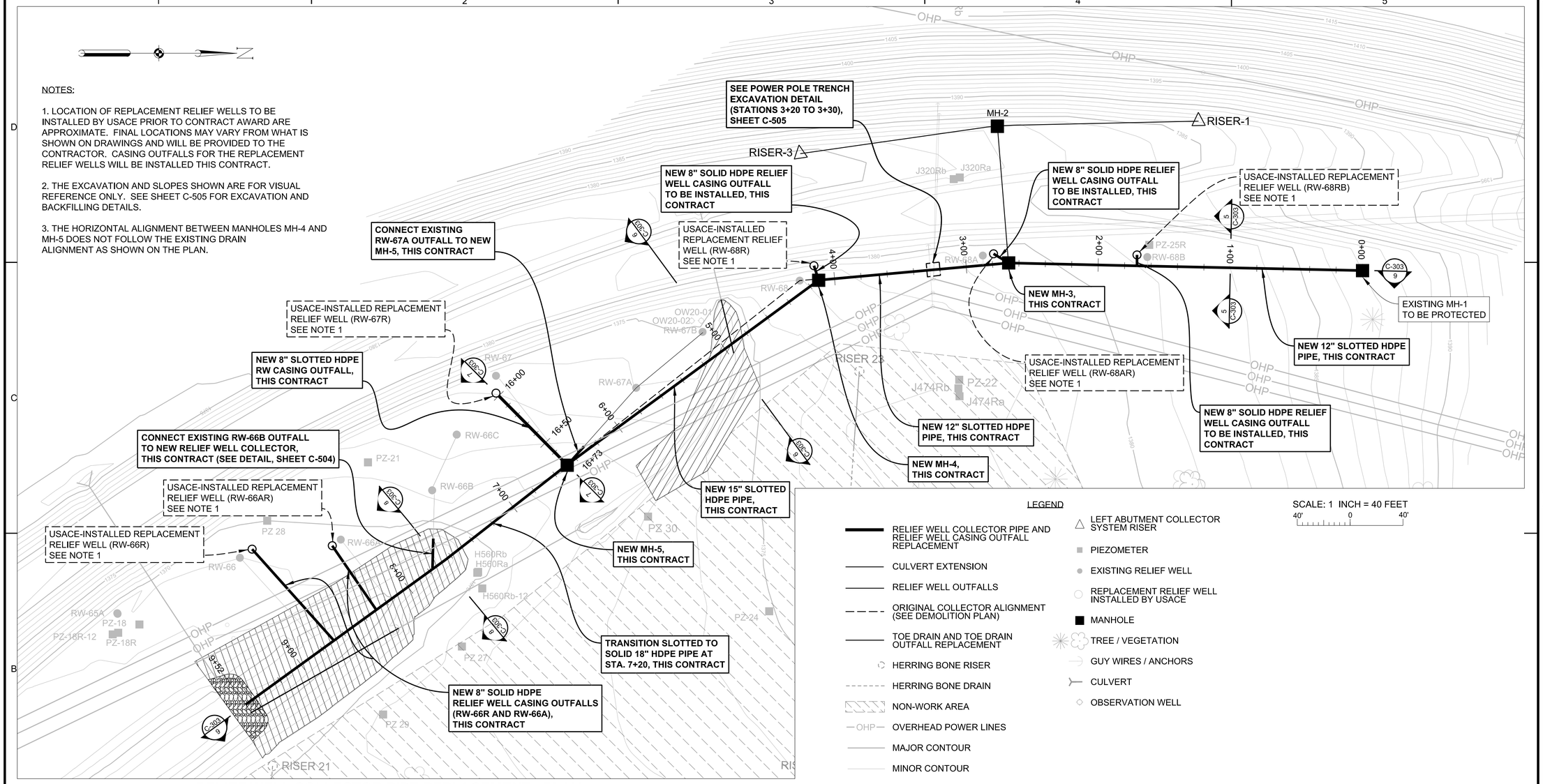

RELIEF WELL COLLECTOR PIPE REPLACEMENT - PLAN

LEGEND

- RELIEF WELL COLLECTOR PIPE AND RELIEF WELL CASING OUTFALL REPLACEMENT
- CULVERT EXTENSION
- RELIEF WELL OUTFALLS
- ORIGINAL COLLECTOR ALIGNMENT (SEE DEMOLITION PLAN)
- TOE DRAIN AND TOE DRAIN OUTFALL REPLACEMENT
- HERRING BONE RISER
- HERRING BONE DRAIN
- NON-WORK AREA
- OHP — OVERHEAD POWER LINES
- MAJOR CONTOUR
- MINOR CONTOUR
- LEFT ABUTMENT COLLECTOR SYSTEM RISER
- PIEZOMETER
- EXISTING RELIEF WELL
- REPLACEMENT RELIEF WELL INSTALLED BY USACE
- MANHOLE
- TREE / VEGETATION
- GUY WIRES / ANCHORS
- CULVERT
- OBSERVATION WELL

SCALE: 1 INCH = 40 FEET
40' 0 40'

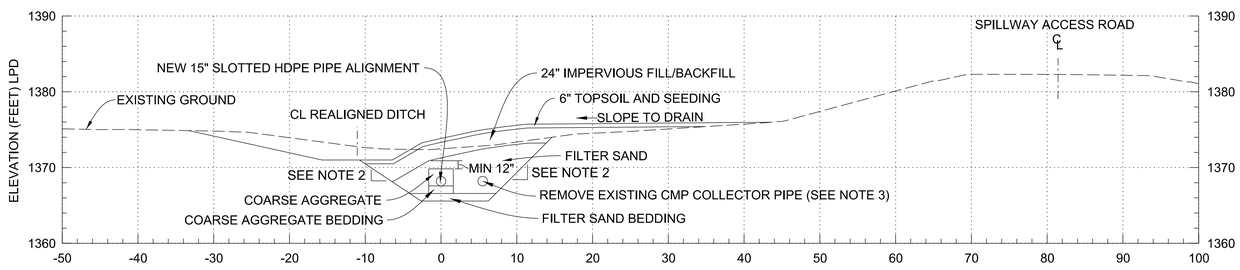

6 C-303 RELIEF WELL COLLECTOR STATION 5+20 6 C-303

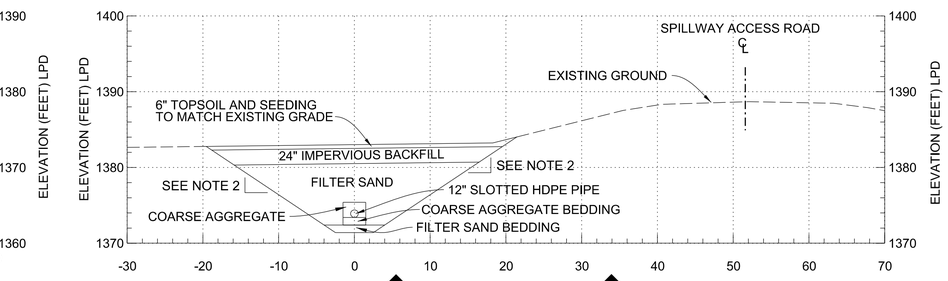

5 C-303 RELIEF WELL COLLECTOR STATION 1+00 5 C-303

US ARMY CORPS OF ENGINEERS
OMAHA DISTRICT

MARK	DESCRIPTION	DATE	APPR.	MARK	DESCRIPTION	DATE	APPR.

DESIGNED BY: KPB/CLR
DWN BY: CLR/JL
CKD BY: PZC/ESL
SUBMITTED BY: ALB
FILE NAME: BB90C201.DGN
SIZE: 33.1W22
PLOT SCALE:
DATE: NOVEMBER 2022
SOLICITATION NO.: W912EF-23-B-0025
CONTRACT NO.: W912EF23C-XXX
FILE NUMBER:
PLOT DATE:

U. S. ARMY ENGINEER DISTRICT
CORPS OF ENGINEERS
OMAHA, NEBRASKA

BIG BEND DAM - LAKE SHARPE
FORT THOMPSON, SOUTH DAKOTA
REPLACEMENT OF LEFT ABUTMENT COLLECTOR PIPE SYSTEM

RW COLLECTOR PIPE REPLACEMENT & NEW OUTFALLS - PLAN, PROFILE, SECTIONS
SHEET 1 OF 2

SHEET IDENTIFICATION NUMBER
C-303

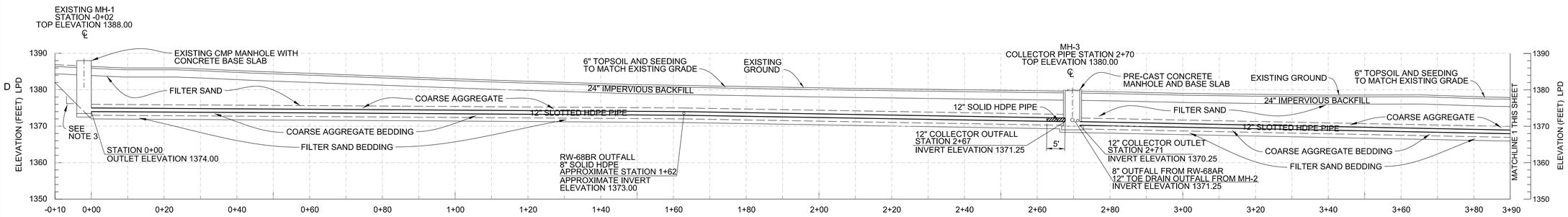

9 C-303 C-304 RELIEF WELL COLLECTOR PROFILE 9 C-303 C-304

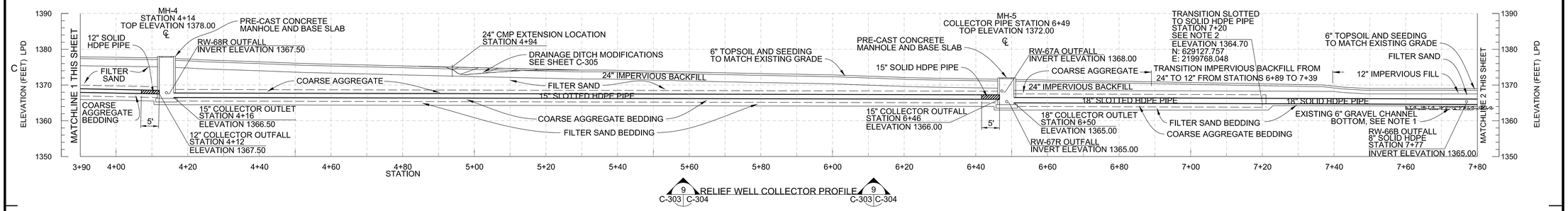

9 C-303 C-304 RELIEF WELL COLLECTOR PROFILE 9 C-303 C-304

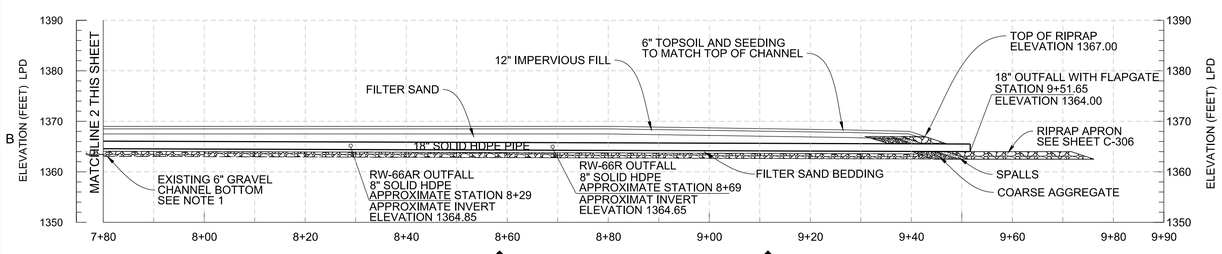

9 C-303 C-304 RELIEF WELL COLLECTOR PROFILE 9 C-303 C-304

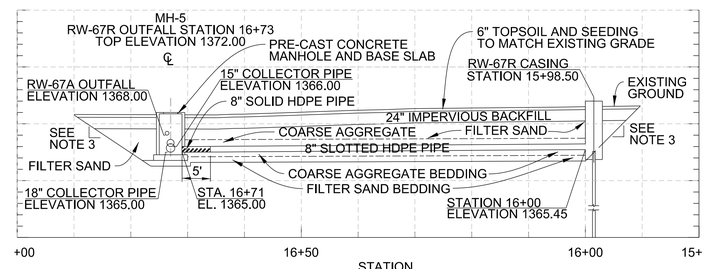

7 C-303 C-304 RW-67R OUTFALL PROFILE 7 C-303 C-304

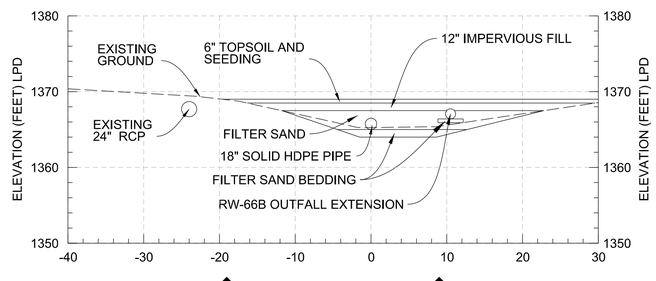

8 C-303 C-304 RELIEF WELL COLLECTOR STATION 7+70 8 C-303 C-304

NOTES:

1. CONTRACTOR MAY ENCOUNTER STABILIZATION RIPRAP FROM PREVIOUS CONTRACT IN BOTTOM AND WEST SLOPE OF RELIEF WELL CHANNEL BENEATH THE GRAVEL-FILLED GEOSYNTHETIC MAT. SEE SHEET FIO-12 FOR ADDITIONAL INFORMATION.

2. COARSE AGGREGATE BACKFILL SURROUNDING THE SLOTTED HDPE ON THIS DETAIL MUST EXTEND LATERALLY 1 F00T PAST THE SLOTTED PIPE TO SOLID HDPE TRANSITION BETWEEN STATIONS 7+20 TO 7+21.

3. THE EXCAVATION AND SLOPES SHOWN ARE FOR VISUAL REFERENCE ONLY. SEE SHEET C-505 FOR EXCAVATION AND BACKFILLING DETAILS.

US ARMY CORPS OF ENGINEERS
OMAHA DISTRICT

MARK	DESCRIPTION	DATE	APPR.

MARK	DESCRIPTION	DATE	APPR.

DESIGNED BY: KPB/CLR
DWN BY: CJB/AL
CKD BY: RJC/ZBL
SUBMITTED BY: ALB
FILE NAME: BB90C201.DGN
SIZE: 33.1X22
PLOT SCALE:
PLOT DATE:
DATE: NOVEMBER 2022
SOLICITATION NO.: W912BF-23-B-0015
CONTRACT NO.: W912BF-23-C-xxx
FILE NUMBER:

U. S. ARMY ENGINEER DISTRICT
CORPS OF ENGINEERS
OMAHA, NEBRASKA

BIG BEND DAM - LAKE SHARPE
FORT THOMPSON, SOUTH DAKOTA
REPLACEMENT OF LEFT ABUTMENT COLLECTOR PIPE SYSTEM
RW COLLECTOR PIPE REPLACEMENT & NEW OUTFALLS - PLAN, PROFILES, SECTIONS
SHEET 2 OF 2

SHEET IDENTIFICATION NUMBER
C-304

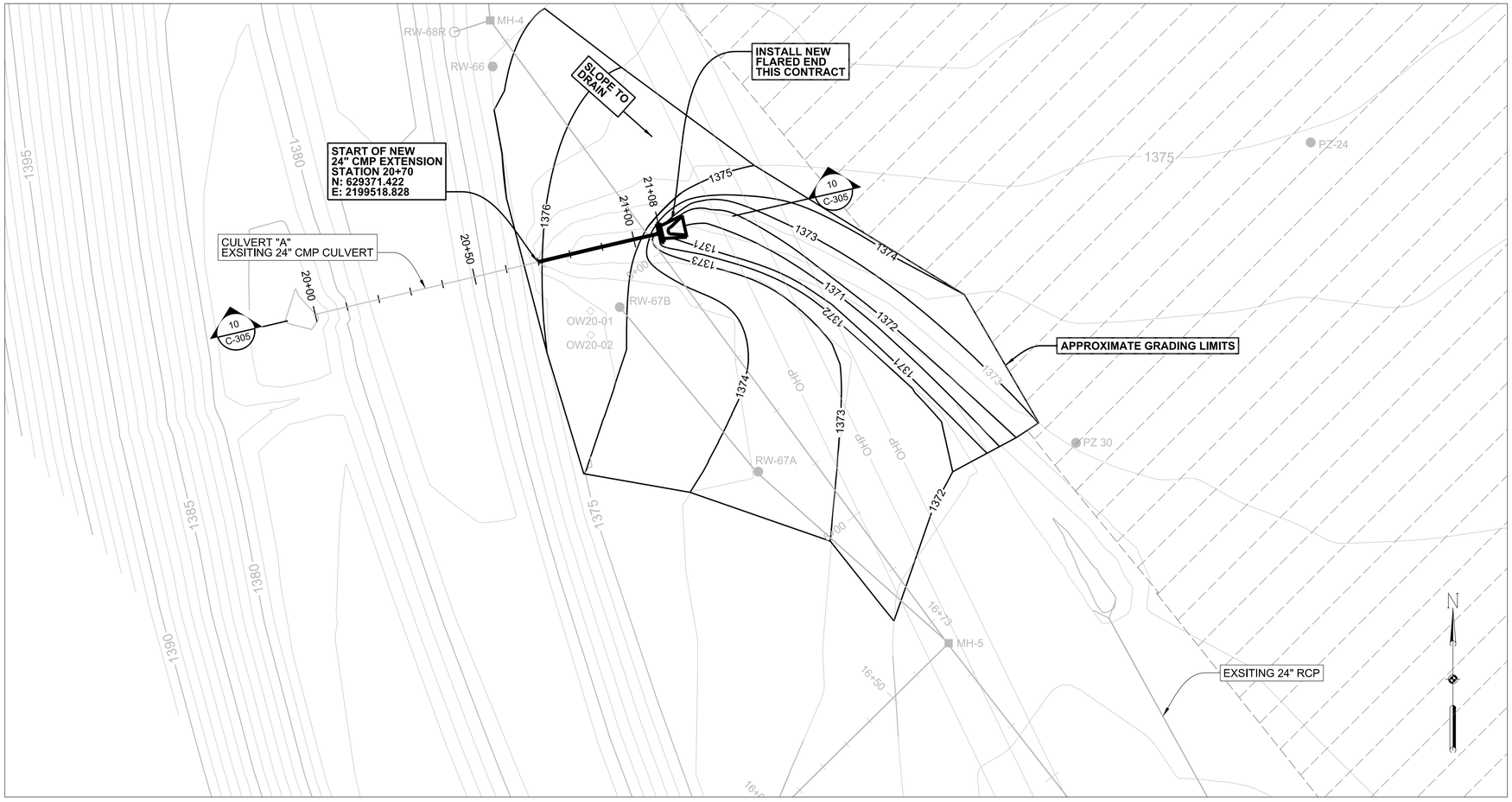

24" CMP EXTENSION (CULVERT "A") - PLAN

SCALE: 1 INCH = 20 FEET
20' 0 20'

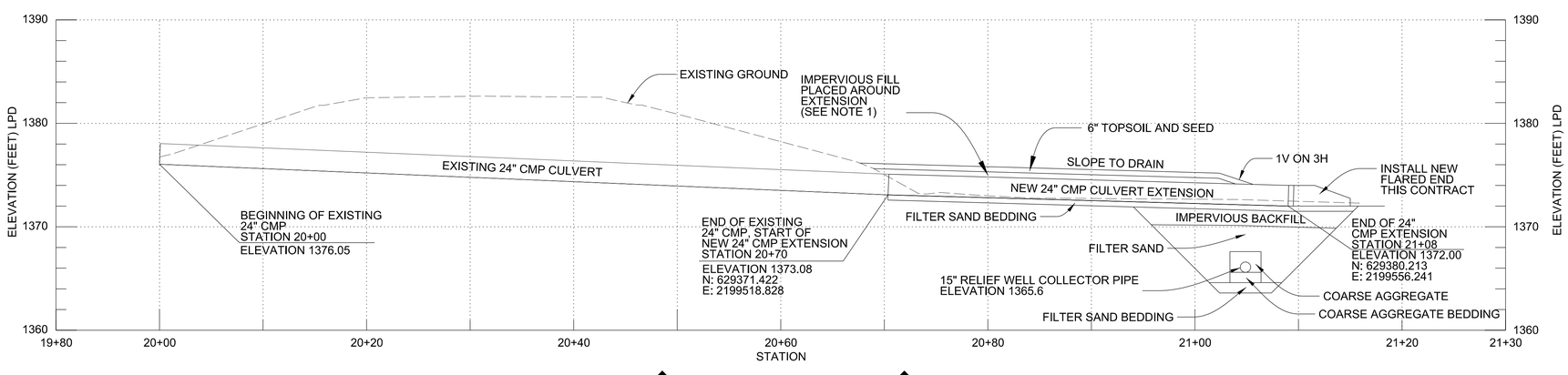

10 C-305 24" CMP EXTENSION - PROFILE CULVERT "A" 10 C-305

NOTES:

1. MINIMUM COVER OVER CMP CULVERT MUST NOT BE LESS THAN 12 INCHES.

LEGEND

- PIEZOMETER
- RELIEF WELL
- MANHOLE
- CULVERT EXTENSION
- RELIEF WELL COLLECTOR AND OUTFALLS
- CULVERT
- OBSERVATION WELL
- NON-WORK AREA
- OHP — OVERHEAD POWER LINES
- FINAL GRADE CONTOUR
- EXISTING CONTOUR
- REPLACEMENT RELIEF WELL INSTALLED BY USACE

US ARMY CORPS OF ENGINEERS
OMAHA DISTRICT

MARK	DESCRIPTION	DATE	APPR.	MARK	DESCRIPTION	DATE	APPR.

U. S. ARMY ENGINEER DISTRICT
CORPS OF ENGINEERS
OMAHA, NEBRASKA

DESIGNED BY: KPB/CLR
DWN BY: CLR/BLL
CKD BY: RLC/BLL
SUBMITTED BY: ALB
FILE NAME: BB90C304.DGN
SIZE: 33 X 22
PLOT SCALE:
DATE: NOVEMBER 2022
SOLICITATION NO.: W912BF-23-B-0005
CONTRACT NO.: W912BF-23-C-xxxx
FILE NUMBER:
PLOT DATE:

BIG BEND DAM - LAKE SHARPE
FORT THOMPSON, SOUTH DAKOTA
REPLACEMENT OF LEFT ABUTMENT
COLLECTOR PIPE SYSTEM

24" CMP EXTENSION (CULVERT "A")
PLAN (GRADING) AND PROFILE

SHEET IDENTIFICATION NUMBER
C-305

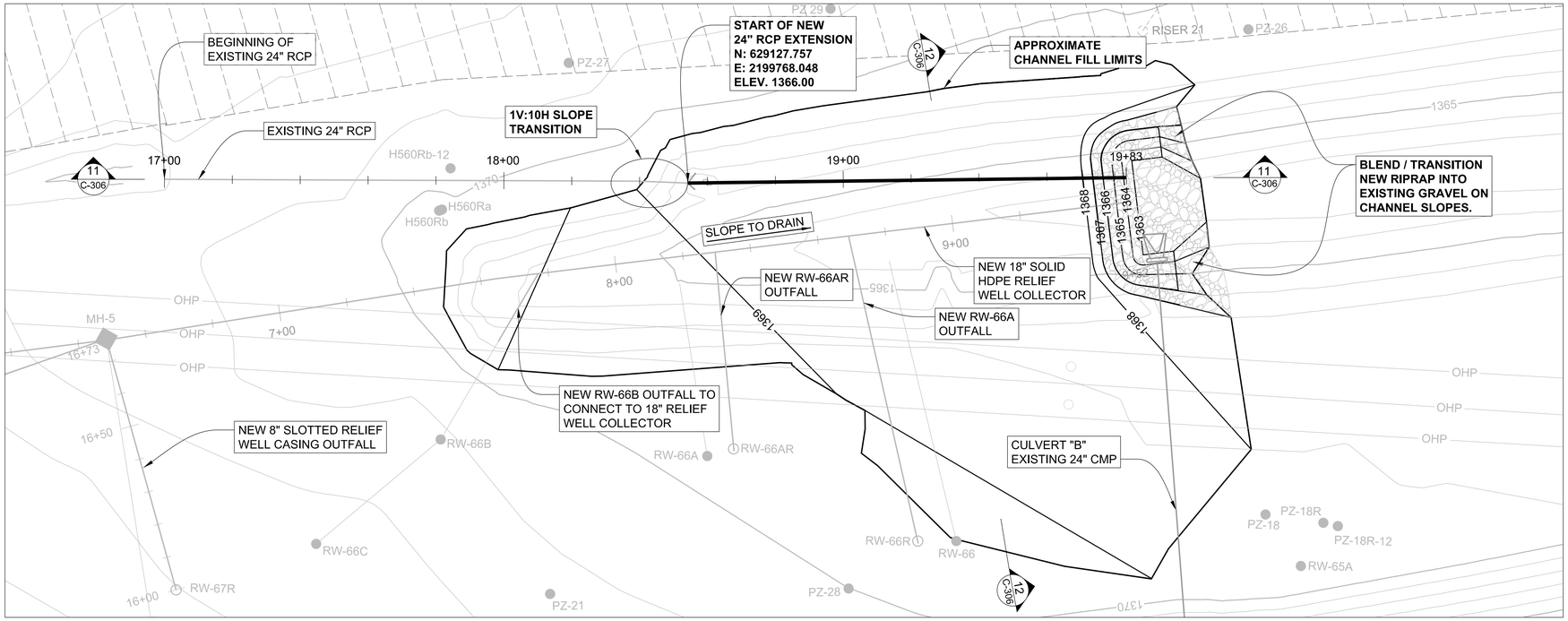

PLAN - 24-INCH RCP EXTENSION

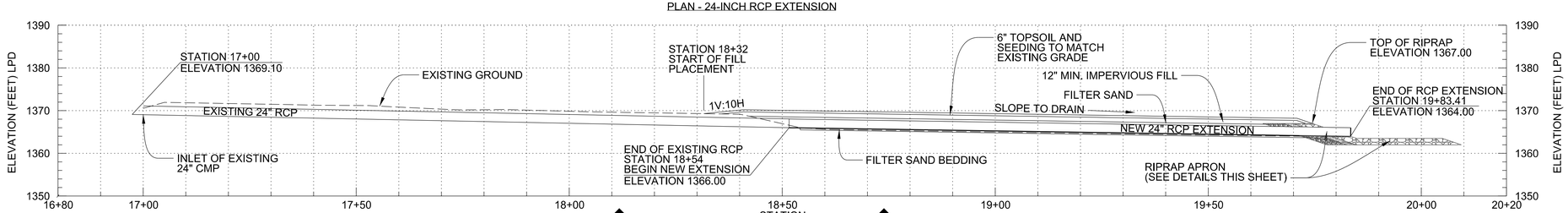

11 C-306 PROFILE - 24-INCH RCP EXTENSION 11 C-306

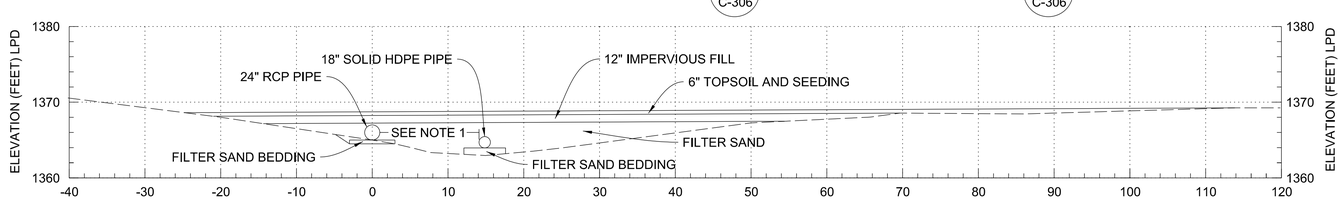

12 C-306 SECTION - 24-INCH RCP EXTENSION AND RW COLLECTOR 12 C-306

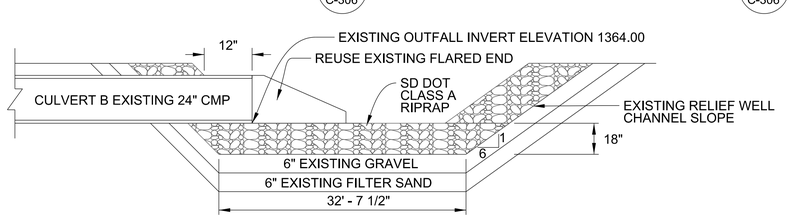

RIPRAP APRON DETAIL C - EXISTING 24" CMP (CULVERT B)
NOT TO SCALE

NOTES:

1. DISTANCE BETWEEN RCP EXTENSION AND NEW COLLECTOR VARIES UNTIL REACHING PLUNGE POOL AREA. OUTFALLS WILL BE A MINIMUM OF 3.5 FEET APART AT END.

2. CONTRACTOR MAY ENCOUNTER STABILIZATION RIPRAP FROM PREVIOUS CONTRACT IN BOTTOM AND WEST SLOPE OF RELIEF WELL CHANNEL BENEATH THE GRAVEL-FILLED GEOSYNTHETIC MAT. SEE SHEET FIO-12 FOR ADDITIONAL INFORMATION.

3. FOR 24-INCH RCP EXTENSION AND RELIEF WELL COLLECTOR PIPE, THE EXISTING GEOSYNTHETIC MAT ON THE SLOPE OF THE RELIEF WELL CHANNEL MUST BE REMOVED PRIOR TO EXCAVATION. REMOVAL EXTENTS OF GEOSNYTHETIC MAT MUST BE LIMITED TO THE EXTENT REQUIRED FOR OUTFALL INSTALLATION.

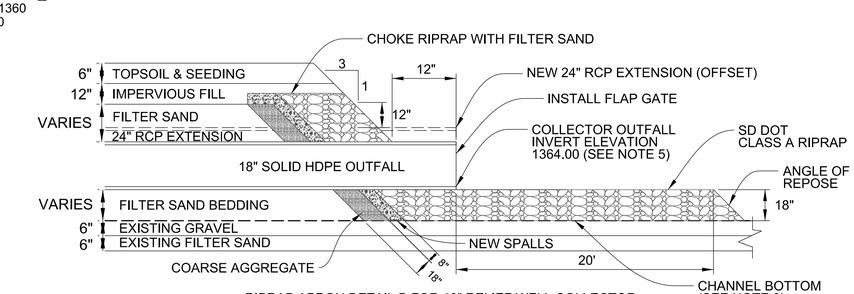

RIPRAP APRON DETAIL B FOR 18" RELIEF WELL COLLECTOR AND 24" RCP EXTENSION
NOT TO SCALE

LEGEND

- PIEZOMETER
- RELIEF WELL
- MANHOLE
- CULVERT EXTENSION
- RELIEF WELL COLLECTOR AND OUTFALLS
- CULVERT
- OBSERVATION WELL
- NON-WORK AREA
- OHP — OVERHEAD POWER LINES
- FINAL GRADE CONTOUR
- EXISTING CONTOUR
- REPLACEMENT RELIEF WELL INSTALLED BY USACE
- POWER POLE
- HERRING BONE RISER
- HERRING BONE DRAIN

SCALE: 1 INCH = 20 FEET
20' 0 20'

US ARMY CORPS OF ENGINEERS
OMAHA DISTRICT

MARK	DESCRIPTION	DATE	APPR.

MARK	DESCRIPTION	DATE	APPR.

DESIGNED BY: KPB/CLR
DWN BY: CLR/AL
CKD BY: RLC/CBL
SUBMITTED BY: ALB
FILE NAME: BB90C303.DGN
SIZE: 33.1X22
PLOT SCALE:
DATE: NOVEMBER 2022
SOLICITATION NO.: W912BF-22-B-0005
CONTRACT NO.: W912BF-23-C-XXX
FILE NUMBER:
PLOT DATE:

U. S. ARMY ENGINEER DISTRICT
CORPS OF ENGINEERS
OMAHA, NEBRASKA

BIG BEND DAM - LAKE SHARPE
FORT THOMPSON, SOUTH DAKOTA
REPLACEMENT OF LEFT ABUTMENT
COLLECTOR PIPE SYSTEM

24-INCH RCP EXTENSION
PLAN, SECTION, AND
RIPRAP APRON DETAILS

SHEET IDENTIFICATION NUMBER
C-306

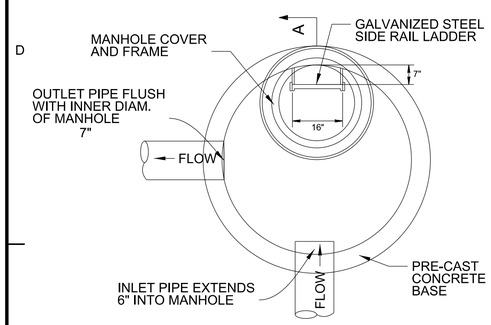

PLAN

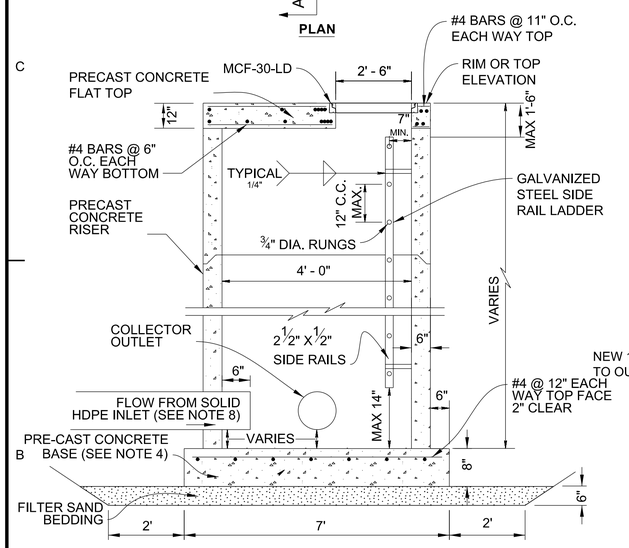

SECTION A: TYPICAL PRECAST MANHOLE

NO SCALE

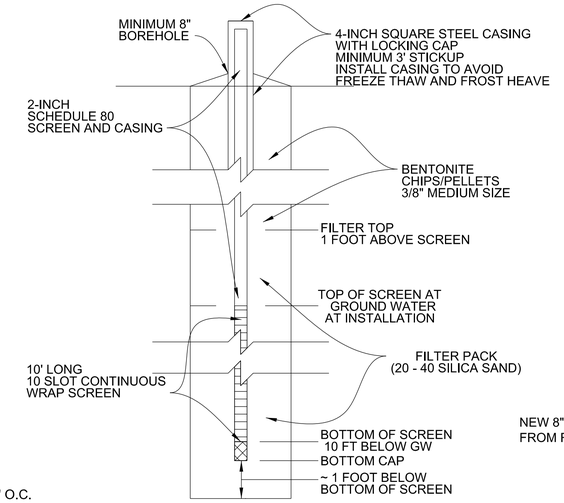

NEW PIEZOMETER DETAIL
NO SCALE

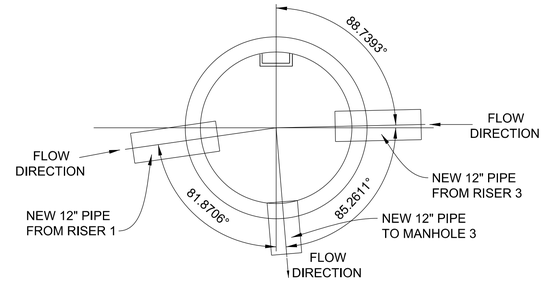

NEW MANHOLE 2
N: 629,580.68
E: 2,199,388.09

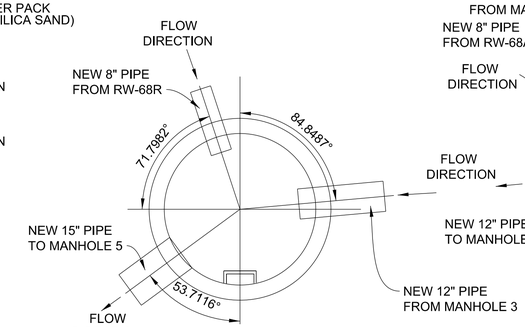

NEW MANHOLE NO 4
N: 629,445.47
E: 2,199,504.61

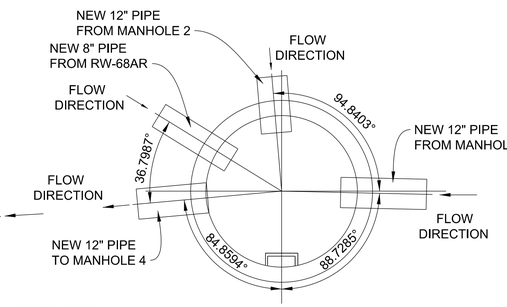

NEW MANHOLE NO 3
N: 629,589.27
E: 2,199,491.64

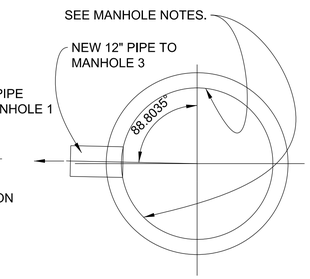

EXISTING MANHOLE 1
N: 629,856.89
E: 2,199,497.36

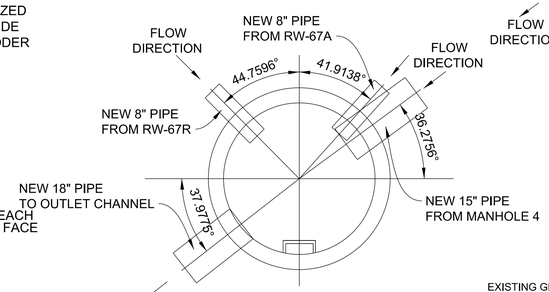

MANHOLE NO 5
N: 629,255.23
E: 2,199,644.71

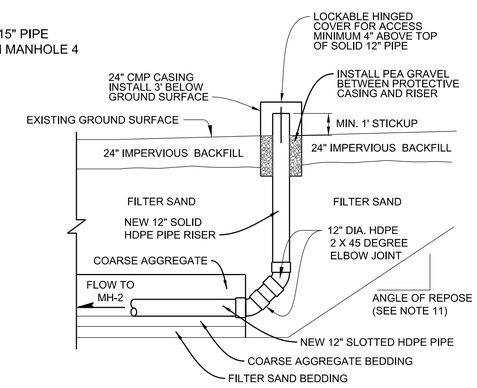

DETAIL D - NEW RISER 1 AND RISER 3
NO SCALE

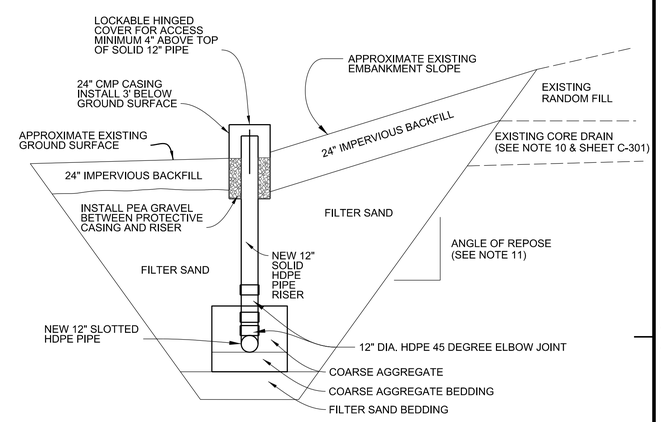

DETAIL E - NEW RISER 1 AND RISER 3 SUBDRAIN
NO SCALE

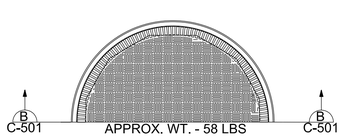

HALF PLAN

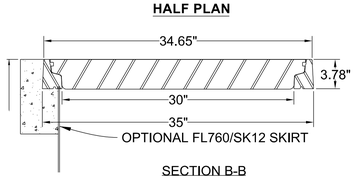

SECTION B-B

MANHOLE COVER AND FRAME

NO SCALE

NOTES:

1. PRECAST MANHOLES INCLUDING FRAMES, COVERS, RISERS, TOPS, AND LADDERS WILL BE FURNISHED AND INSTALLED BY CONTRACTOR.
2. MANHOLES HAVE PRECAST CONCRETE FLAT TOPS.
3. THICKNESS AND REINFORCING FOR PRECAST CONCRETE MANHOLE WALLS AND REINFORCING FOR PRECAST CONCRETE FLAT TOPS ARE SHOWN ON SECTION A, TYPICAL PRE-CAST MANHOLE DETAIL.
4. MANHOLE BASE SLABS ARE 6-FOOT DIAMETER BY 8-INCH THICK PRE-CAST CONCRETE BASES.
5. MANHOLE COVERS AND FRAMES ARE FIBRELITE FL760.
6. PERMANENTLY INSTALLED GALVANIZED SIDE RAIL LADDERS MUST BE INSTALLED IN ALL MANHOLES. IN ADDITION TO STEEL LADDERS, A LADDER CLIMBING SAFETY DEVICE MUST BE INSTALLED IN ALL MANHOLES WITH A DEPTH GREATER THAN 20 FEET. DEPTH OF MANHOLES MUST BE MEASURED FROM THE TOP OF THE FRAME TO THE INVERT OF THE SUBDRAIN.
7. A MINIMUM LAYER OF 6" COMPACTED FILTER SAND BEDDING MUST BE PLACED BENEATH THE PRE-CAST CONCRETE MANHOLE.
8. THE SEGMENT OF PIPES CONNECTING TO AND/OR PROTRUDING INTO MANHOLES MUST BE MADE WITH SOLID HDPE PIPE TO ALLOW GROUTING AND/OR FLOW MEASUREMENTS. THE MAXIMUM LENGTH OF THE SOLID HDPE CONNECTION MUST NOT EXCEED 5 FEET.
9. MANHOLE MH-1 HAS ASBESTOS BITUMINOUS COATING ON THE INSIDE OF THE RISER, SEE SPECIFICATIONS SECTION 02 82 00 ASBESTOS CONTAINING MATERIALS FOR ADDITIONAL REQUIREMENTS.
10. FOR EMBANKMENT CORE DRAIN CONNECTION REQUIREMENTS, REFER TO SPECIFICATION 31 23 00.00 20, EXCAVATION AND BACKFILLING FOR LEFT ABUTMENT COLLECTOR PIPE SYSTEM.
11. THE EXCAVATION AND SLOPES SHOWN ARE FOR VISUAL REFERENCE ONLY. SEE SHEET C-505 FOR EXCAVATION AND BACKFILLING DETAILS.

US ARMY CORPS OF ENGINEERS
OMAHA DISTRICT

MARK	DESCRIPTION	DATE	APPR.	MARK	DESCRIPTION	DATE	APPR.

U. S. ARMY ENGINEER DISTRICT
CORPS OF ENGINEERS
OMAHA, NEBRASKA

DESIGNED BY: KPB/CLR | DATE: NOVEMBER 2022
DWN BY: CLR/JAL | CKD BY: KPB/CBL | SOLICITATION NO.: W912BF-23-B-0005
SUBMITTED BY: ALB | CONTRACT NO.: W912BF-23-C-xxx
FILE NAME: BB90C501.DGN | FILE NUMBER:
SIZE: 33 X 22 | PLOT SCALE: | PLOT DATE:

BIG BEND DAM - LAKE SHARPE
FORT THOMPSON, SOUTH DAKOTA
REPLACEMENT OF LEFT ABUTMENT
COLLECTOR PIPE SYSTEM

NEW MANHOLE, RISER AND PIEZOMETER DETAILS

SHEET IDENTIFICATION NUMBER
C-501

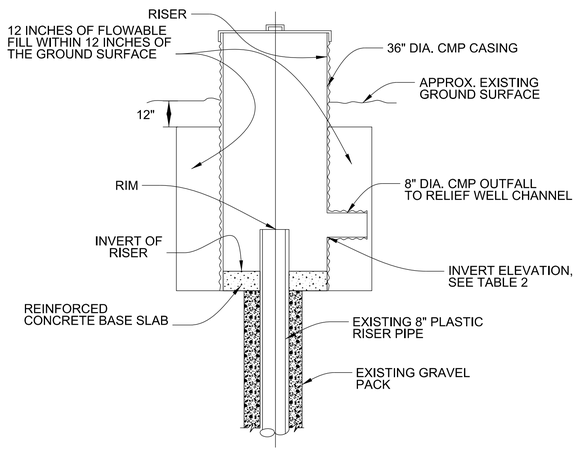

EXISTING RELIEF WELL RW-66 AND RW-67 DETAILS
NO SCALE

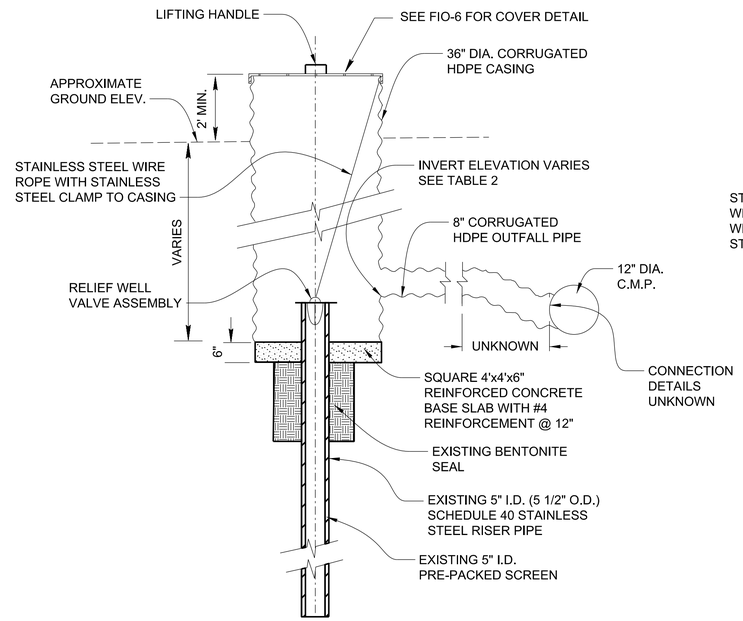

EXISTING RELIEF WELL RW-68A, RW-68B DETAILS
NO SCALE

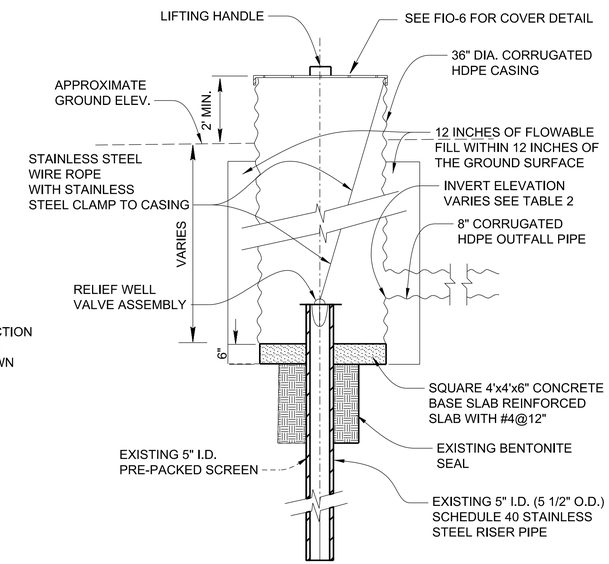

EXISTING RELIEF WELL RW-66A DETAILS
NO SCALE

TABLE 2 - EXISTING RELIEF WELL LOCATIONS AND ELEVATIONS (FEET LPD)

RELIEF WELL	NORTHING	EASTING	TOP OF RELEF WELL RISER	TOP OF CASING	TOP OF BASE SLAB	GROUND SURFACE	RELIEF WELL CASING OUTFALL INVERTS				RELIEF WELL COLLECTOR INVERT
							INLET	OUTLET AT RELIEF WELL COLLECTOR	OUTLET AT MANHOLE	OUTLET AT RELIEF WELL CHANNEL	
RW-66	629,007.89	2,199,714.39	1366.08	1371.25	1365.36	1368.95	1366.14	NA	NA	1364.27	NA
RW-66A	629,086.10	2,199,699.48	1366.28	1371.43	1365.91	1369.91	1366.44	NA	NA	1366.70	NA
RW-67	629,201.50	2,199,577.41	1366.87	1375.04	1365.45	1373.27	1366.50	NA	1366.10	NA	NA
RW-68	629,431.62	2,199,505.14	1368.60	1377.91	1366.96	1376.77	NA	NA	NA	NA	1367.94 (12" INLET) 1367.97 (15" OUTLET)
RW-68A	629,568.65	2,199,482.30	1372.81	1381.60	1371.61	1379.58	1372.82	UNKNOWN	NA	NA	NA
RW-68B	629,692.96	2,199,483.04	1374.96	1383.09	1373.13	1381.48	1374.68	UNKNOWN	NA	NA	NA

TABLE 3 - EXISTING MANHOLE AND RISER LOCATIONS AND ELEVATION (FEET LPD)

MANHOLE OR RISER NAME	NORTHING	EASTING	TOP OF MH OR RISER	GROUND SURFACE	INVERT					
					MH OR RISER	8" PERFORATED CMP	12" PERFORATED CMP	15" PERFORATED CMP	RW OUTFALL OUTLET	15" COLLECTOR PIPE OUTLET
MH-1	629,856.60	2,199,496.82	1388.56	1386.01	1376.06	NA	1376.49	NA	NA	NA
MH-2	629,256.14	2,199,642.95	1372.12	1371.36	1365.70	NA	NA	1366.20	1368.85 (RW-67A) 1366.1 (RW-67)	1366.06
RISER 1	629,732.86	2,199,384.25	1386.23	1385.58	1380.83	1380.83	NA	NA	NA	NA
RISER 2	629,580.55	2,199,387.61	1383.47	1382.70	1376.67	1376.67*	NA	NA	NA	NA
RISER 3	629,431.52	2,199,408.93	1380.33	1379.55	1376.97	1376.97*	NA	NA	NA	NA
RISER 4	629,589.05	2,199,491.16	1379.87	1378.89	1371.21	1371.21*	NA	1371.21*	NA	NA

NOTE: * APPROXIMATE ELEVATION

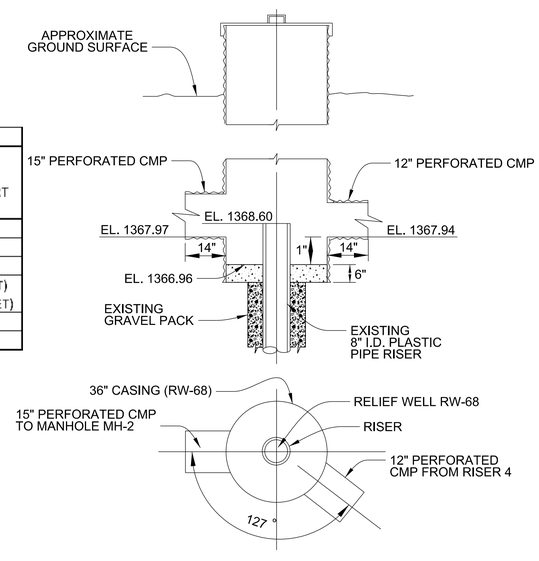

EXISTING RELIEF WELL RW-68 DETAILS
NO SCALE

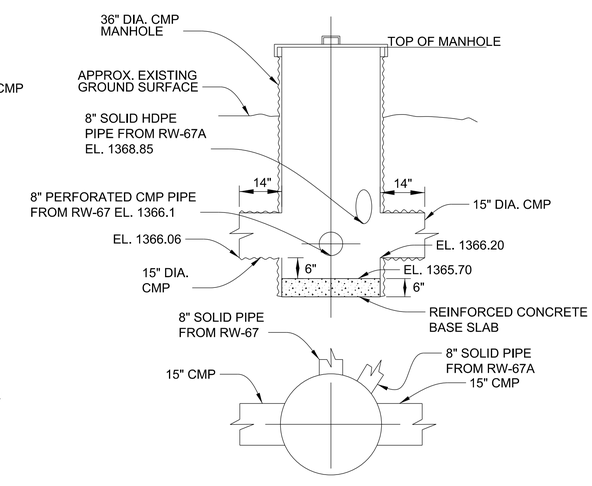

EXISTING MANHOLE MH-2 DETAILS
NO SCALE

US ARMY CORPS OF ENGINEERS
OMAHA DISTRICT

MARK	DESCRIPTION	DATE	APPR.

MARK	DESCRIPTION	DATE	APPR.

U. S. ARMY ENGINEER DISTRICT
CORPS OF ENGINEERS
OMAHA, NEBRASKA

DESIGNED BY: KPB/CLR
DATE: NOVEMBER 2022
SOLICITATION NO.: W912EP22B0005
DWN BY: CLR/BAL
CKD BY: RLC/BAL
CONTRACT NO.: W912BF-23-C-XXX
SUBMITTED BY: SLB
FILE NUMBER:
FILE NAME: BB90C502.DGN
PLOT SCALE:
SIZE: 33 X 22
PLOT DATE:

BIG BEND DAM - LAKE SHARPE
FORT THOMPSON, SOUTH DAKOTA
REPLACEMENT OF LEFT ABUTMENT COLLECTOR PIPE SYSTEM

EXISTING RELIEF WELL AND MANHOLE DETAILS

SHEET IDENTIFICATION NUMBER
C-502

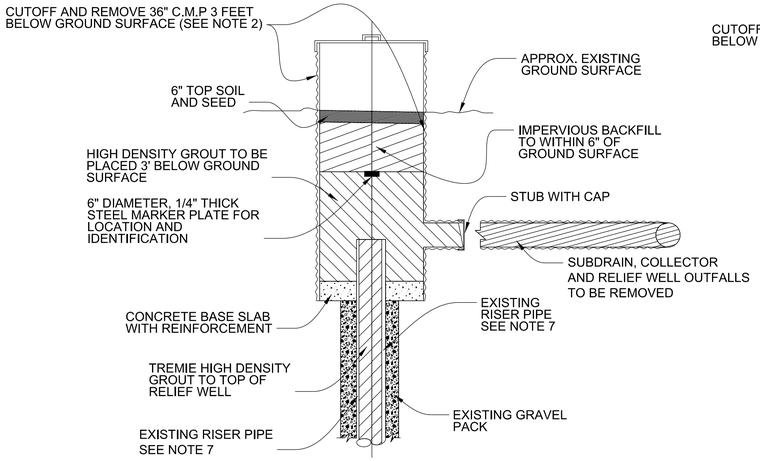

ABANDONMENT DETAILS FOR RW-67, RW-68A, AND RW-68B
NO SCALE

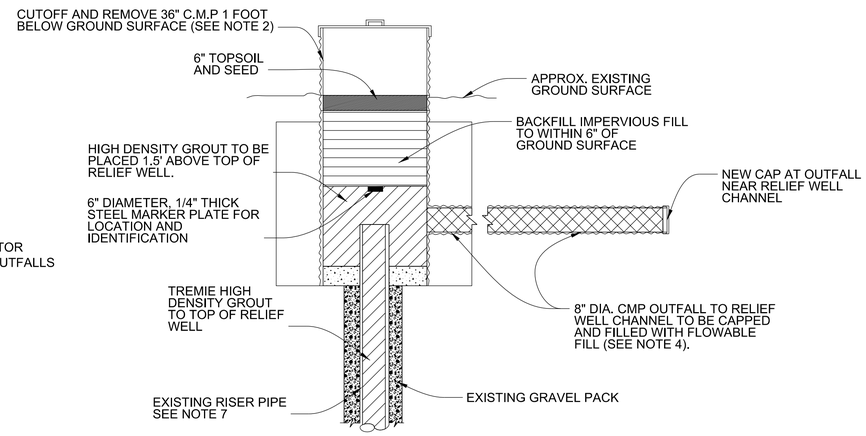

RELIEF WELL RW-66, AND RW-66A ABANDONMENT DETAILS
NO SCALE

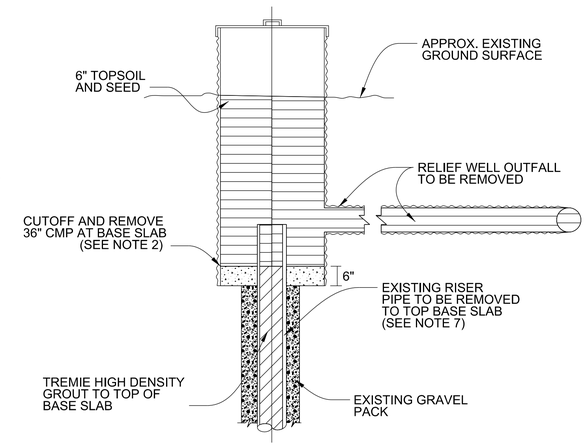

ABANDONMENT DETAILS FOR RW-68
NO SCALE

PROJECT NAME			WELL NUMBER
Drain Replacement			OW20-02
LOCATION			WELL LOCATION (Coordinates or Station)
Big Bend Dam Fort Thompson, SD			629349.363N 2199535.361E NAD83
DATE INSTALLED	STARTED 6/10/20	COMPLETED 6/10/20	TOP OF CASING ELEVATION
TOTAL DEPTH OF BOREHOLE 20.0 ft bgs	BORING DIAMETER 8 in.		SIGNATURE OF INSPECTOR/INSTALLER George Filpovich

PIEZOMETER CONSTRUCTION DIAGRAM

NO SCALE
(ALL MEASUREMENTS FROM GROUND SURFACE)

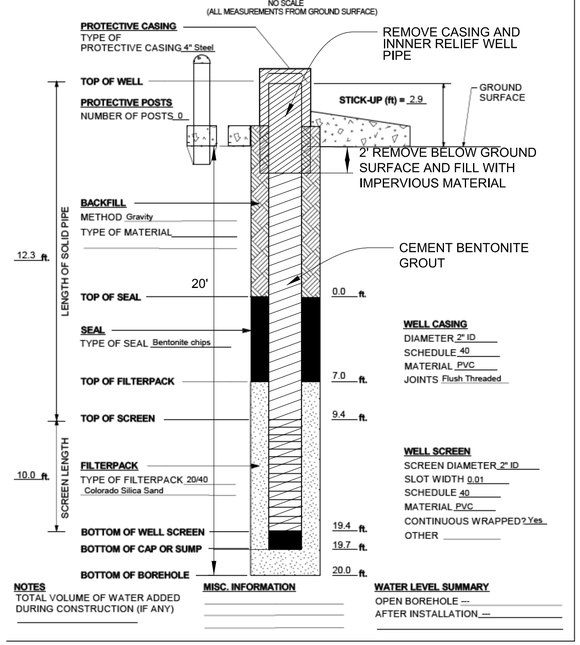

NOTES
TOTAL VOLUME OF WATER ADDED DURING CONSTRUCTION (IF ANY)

MISC. INFORMATION

WATER LEVEL SUMMARY
OPEN BOREHOLE —
AFTER INSTALLATION —

ABANDONMENT DETAILS FOR OW20-02
SEE SPECIFICATIONS FOR
ADDITIONAL ABANDONMENT DETAILS

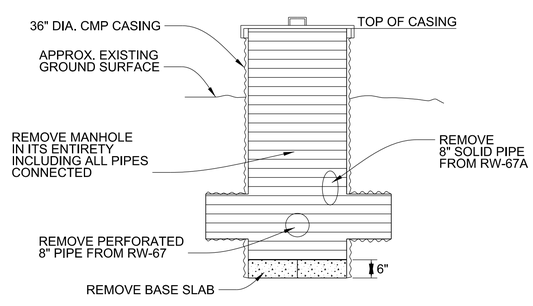

MANHOLE 2 REMOVAL DETAILS
NO SCALE

NOTES:

1. CONTRACTOR MUST SUBMIT FOR APPROVAL A SHORING AND SHEETING PLAN AND A DEWATERING PLAN IN ACCORDANCE WITH THE SPECIFICATIONS.

2. ASBESTOS TREATED BITUMINOUS COATING IS LOCATED ON THE INTERIOR OF THE 36" CMP CASING OF RELIEF WELLS RW-66, RW-67, AND RW-68, THE INTERIOR OF PERFORATED CMP COLLECTOR PIPES, THE INTERIOR OF 8" OUTFALL PIPES, THE 8" TOE DRAIN RISERS (1,2,3,4) AND MANHOLE 2. CARE SHOULD BE TAKE DURING ABANDONMENT OF THE WELLS AND DISCONNECTION OF OUTFALL PIPES FROM THE COLLECTOR PIPE SYSTEM. SEE SPECIFICATION SECTION 02 82 00 TITLE "ASBESTOS CONTAINING MATERIALS" FOR REQUIREMENTS.

3. SEE SPECIFICATIONS FOR RELIEF WELL ABANDONMENT REQUIREMENTS.

4. FLOWABLE FILL REQUIREMENTS FOR THE ABANDONMENT OF RELIEF WELLS RW-66 AND RW-66A CAN BE FOUND IN THE SPECIFICATIONS.

5. EXCAVATION DETAILS NOT SHOWN.

6. DURING INITIAL INSTALLATION OF RW-66 AND RW-66A FLOWABLE FILL WAS PLACED AROUND CORRUGATED RISERS AND MAY REQUIRE REMOVAL TO ABANDON WELL.

7. 8" PLASTIC RISER PIPES WERE INSTALLED FOR RW-66, RW-67, RW-68. 5" STAINLESS STEEL RISERS WERE INSTALLED FOR RW-66A, RW-68A, RW-68B,

US ARMY CORPS OF ENGINEERS
OMAHA DISTRICT

MARK	DESCRIPTION	DATE	APPR.	MARK	DESCRIPTION	DATE	APPR.

U. S. ARMY ENGINEER DISTRICT
CORPS OF ENGINEERS
OMAHA, NEBRASKA

DESIGNED BY: KPB/CLR | DATE: NOVEMBER 2022 | SOLICITATION NO.: W912P8-22-B-0005
DWN BY: CLR/BEL | CKD BY: RLC/BEL | CONTRACT NO.: W912BF-23-C-XXX
SUBMITTED BY: SLB | FILE NUMBER:
FILE NAME: BB90C503.DGN | PLOT SCALE: | PLOT DATE:
SIZE: 33 X 22

BIG BEND DAM - LAKE SHARPE
FORT THOMPSON, SOUTH DAKOTA
REPLACEMENT OF LEFT ABUTMENT
COLLECTOR PIPE SYSTEM

EXISTING RELIEF WELL AND MANHOLE ABANDONMENT DETAILS

SHEET IDENTIFICATION NUMBER
C-503