BATTERIES POWERED HEPA FILTERED NEGATIVE PRESSURE WORK ENCLOSURE

HEPAZONE 24

RUNS ON ITS OWN POWER

The practical solution to carry out minor jobs without risk of site contamination with ASBESTOS, MOLD, SPORES, etc.

The Hepa-Zone transforms a wall or ceiling work application into a negative pressure work zone. It protects the surrounding environment from harmful, and nuisance dust.

QUALITAIR
FOR A HEALTHY ENVIRONMENT

INFO@QUALITAIR.CA - WWW.QUALITAIR.CA - 1-877-444-8012

1. MOBILE CONTAINMENT UNIT SHOWN IN DETAIL 1/PL-501 IS FOR REFERENCE ONLY. ANY MANUFACTURER FOR A CONTAINMENT UNIT CAN BE UTILIZED AS LONG AS IT HAS SUFFICIENT HEPA FILTRATION AND PROVIDES A NEGATIVE AIR ENVIRONMENT. SHOP DRAWINGS SHALL BE SUBMITTED AND APPROVED PRIOR TO USE.

2. CONTRACTOR SHALL UTILIZE HEPA FILTERED MOBILE CONTAINMENT UNIT FOR COMPLETION OF WORK IN WHICH THE MOBILE CONTAINMENT UNIT SATISFIES ALL ICRA REQUIEMENTS. IN CASE MOBILE CONTAINMENT UNIT WILL NOT SATISFY ALL ICRA REQUIREMENTS CONTRACTOR SHALL PROVIDE A STATIONARY CONTAINMENT BOOTH WITH SUFFICIENT HEPA FILTRATION WHICH PROVIDES A NEGATIVE AIR ENVIRONMENT TO SATISFY ICRA REQUIREMENTS. SHOP DRAWINGS SHALL BE SUBMITTED FOR APPROVAL PRIOR TO USE.

3. CONTRACTOR SHALL UTILIZE TELESCOPING, HEPA-FILTERED WORK CONTAINMENT EQUIPMENT FOR ALL ABOVE CEILING WORK, WHETHER OR NOT ASBESTOS RELATED.

1 / PL-501 QUALITAIR HEPAZONE 24 HEPA FAN FILTER UNIT DETAIL
SCALE:NO SCALE

Revisions:	Date:

CONSULTANT

ARCHITECT/ENGINEER OF RECORD
NEI NORTHEAST INFRASTRUCTURE, LLC
34 BROWN STREET
HONESDALE, PA 18431
OFFICE : (570) 253-0846
FAX : (570) 253-1935
WWW.NEINFRA.COM

STAMP
STATE OF NEW YORK · DALE L. ENGLEHART · 080021 · LICENSED PROFESSIONAL ENGINEER

Office of Construction and Facilities Management
VA U.S. Department of Veterans Affairs

Drawing Title: PLUMBING DETAILS 2	Phase: CONSTRUCTION DOCUMENTS	Project Title: IMPROVE POTABLE WATER DISTRIBUTION SYSTEM	Project Number: 528A4-16-205
			Building Number: N/A
Approved: Project Director: VA NEW YORK HEALTHCARE SYSTEM		Location: 222 RICHMOND AVENUE BATAVIA, NY 14020	Drawing Number: PL-501
		Issue Date: 06/08/2022 · Checked: D.L.E. · Drawn: K.E.B.	

VA FORM 08 - 6231

File Path
6/14/2009 12:39:03 PM

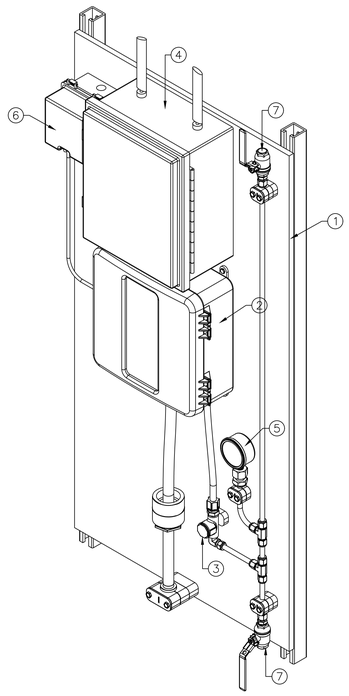

1 PL-502 PWA BASIS OF DESIGN MONITORING PANEL 3D
SCALE: N.T.S.

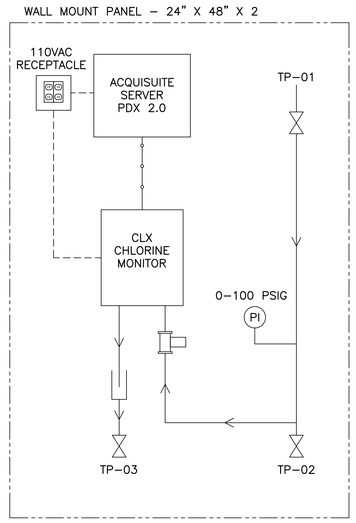

2 PL-502 PWA BASIS OF DESIGN MONITORING PANEL
SCALE: N.T.S.

TERMINATION POINTS LIST FOR 2/PL-502		
TP	SERVICES	CONNECTION
TP–01	SYSTEM INLET	3/8" F–NPT
TP–02	LINE DRAIN	3/8" F–NPT
TP–03	INSTRUMENT DRAIN	1/2" F–NPT

2/PL-502 KEYED NOTES:

1. BACK PLATE, 1/2" THICK, BLACK PP, WITH FRP UNISTRUT FOR WALL MOUNT
2. ONLINE RESIDUAL CHLORINE MONITOR
3. STRAINER, 1/4" F–NPT, INLINE, V–PATTERN, WATTS, LF27
4. PDX ENCLOSURE, 12"x10"x6", FRP NEMA 4X
5. PRESSURE GAUGE, 0–160 PSI, 2–1/2" 316 S.S. CASE GAUGE, LIQ FILLED, 1/4" MNPT PROCESS CONNECTION
6. RECEPTACLE NEMA 5–15 WHITE 125 VAC 15 AMPS
7. VALVE BALL, 3/8" F–NPT, 2PC, 1000 WOG, 316 S.S., TC–02X

3/PL-502 LEGEND:

- BALL VALVE
- NEEDLE VALVE
- GATE VALVE
- TEE STRAINER
- SUPPLY POWER (TYP)
- PI — PRESSURE GAUGE
- MODBUS
- ANALOG SIGNAL (4–20mA DC)

3/PL-502 GENERAL NOTES:

1. ALL FITTINGS AND TUBING – 316 SS, 3/8" TUBE
2. ALL INLET/OUTLET CONNECTIONS – FLUSH WITH THE BACK PANEL
3. SYSTEM MOUNTED ON BLACK PP PANEL

3/PL-502 CONNECTIONS:

TP–01 SYSTEM INLET – 3/8" F–NPT
TP–02 LINE DRAIN – 3/8" F–NPT
TP–03 INSTRUMENT DRAIN – 1/2" F–NPT

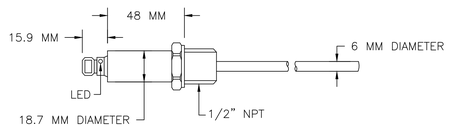

NOTE: ANALOG WITH TWISTED PAIT IN COMPLETE AND WORKING SYSTEM.

3 PL-502 TEMPERATURE SENSOR
SCALE: N.T.S.

Revisions:	Date:

CONSULTANT

ARCHITECT/ENGINEER OF RECORD

NORTHEAST INFRASTRUCTURE, LLC
34 BROWN STREET
HONESDALE, PA 18431
OFFICE : (570) 253-0846
FAX : (570) 253-1935
WWW.NEINFRA.COM

STAMP

STATE OF NEW YORK · DALE L. ENGLEHART · 080031 · LICENSED PROFESSIONAL ENGINEER

Office of Construction and Facilities Management

VA U.S. Department of Veterans Affairs

Drawing Title: PLUMBING DETAILS 3

Phase: CONSTRUCTION DOCUMENTS

Project Title: IMPROVE POTABLE WATER DISTRIBUTION SYSTEM

Project Number: 528A4-16-205

Building Number: N/A

Approved: Project Director: VA NEW YORK HEALTHCARE SYSTEM

Location: 222 RICHMOND AVENUE BATAVIA, NY 14020

Issue Date: 06/08/2022 | Checked: D.L.E. | Drawn: K.E.B.

Drawing Number: PL-502

File Path: 6/14/2009 12:49:03 PM

VA FORM 08 - 6231

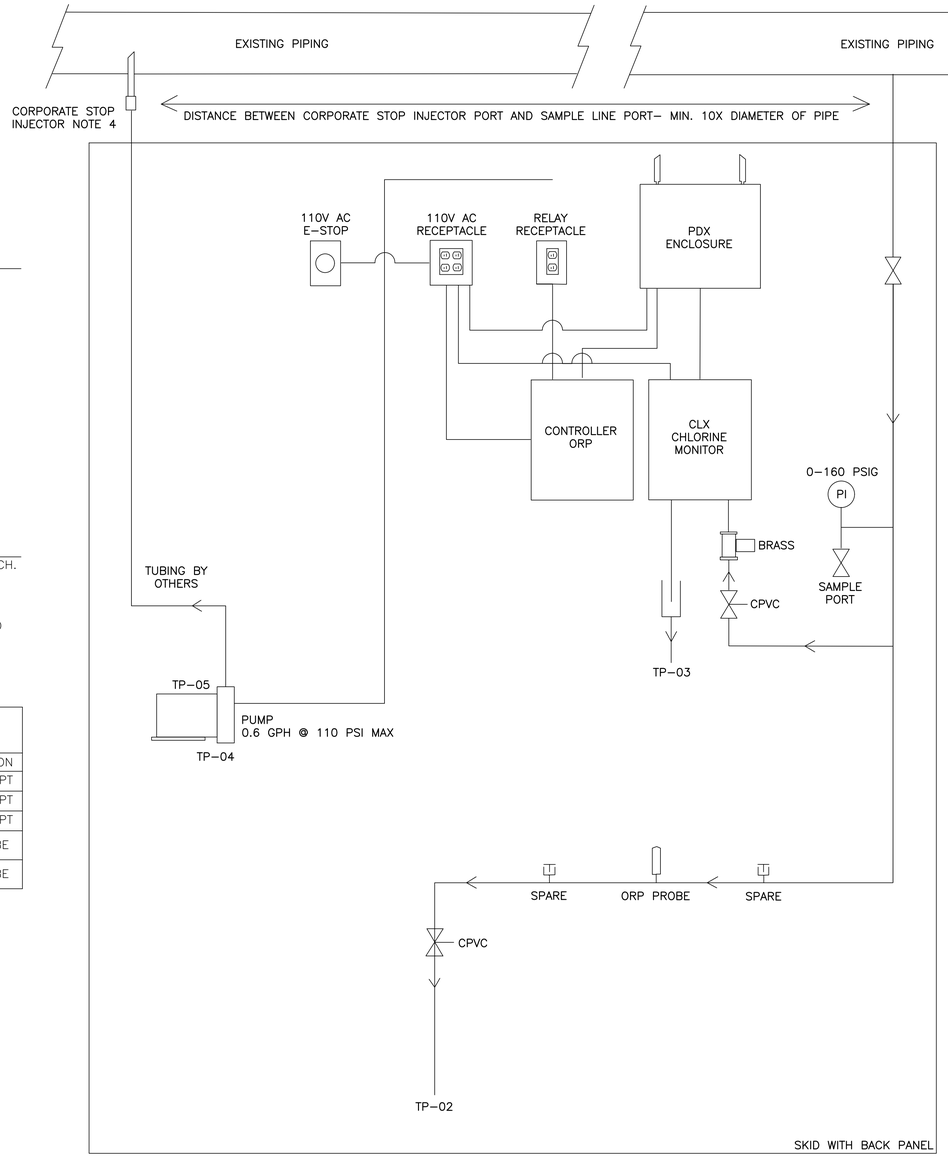

1/PL–503 LEGEND:

- BALL VALVE
- NEEDLE VALVE
- GATE VALVE
- TEE STRAINER
- SUPPLY POWER (TYP)
- PI — PRESSURE GAUGE
- MODBUS
- ANALOG SIGNAL (4–20mA DC)

1/PL–503 GENERAL NOTES:

1. ALL FITTINGS AND PIPING – CPVC, SCH. 80, VITON
2. ALL INLET/OUTLET CONNECTIONS – FLUSH WITH THE SKID
3. SYSTEM MOUNTED ON BLACK PP SKID
4. SHIP LOOSE: CORPORATE STOP INJECTOR, TUBING CLIPS AND SPARE O–RINGS (3 SETS)

TERMINATION POINTS LIST FOR 1/PL–503

TP	SERVICES	CONNECTION
TP–01	SYSTEM INLET	1/2" F–NPT
TP–02	SYSTEM OUTLET	1/2" F–NPT
TP–03	INSTRUMENT DRAIN	1/2" F–NPT
TP–04	CHEMICAL INLET – PUMP CONNECTION	3/8" TUBE
TP–05	CHEMICAL OUTLET – PUMP CONNECTION	3/8" TUBE

1 PL–503 PWA BASIS OF DESIGN SUPPLEMENTAL DISINFECTION SYSTEM

SCALE: N.T.S.

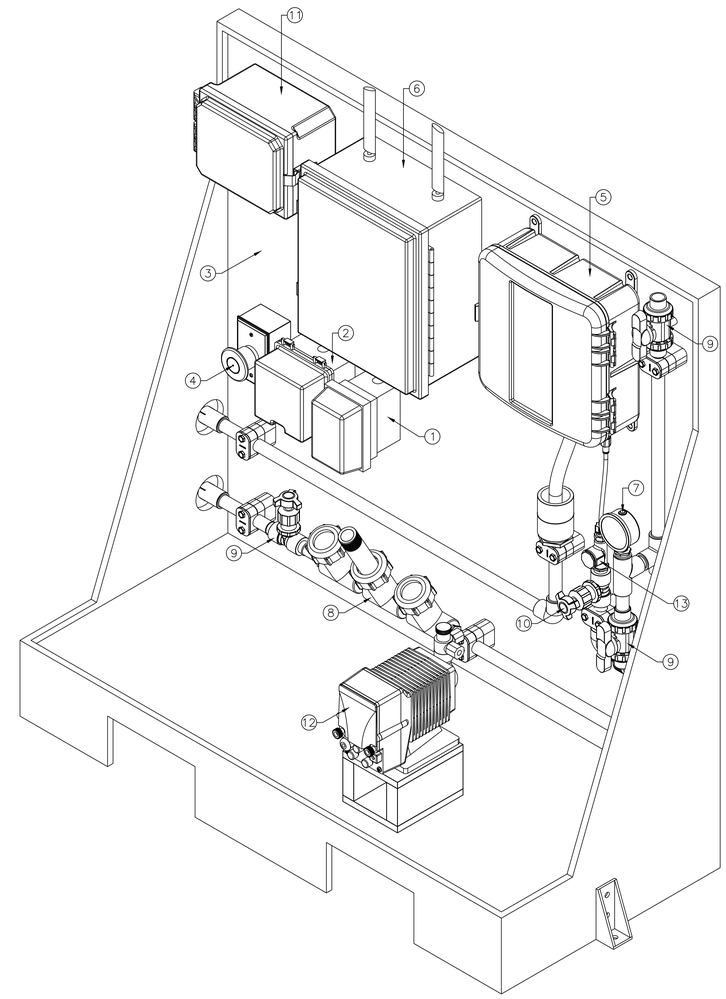

2/PL–503 KEYED NOTES:

1. RECEPTACLE NEMA 5–15 WHITE 125 VAC 15 AMPS, QTY. 2
2. RECEPTACLE NEMA 5–15 WHITE 125 VAC 15 AMPS, QTY. 4
3. BASE, 44"W x 46"H x 20"D, 1/2" BLACK POLYPROPYLENE, WELDED
4. E–STOP PUSH BUTTON
5. ONLINE RESIDUAL CHLORINE MONITOR CLX
6. PDX ENCLOSURE, 12"x10"x6", FRP NEMA 4X
7. PRESSURE GAUGE S.S., 0–160 PSI, 1/4" M–NPT PROCESS CONNECTION, GLYCERIN FILLED, BOTTOM MOUNT
8. PROBE ORP, GRAPHITE, GLASS, VITON O–RING, HDPE, TITANIUM ROD
9. VALVE BALL, 1/2" SW, VITON O–RINGS, TRUE UNION, CPVC
10. VALVE GLOBE NEEDLE, 1/2" F–NPT, CPVC/PTFE
11. CONTROLLER
12. PUMP, 0.6 GPH @ 110 PSI, 3/8" INLET/OUTLET TUBING, 115 VAC, 50/60 HZ, PVC HEAD
13. STRAINER, 1/4" F–NPT, INLINE, V–PATTERN, WATTS, LF27, HF SCIENTIFIC

2/PL–503 GENERAL NOTES:

1. ALL FITTINGS AND PIPING – CPVC, SCH. 80, VITON
2. ALL INLET/OUTLET CONNECTIONS – FLUSH WITH THE SKID
3. ALL DIM ± 0.25"
4. SHIP LOOSE: CORPORATE STOP INJECTOR, TUBING CLIPS AND SPARE O–RINGS (3 SETS)

TERMINATION POINTS LIST FOR 2/PL–503

TP	SERVICES	CONNECTION
TP–01	SYSTEM INLET	1/2" F–NPT
TP–02	SYSTEM OUTLET TO DRAIN	1/2" F–NPT
TP–03	INSTRUMENT DRAIN	1/2" F–NPT
TP–04	FROM 30 GAL TANK – SHIP LOOSE	PUMP CONNECTION – 3/8" TUBE
TP–05	TO CORPORATE STOP INJECTOR	PUMP CONNECTION – 3/8" TUBE

2 PL–503 PWA BASIS OF DESIGN SUPPLEMENTAL DISINFECTION SYSTEM 3D

SCALE: N.T.S.

Revisions:	Date:

CONSULTANT

ARCHITECT/ENGINEER OF RECORD

NEI NORTHEAST INFRASTRUCTURE, LLC
34 BROWN STREET
HONESDALE, PA 18431
OFFICE : (570) 253-0846
FAX : (570) 253-1935
WWW.NEINFRA.COM

STAMP

STATE OF NEW YORK · DALE E. ENGELHART · 090021 · LICENSED PROFESSIONAL ENGINEER

Office of Construction and Facilities Management

VA U.S. Department of Veterans Affairs

Drawing Title: PLUMBING DETAILS 4

Phase: CONSTRUCTION DOCUMENTS

Project Title: IMPROVE POTABLE WATER DISTRIBUTION SYSTEM

Project Number: 528A4-16-205

Building Number: N/A

Approved: Project Director: VA NEW YORK HEALTHCARE SYSTEM

Location: 222 RICHMOND AVENUE BATAVIA, NY 14020

Issue Date: 06/08/2022 | Checked: D.L.E. | Drawn: K.E.B.

Drawing Number: PL-503

File Path: 6/14/2009 12:39:03 PM

VA FORM 08 - 6231

ABBREVIATIONS

AMP./A.	AMPERE
AC.	ALTERNATING CURRENT
A/C.	AIR CONDITION
A.F.F.	ABOVE FINISHED FLOOR
AFG	ABOVE FINISHED GRADE
A.I.C.	AMPERES INTERRUPTING CAPACITY
AL	ALUMINUM
ARCH.	ARCHITECTURAL
A.R.F.	ABOVE RAISED FLOOR
ASY.	ASYMMETRICAL
A.T.C.	AUTOMATIC TEMPERATURE CONTROL
ATS	AUTOMATIC TRANSFER SWITCH
AUX.	AUXILIARY
B.F.S.	BELOW FINISHED CEILING
BLDG.	BUILDING
BMS	BUILDING MANAGEMENT SYSTEM
BKR.	BREAKER
BSMT.	BASEMENT
.C.	CENTIGRADE DEGREES
CLG.	CEILING
CKT.	CIRCUIT
CB	CIRCUIT BREAKER
CW	CLOCKWISE
COL.	COLUMN
CONC.	CONCRETE
CCTV	CLOSED CIRCUIT TELEVISION
C.	CONDUIT
CONDR.	CONDUCTOR
CU. FT.	CUBIC FEET
CONTR.	CONTRACTOR
CU.	COPPER
CONST.	CONSTRUCTION
COAX.	COAXIAL
COORD.	COORDINATE
CONT.	CONTINUATION
CMU	CONCRETE MASONRY UNIT
C.T.	CURRENT TRANSFORMER
DEMO	DEMOLITION
DISC.	DISCONNECT SWITCH
DIV.	DIVISION
DN.	DOWN
EA.	EACH
E.F.	EXHAUST FAN
ELEC. CL.	ELECTRICAL CLOSET
ELEC.	ELECTRICAL
E.C.	ELECTRICAL CONTRACTOR
ELEV/EL.	ELEVATION/ELEVATOR
EMT	ELECTRICAL METALLIC TUBING
ENT.	ENTRANCE
ENCL.	ENCLOSURE
EQ.	EQUAL
EQUIP.	EQUIPMENT
E.W.	EACH WAY
EXT.	EXTERNAL/EXTERIOR
F.A.	FIRE ALARM
FACP	FIRE ALARM CONTROL PANEL
.F.	FAHRENHEIT DEGREES
FC	FOOTCANDLE
FT.	FEET
F.E.	FIRE EXTINGUISHER
FDN.	FOUNDATION
FIN.	FINISH/FINISHED
FIXT.	FIXTURE
FLEX.	FLEXIBLE
FL.	FLOOR
FLA	FULL LOAD AMPERES
FLUOR.	FLUORESCENT
GA.	GAGE/GAUGE
GALV.	GALVANIZED
G.C.	GENERAL CONTRACTOR
GEN.	GENERATOR
GND.	GROUND
G.F.A.	GROUND FAULT INTERRUPTER
G.R.S.C.	GALVANIZED RIGID STEEL CONDUIT
HT.	HEIGHT
H.I.D.	HIGH INTENSITY DISCHARGE
HORIZ.	HORIZONTAL
H.O.A.	HAND OFF AUTO
HP.	HORSEPOWER
H.P.S.	HIGH PRESSURE SODIUM
HZ.	HERTZ
INC.	INCANDESCENT
IMC	INTERMEDIATE CONDUIT
ISOL.	ISOLATED
INSUL.	INSULATION/INSULATED
J	JUNCTION BOX
KHZ	KILOHERTZ
KW	KILOWATT
KWH	KILOWATT HOUR
KVA	KILOVOLT–AMPERE
KVAR	KILOVAR
KV	KILOVOLT
LAN	LOCAL AREA NETWORK
LG.	LENGTH
LF	LINEAR FEET
LT	LIGHT
LTG	LIGHTING
LRA	LOCKED ROTOR AMPERES
LG	LONG
MCC	MOTOR CONTROL CENTER
M.C.	MECHANICAL CONTRACTOR
M/C	MULTI–CONDUCTOR
MDS	MAIN DISTRIBUTION SWITCHBOARD
MDP	MAIN DISTRIBUTION PANEL
MANUF.	MANUFACTURER
MF	MAINTENANCE FACTOR
MAX.	MAXIMUM
MB	MAIN BREAKER
MECH.	MECHANICAL
MCM	THOUSAND CIRCULAR MILLS
MG	MOTOR GENERATOR
MTD.	MOUNTED
MIN.	MINIMUM
M.L.O.	MAIN LUGS ONLY
MTS	MANUAL TRANSFER SWITCH
N.	NEUTRAL
NC	NORMAL CLOSED
N.E.C.	NATIONAL ELECTRICAL CODE
NEMA	NATIONAL ELECTRICAL MANUFACTURERS ASSOCIATION
NIC	NOT IN CONTRACT
NO	NORMALLY OPEN
NTS	NOT TO SCALE
NO./#	NUMBER
ϕ	PHASE
P.V.C.	POLYVINYLCHLORIDE
PB	PULL BOX
PNL.	PANELBOARD
P.C.	PLUMBING CONTRACTOR
PRI.	PRIMARY
R.	RADIUS
RF	RADIO FREQUENCY
REBAR.	REINFORCING BAR
RECEPT.	RECEPTACLE
REQ'D	REQUIRED
REV.	REVISE/REVISION
REC.	RECESSED
R..SW.	REMOTE CONTROL SWITCH
RGS	RIGID GALVANIZED STEEL CONDUIT
SECT.	SECTION
SEC.	SECONDARY
SERV.	SERVICE
1/C	SINGLE CONDUCTOR
SK.	SKETCH
SPECS.	SPECIFICATIONS
SQ.	SQUARE
S.F.	SQUARE FEET
STA.	STATION
SW.	SWITCH
S.S.	STAINLESS STEEL
SW'BD	SWITCHBOARD
SYM.	SYMMETRICAL
SUSP.	SUSPENDED
SEP.	SEPARATE
SHT.	SHEET
SIG.	SIGNAL
SN	SOLID NEUTRAL
SURF.	SURFACE
THRU	THROUGH
TEL.	TELEPHONE
TRANSF./XFMR	TRANSFORMER
TYP.	TYPICAL
U.O.C.	UNLESS OTHERWISE NOTED
U.R.F.	UNDER RAISED FLOOR
VS.	VERSUS
VERT.	VERTICAL
VD	VOLTAGE DROP
V.	VOLTAGE/VOLTS
WP	WEATHERPROOF
WD.	WIDE
W/	WITH
W/O	WITHOUT
W/I	WROUGHT IRON

NOTE: NOT ALL SYMBOLS, NOTES, AND ABBREVIATIONS ARE USED

POWER

- EXISTING 208/120V BRANCH CIRCUIT PANELBOARD
- EXISTING 480/277V BRANCH CIRCUIT PANELBOARD
- T — TRANSFORMER
- M — MOTOR CONNECTION. NUMBER INDICATES HORSEPOWER
- UNFUSED DISCONNECT SWITCH. SIZE AS NOTED
- FUSED DISCONNECT SWITCH. SIZE AS NOTED
- COMBINATION DISCONNECT SWITCH AND MAGNETIC MOTOR CONTROLLER, SIZE AS NOTED
- J — FLUSH WALL JUNCTION BOX OR JUNCTION BOX ABOVE CEILING
- RECEPTACLE
- GFCI — GFCI RECEPTACLE
- TVSS — TRANSIENT VOLTAGE SURGE SUPPRESSOR RECEPTACLE
- EMERGENCY LIGHT WITH BATTERY BACKUP
- S — SINGLE–POLE SWITCH
- S_M — MOTOR STARTER SWITCH
- S_K — SINGLE–POLE KEYED SWITCH
- CAN LIGHT RECESSED
- L1–XX — CIRCUIT DESIGNATION
- X — DATA CONNECTION. SINGLE PORT UNLESS NOTED OTHERWISE INDICATES NUMBER OF PORTS

GENERAL

- DEMOLITION
- NEW WORK
- EXISTING
- CONTROL WIRING

ELECTRICAL DEMOLITION NOTES

A. ELECTRICAL EQUIPMENT TO BE REMOVED AS PER THIS CONTRACT. DISCONNECT CIRCUIT AND WIRING FROM EQUIPMENT WHICH IS TO BE REMOVED BY OTHERS. WIRING MADE OBSOLETE BY THE NEW CONSTRUCTION SHALL BE REMOVED. CONDUIT MADE OBSOLETE BY THE NEW CONSTRUCTION SHALL BE REMOVED OR SECURELY SEALED AND CAPPED ABOVE CEILINGS, BELOW FLOORS, GRADE OR IN WALLS SO THAT IT IS COMPLETELY CONCEALED AT THE COMPLETION OF THE PROJECT. PIPING AND WIRING REMOVED FROM THE EXISTING ELECTRICAL SYSTEMS SHALL NOT BE USED IN THE INSTALLATION OF THE NEW SYSTEMS.

B. DEMOLITION INCLUDES, BUT IS NOT LIMITED TO, REMOVAL AND LEGAL DISPOSAL OF EQUIPMENT AND SYSTEMS MADE OBSOLETE AND/OR REPLACED BY NEW WORK. DEMOLITION INCLUDES RELOCATION OR REINSTALLATION, DISCONNECTIONS AND RECONNECTIONS OF SERVICES, SUPPORTS, AND SUBSEQUENT FINAL SUPPORTS, TEMPORARY CAPPING, AND REROUTING OF TEMPORARY SERVICES TO PERMIT NEW OR RENOVATION WORK TO PROCEED.

C. THE DEMOLITION WORK INDICATED ON THE DRAWING IS INTENDED TO ASSIST THE CONTRACTOR AND GIVE GENERAL INFORMATION. NOT ALL DEMOLITION OR TEMPORARY CONNECTIONS ARE SHOWN. PRIOR TO SUBMITTING BID, THE CONTRACTOR SHALL VISIT THE PROJECT SITE AND REVIEW ORIGINAL DRAWINGS IF AVAILABLE. CONTRACTOR IS RESPONSIBLE TO DETERMINE THE FULL EXTENT OF DEMOLITION, AND INCLUDE ALL REQUIRED DEMOLITION WORK IN HIS BID, WHETHER OR NOT SPECIFICALLY SHOWN ON DRAWINGS. NO ADDITIONAL COST WILL BE GRANTED FOR DEMOLITION. LEGALLY DISPOSE OF ALL ITEMS AND MATERIALS, EXCEPT ANY ITEMS SPECIFICALLY DESIGNATED BY THE OWNER TO BE SALVAGED. REMOVE AND REPLACE THE DESIGNATED SALVAGED EQUIPMENT IN A LOCATION DIRECTED BY THE OWNER AT NO ADDITIONAL EXPENSE.

D. IN ALL AREAS WHERE PATCHING IS REQUIRED, THE CONTRACTOR SHALL PATCH THE SUBSURFACE WHERE THE NEW SURFACE IS TO BE FINISHED. A NEW FINISH WILL BE PROVIDED BY THE CONTRACTOR AND THE CONTRACTOR IS RESPONSIBLE TO PATCH THE SURROUNDING SURFACE TO MATCH EXISTING.

E. CONTRACTOR IS RESPONSIBLE FOR ALL REQUIRED CUTTING AND PATCHING OF EXISTING SURFACES. CONTRACTOR SHALL REMOVE/REPLACE EXISTING CEILING TILES AND GRID AS REQUIRED TO ACCOMPLISH INDICATED ELECTRICAL WORK, UNLESS SPECIFICALLY INDICATED OTHERWISE.

F. MAINTAIN CONTINUITY OF EXISTING CIRCUITS FOR EQUIPMENT AND DEVICES TO REMAIN. IF A DEVICE OR EQUIPMENT IS REMOVED AND IS PART OF AN EXISTING CIRCUIT TO REMAIN, THE CIRCUIT SHALL BE RESTORED TO IT'S ORIGINAL CONDITION.

GENERAL NOTES

1. NO LIVE ELECTRICAL WORK IS PERMITTED. REFER TO 01 00 00 GENERAL REQUIREMENTS SPECIFICATIONS SECTION 1.5, #2 AND #4.
2. ALL INSTALLATIONS SHALL MEET ALL REQUIREMENTS OF THE LATEST VERSION OF THE VA ELECTRICAL DESIGN MANUAL, NEC, AND NFPA 101.
3. ALL EXISTING PANELS THAT ARE NOT LABELED WITH AN AIC VALUE CONTRACTOR SHALL ASSUME 65k AIC FOR ADDING CIRCUIT BREAKERS TO PANELS

SPECIAL SYSTEMS (BMS) NOTES

1. FOR ALL SOLE SOURCED ITEMS: THE GENERAL CONTRACTOR SHALL BEAR ALL COSTS FOR ASSOCIATED WORK. CONTRACTOR SHALL PROVIDE A COMPLETE AND WORKING SYSTEM AT THE COMPLETION OF INSTALLATION.
2. THE INSTALLED SYSTEM SHALL BE COMPATIBLE WITH THE ASSOCIATED EXISTING SYSTEM ON THE BATAVIA VA CAMPUS. ALL SYSTEMS SHALL BE APPROVED BY THE VA COR AND SHALL MEET THE REQUIREMENTS OF THE VA DESIGN GUIDE AND NEC.
3. CONTRACTOR SHALL ENSURE A COMPLETE AND WORKING SYSTEM AT THE COMPLETION OF INSTALLATION AND SHALL PROVIDE SHOP DRAWINGS SHOWING ALL ENDPOINT DEVICES AND ASSOCIATED MATERIALS REQUIRED FOR THE INSTALLATION.
4. ALL WORK SHALL BE COORDINATED WITH THE VA COR.

BUILDING MANAGEMENT SYSTEM
VENDOR:
DAN FAES
U&S SERVICES
95 STARK STREET TONAWANDA, NY 14150
PHONE: 716–693–4490

Revisions:	Date:

CONSULTANT

ARCHITECT/ENGINEER OF RECORD

NEI NORTHEAST INFRASTRUCTURE, LLC
34 BROWN STREET
HONESDALE, PA 18431
OFFICE : (570) 253-0846
FAX : (570) 253-1935
WWW.NEINFRA.COM

STAMP

STATE OF NEW YORK · DAN L. ENGLEHART · 080021 · LICENSED PROFESSIONAL ENGINEER

Office of Construction and Facilities Management

VA U.S. Department of Veterans Affairs

Drawing Title	ELECTRICAL SYMBOLS, NOTES AND ABBREVIATIONS
Phase	CONSTRUCTION DOCUMENTS
Project Title	IMPROVE POTABLE WATER DISTRIBUTION SYSTEM
Project Number	528A4-16-205
Building Number	N/A
Approved: Project Director	VA NEW YORK HEALTHCARE SYSTEM
Location	222 RICHMOND AVENUE BATAVIA, NY 14020
Issue Date	06/08/2022
Checked	D.L.E.
Drawn	V.A.C.
Drawing Number	E-001

VA FORM 08 - 6231

6/14/2009 12:39:03 PM

File Path

KEY PLAN TAG	PANEL NAME	VOLTAGE	PHASE	AIC RATING	MANUFACTURER
1	PWP1 (EXISTING)	208/120V	3	22K	CUTLER–HAMMER
2	VAC (EXISTING)	208/120V	3	–	–
3	DP (EXISTING)	208/120V	3	22K	SIEMENS
4	EAST (EXISTING)	208/120V	3	22K	I–T–E

GENERAL NOTES:

1. SEE PLUMBING NEW WORK PLANS FOR ALL PLUMBING EQUIPMENT INSTALLATIONS.
2. ALL NEW CIRCUIT BREAKERS SHALL BE OF THE SAME MANUFACTURER AND HAVE AN AIC RATING EQUAL TO THE PANEL IN WHICH THEY ARE BEING INSTALLED.
3. CONTRACTOR SHALL COORDINATE SOURCE PANEL AND CIRCUIT NUMBER WITH THE VA COR.
4. WHERE ACCESSIBILITY IS LIMITED, CONTRACTOR SHALL PROVIDE SURFACE MOUNTED RECEPTACLES ON EXISTING WALLS. CONTRACTOR SHALL USE SURFACE METAL RACEWAY. SURFACE METAL RACEWAY SHALL BE PAINTED TO MATCH THE FINISH OF THE EXISTING WALL. ALL WORK SHALL BE APPROVED BY THE VA COR PRIOR TO INSTALLATIONS.
5. PROVIDE FLEXIBLE METAL CONDUIT FOR CONNECTIONS TO MOTORS AND OTHER ELECTRICAL EQUIPMENT SUBJECT TO MOVEMENT, VIBRATION, MISALIGNMENT, CRAMPED QUARTERS, OR NOISE TRANSMISSION. FLEXIBLE METAL CONDUIT SHALL BE NO LONGER THAN 6 FT IN LENGTH. PROVIDE LIQUID TIGHT FLEXIBLE METAL CONDUIT FOR INSTALLATION IN EXTERIOR LOCATIONS, MOISTURE OR HUMIDITY LADEN ATMOSPHERE, CORROSIVE ATMOSPHERE, WATER OR SPRAY WASH DOWN OPERATIONS, AND LOCATIONS SUBJECT TO SEEPAGE OR DRIPPING OF OIL, GREASE, OR WATER. LIQUID–TIGHT FLEXIBLE METAL CONDUIT SHALL BE NO LONGER THAN 6 FT IN LENGTH.
6. FOR ALL AREAS IN WHICH CONDUIT IS EXPOSED RGS CONDUIT SHALL BE INSTALLED. FOR ALL AREAS IN WHICH CONDUIT IS CONCEALED EMT IS ACCEPTABLE FOR INSTALLATION.

DEMOLITION KEYED NOTE:

1 REMOVE EXISTING COPPER SILVER IONIZATION UNIT, ALL ASSOCIATED ELECTRICAL WIRING, CONDUIT, BACK TO SOURCE PANEL

KEYED NOTES:

1. PROVIDE 30A MOTOR RATED SWITCH FOR ASSOCIATED MIXING VALVE STATION (SEE PLUMBING NEW WORK PLANS). COORDINATE FINAL LOCATION WITH WATER MONITORING PANEL INSTALLATION. PROVIDE 2–#12 CONDUCTORS AND 1–#12 GROUND FROM MOTOR RATED SWITCH TO WATER MONITORING PANEL IN 3/4" LIQUIDTIGHT FLEXIBLE METAL CONDUIT. MOTOR RATED SWITCH SHALL HAVE SOLID NEUTRAL. BASIS OF DESIGN SHALL BE SQUARE D 2510.
2. REMOVE EXISTING RECEPTACLE. PROVIDE HOSPITAL GRADE GFCI RECEPTACLE FOR BOTTLE FILLER (SEE PLUMBING NEW WORK PLANS). RECEPTACLES SHALL BE IVORY AND HAVE A STAINLESS–STEEL WALL PLATE COVER. (SEE PLUMBING NEW WORK PLANS). TIE INTO EXISTING CIRCUIT. EXISTING CONDUCTORS SHALL BE MEGGER TESTED TO ENSURE THEIR INTEGRITY PRIOR TO INSTALLATION OF THE NEW RECEPTACLE. IF THE INTEGRITY OF THE CONDUCTORS IS NOT ACCEPTABLE THEY SHALL THEN BE REMOVED AND NEW CONDUCTORS SHALL BE INSTALLED AS PER NEC REQUIREMENTS. PROVIDE 20A SINGLE POLE CIRCUIT BREAKER. PROVIDE 2–#12 CONDUCTORS AND 1–#12 GROUND IN 3/4" CONDUIT TO LOCAL PANELBOARD UNLESS NOTED OTHERWISE.
3. PROVIDE GFCI RECEPTACLE FOR ASSOCIATED BOTTLE FILLER.
4. WATER MONITORING PANEL. CONTRACTOR SHALL PROVIDE SHOP DRAWINGS SHOWING ALL ASSOCIATED ENDPOINT DEVICES AND MATERIALS REQUIRED FOR INSTALLATION TO ENSURE A COMPLETE AND WORKING SYSTEM. INCLUDING BUT NOT LIMITED TO SCHEMATIC WIRING DIAGRAM.
5. AS–P CONTROLLER AND BMS PANEL TO BE LOCATED WITHIN SINGLE CABINET. CONTRACTOR SHALL PROVIDE SHOP DRAWINGS SHOWING ALL ASSOCIATED ENDPOINT DEVICES AND MATERIALS REQUIRED FOR INSTALLATION TO ENSURE A COMPLETE AND WORKING SYSTEM. INCLUDING BUT NOT LIMITED TO SCHEMATIC WIRING DIAGRAM.

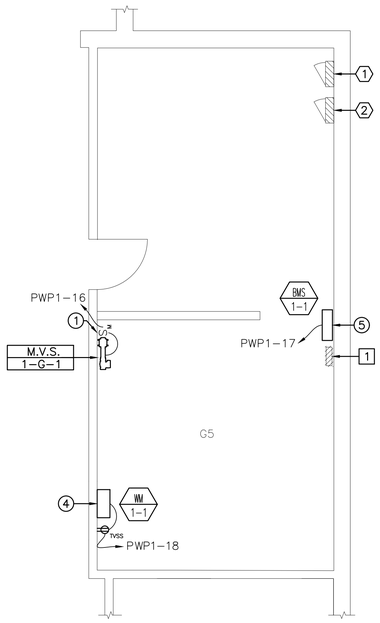

PROJECT NORTH — 1 / E–100 — BUILDING 1 GROUND FLOOR ROOM G5
SCALE: 1/4"=1'–0"

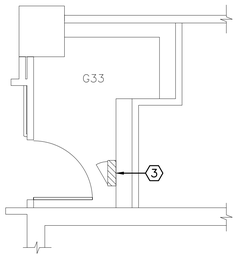

PROJECT NORTH — 2 / E–100 — BUILDING 1 GROUND FLOOR ROOM G33
SCALE: 1/4"=1'–0"

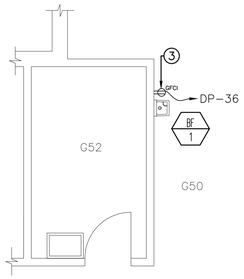

PROJECT NORTH — 3 / E–100 — BUILDING 1 GROUND FLOOR ROOM G50
SCALE: 1/4"=1'–0"

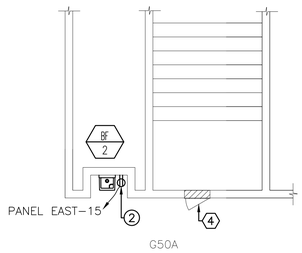

PROJECT NORTH — 4 / E–100 — BUILDING 1 GROUND FLOOR CORRIDOR G50A
SCALE: 1/4"=1'–0"

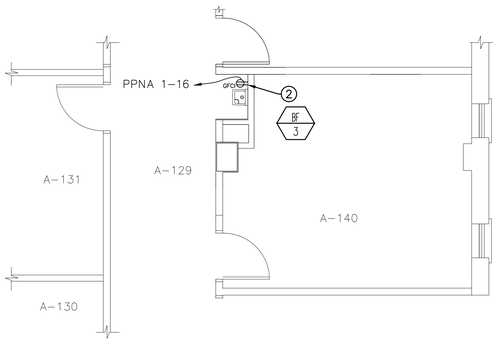

PROJECT NORTH — 5 / E–100 — BUILDING 1 FIRST FLOOR ROOM A–129
SCALE: 1/4"=1'–0"

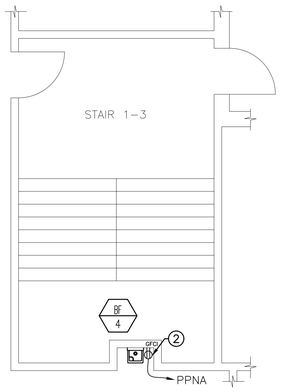

PROJECT NORTH — 6 / E–100 — BUILDING 1 FIRST FLOOR ROOM 146
SCALE: 1/4"=1'–0"

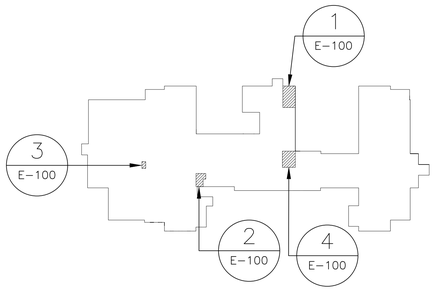

BUILDING 1 GROUND FLOOR KEY PLAN
SCALE: 1/64"=1'–0"

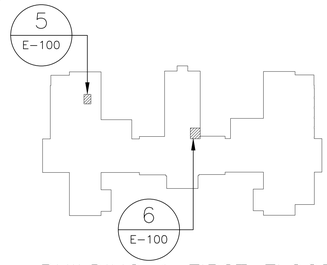

BUILDING 1 FIRST FLOOR KEY PLAN
SCALE: 1/64"=1'–0"

Revisions:	Date:

CONSULTANT

ARCHITECT/ENGINEER OF RECORD
NEI NORTHEAST INFRASTRUCTURE, LLC
34 BROWN STREET
HONESDALE, PA 18431
OFFICE : (570) 253-0846
FAX : (570) 253-1935
WWW.NEINFRA.COM

STAMP
STATE OF NEW YORK — DALE L. ENGLEHART — 090021 — LICENSED PROFESSIONAL ENGINEER

Office of Construction and Facilities Management
VA U.S. Department of Veterans Affairs

Drawing Title: BUILDING 1 ELECTRICAL PLANS 1
Phase: CONSTRUCTION DOCUMENTS
Project Title: IMPROVE POTABLE WATER DISTRIBUTION SYSTEM
Project Number: 528A4-16-205
Building Number: 1
Approved: Project Director: VA NEW YORK HEALTHCARE SYSTEM
Location: 222 RICHMOND AVENUE BATAVIA, NY 14020
Issue Date: 06/08/2022
Checked: D.L.E.
Drawn: V.A.C.
Drawing Number: E-100

VA FORM 08 - 6231
File Path
6/14/2019 12:39:03 PM

KEY PLAN TAG	PANEL NAME	VOLTAGE	PHASE	AIC RATING	MANUFACTURER
1	PB48TS–RT (EXISTING)	208/120V	3	–	–
2	PB48TS–LT (EXISTING)	208/120V	3	–	–
3	LP–B (EXISTING)	208/120V	3	22K	CUTLER–HAMMER
4	2LEL–1B (EXISTING)	208/120V	3	10K	EATON
5	PANEL 2 (EXISTING)	208/120V	3	10K	CUTLER–HAMMER
6	3NE2B (EXISTING)	208/120V	3	–	–
7	3NE1A (EXISTING)	208/120V	3	65K	CUTLER–HAMMER

GENERAL NOTES:

1. SEE PLUMBING NEW WORK PLANS FOR ALL PLUMBING EQUIPMENT INSTALLATIONS.
2. ALL PROVIDED CIRCUIT BREAKERS SHALL BE OF THE SAME MANUFACTURER AND HAVE AN AIC RATING EQUAL TO THE PANEL IN WHICH THEY ARE BEING INSTALLED.
3. CONTRACTOR SHALL COORDINATE SOURCE PANEL AND CIRCUIT NUMBER WITH THE VA COR.
4. WHERE ACCESSIBILITY IS LIMITED, CONTRACTOR SHALL PROVIDE SURFACE MOUNTED RECEPTACLES ON EXISTING WALLS. CONTRACTOR SHALL USE SURFACE METAL RACEWAY. SURFACE METAL RACEWAY SHALL BE PAINTED TO MATCH THE FINISH OF THE EXISTING WALL. ALL WORK SHALL BE APPROVED BY THE VA COR PRIOR TO INSTALLATIONS.
5. PROVIDE FLEXIBLE METAL CONDUIT FOR CONNECTIONS TO MOTORS AND OTHER ELECTRICAL EQUIPMENT SUBJECT TO MOVEMENT, VIBRATION, MISALIGNMENT, CRAMPED QUARTERS, OR NOISE TRANSMISSION. FLEXIBLE METAL CONDUIT SHALL BE NO LONGER THAN 6 FT IN LENGTH. PROVIDE LIQUID TIGHT FLEXIBLE METAL CONDUIT FOR INSTALLATION IN EXTERIOR LOCATIONS, MOISTURE OR HUMIDITY LADEN ATMOSPHERE, CORROSIVE ATMOSPHERE, WATER OR SPRAY WASH DOWN OPERATIONS, AND LOCATIONS SUBJECT TO SEEPAGE OR DRIPPING OF OIL, GREASE, OR WATER. LIQUID–TIGHT FLEXIBLE METAL CONDUIT SHALL BE NO LONGER THAN 6 FT IN LENGTH.
6. FOR ALL AREAS IN WHICH CONDUIT IS EXPOSED RGS CONDUIT SHALL BE INSTALLED. FOR ALL AREAS IN WHICH CONDUIT IS CONCEALED EMT IS ACCEPTABLE FOR INSTALLATION.

KEYED NOTES:

1. REMOVE EXISTING RECEPTACLE. PROVIDE HOSPITAL GRADE GFCI RECEPTACLE FOR BOTTLE FILLER (SEE PLUMBING NEW WORK PLANS). RECEPTACLES SHALL BE IVORY AND HAVE A STAINLESS–STEEL WALL PLATE COVER. (SEE PLUMBING NEW WORK PLANS). TIE INTO EXISTING CIRCUIT. EXISTING CONDUCTORS SHALL BE MEGGER TESTED TO ENSURE THEIR INTEGRITY PRIOR TO INSTALLATION OF THE NEW RECEPTACLE. IF THE INTEGRITY OF THE CONDUCTORS IS NOT ACCEPTABLE THEY SHALL THEN BE REMOVED AND NEW CONDUCTORS SHALL BE INSTALLED AS PER NEC REQUIREMENTS. PROVIDE 20A SINGLE POLE CIRCUIT BREAKER. PROVIDE 2–#12 CONDUCTORS AND 1–#12 GROUND IN 3/4" CONDUIT TO LOCAL PANELBOARD UNLESS NOTED OTHERWISE.
2. WATER MONITORING PANEL. CONTRACTOR SHALL PROVIDE SHOP DRAWINGS SHOWING ALL ASSOCIATED ENDPOINT DEVICES AND MATERIALS REQUIRED FOR INSTALLATION TO ENSURE A COMPLETE AND WORKING SYSTEM. INCLUDING BUT NOT LIMITED TO SCHEMATIC WIRING DIAGRAM.

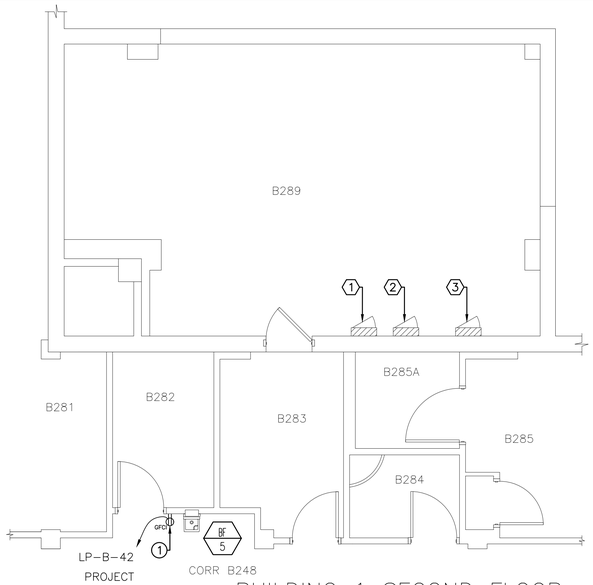

1 E–101 BUILDING 1 SECOND FLOOR CORRIDOR B248 & ROOM B289
SCALE: 1/4"=1'–0"

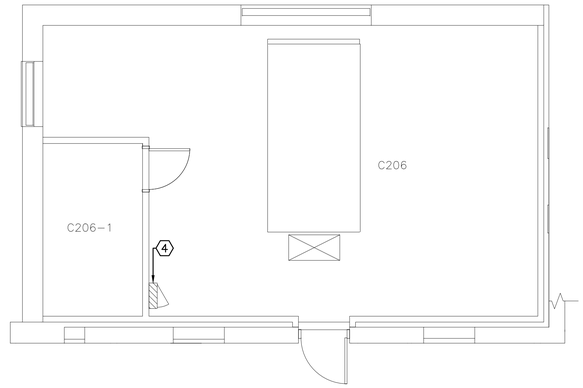

2 E–101 BUILDING 1 SECOND FLOOR MECHANICAL ROOM C206
SCALE: 1/4"=1'–0"

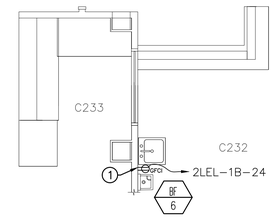

3 E–101 BUILDING 1 SECOND FLOOR ROOM C232
SCALE: 1/4"=1'–0"

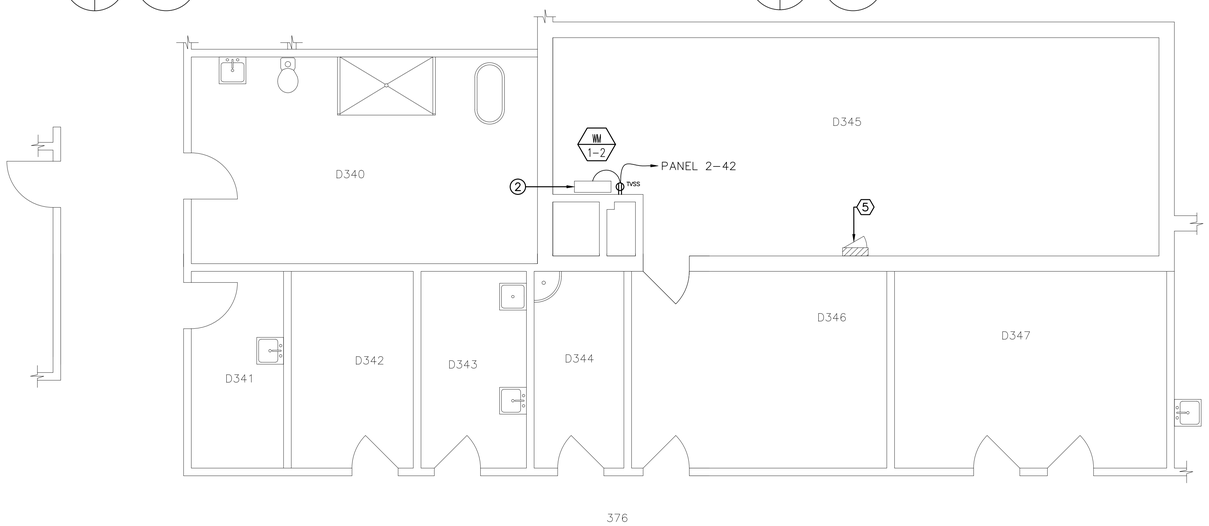

4 E–101 BUILDING 1 THIRD FLOOR ROOM D351 AND D345
SCALE: 1/4"=1'–0"

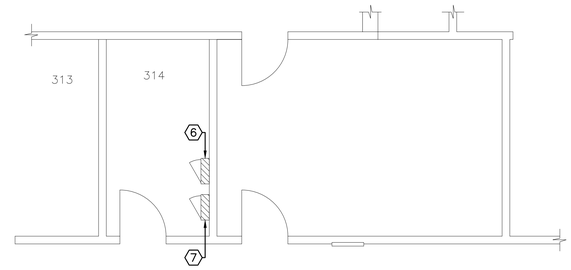

5 E–101 BUILDING 1 THIRD FLOOR CORRIDOR & ROOM 314
SCALE: 1/4"=1'–0"

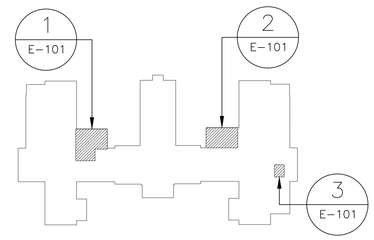

BUILDING 1 SECOND FLOOR KEY PLAN
SCALE: 1/64"=1'–0"

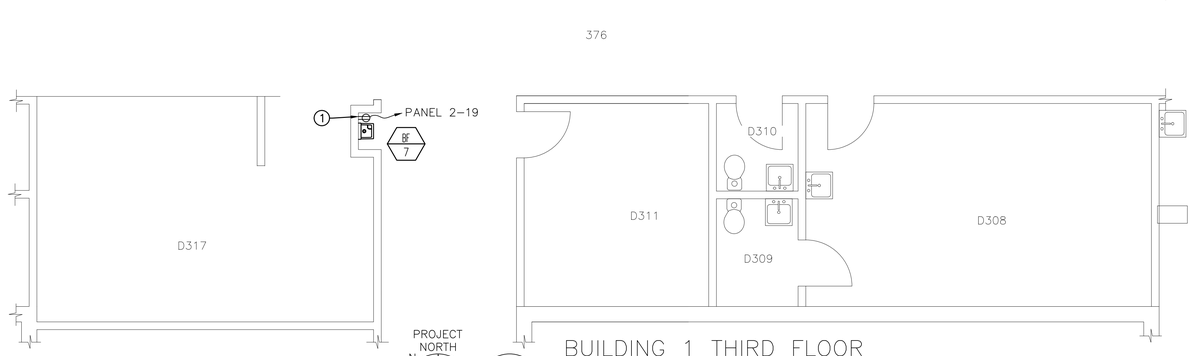

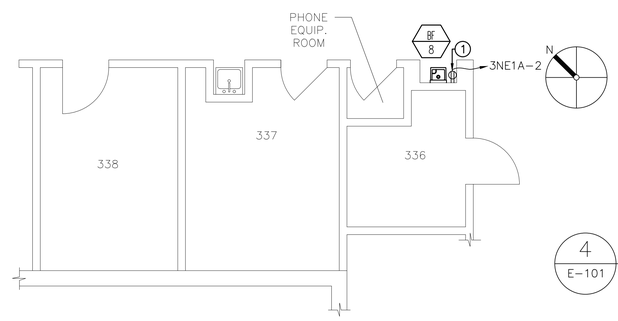

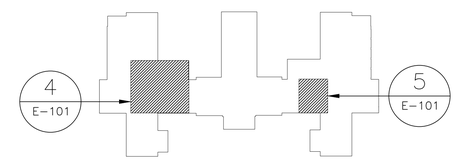

BUILDING 1 THIRD FLOOR KEY PLAN
SCALE: 1/64"=1'–0"

Revisions:	Date:

CONSULTANT

ARCHITECT/ENGINEER OF RECORD

NEI NORTHEAST INFRASTRUCTURE, LLC
34 BROWN STREET
HONESDALE, PA 18431
OFFICE : (570) 253-0846
FAX : (570) 253-1935
WWW.NEINFRA.COM

STAMP

STATE OF NEW YORK · DALE L. ENGELHART · 090021 · LICENSED PROFESSIONAL ENGINEER

Office of Construction and Facilities Management

VA U.S. Department of Veterans Affairs

Drawing Title: BUILDING 1 ELECTRICAL PLANS 2

Phase: CONSTRUCTION DOCUMENTS

Project Title: IMPROVE POTABLE WATER DISTRIBUTION SYSTEM

Project Number: 528A4-16-205

Building Number: 1

Approved: Project Director: VA NEW YORK HEALTHCARE SYSTEM

Location: 222 RICHMOND AVENUE BATAVIA, NY 14020

Issue Date: 06/08/2022 | Checked: D.L.E. | Drawn: V.A.C.

Drawing Number: E-101

File Path: 6/14/2009 12:39:03 PM

VA FORM 08 - 6231

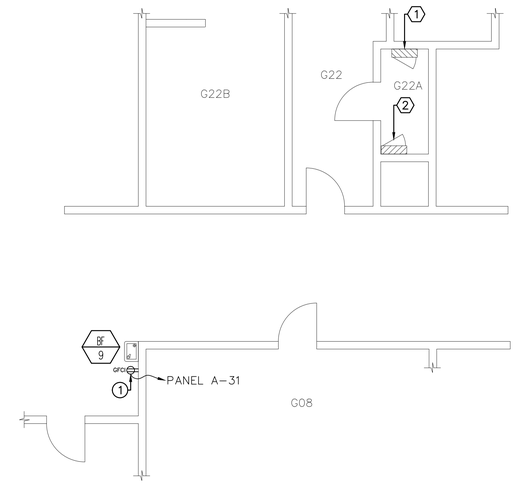

PROJECT NORTH

1 E-102 BUILDING 2 GROUND FLOOR CORRIDOR & ROOM G22A

SCALE: 1/4"=1'-0"

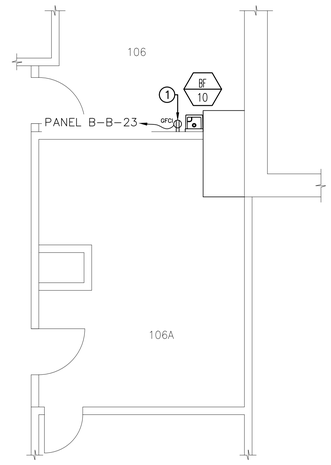

PROJECT NORTH

2 E-102 BUILDING 2 FIRST FLOOR ROOM 106

SCALE: 1/4"=1'-0"

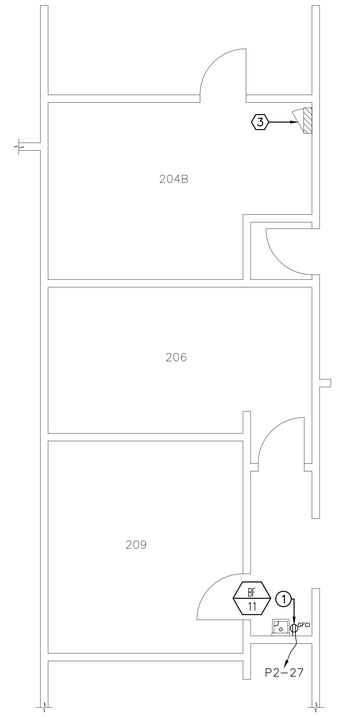

PROJECT NORTH

3 E-102 BUILDING 2 SECOND FLOOR CORRIDOR

SCALE: 1/4"=1'-0"

GENERAL NOTES:

1. WATER METERING/ALARM FINAL LOCATIONS AND CONNECTIONS SHALL BE FIELD COORDINATED AND APPROVED BY THE COR.
2. SEE PLUMBING NEW WORK PLANS FOR ALL PLUMBING EQUIPMENT INSTALLATIONS.
3. ALL PROVIDED CIRCUIT BREAKERS SHALL BE OF THE SAME MANUFACTURER AND HAVE AN AIC RATING EQUAL TO THE PANEL IN WHICH THEY ARE BEING INSTALLED.
4. CONTRACTOR SHALL COORDINATE SOURCE PANEL AND CIRCUIT NUMBER WITH THE VA COR.
5. WHERE ACCESSIBILITY IS LIMITED, CONTRACTOR SHALL PROVIDE SURFACE MOUNTED RECEPTACLES ON EXISTING WALLS. CONTRACTOR SHALL USE SURFACE METAL RACEWAY. SURFACE METAL RACEWAY SHALL BE PAINTED TO MATCH THE FINISH OF THE EXISTING WALL. ALL WORK SHALL BE APPROVED BY THE VA COR PRIOR TO INSTALLATIONS.
6. FOR ALL AREAS IN WHICH CONDUIT IS EXPOSED RGS CONDUIT SHALL BE INSTALLED. FOR ALL AREAS IN WHICH CONDUIT IS CONCEALED EMT IS ACCEPTABLE FOR INSTALLATION.

KEYED NOTE:

1. REMOVE EXISTING RECEPTACLE. PROVIDE HOSPITAL GRADE GFCI RECEPTACLE FOR BOTTLE FILLER (SEE PLUMBING NEW WORK PLANS). RECEPTACLES SHALL BE IVORY AND HAVE A STAINLESS-STEEL WALL PLATE COVER. (SEE PLUMBING NEW WORK PLANS). TIE INTO EXISTING CIRCUIT. EXISTING CONDUCTORS SHALL BE MEGGER TESTED TO ENSURE THEIR INTEGRITY PRIOR TO INSTALLATION OF THE NEW RECEPTACLE. IF THE INTEGRITY OF THE CONDUCTORS IS NOT ACCEPTABLE THEY SHALL THEN BE REMOVED AND NEW CONDUCTORS SHALL BE INSTALLED AS PER NEC REQUIREMENTS. PROVIDE 20A SINGLE POLE CIRCUIT BREAKER. PROVIDE 2-#12 CONDUCTORS AND 1-#12 GROUND IN 3/4" CONDUIT TO LOCAL PANELBOARD UNLESS NOTED OTHERWISE.

KEY PLAN TAG	PANEL NAME	VOLTAGE	PHASE	AIC RATING	MANUFACTURER
1	PANEL B (EXISTING)	208/120V	3	22K	CUTLER-HAMMER
2	PANEL A (EXISTING)	208/120V	3	22K	CUTLER-HAMMER
3	P2 (EXISTING)	208/120V	3	10K	CUTLER-HAMMER
4	P-A1 (EXISTING)	208/120V	3	100K	EATON
5	P-B (EXISTING)	208/120V	3	22K	EATON
6	ERP-1 (EXISTING)	208/120V	3	-	-
7	P-C (EXISTING)	208/120V	3	-	-
8	ERP-2 (EXISTING)	208/120V	3	10K	CUTLER-HAMMER

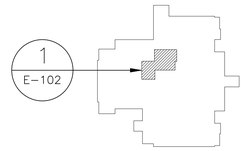

BUILDING 2 GROUND FLOOR KEY PLAN

SCALE: 1/64"=1'-0"

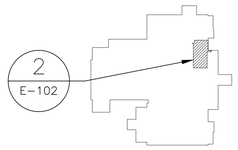

BUILDING 2 FIRST FLOOR KEY PLAN

SCALE: 1/64"=1'-0"

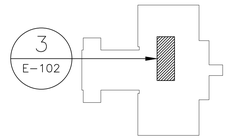

BUILDING 2 SECOND FLOOR KEY PLAN

SCALE: 1/64"=1'-0"

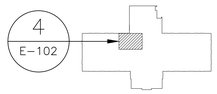

BUILDING 3 BASEMENT KEY PLAN

SCALE: 1/64"=1'-0"

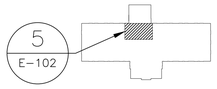

BUILDING 3 FIRST FLOOR KEY PLAN

SCALE: 1/64"=1'-0"

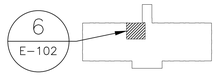

BUILDING 3 SECOND FLOOR KEY PLAN

SCALE: 1/64"=1'-0"

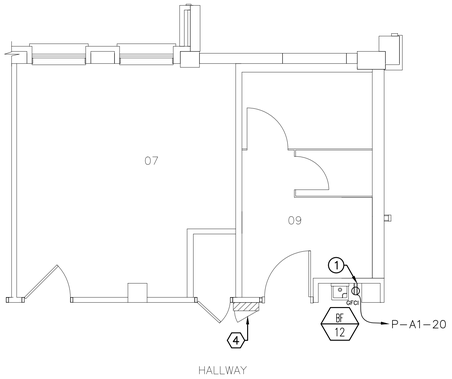

PROJECT NORTH

4 E-102 BUILDING 3 BASEMENT CORRIDOR

SCALE: 1/4"=1'-0"

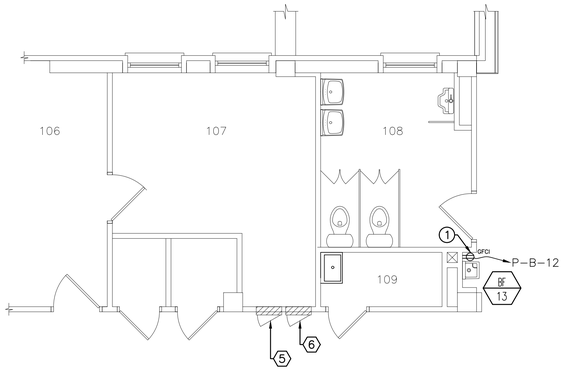

PROJECT NORTH

5 E-102 BUILDING 3 FIRST FLOOR CORRIDOR

SCALE: 1/4"=1'-0"

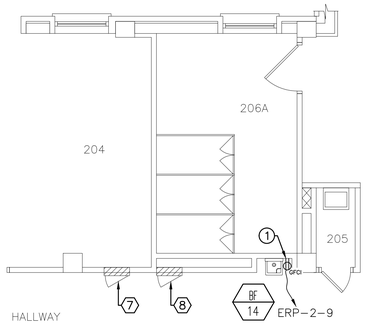

PROJECT NORTH

6 E-102 BUILDING 3 SECOND FLOOR CORRIDOR

SCALE: 1/4"=1'-0"

Revisions:	Date:

CONSULTANT

ARCHITECT/ENGINEER OF RECORD

NEI NORTHEAST INFRASTRUCTURE, LLC

34 BROWN STREET
HONESDALE, PA 18431

OFFICE : (570) 253-0846
FAX : (570) 253-1935
WWW.NEINFRA.COM

STAMP

STATE OF NEW YORK · DALE E. ENGELHART · 090021 · LICENSED PROFESSIONAL ENGINEER

Office of Construction and Facilities Management

VA U.S. Department of Veterans Affairs

Drawing Title: BUILDINGS 2 AND 3 ELECTRICAL PLANS

Phase: CONSTRUCTION DOCUMENTS

Project Title: IMPROVE POTABLE WATER DISTRIBUTION SYSTEM

Project Number: 528A4-16-205

Building Number: 2 & 3

Approved: Project Director: VA NEW YORK HEALTHCARE SYSTEM

Location: 222 RICHMOND AVENUE BATAVIA, NY 14020

Issue Date: 06/08/2022 | Checked: D.L.E. | Drawn: V.A.C.

Drawing Number: E-102

File Path

6/14/2009 12:39:03 PM

VA FORM 08 - 6231

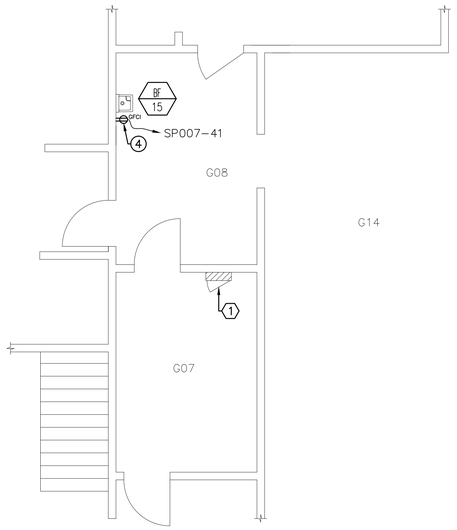

PROJECT NORTH

1 E-103 BUILDING 4 GROUND FLOOR ROOM G14, G08 & G07

SCALE: 1/4"=1'-0"

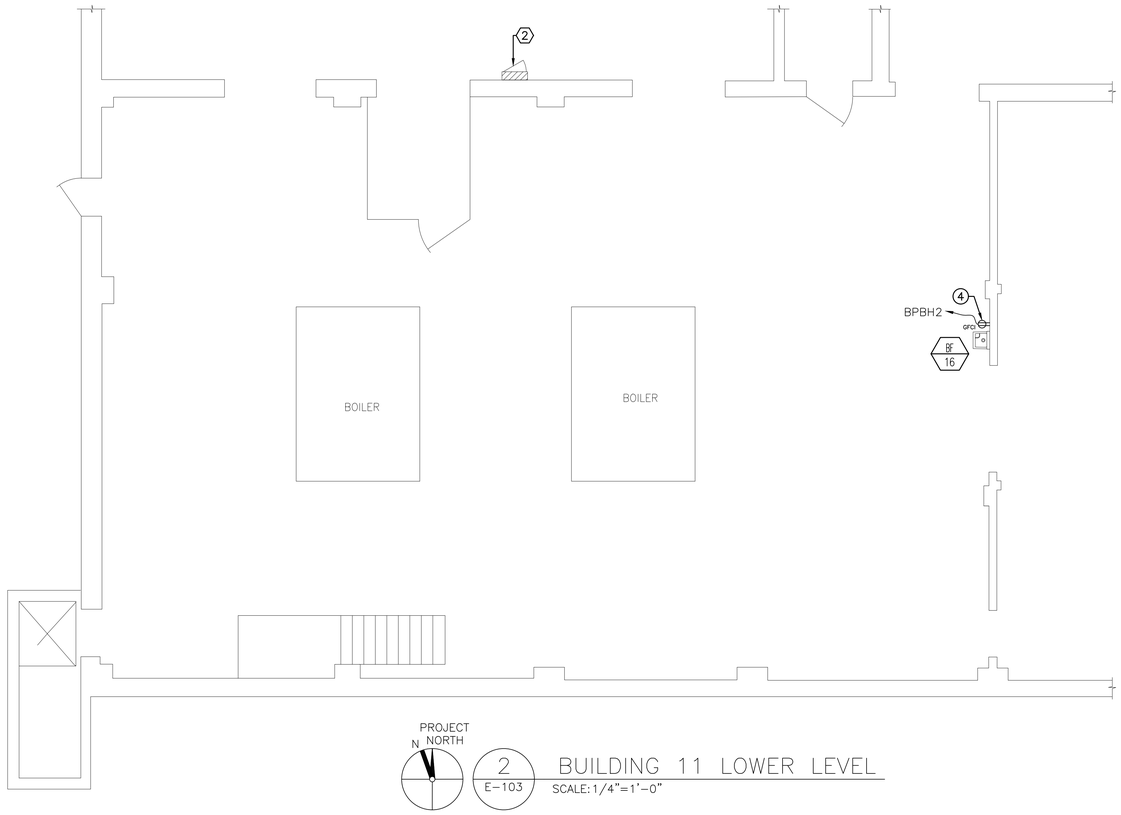

PROJECT NORTH

2 E-103 BUILDING 11 LOWER LEVEL

SCALE: 1/4"=1'-0"

GENERAL NOTES:

1. WATER METERING/ALARM FINAL LOCATIONS AND CONNECTIONS SHALL BE FIELD COORDINATED AND APPROVED BY THE COR.
2. SEE PLUMBING NEW WORK PLANS FOR ALL PLUMBING EQUIPMENT INSTALLATIONS.
3. ALL PROVIDED CIRCUIT BREAKERS SHALL BE OF THE SAME MANUFACTURER AND HAVE AN AIC RATING EQUAL TO THE PANEL IN WHICH THEY ARE BEING INSTALLED.
4. CONTRACTOR SHALL COORDINATE SOURCE PANEL AND CIRCUIT NUMBER WITH THE VA COR.
5. WHERE ACCESSIBILITY IS LIMITED, CONTRACTOR SHALL PROVIDE SURFACE MOUNTED RECEPTACLES ON EXISTING WALLS. CONTRACTOR SHALL USE SURFACE METAL RACEWAY. SURFACE METAL RACEWAY SHALL BE PAINTED TO MATCH THE FINISH OF THE EXISTING WALL. ALL WORK SHALL BE APPROVED BY THE VA COR PRIOR TO INSTALLATIONS.
6. PROVIDE FLEXIBLE METAL CONDUIT FOR CONNECTIONS TO MOTORS AND OTHER ELECTRICAL EQUIPMENT SUBJECT TO MOVEMENT, VIBRATION, MISALIGNMENT, CRAMPED QUARTERS, OR NOISE TRANSMISSION. FLEXIBLE METAL CONDUIT SHALL BE NO LONGER THAN 6 FT IN LENGTH. PROVIDE LIQUID TIGHT FLEXIBLE METAL CONDUIT FOR INSTALLATION IN EXTERIOR LOCATIONS, MOISTURE OR HUMIDITY LADEN ATMOSPHERE, CORROSIVE ATMOSPHERE, WATER OR SPRAY WASH DOWN OPERATIONS, AND LOCATIONS SUBJECT TO SEEPAGE OR DRIPPING OF OIL, GREASE, OR WATER. LIQUID-TIGHT FLEXIBLE METAL CONDUIT SHALL BE NO LONGER THAN 6 FT IN LENGTH.
7. FOR ALL AREAS IN WHICH CONDUIT IS EXPOSED RGS CONDUIT SHALL BE INSTALLED. FOR ALL AREAS IN WHICH CONDUIT IS CONCEALED EMT IS ACCEPTABLE FOR INSTALLATION.

KEYED NOTES:

1. PROVIDE 30A MOTOR RATED SWITCH FOR ASSOCIATED MIXING VALVE STATION (SEE PLUMBING NEW WORK PLANS). PROVIDE 20A SINGLE POLE CIRCUIT BREAKER. COORDINATE FINAL LOCATION WITH WATER MONITORING PANEL INSTALLATION. PROVIDE 2-#12 CONDUCTORS AND 1-#12 GROUND FROM MOTOR RATED SWITCH TO WATER MONITORING PANEL IN 3/4" LIQUIDTIGHT FLEXIBLE METAL CONDUIT. MOTOR RATED SWITCH SHALL HAVE SOLID NEUTRAL. BASIS OF DESIGN SHALL BE SQUARE D 2510.
2. WATER MONITORING PANEL. CONTRACTOR SHALL PROVIDE SHOP DRAWINGS SHOWING ALL ASSOCIATED ENDPOINT DEVICES AND MATERIALS REQUIRED FOR INSTALLATION TO ENSURE A COMPLETE AND WORKING SYSTEM. INCLUDING BUT NOT LIMITED TO SCHEMATIC WIRING DIAGRAM.
3. EXISTING BMS PANEL.
4. REMOVE EXISTING RECEPTACLE. PROVIDE HOSPITAL GRADE GFCI RECEPTACLE FOR BOTTLE FILLER (SEE PLUMBING NEW WORK PLANS). RECEPTACLES SHALL BE IVORY AND HAVE A STAINLESS-STEEL WALL PLATE COVER. (SEE PLUMBING NEW WORK PLANS). TIE INTO EXISTING CIRCUIT. EXISTING CONDUCTORS SHALL BE MEGGER TESTED TO ENSURE THEIR INTEGRITY PRIOR TO INSTALLATION OF THE NEW RECEPTACLE. IF THE INTEGRITY OF THE CONDUCTORS IS NOT ACCEPTABLE THEY SHALL THEN BE REMOVED AND NEW CONDUCTORS SHALL BE INSTALLED AS PER NEC REQUIREMENTS. PROVIDE 20A SINGLE POLE CIRCUIT BREAKER. PROVIDE 2-#12 CONDUCTORS AND 1-#12 GROUND IN 3/4" CONDUIT TO LOCAL PANELBOARD UNLESS NOTED OTHERWISE.

KEY PLAN TAG	PANEL NAME	VOLTAGE	PHASE	AIC RATING	MANUFACTURER
1	SP007 (EXISTING)	208/120V	3	22K	CUTLER-HAMMER
2	BPBH2 (EXISTING)	208/120V	3	22K	–
3	BPNL1 (EXISTING)	208/120V	3	–	–
4	BPCL1-SEC 1 (EXISTING)	208/120V	3	10K	EATON
5	BPCL1-SEC 2 (EXISTING)	208/120V	3	–	–
6	BLSL1 (EXISTING)	208/120V	3	–	–
7	1PCL-1 (EXISTING)	208/120V	3	–	–
8	1PCL-1 SECTION 2 (EXISTING)	208/120V	3	10K	EATON

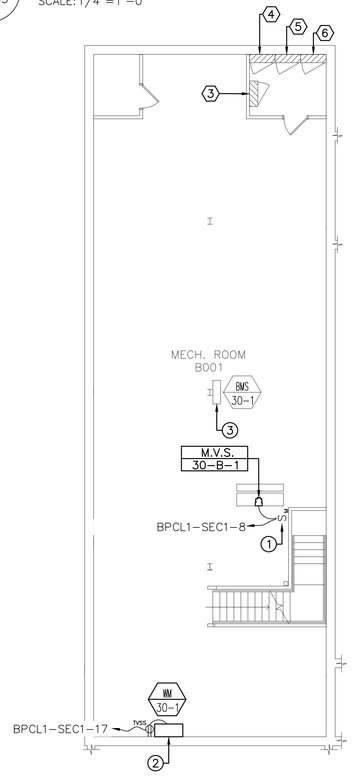

PROJECT NORTH

3 E-103 BUILDING 30 BASEMENT/CRAWLSPACE

SCALE: 1/4"=1'-0"

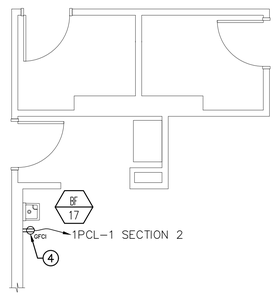

PROJECT NORTH

4 E-103 BUILDING 30 FIRST FLOOR

SCALE: 1/4"=1'-0"

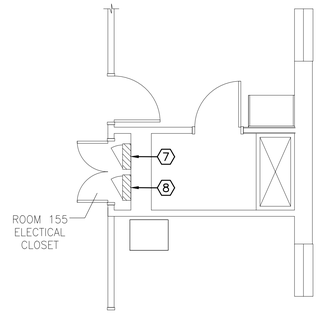

PROJECT NORTH

5 E-103 BUILDING 30 FIRST FLOOR

SCALE: 1/4"=1'-0"

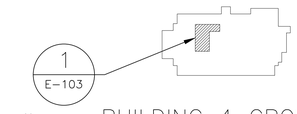

BUILDING 4 GROUND FLOOR KEY PLAN

SCALE: 1/64"=1'-0"

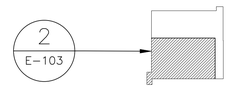

BUILDING 11 LOWER FLOOR KEY PLAN

SCALE: 1/64"=1'-0"

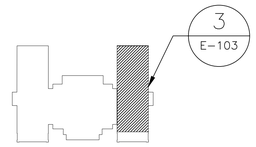

BUILDING 30 BASEMENT KEY PLAN

SCALE: 1/64"=1'-0"

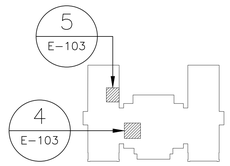

BUILDING 30 FIRST FLOOR KEY PLAN

SCALE: 1/64"=1'-0"

Revisions:	Date:

CONSULTANT

ARCHITECT/ENGINEER OF RECORD

NEI NORTHEAST INFRASTRUCTURE, LLC

34 BROWN STREET
HONESDALE, PA 18431
OFFICE : (570) 253-0846
FAX : (570) 253-1935
WWW.NEINFRA.COM

STAMP

STATE OF NEW YORK · DALE L. ENGLEBRIGHT · 090021 · LICENSED PROFESSIONAL ENGINEER

Office of Construction and Facilities Management

VA U.S. Department of Veterans Affairs

Drawing Title: BUILDINGS 4, 11, AND 30 ELECTRICAL PLANS

Phase: CONSTRUCTION DOCUMENTS

Project Title: IMPROVE POTABLE WATER DISTRIBUTION SYSTEM

Project Number: 528A4-16-205

Building Number: 4, 11, & 30

Approved: Project Director: VA NEW YORK HEALTHCARE SYSTEM

Location: 222 RICHMOND AVENUE BATAVIA, NY 14020

Issue Date: 06/08/2022 | Checked: D.L.E. | Drawn: V.A.C.

Drawing Number: E-103

File Path: G:\4\2\09 12:39:03 PM

VA FORM 08 - 6231

PANELBOARD SCHEDULE

DESIGNATION: PWP1 (EXISTING)
BUS: 100A
MAIN: 100A MCB
MANUFACTURER: CUTLER HAMMER
VOLTAGE: 208 / 120 V 3ϕ 4W
INTERRUPTING RATING: EXISTING
ENCLOSURE: EXISTING
LOCATION: ROOM G5
FED BY: CEDP
MOUNTING: SURFACE

CKT NO	POLE	TRIP	WIRE	G	CONDUIT	LOAD	KVA ~ A		KVA ~ B		KVA ~ C		LOAD	CONDUIT	G	WIRE	TRIP	POLE	CKT NO	
1	1	–	–	–	–	SPARE	–	–											2	
3	1	–	–	–	–	SPARE			–	–			POWEREX COMPRESSOR	–	–	–	100	3	4	
5	1	–	–	–	–	BACKFLOW PREVENTERS					–	–							6	
7	1	–	–	–	–	SPARE	–	–					EXISTING	–	–	–	–	1	8	
9	1	–	–	–	–	DRY SPRINKLER PRESS PUMP			–	–			EXISTING	–	–	–	–	1	10	
11	1	–	–	–	–	WIRELESS GATEWAY					–	–	WATER METER	–	–	–	–	1	12	
13	1	–	–	–	–	METER DEDICATED RECEP	–	–					B1 & B2 WATER HEATER	–	–	–	–	1	14	
15	1	–	–	–	–	FP BACKFLOW PREVENTER			–	0.36			M.V.S. 1–G–1	3/4"	12	12	20	1	16	(1)
(1) 17	1	20	12	12	3/4"	BMS PANEL/AS–P CONTROLLER					0.18	0.18	WM 1–1	3/4"	12	12	20	1	18	(1)
						ADDITIONAL KVA PER PHASE	–		0.36000		0.36000									

PANELBOARD NOTE:

(1) PROVIDE CIRCUIT BREAKER.

ADDITIONAL CONNECTED KVA: 0.720000
ADDITIONAL CONNECTED AMPERES: 1.998520

PANELBOARD SCHEDULE

DESIGNATION: PANEL DP (EXISTING)
BUS: 250A
MAIN: MCB 200A
BASIS OF DESIGN: SIEMENS S1
VOLTAGE: 208 / 120 V 3ϕ 4W
INTERRUPTING RATING: 22K
ENCLOSURE: NEMA 1
LOCATION: BLDG 1–ROOM G33
FED BY: MDP–N–9
MOUNTING: FLUSH

CKT NO	POLE	TRIP	WIRE	G	CONDUIT	LOAD	KVA ~ A		KVA ~ B		KVA ~ C		LOAD	CONDUIT	G	WIRE	TRIP	POLE	CKT NO	
1	1	–	–	–	–	EXAM ROOM 05 RECEPTS	–	–					RM G48. G47 RECEPTS	–	–	–	–	1	2	
3	1					RM G42, G43 RECEPTS			–	–			RM 20 RECEPTS	–	–	–	–	1	4	
5	1	–	–	–	–	RM. G44, G41 RECEPTS OUTPATIENT AREA					–	–	RM 19 RECEPTS	–	–	–	–	1	6	
7	1	–	–	–	–	RM. G37 RECEPTS		–					RM 15 RECEPTS	–	–	–	–	1	8	
9	1	–	–	–	–	RM G44, G50D, G50C, G35, G36 RECEPTS			–	–			RM G33 RECEPTS	–	–	–	–	1	10	
11	1	–	–	–	–	RM. G50 WIATING AREA OUTLETS PILLARS					–	–	RM G55 RECEPTS	–	–	–	–	1	12	
13	1					WORK STATIONS RM 03 RECEPTS	–	–											14	
15	1					WORK STATIONS RM 03 RECEPTS			–	–			90 AMP ELEC. DUCT HEAT	–	–	–	–	3	16	
17	1	–	–	–	–	EXAM ROOM 09 RECEPTS					–	–							18	
19	1	–	–	–	–	FEED TO RM 31 LIGHTS IN CEILING BOX	–	–					A/C ROOFTOP RECEPT	–	–	–	–	1	20	
21	2					FOLDING DOOR MOTOR CORRIDOR SWING MOTOR			–	–			ADMISSIONS RECEPT	–	–	–	–	1	22	
23											–	–	SPARE	–	–	–	–	1	24	
25	2	–	–	–	–	G36 BASEBOARD HEATER	–	–					CORRIDOR 08.16 RECEPTS	–	–	–	–	1	26	
27									–	–			LIGHTS RM G55	–	–	–	–	1	28	
29	1	–	–	–	–	SPARE					–	–	SPARE	–	–	–	–	1	30	
31	1	–	–	–	–	CANOPY LIGHTS FRONT ENT.	–	–					SPARE	–	–	–	–	2	32	
33	1	–	–	–	–	PORCH LIGHT			–	–									34	
35	1	–	–	–	–	RECEPT. BELOW THIS PANEL					–	0.18	BOTTLE FILLER RECEP ROOM G50	3/4"	12	12	20	1	36	(1)
37	3	–	–	–	–	EXHAUST FAN ROOM 03	–	–					SPARE	–	–	–	–	1	38	
39									–	–			OUTPATIENT AIR UNIT	–	–	–	–	2	40	
41											–	–							42	
						ADDITIONAL KVA PER PHASE	–		–		0.18									

PANELBOARD NOTE:

(1) PROVIDE CIRCUIT BREAKER.

ADDITIONAL CONNECTED KVA: 0.18
ADDITIONAL CONNECTED AMPERES: 0.50

PANELBOARD SCHEDULE

DESIGNATION: PANEL 2 (EXISTING)
BUS: 225A
MAIN: MCB 225A
BASIS OF DESIGN: CUTLER–HAMMER CC3325
VOLTAGE: 208 / 120 V 3ϕ 4W
INTERRUPTING RATING: 10K
ENCLOSURE: NEMA 1
LOCATION: BLDG 1–ROOM G33
FED BY: MDP–N–9
MOUNTING: FLUSH

CKT NO	POLE	TRIP	WIRE	G	CONDUIT	LOAD	KVA ~ A		KVA ~ B		KVA ~ C		LOAD	CONDUIT	G	WIRE	TRIP	POLE	CKT NO	
1	1	–	–	–	–	EXISTING	–	–					EXISTING	–	–	–	–	1	2	
3	1	–	–	–	–	EXISTING			–	–			EXISTING	–	–	–	–	1	4	
5	1	–	–	–	–	EXISTING					–	–	EXISTING	–	–	–	–	1	6	
7	1	–	–	–	–	EXISTING		–					EXISTING	–	–	–	–	1	8	
9	1	–	–	–	–	EXISTING			–	–			EXISTING	–	–	–	–	1	10	
11	1	–	–	–	–	EXISTING					–	–	EXISTING	–	–	–	–	1	12	
13	1	–	–	–	–	EXISTING	–	–					EXISTING	–	–	–	–	1	14	
15	1	–	–	–	–	EXISTING			–	–			EXISTING	–	–	–	–	1	16	
17	1	–	–	–	–	EXISTING					–	–	EXISTING	–	–	–	–	1	18	
19	1	–	–	–	–	EXISTING	–	–					EXISTING	–	–	–	–	1	20	
21	1	–	–	–	–	EXISTING			–	–			EXISTING	–	–	–	–	1	22	
23	1	–	–	–	–	EXISTING					–	–	EXISTING	–	–	–	–	1	24	
25	1	–	–	–	–	EXISTING	–	–					EXISTING	–	–	–	–	1	26	
27	1	–	–	–	–	EXISTING			–	–			EXISTING	–	–	–	–	1	28	
29	1	–	–	–	–	EXISTING					–	–	EXISTING	–	–	–	–	1	30	
31	1	–	–	–	–	EXISTING	–	–					EXISTING	–	–	–	–	1	32	
33	1	–	–	–	–	EXISTING			–	–			EXISTING	–	–	–	–	1	34	
35	1	–	–	–	–	EXISTING					–	–	EXISTING	–	–	–	–	1	36	
37	1	–	–	–	–	EXISTING	–	–					EXISTING	–	–	–	–	1	38	
39	1	–	–	–	–	EXISTING			–	–			EXISTING	–	–	–	–	1	40	
41	1	–	–	–	–	EXISTING					–	0.18	WM 1–2	3/4"	12	12	20	1	42	(1)
						ADDITIONAL KVA PER PHASE	–		–		0.18									

PANELBOARD NOTE:

(1) PROVIDE CIRCUIT BREAKER.

ADDITIONAL CONNECTED KVA: 0.18
ADDITIONAL CONNECTED AMPERES: 0.50

PANELBOARD SCHEDULE

DESIGNATION: BPCL1 SEC1
BUS: 225A
MAIN: 225A
BASIS OF DESIGN: NQ
VOLTAGE: 208 / 120 V 3ϕ 4W
INTERRUPTING RATING: MEET OR EXCEED SOURCE PANEL
ENCLOSURE: NEMA 3R
LOCATION: TBD
FED BY: TBD
MOUNTING: SURFACE

CKT NO	POLE	TRIP	WIRE	G	CONDUIT	LOAD	KVA ~ A		KVA ~ B		KVA ~ C		LOAD	CONDUIT	G	WIRE	TRIP	POLE	CKT NO	
1	1	–	–	–	–		–	–					ACCU	–	–	–	–	–	2	
3	1	–	–	–	–	SURGE SUPPRESSOR			–	–				–	–	–	–	–	4	
5	1	–	–	–	–						–	–	SPARE	–	–	–	–	–	6	
7	1	–	–	–	–	SPARE	–	0.36					MVS 30–B–1	3/4"	12	12	20	1	8	(1)
9	1	–	–	–	–	SPARE			–	–			SPARE	–	–	–	–	1	10	
11	1	–	–	–	–	SPARE					–	–	SPARE	–	–	–	–	1	12	
13	1	–	–	–	–	SERVICE RECEPTACLE	–	–					SPARE	–	–	–	–	1	14	
15	1	–	–	–	–	NURSE CALL			–	–			SPARE	–	–	–	–	1	16	
(1) 17	1	20	12	12	3/4"	WM 30–1					0.18	–	SPARE	–	–	–	–	1	18	
19	1	–	–	–	–	CONDENSATE PUMP	–	–					RETURN FAN	–	–	–	–	1	20	
21	1	–	–	–	–				–	–				–	–	–	–	1	22	
23	1	–	–	–	–						–	–		–	–	–	–	1	24	
						ADDITIONAL KVA PER PHASE	0.360000		–		0.180000									

PANELBOARD NOTE:

(1) PROVIDE CIRCUIT BREAKER.

ADDITIONAL CONNECTED KVA: 0.540000
ADDITIONAL CONNECTED AMPERES: 1.498890

PANELBOARD SCHEDULE

DESIGNATION: LP–B (EXISTING)
BUS: 225A
MAIN: MCB
BASIS OF DESIGN: CUTLER HAMMER PRL1A
VOLTAGE: 208 / 120 V 3ϕ 4W
INTERRUPTING RATING: 22K
ENCLOSURE: EXISTING
LOCATION: BLDG 1– RM B289
FED BY: SS–1–4
MOUNTING: SURFACE

CKT NO	POLE	TRIP	WIRE	G	CONDUIT	LOAD	KVA ~ A		KVA ~ B		KVA ~ C		LOAD	CONDUIT	G	WIRE	TRIP	POLE	CKT NO	
1	1	–	–	–	–	EXISTING	–	–					EXISTING	–	–	–	–	1	2	
3	1	–	–	–	–	EXISTING			–	–			EXISTING	–	–	–	–	1	4	
5	1	–	–	–	–	EXISTING					–	–	EXISTING	–	–	–	–	1	6	
7	1	–	–	–	–	EXISTING	–	–					EXISTING	–	–	–	–	1	8	
9	2	–	–	–	–	EXISTING			–	–			EXISTING	–	–	–	–	1	10	
11											–	–	EXISTING	–	–	–	–	3	12	
13	1	–	–	–	–	EXISTING	–	–											14	
15	1	–	–	–	–	EXISTING			–	–									16	
17	3	–	–	–	–	EXISTING					–	–	EXISTING	–	–	–	–	3	18	
19							–	–											20	
21									–	–									22	
23	3	–	–	–	–	EXISTING					–	–	EXISTING	–	–	–	–	2	24	
25							–	–											26	
27									–	–			EXISTING	–	–	–	–	1	28	
29	1	–	–	–	–	EXISTING					–	–	EXISTING	–	–	–	–	1	30	
31	1	–	–	–	–	EXISTING	–	–					EXISTING	–	–	–	–	1	32	
33	1	–	–	–	–	EXISTING			–	–			EXISTING	–	–	–	–	1	34	
35	1	–	–	–	–	EXISTING					–	–	EXISTING	–	–	–	–	1	36	
37	1	–	–	–	–	EXISTING	–	–					EXISTING	–	–	–	–	1	38	
39	1	–	–	–	–	EXISTING			–	–			EXISTING	–	–	–	–	1	40	
41	1	–	–	–	–	EXISTING					–	0.18	BOTTLE FILLER RECEP CORR B428	3/4"	12	12	20	1	42	(1)
						ADDITIONAL KVA PER PHASE	–		–		0.180000									

PANELBOARD NOTE:

(1) PROVIDE CIRCUIT BREAKER.

ADDITIONAL CONNECTED KVA: 0.180000
ADDITIONAL CONNECTED AMPERES: 0.499630

GENERAL NOTE:

1. CIRCUIT BREAKERS INSTALLED IN EXISTING PANELBOARDS SHALL BE OF THE SAME MANUFACTURER AND MODEL AS THE EXISTING PANELBOARDS. CONTRACTOR SHALL PROVIDE SHOP DRAWINGS FOR ALL PROVIDED CIRCUIT BREAKERS AND VERIFICATION OF THE PANELBOARDS IN WHICH THEY ARE TO BE INSTALLED. AIC RATING SHALL MEET OR EXCEED THE EXISTING PANELBOARD RATING. SEE ASSOCIATED PANELBOARD SCHEDULE.

6/14/2009 12:39:03 PM

Revisions:	Date:

CONSULTANT

ARCHITECT/ENGINEER OF RECORD

NEI NORTHEAST INFRASTRUCTURE, LLC
34 BROWN STREET
HONESDALE, PA 18431
OFFICE : (570) 253-0846
FAX : (570) 253-1935
WWW.NEINFRA.COM

STAMP

STATE OF NEW YORK · DALE E. ENGELHART · 090021 · LICENSED PROFESSIONAL ENGINEER

Office of Construction and Facilities Management

VA U.S. Department of Veterans Affairs

Drawing Title: ELECTRICAL PANELBOARD SCHEDULES
Phase: CONSTRUCTION DOCUMENTS
Project Title: IMPROVE POTABLE WATER DISTRIBUTION SYSTEM
Project Number: 528A4-16-205
Building Number: N/A
Approved: Project Director: VA NEW YORK HEALTHCARE SYSTEM
Location: 222 RICHMOND AVENUE BATAVIA, NY 14020
Issue Date: 06/08/2022
Checked: D.L.E.
Drawn: E.G.W.
Drawing Number: E-104

File Path:

VA FORM 08 - 6231

GENERAL NOTE:

1. ALL DETAILS ARE ASSOCIATED WITH ELECTRICAL (E SERIES) AND SPECIAL SYSTEMS (EY SERIES) DRAWINGS.

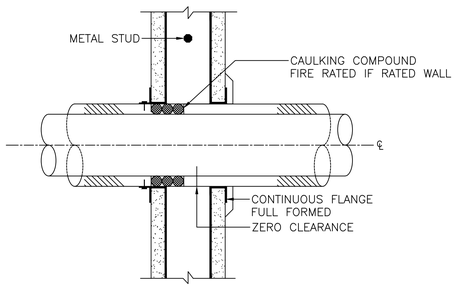

1 / E-500 PIPE SLEEVE THROUGH WALL DETAIL

SCALE: N.T.S.

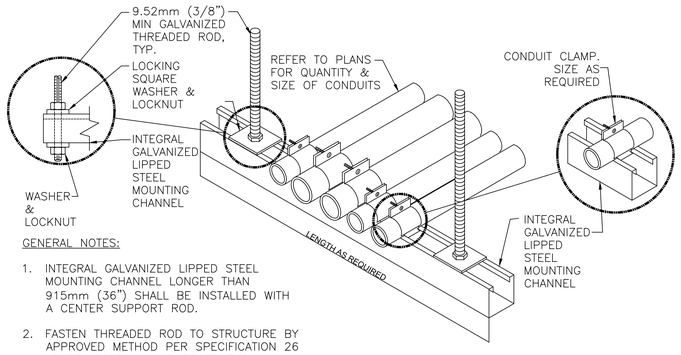

GENERAL NOTES:

1. INTEGRAL GALVANIZED LIPPED STEEL MOUNTING CHANNEL LONGER THAN 915mm (36") SHALL BE INSTALLED WITH A CENTER SUPPORT ROD.

2. FASTEN THREADED ROD TO STRUCTURE BY APPROVED METHOD PER SPECIFICATION 26 05 33, RACEWAY AND BOXES FOR ELECTRICAL SYSTEMS. FIELD VERIFY EXACT CONDITIONS.

2 / E-500 TYPICAL CONDUIT TRAPEZE MOUNTING DETAIL

SCALE: N.T.S.

Revisions:	Date:

CONSULTANT

ARCHITECT/ENGINEER OF RECORD

NEI NORTHEAST INFRASTRUCTURE, LLC
34 BROWN STREET
HONESDALE, PA 18431
OFFICE : (570) 253-0846
FAX : (570) 253-1935
WWW.NEINFRA.COM

STAMP

STATE OF NEW YORK · DALE L. ENGLEMAN · 090021 · LICENSED PROFESSIONAL ENGINEER

Office of Construction and Facilities Management

VA U.S. Department of Veterans Affairs

Drawing Title: ELECTRICAL DETAILS	Phase: CONSTRUCTION DOCUMENTS	Project Title: IMPROVE POTABLE WATER DISTRIBUTION SYSTEM	Project Number: 528A4-16-205
			Building Number: N/A
Approved: Project Director: VA NEW YORK HEALTHCARE SYSTEM		Location: 222 RICHMOND AVENUE BATAVIA, NY 14020	Drawing Number: E-500
		Issue Date: 06/08/2022 · Checked: D.L.E. · Drawn: E.G.W.	

File Path: 6/14/2009 12:39:03 PM

VA FORM 08 - 6231

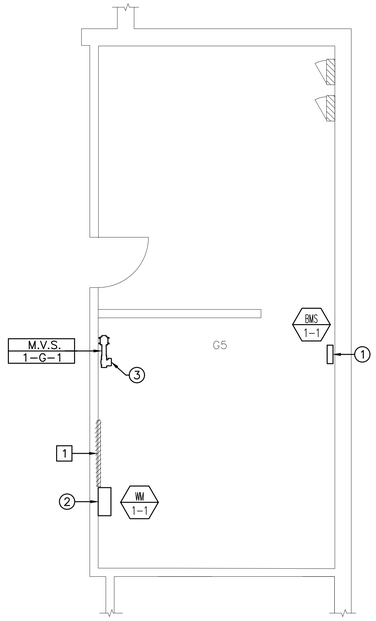

PROJECT NORTH

1 / EY-100 BUILDING 1 GROUND FLOOR ROOM G5

SCALE: 1/4"=1'-0"

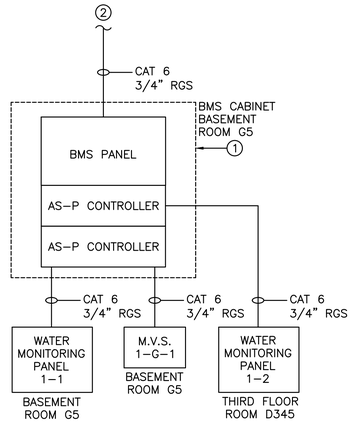

2 / EY-100 BUILDING 1 PARTIAL CONTROLS ONE-LINE DIAGRAM

SCALE: NO SCALE

GENERAL NOTES:

1. ALL CONNECTIONS TO THE BUILDING MANAGEMENT SYSTEM SHALL BE COORDINATED WITH THE VA COR.
2. CONTRACTOR SHALL PROVIDE SHOP DRAWINGS SHOWING ALL ASSOCIATED CONNECTIONS AND ENDPOINT DEVICES TO ENSURE A COMPLETE AND WORKING SYSTEM.
3. CONTRACTOR SHALL ENSURE A COMPLETE AND WORKING SYSTEM AT THE COMPLETION OF CONSTRUCTION.
4. CONTRACTOR SHALL PROVIDE ALL MATERIALS NECCESSARY TO INTEGRATE MECHANICAL EQUIPMENT BMS CONNECTIONS WITH THE EXISTING U & S SERVICES SCHNEIDER ELECTRIC SYSTEM THROUGHOUT THE FACILITY.
5. ALL CONTROL POINTS AND MONITORING SHALL BE PROGRAMMED AND OPERATIONAL AT THE COMPLETION OF CONSTRUCTION.
6. CONTRACTOR SHALL PROVIDE ADEQUATE TRAINING FOR VA FACILITY STAFF TO ENSURE ABILITY TO OPERATE THE PROVIDED SYSTEM.
7. FOR ALL AREAS IN WHICH CONDUIT IS EXPOSED RGS CONDUIT SHALL BE INSTALLED. FOR ALL AREAS IN WHICH CONDUIT IS CONCEALED EMT IS ACCEPTABLE FOR INSTALLATION.
8. PROVIDE FLEXIBLE METAL CONDUIT FOR CONNECTIONS TO MOTORS AND OTHER ELECTRICAL EQUIPMENT SUBJECT TO MOVEMENT, VIBRATION, MISALIGNMENT, CRAMPED QUARTERS, OR NOISE TRANSMISSION. FLEXIBLE METAL CONDUIT SHALL BE NO LONGER THAN 6 FT IN LENGTH. PROVIDE LIQUID TIGHT FLEXIBLE METAL CONDUIT FOR INSTALLATION IN EXTERIOR LOCATIONS, MOISTURE OR HUMIDITY LADEN ATMOSPHERE, CORROSIVE ATMOSPHERE, WATER OR SPRAY WASH DOWN OPERATIONS, AND LOCATIONS SUBJECT TO SEEPAGE OR DRIPPING OF OIL, GREASE, OR WATER. LIQUID-TIGHT FLEXIBLE METAL CONDUIT SHALL BE NO LONGER THAN 6 FT IN LENGTH.

1/EY-100 AND 3/EY-100 KEYED NOTES:

1. PROVIDE BMS CABINET, PANEL, AND ASSOCIATED CONTROLLERS. AS-P CONTROLLERS AND BMS PANEL TO BE LOCATED WITHIN SINGLE CABINET. CONTRACTOR SHALL PROVIDE SHOP DRAWINGS SHOWING ALL ASSOCIATED ENDPOINT DEVICES AND MATERIALS REQUIRED FOR INSTALLATION TO ENSURE A COMPLETE AND WORKING SYSTEM. INCLUDING BUT NOT LIMITED TO SCHEMATIC WIRING DIAGRAM. PROVIDE CONNECTION TO LOCAL BMS SYSTEM. SEE ASSOCIATED WIRING DIAGRAM 1/EY-100.
2. WATER MONITORING PANEL. PROVIDE ALL ASSOCIATED CONNECTIONS TO BUILDING MANAGEMENT SYSTEM. PROVIDE ALL REQUIRED EQUIPMENT AND CONNECTIONS TO ENSURE A COMPLETE AND WORKING SYSTEM. CONTRACTOR SHALL PROVIDE SHOP DRAWINGS SHOWING ALL ASSOCIATED ENDPOINT DEVICES AND MATERIALS REQUIRED FOR INSTALLATION. INCLUDING BUT NOT LIMITED TO A SCHEMATIC WIRING DIAGRAM. SEE ASSOCIATED PARTIAL CONTROLS ONE LINE DIAGRAM 1/EY-100.
3. MIXING VALVE STATION. PROVIDE ALL ASSOCIATED CONNECTIONS TO BUILDING MANAGEMENT SYSTEM. PROVIDE ALL REQUIRED EQUIPMENT AND CONNECTIONS TO ENSURE A COMPLETE AND WORKING SYSTEM. CONTRACTOR SHALL PROVIDE SHOP DRAWINGS SHOWING ALL ASSOCIATED ENDPOINT DEVICES AND MATERIALS REQUIRED FOR INSTALLATION. INCLUDING BUT NOT LIMITED TO A SCHEMATIC WIRING DIAGRAM. SEE ASSOCIATED PARTIAL CONTROLS ONE LINE DIAGRAM 1/EY-100.

2/EY-100 KEYED NOTES:

1. SEE 1/E-100 FOR ASSOCIATED 120V CIRCUITING.
2. PROVIDE CONNECTION TO EXISTING IT CLOSET AND SOURCE BMS PANEL IN LOCAL EXISTING IT CLOSET. ALL WORK SHALL BE COORDINATED WITH THE VA COR. CONTRACTOR SHALL COORDINATE FINAL ENDPOINT DESTINATION WITH VA IT AND COR. CONTRACTOR SHALL PROVIDE ALL MATERIALS AND LABOR REQUIRED TO INSTALL A COMPLETE AND WORKING SYSTEM. PROVIDE SHOP DRAWINGS SHOWING ALL ENDPOINT DEVICES AND ALL ASSOCIATED CONNECTIONS. CONTRACTOR SHALL VERIFY ASSOCIATED ENDPOINT LOCATION. CONTRACTOR SHALL ASSUME A DISTANCE OF 300' TO SOURCE BMS PANEL. PROVIDE ALL ASSOCIATED CONNECTIONS AND PROGRAMMING TO ENSURE A COMPLETE AND OPERATING SYSTEM.

DEMOLITION KEYED NOTE:

1. DEMOLISH EXISTING DISCONNECTED TELEPHONE PANEL ALL DEMOLITION SHALL BE COORDINATED WITH VA COR.

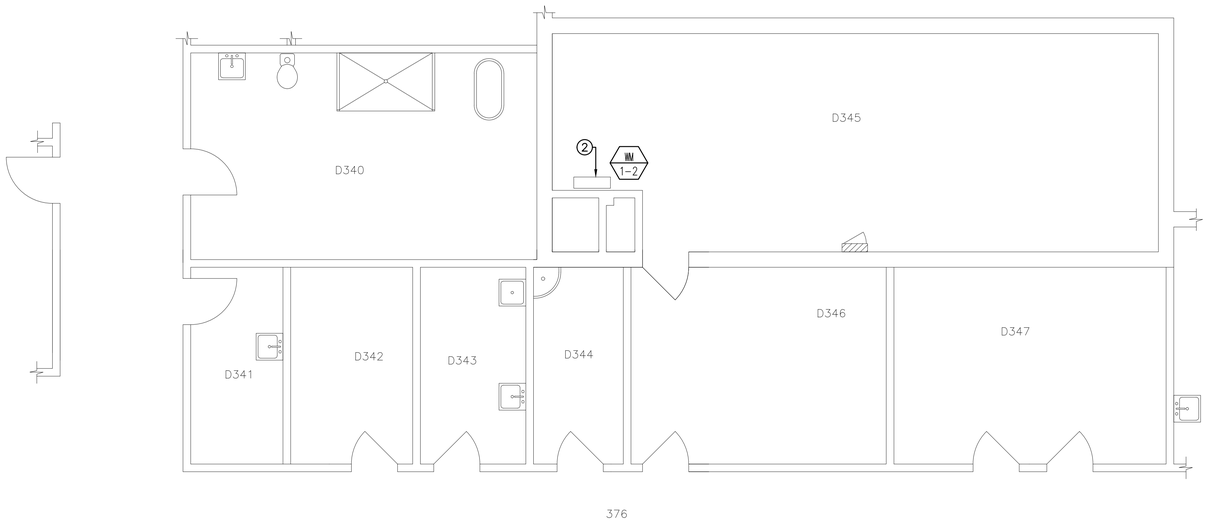

PROJECT NORTH

3 / EY-100 BUILDING 1 THIRD FLOOR ROOM D351 AND D345

SCALE: 1/4"=1'-0"

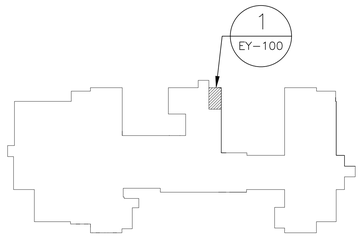

BUILDING 1 GROUND FLOOR KEY PLAN

SCALE: 1/64"=1'-0"

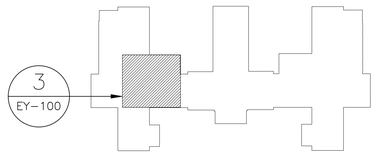

BUILDING 1 THIRD FLOOR KEY PLAN

SCALE: 1/64"=1'-0"

Revisions:	Date:

CONSULTANT

ARCHITECT/ENGINEER OF RECORD

NEI NORTHEAST INFRASTRUCTURE, LLC
34 BROWN STREET
HONESDALE, PA 18431
OFFICE : (570) 253-0846
FAX : (570) 253-1935
WWW.NEINFRA.COM

STAMP

STATE OF NEW YORK · DALE L. ENGLEHART · 090021 · LICENSED PROFESSIONAL ENGINEER

Office of Construction and Facilities Management

VA U.S. Department of Veterans Affairs

Drawing Title: BUILDING 1 SPECIAL SYSTEMS PLANS AND PARTIAL CONTROLS ONE-LINE DIAGRAM	Phase: CONSTRUCTION DOCUMENTS	Project Title: IMPROVE POTABLE WATER DISTRIBUTION SYSTEM	Project Number: 528A4-16-205
			Building Number: 1
Approved: Project Director: VA NEW YORK HEALTHCARE SYSTEM		Location: 222 RICHMOND AVENUE BATAVIA, NY 14020	Drawing Number: EY-100
		Issue Date: 06/08/2022 · Checked: D.L.E. · Drawn: E.G.W.	

VA FORM 08 - 6231

File Path

6/14/2022 12:39:03 PM

GENERAL NOTES:

1. ALL CONNECTIONS TO THE BUILDING MANAGEMENT SYSTEM SHALL BE COORDINATED WITH THE VA COR.
2. CONTRACTOR SHALL PROVIDE SHOP DRAWINGS SHOWING ALL ASSOCIATED CONNECTIONS AND ENDPOINT DEVICES TO ENSURE A COMPLETE AND WORKING SYSTEM.
3. CONTRACTOR SHALL ENSURE A COMPLETE AND WORKING SYSTEM AT THE COMPLETION OF CONSTRUCTION.
4. CONTRACTOR SHALL PROVIDE ALL MATERIALS NECCESSARY TO INTEGRATE MECHANICAL EQUIPMENT BMS CONNECTIONS WITH THE EXISTING U & S SERVICES SCHNEIDER ELECTRIC SYSTEM THROUGHOUT THE FACILITY.
5. ALL CONTROL POINTS AND MONITORING SHALL BE PROGRAMMED AND OPERATIONAL AT THE COMPLETION OF CONSTRUCTION.
6. CONTRACTOR SHALL PROVIDE ADEQUATE TRAINING FOR VA FACILITY STAFF TO ENSURE ABILITY TO OPERATE THE PROVIDED SYSTEM.
7. FOR ALL AREAS IN WHICH CONDUIT IS EXPOSED RGS CONDUIT SHALL BE INSTALLED. FOR ALL AREAS IN WHICH CONDUIT IS CONCEALED EMT IS ACCEPTABLE FOR INSTALLATION.
8. PROVIDE FLEXIBLE METAL CONDUIT FOR CONNECTIONS TO MOTORS AND OTHER ELECTRICAL EQUIPMENT SUBJECT TO MOVEMENT, VIBRATION, MISALIGNMENT, CRAMPED QUARTERS, OR NOISE TRANSMISSION. FLEXIBLE METAL CONDUIT SHALL BE NO LONGER THAN 6 FT IN LENGTH. PROVIDE LIQUID TIGHT FLEXIBLE METAL CONDUIT FOR INSTALLATION IN EXTERIOR LOCATIONS, MOISTURE OR HUMIDITY LADEN ATMOSPHERE, CORROSIVE ATMOSPHERE, WATER OR SPRAY WASH DOWN OPERATIONS, AND LOCATIONS SUBJECT TO SEEPAGE OR DRIPPING OF OIL, GREASE, OR WATER. LIQUID–TIGHT FLEXIBLE METAL CONDUIT SHALL BE NO LONGER THAN 6 FT IN LENGTH.

KEYED NOTES:

1. PROVIDE AS–P CONTROLLER IN EXISTING BMS CABINET. CONTRACTOR SHALL PROVIDE SHOP DRAWINGS SHOWING ALL ASSOCIATED ENDPOINT DEVICES AND MATERIALS REQUIRED FOR INSTALLATION TO ENSURE A COMPLETE AND WORKING SYSTEM. INCLUDING BUT NOT LIMITED TO SCHEMATIC WIRING DIAGRAM. PROVIDE CONNECTION TO LOCAL BMS SYSTEM. SEE ASSOCIATED WIRING DIAGRAM 2/EY–101.
2. WATER MONITORING PANEL. PROVIDE ALL ASSOCIATED CONNECTIONS TO BUILDING MANAGEMENT SYSTEM. PROVIDE ALL REQUIRED EQUIPMENT AND CONNECTIONS TO ENSURE A COMPLETE AND WORKING SYSTEM. CONTRACTOR SHALL PROVIDE SHOP DRAWINGS SHOWING ALL ASSOCIATED ENDPOINT DEVICES AND MATERIALS REQUIRED FOR INSTALLATION. INCLUDING BUT NOT LIMITED TO A SCHEMATIC WIRING DIAGRAM. SEE ASSOCIATED PARTIAL CONTROLS ONE LINE DIAGRAM 2/EY–101.
3. MIXING VALVE STATION. PROVIDE ALL ASSOCIATED CONNECTIONS TO BUILDING MANAGEMENT SYSTEM. PROVIDE ALL REQUIRED EQUIPMENT AND CONNECTIONS TO ENSURE A COMPLETE AND WORKING SYSTEM. CONTRACTOR SHALL PROVIDE SHOP DRAWINGS SHOWING ALL ASSOCIATED ENDPOINT DEVICES AND MATERIALS REQUIRED FOR INSTALLATION. INCLUDING BUT NOT LIMITED TO A SCHEMATIC WIRING DIAGRAM. SEE ASSOCIATED PARTIAL CONTROLS ONE LINE DIAGRAM 2/EY–101.

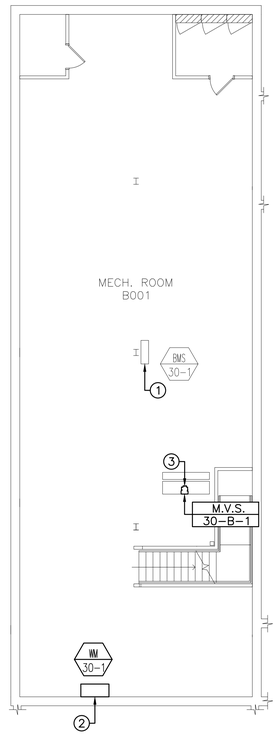

PROJECT NORTH

1 / EY–101 BUILDING 30 BASEMENT/CRAWLSPACE
SCALE: 1/8"=1'–0"

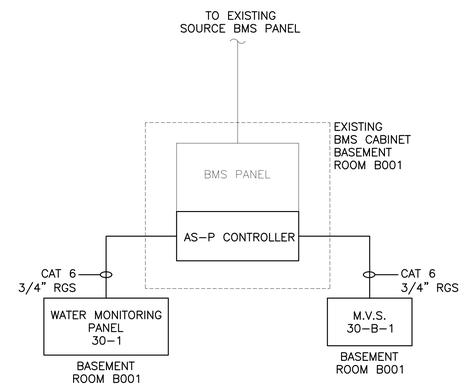

2 / EY–101 BUILDING 30 PARTIAL CONTROLS ONE–LINE DIAGRAM
SCALE: NO SCALE

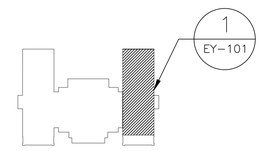

BUILDING 30
BASEMENT KEY PLAN
SCALE: 1/64"=1'–0"

Revisions:	Date:

CONSULTANT

ARCHITECT/ENGINEER OF RECORD

NEI NORTHEAST INFRASTRUCTURE, LLC
34 BROWN STREET
HONESDALE, PA 18431
OFFICE : (570) 253-0846
FAX : (570) 253-1935
WWW.NEINFRA.COM

STAMP

STATE OF NEW YORK · DALE L. ENGLEHART · 090021 · LICENSED PROFESSIONAL ENGINEER

Office of Construction and Facilities Management

VA U.S. Department of Veterans Affairs

Drawing Title: BUILDING 30 SPECIAL SYSTEMS PLAN AND PARTIAL CONTROLS ONE-LINE DIAGRAM

Phase: CONSTRUCTION DOCUMENTS

Project Title: IMPROVE POTABLE WATER DISTRIBUTION SYSTEM

Project Number: 528A4-16-205

Building Number: 30

Approved: Project Director: VA NEW YORK HEALTHCARE SYSTEM

Location: 222 RICHMOND AVENUE, BATAVIA, NY 14020

Issue Date: 06/08/2022 | Checked: D.L.E. | Drawn: E.G.W.

Drawing Number: EY-101

VA FORM 08 - 6231

File Path

6/14/2009 12:39:03 PM

JOB: 528A5-16-205
BUILDING: BUILDING 1 GROUND FLOOR
ROOM G5

SYSTEM: WATER MONITORING PANEL
WM-1-1

SYSTEM COMPONENT:	POINT ID	ABBREVIATION	STATUS	TEMPERATURE (L) °F	PRESSURE (PSI)	pH (0-14)	TURBIDITY (NTU)	FREE CHLORINE (PPM)	Local Alarm Panel	Area Alarm Panel	Master Alarm Panel	HIGH LIMIT	LOW LIMIT	PRESSURE/VOLUME CONTROL	FAILURE MODE CONTROL	SPACE TEMP CONTROL	FULL COMMUNICATION	TRENDING	REMARKS
pH	AI-1	pHcw				●												●	4-20mA SIGNAL
Cold Water Temperature	AI-2	Tcw		●														●	4-20mA SIGNAL
Cold Water Pressure	AI-3	Pcw			●													●	4-20mA SIGNAL
Cold Water Turbidity	AI-4	NTUcw					●											●	4-20mA SIGNAL
Cold Water Free Chlorine	AI-5	Cl2cw						●										●	4-20mA SIGNAL
Communications Error	DI-1	COMMERROR	●																

JOB: 528A5-16-205
BUILDING: BUILDING 1 THIRD FLOOR
ROOM D345

SYSTEM: WATER MONITORING PANEL
WM-1-2

SYSTEM COMPONENT:	POINT ID	ABBREVIATION	STATUS	TEMPERATURE (L) °F	PRESSURE (PSI)	pH (0-14)	TURBIDITY (NTU)	FREE CHLORINE (PPM)	Local Alarm Panel	Area Alarm Panel	Master Alarm Panel	HIGH LIMIT	LOW LIMIT	PRESSURE/VOLUME CONTROL	FAILURE MODE CONTROL	SPACE TEMP CONTROL	FULL COMMUNICATION	TRENDING	REMARKS
pH	AI-1	pHcw				●												●	4-20mA SIGNAL
Cold Water Temperature	AI-2	Tcw		●														●	4-20mA SIGNAL
Cold Water Pressure	AI-3	Pcw			●													●	4-20mA SIGNAL
Cold Water Turbidity	AI-4	NTUcw					●											●	4-20mA SIGNAL
Cold Water Free Chlorine	AI-5	Cl2cw						●										●	4-20mA SIGNAL
Communications Error	DI-1	COMMERROR	●																

JOB: 528A5-16-205
BUILDING: BUILDING 30 BASEMENT
ROOM B001

SYSTEM: WATER MONITORING PANEL
WM-30-1

SYSTEM COMPONENT:	POINT ID	ABBREVIATION	STATUS	TEMPERATURE (L) °F	PRESSURE (PSI)	pH (0-14)	TURBIDITY (NTU)	FREE CHLORINE (PPM)	Local Alarm Panel	Area Alarm Panel	Master Alarm Panel	HIGH LIMIT	LOW LIMIT	PRESSURE/VOLUME CONTROL	FAILURE MODE CONTROL	SPACE TEMP CONTROL	FULL COMMUNICATION	TRENDING	REMARKS
pH	AI-1	pHcw				●												●	4-20mA SIGNAL
Cold Water Temperature	AI-2	Tcw		●														●	4-20mA SIGNAL
Cold Water Pressure	AI-3	Pcw			●													●	4-20mA SIGNAL
Cold Water Turbidity	AI-4	NTUcw					●											●	4-20mA SIGNAL
Cold Water Free Chlorine	AI-5	Cl2cw						●										●	4-20mA SIGNAL
Communications Error	DI-1	COMMERROR	●																

1 EY-600 POINTS LIST FOR DOMESTIC WATER QUALITY MONITORING
SCALE:N.T.S.

NOTE:
1. SENSOR & 4-20mA SIGNAL FROM UNIT

CONTRACTOR SHALL RETAIN U&S SERVICES FOR MODIFICATIONS TO MONITORING SYSTEM. CONTACT SHALL BE DAN FAES @ U&S SERVICES - 95 STARK STREET TONAWANDA, NY 14150 TELEPHONE (716) 693 4490

BMS EQUIPMENT SCHEDULE

EQUIPMENT	BASIS OF DESIGN	MODEL NO.	VOLTAGE	WATTS	REMARKS
IP CONTROLLER	AS-P SMART X CONTROLLER	SXWASPXXX1000	24V	10W	PROVIDE ASSOCIATED TERMINAL BASE
POWER SUPPLY MODULE	POWER SUPPLY PS-24V	SXWPS24VX1001	24V	30W	PROVIDE ASSOCIATED 120V POWER BASE SXWTBPSW110001

NOTE:
ALL WORK SHALL BE COORDINATED WITH THE VA COR. CONTRACTOR SHALL ENSURE A COMPLETE AND WORKING SYSTEM AT THE COMPLETION OF CONSTRUCTION. PROVIDE SHOP DRAWINGS SHOWING ALL ASSOCIATED MATERIALS AND CONNECTIONS FOR INSTALLATION.

DOMESTIC WATER TEMPERATURE MONITORING NOTES:

GENERAL:
- THE HOT WATER TEMPERATURE SHALL BE SET TO 150°F (ADJ.) MANUALLY VIA WATER HEATER'S BLENDING VALVE.

DOMESTIC HOT WATER RECIRCULATION PUMPS: (TYPICAL)
- DOMESTIC HOT WATER RECIRCULATION PUMP SHALL BE ENABLED/DISABLED VIA A MANUAL STARTER
- DOMESTIC HOT WATER RECIRCULATION PUMP SHALL OPERATE CONTINUOUSLY.
- INSTALL A CURRENT STATUS SWITCH TO PROVE RECIRCULATION PUMP OPERATION.

DOMESTIC WATER TEMPERATURE MONITORING:
- INSTALL TEMPERATURE SENSORS AND DOWNSTREAM OF EACH MIXING VALVE STATION AND ALL WATER HEATERS, AND MOST REMOTE FIXTURE
- INSTALL TEMPERATURE SENSORS IN EXISTING STORAGE TANKS.

ALARMS, INTERLOCKS, AND SAFETIES:
- SEND AN ALARM TO THE FMCS UPON THE OCCURRENCE OF ANY OF THE FOLLOWING CONDITIONS:
  - IF A DOMESTIC (HOT) WATER RECIRCULATION PUMP CURRENT STATUS SWITCH DOES NOT PROVE PUMP OPERATION.
  - IF ANY DOMESTIC HOT WATER SUPPLY TEMPERATURE DEVIATES 5°F (ADJ.) ABOVE OR BELOW SET POINT FOR MORE THAN 10 MINUTES (ADJ.)
  - IF ANY DOMESTIC HOT WATER DISTRIBUTION TEMPERATURE IS BELOW 130°F (ADJ) FOR MORE THAN 10 MINUTES (ADJ.) ON THE PRIMARY HWR OR BELOW 120°F (ADJ.)FOR MORE THAN TEN MINUTES (ADJ.) ON THE FLOOR HWR.
  - IF ANY DOMESTIC COLD WATER SUPPLY TEMPERATURE IS ABOVE 65°F (ADJ) FOR MORE THAN 10 MINUTES (ADJ.)

REPORT GENERATION
- FMCS SHALL MONITOR THE FOLLOWING POINTS ON 5 MINUTE (ADJ.) INTERVALS WITHIN A SINGLE TREND. THE TREND SHALL RUN FOR A 14-DAY (ADJ.) DURATION AT WHICH POINT THE NEWEST VALUES SHALL OVERWRITE THE OLDEST VALUES:
  - DATE
  - TIME
  - STATUS OF ALL CIRCULATION PUMPS (ON/OFF)
  - DOMESTIC HOT WATER CIRCULATION RETURN TEMP (F)
  - DOMESTIC HOT WATER SUPPLY TEMP (F)
  - DOMESTIC COLD WATER SUPPLY TEMP (F)
- THIS INFORMATION SHALL BE ACCESSIBLE TO VIEW IN TABULAR AND GRAPHICAL FORM ON THE FMCS OPERATOR INTERFACE.

JOB: 528A5-16-205
BUILDING: PLUMBING HOT WATER MONITORING
DDC POINTS LIST

SYSTEM:
DIGITAL MIXING VALVE
STATION (TYP.)

SYSTEM COMPONENT:	POINT ID	ABBREVIATION	PRIORITY AND ALTERNATE NO.	ELECTRIC DEVICE	START/STOP	OPEN/CLOSE	SPEED COMMAND	VALVE POSITION	TANK POSITION	STATUS	ALARM	PRESSURE	HIGH HUMIDITY	LOW STATIC PRESSURE	TEMPERATURE (L)	PRESSURE	POSITION	FLOW	PERCENT	STATIC PRESSURE	CARBON MONOXIDE	HUMIDITY	Local Alarm Panel	Area Alarm Panel	Master Alarm Panel	HIGH LIMIT	LOW LIMIT	SCHEDULE START/STOP	FUNCTION	DUTY CYCLE	TEMPERATURE ECONOMIZER	ENTHALPY ECONOMIZER	TEMPERATURE RESET	DEMAND LIMITING	STATIC PRESSURE RESET	PRESSURE/VOLUME CONTROL	FAILURE MODE CONTROL	SPACE TEMP CONTROL	FULL COMMUNICATION	TRENDING	REMARKS
Mixed HW Outlet Temperature	AI-1	MhwT								●					●																										●	BACNet signal
HW Recirculation Temperature	AI-2	hwRT								●					●																										●	BACNet signal
HW Inlet Temperature	AI-3	hwIT								●					●										●																●	BACNet signal
CW Inlet Temperature	AI-4	cwIT								●					●																										●	BACNet signal
Mixed Outlet HW Pressure	AI-5	MhwP								●					●																										●	BACNet signal
HW Recirculation Pressure	AI-6	hwRP								●						●									●																●	BACNet signal
HW Inlet Pressure	AI-7	hwIP								●						●																●									●	BACNet signal
CW Inlet Pressure	AI-8	cwIP								●						●									●									●							●	BACNet signal
Mixed HW Outlet Flow Rate	AI-9	MhwF								●								●																							●	BACNet signal
HW Recirculation Flow Rate	AI-10	hwRP								●								●							●																●	BACNet signal
Mixed HW Setpoint Target	AI-11	Mhp SP													●																										●	BACNet signal
HW/CW Mix Percentage	AI-12	hwcwP																	●																						●	BACNet signal
HW Circulator Status	DI-1	hwCSTS																																							●	BACNet signal
Communications Error	DI-2	COMMERROR							●																																●	BACNet signal

2 EY-600 POINTS LIST FOR PLUMBING HOT WATER MONITORING
SCALE:NO SCALE

NOTE:
1. SENSOR & BACnet SIGNAL FROM POWERS INTELLISTATION CONTROLLER FURNISHED WITH UNIT.

Revisions:	Date:

CONSULTANT

ARCHITECT/ENGINEER OF RECORD
NEI NORTHEAST INFRASTRUCTURE, LLC
34 BROWN STREET
HONESDALE, PA 18431
OFFICE : (570) 253-0846
FAX : (570) 253-1935
WWW.NEINFRA.COM

STAMP
STATE OF NEW YORK · DALE L. ENGLEHART · 090021 · LICENSED PROFESSIONAL ENGINEER

Office of Construction and Facilities Management
VA U.S. Department of Veterans Affairs

Drawing Title: SPECIAL SYSTEMS SCHEDULES
Phase: CONSTRUCTION DOCUMENTS
Project Title: IMPROVE POTABLE WATER DISTRIBUTION SYSTEM
Project Number: 528A4-16-205
Building Number: N/A
Approved: Project Director: VA NEW YORK HEALTHCARE SYSTEM
Location: 222 RICHMOND AVENUE BATAVIA, NY 14020
Issue Date: 06/08/2022
Checked: D.L.E.
Drawn: E.G.W.
Drawing Number: EY-600

VA FORM 08 - 6231
File Path
6/14/2019 12:39:03 PM