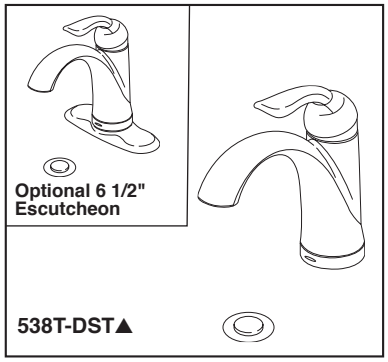

Submitted Model No.:_____

Specific Features:_____

see what Delta can do℠

BATHROOM FAUCET

- Lahara® Bath Collection
- Single Handle Deck Mount

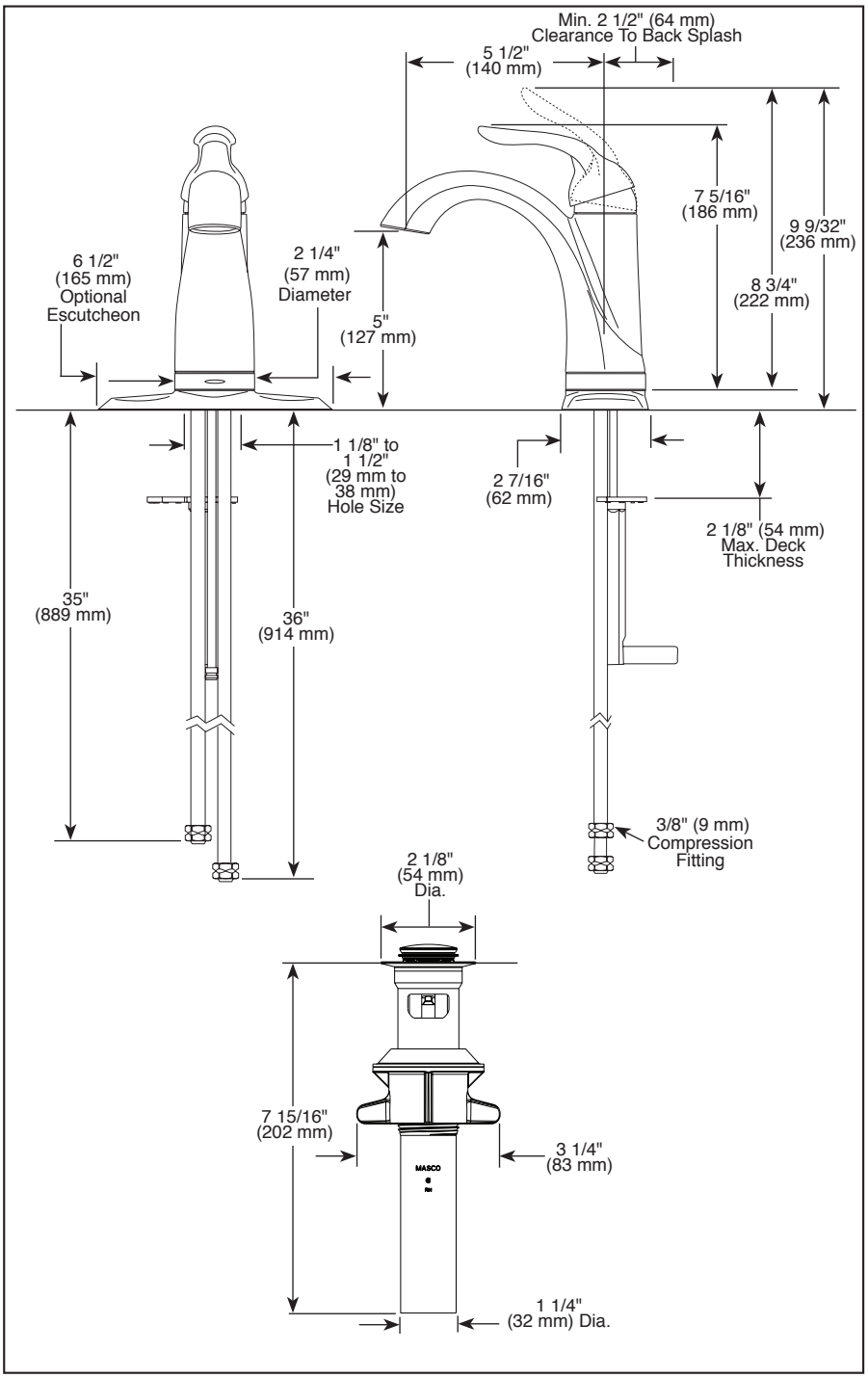

▲ Designate Proper Finish Suffix

Delta reserves the right (1) to make changes in specifications and materials, and (2) to change or discontinue models, both without notice or obligation. Dimensions are for reference only. See current full-line price book or www.deltafaucet.com for finish options and product availability.

DSP-L-538T-DST Rev. H

FEATURES:

- DIAMOND Seal® Technology
- Touch$_2$O.$_{xt}$™ Technology

STANDARD SPECIFICATIONS:

- Max. flow rate 1.2 gpm @ 60 psi, 4.5 L/min @ 414 kPa
- One or three hole mount (escutcheon optional, included)
- Diamond coated ceramic cartridge
- 1/4" O.D. straight, staggered PEX supply lines
- LED indicator light signals on-off, water temperature and when batteries run low
- Uses 6 AA (included) or 6 C (optional) batteries
- Optional (EP73954) 120V AC adapter available (3 prong grounded outlet required)
- Metal push pop-up
- Optional red/blue indicator ring provided with model

WARRANTY

- Parts and Finish - Lifetime limited warranty; or for commercial purchasers, 10 years for multi-family residential (apartments and condominiums) and 5 years for all other commercial uses, in each case from the date of purchase.
- Electronic Parts and Batteries (if applicable) - 5 years from the date of purchase; or for commercial purchasers, 1 year from the date of purchase. No warranty is provided on batteries.

WaterSense Meets EPA Criteria
Certified by CSA Group

COMPLIES WITH:

- ASME A112.18.1 / CSA B125.1
- ASME A112.18.2 / CSA B125.2
- ♿ Indicates compliance to ICC/ANSI A117.1 - Valve control only
- Verified compliant with .25% weighted average Pb content regulations.
- EPA WaterSense®

Delta Faucet Company
55 E. 111th Street, Indianapolis, IN 46280
350 South Edgeware Road, St. Thomas, ON N5P 4L1
© 2021 Delta Faucet Company