LITHONIA LIGHTING®

Catalog Number	
Notes	
Type	

DIGITAL NAVIGATION

Ordering Tree Platform SensorSwitch JOT Photometrics Performance Data

CPX LED

LED Lay-in Panel

1' x 4', 2' x 2'and 2' x 4'

FEATURES & SPECIFICATIONS

INTENDED USE — The CPX Series LED is a low-glare panel featuring an external driver. This cost-effective, reliable flat panel is visually comfortable and can be recessed mounted. Suitable for many applications such as schools, offices, retail, convenience stores, hospitals, healthcare facilities and other commercial spaces. Certain airborne contaminants can diminish integrity of acrylic. **Click here for Acrylic Environmental Compatibility table for suitable uses**. Adjustable Lumen (AL07, AL08) and Switchable White (SWW7) configurations available. **U.S. Patent No. 10,681,784.**

CONSTRUCTION — The extruded aluminum frame with satin white lens provides excellent shielding and uniform luminance. CPX's low-profile design provides increased installation flexibility especially in restricted plenum spaces. The back plate includes integral T-bar clips for installation into T-grid ceilings.

ELECTRICAL — Direct-lit Panel with Long-Life LEDs, coupled with a high-efficiency driver, provide superior illumination for extended service life. Greater than 70% LED lumen maintenance at 60,000 hours (L70>60,000). 0-10V dimming driver, dims to 10% and contains non-isolated dimming leads.

CONTROLS — SensorSwitch wireless dimming (JOT) or luminaire-embedded occupancy sensor control (JOTVTX15) with JOT pairing for wall switch On/Off /Dimming control or auto off when the space is unoccupied. See page 4 for more details of the integrated wireless sensor.

LISTINGS — CSA certified to meet US and Canadian standards. Damp location listed. IC rated. IP5X Rated. DesignLights Consortium® (DLC) qualified product. Not all versions of this product may be DLC qualified. Please check the DLC Qualified Products List at www.designlights.org/QPL to confirm which versions are qualified. Product is rated and certified to meet NSF Splash Zone 2. NOM Certified.

WARRANTY — 5-year limited warranty. Complete warranty terms located at: www.acuitybrands.com/support/warranty/terms-and-conditions

Note: Actual performance may differ as a result of end-user environment and application. All values are design or typical values, measured under laboratory conditions at 25 °C. Specifications subject to change without notice

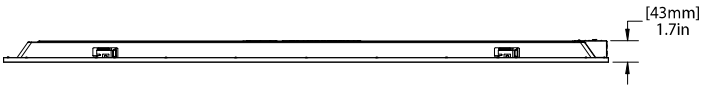

Switchable Lumens

ORDERING INFORMATION

Example: CPX 2X2 3200LM 80CRI 40K SWL MIN10 ZT MVOLT E10WLCP

Series	Fixture Dimension	Lumen Output		CRI	Color Temperature	Diffuser	Minimum Dimming Level
CPX LED Panel	1X4 1' X 4'	**Standard lumens:** 3200LM 3200 Lumens 5000LM 5000 Lumens	**High Efficiency lumens:** 3200LMHE 3200 Lumens	80CRI 80 CRI	35K 3500K 40K 4000K 50K 5000K	SWL Satin White A12 Prismatic A12 Pattern	MIN10 Dims to 10%
	2X2 2' X 2'	3200LM 3200 Lumens 5000LM 5000 Lumens	3200LMHE 3200 Lumens				
	2X4 2' X 4'	4000LM 4000 Lumens 6000LM 6000 Lumens	4000LMHE 4000 Lumens				

Control Input	Voltage	Emergency Option	Controls	Options
ZT Generic 0-10V Dimming	MVOLT MVOLT, 120-277V 347 347 ‡	(blank) no battery E10WLCP EM Self-Diagnostic battery pack, 10W Constant Power, CEC compliant	(blank) no controls JOT Wireless room control with "Just One Touch" pairing ‡ JOTVTX15 Wireless occupancy sensor with "Just One Touch" pairing ‡ VTX15 Standalone occupany sensor ‡	PWS1836 6' pre-wire, 3/8" diameter, 18 gauge, 1 circuit ‡ PWS1846 6' pre-wire, 3/8" diameter, 18 gauge, 2 circuit ‡ PWS1856LV 6' pre-wire, 3/8" diameter, 18 gauge, 1 circuit w/ low voltage ‡ CP Chicago plenum NPLT Narrow Pallet

NOTE: ‡ indicates option chosen has ordering restriction or note. Please reference restrictions/notes chart on next page. Options are sorted alphanumerically.

OPTION VALUE RESTRICTIONS/ NOTES

‡ Option Value Ordering Notes/ Restrictions	
Option value	**Restriction**
347	Not available with E10WLCP or Controls
JOT, JOTVTX15	Daylight photocell control can be enabled by using the Clairity mobile app.
VTX15	Factory configured for ADC - on/off occupancy with auto-dimming photocell
PWS1836	Not available with E10WLCP
PWS1846	Only available with E10WLCP
PWS1856LV	Not available with E10WLCP or Controls
E10WLCP	Configurations with E10WLCP to be used in daisy chaining or through wiring will require a Y connector not supplied. If used with CP option the contractor must verify that the Y connector is Chicago Plenum rated.
ILBLP CP10 HE SD A	ILBLP CP10 HE SD A remote mounted only. See ILBLP CP10 HE SD A spec sheet and ELA-PSMKPSMKSD-PSDMT-PSRME remote mounting enclosure spec sheet here.

NON CONFIGURABLE FIXTURES

ORDERING INFORMATION

Catalog Number	UPC	Description	Lumens	Color Temperature	CRI	Voltage	Wattage	Efficacy	Pallet Qty.
CPX 2X2 3200LM 35K M4	191848338537	2x2 LED Panel	3555	3500K	80	120-277	31.5	114	40
CPX 2X2 3200LM 40K M4	191848338650	2x2 LED Panel	3659	4000K	80	120-277	31.5	116	40
CPX 2X2 3200LM 50K M4	193048313642	2x2 LED Panel	3737	5000K	80	120-277	31.5	119	40
CPX 2X2 32L 35K JOTVTX15	194995615575	2X2 LED Panel with Sensor	3685	3500K	80	120-277	32	115	40
CPX 2X2 32L 40K JOTVTX15	194995405374	2x2 LED Panel with Sensor	3767	4000K	80	120-277	31	121	40
CPX 2X4 4000LM 35K M2	191848338490	2x4 LED Panel	4543	3500K	80	120-277	38.9	118	20
CPX 2X4 4000LM 40K M2	191848338506	2x4 LED Panel	4692	4000K	80	120-277	38.9	121	20
CPX 2X4 4000LM 50K M2	193048313680	2x4 LED Panel	4766	5000K	80	120-277	38.9	123	20
CPX 2X4 40L 35K JOTVTX15	194995615599	2X4 LED Panel with Sensor	5036	3500K	80	120-277	39	128	20
CPX 2X4 40L 40K JOTVTX15	194995405404	2x4 LED Panel with Sensor	5194	4000K	80	120-277	39.3	132	20
CPX 1X4 ALO7 SWW7 M4	194994568063	1X4 Switchable Panel	See Switchable Table	3500K/4000K/5000K	>80	120-277	See Switchable Table	See Switchable Table	40
CPX 1X4 ALO7 SWW7 UVOLT M4	194994625926	1X4 Switchable Panel	See Switchable Table	3500K/4000K/5000K	>80	120-347	See Switchable Table	See Switchable Table	40
CPX 1X4 ALO7 SWW7 IE10WCP	194995604456	1X4 Switchable Panel with Battery ‡	See Switchable Table	3500K/4000K/5000K	>80	120-277	See Switchable Table	See Switchable Table	26
CPX 2X2 ALO7 SWW7 M4	193048542806	2X2 Switchable Panel	See Switchable Table	3500K/4000K/5000K	>80	120-277	See Switchable Table	See Switchable Table	40
CPX 2X2 ALO7 SWW7 IE10WCP	194995604494	2X2 Switchable Panel with Battery ‡	See Switchable Table	3500K/4000K/5000K	>80	120-277	See Switchable Table	See Switchable Table	26
CPX 2X4 ALO8 SWW7 M2	193048542844	2X4 Switchable Panel	See Switchable Table	3500K/4000K/5000K	>80	120-277	See Switchable Table	See Switchable Table	20
CPX 2X4 ALO8 SWW7 IE10WCP	194995604319	2X4 Switchable Panel with Battery ‡	See Switchable Table	3500K/4000K/5000K	>80	120-277	See Switchable Table	See Switchable Table	13
CPX 2X2 3400LM 35K UVOLT M4	193048887136	2x2 Flat Panel	3555	3500K	>80	120-347	32	111	40
CPX 2X2 3400LM 40K UVOLT M4	193048887150	2x2 Flat Panel	3659	4000K	>80	120-347	32	114	40
CPX 2X4 4300LM 35K UVOLT M2	193048887181	2x4 Flat Panel	4543	3500K	>80	120-347	40	113	20
CPX 2X4 4300LM 40K UVOLT M2	193048887198	2x4 Flat Panel	4692	4000K	>80	120-347	40	117	20

‡ Switchable CPX fixtures with IE10WCP will default to 5000K when in emergency mode.

PERFORMANCE DATA

Switchable Table						
Size(ft)	**Nomenclature**	**Lumen Package**	**CCT**	**Lumen**	**Wattage**	**Efficacy**
1x4	CPX 1x4 ALO7 SWW7 M4	Low Lumen	3500K	2430	19.7	123.4
			4000K	2594	19.7	131.7
			5000K	2483	19.5	127.3
		Med Lumen	3500K	3289	28.4	115.8
			4000K	3583	27.2	131.7
			5000K	3369	28.2	119.5
		High Lumen	3500K	3914	35.7	109.6
			4000K	4280	33.7	127
			5000K	4009	35.5	112.9
2x2	CPX 2X2 ALO7 SWW7 M4	Low Lumen	3500K	2399	19.1	125.6
			4000K	2570	18.5	138.9
			5000K	2456	19.1	128.6
		Med Lumen	3500K	3356	28.7	116.9
			4000K	3649	27.5	132.7
			5000K	3427	28.5	120.2
		High Lumen	3500K	4131	37.5	110.2
			4000K	4564	35.8	127.5
			5000K	4212	37.3	112.9
2x4	CPX 2X4 ALO8 SWW7 M2	Low Lumen	3500K	3813	28.94	131.8
			4000K	4033	28.1	143.5
			5000K	3938	28.86	136.5
		Med Lumen	3500K	4677	36.8	127.1
			4000K	5009	35.55	140.9
			5000K	4834	36.65	131.9
		High Lumen	3500K	6048	50.56	119.6
			4000K	6563	48.53	135.2
			5000K	6241	50.24	124.2

© 2020-2021 Acuity Brands Lighting, Inc. All rights reserved. Rev. 07/13/21

ACCESSORIES

Accessories: *Order as separate catalog number.*	
ILBLP CP10 HE SD A	IOTA 10 Watt Constant Power, High Efficiency LED Emergency Driver for CA Title 20 ‡
ELA PSDMT	Remote mount tray for ILBLP battery.
DGA14	Drywall grid adapter for 1x4 recessed fixture.
DGA22	Drywall grid adapter for 2x2 recessed fixture.
DGA24	Drywall grid adapter for 2x4 recessed fixture.
1X4SMKSH	Multi-Use Surface Mount Kit 1x4, Shallow Depth
2X2SMKSH	Multi-Use Surface Mount Kit 2x2, Shallow Depth
2X4SMKSH	Multi-Use Surface Mount Kit 2x4, Shallow Depth
1X4SMKSHP PAF	Multi-Use Surface Mount Kit 1X4 Post-Paint
2X2SMKSHP PAF	Multi-Use Surface Mount Kit 2X2 Post-Paint
2X4SMKSHP PAF	Multi-Use Surface Mount Kit 2X4 Post-Paint
PAC 2DNF 36	Panel Air Craft Kit, 2 cables with Y splitter, No Power Feed, 36 inches. Recommended for 2X2 or 1X4 Panel Fixture.
PAC 2DF 36	Panel Air Craft Kit, 2 cables with Y splitter, with Power Feed, 36 inches. Recommended for 2X2 or 1X4 Panel Fixture.[1]
PAC 4DNF 36	Panel Air Craft Kit, 4 cables, No Power Feed, 36 inches. Recommended for 2X4 or 2X2 or 1X4 Panel Fixtures.
PAC 4DF 36	Panel Air Craft Kit, 4 cables, with Power Feed, 36 inches. Recommended for 2X4 or 2X2 or 1X4 Panel Fixtures.[1]
PAC 2DNF 72	Panel Air Craft Kit, 2 cables with Y splitter, No Power Feed 72 inches. Recommended for 2X2 or 1X4 Panel Fixture.
PAC 2DF 72	Panel Air Craft Kit, 2 cables with Y splitter, with Power Feed, 72 inches. Recommended for 2X2 or 1X4 Panel Fixture.[1]
PAC 4DNF 72	Panel Air Craft Kit, 4 cables, No Power Feed, 72 inches. Recommended for 2X4 or 2X2 or 1X4 Panel Fixtures.
PAC 4DF 72	Panel Air Craft Kit, 4 cables, with Power Feed, 72 inches. Recommended for 2X4 or 2X2 or 1X4 Panel Fixtures.[1]

Emergency Battery Delivered Lumens

Use the formula below to determine the delivered lumens in emergency mode

Delivered Lumens = 1.25 x P x LPW

P = Output power of emergency driver (10W for PS1055)

LPW = Lumen per watt rating of the luminaire.

Notes

1 For MVOLT only, not available with 347V.

Emergency Battery Pack Options - Field Installable

Battery Model Number	Wattage	Runtime (Minutes)	Lumen Output* @ 120 Lumens/Watt	Other
ILB CP07 2H A	7W	120	840	Storm Shelter/ 2-hour Runtime
ILB CP10 A	10W	90	1200	
ILBLP CP10 HE SD A	10W	90	1200	Title 20, Self Diagnostic
ILBLP CP15 HE SD A	15W	90	1800	Title 20, Self Diagnostic
ILB CP20 HE A	20W	90	2400	Title 20
ILB CP20 HE SD A	20W	90	2400	Title 20, Self Diagnostic

All the above are UL Listed products that are certified for field install external/remote to the fixture.
*Minimum delivered lumen output to assist in product selection for increased fixture mounting height.
The CP10 delivered emergency illumination outperforms legacy 1400 lumen fluorescent emergency ballast.
Please contact us at productsupportemergency@acuitybrands.com for any Emergency Battery related questions.

Lumen Maintenance

Reported Lumen Maintenance	Forecasted Lumen Maintenance
L90 @ 52k Hrs / L80 @ >60k Hrs / L70 @ >60k Hrs	L90 @ 52k Hrs / L80 @ 108k Hrs / L70 @ 170k Hrs

*Note - Reported LM based on IES standard 6X test period for LM-80 report. Forecasted LM based on TM-21 report extrapolation past 6X LM-80 testing.

CPX compatible with Sensor Switch™ WSX-D and SPOD wall switches.

WSX-D

SPOD

PHOTOMETRICS

See www.lithonia.com for photometry reports.

© 2020-2021 Acuity Brands Lighting, Inc. All rights reserved. Rev. 07/13/21

JOT WIRELESS

SensorSwitch JOT Enabled Wireless Solution

Designed with contractors in mind, the SensorSwitch JOT enabled wireless solution offers a straightforward approach to the installation and pairing of lighting fixtures and controls. Absolutely no 0-10V control wires and no mobile apps are needed with JOT enabled products, allowing for lightning speed installation right out of the box.

1. Power: Install JOT enabled fixtures and controls as instructed.
2. Pair: Insert the pairing tool into the pinhole on the wall switch; press and hold any button for 6 seconds.
3. Play: Once paired, each fixture will individually dim down to 10% brightness. All products will be fully functional.

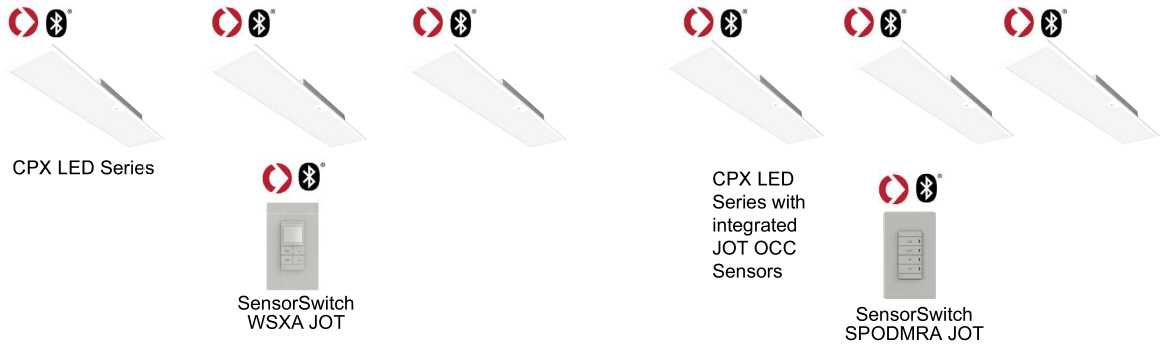

CPX 2X4 with JOT Vertex Sensor

CPX 1X4 with JOT Vertex sensor

CPX 2X2 with JOT Vertex Sensor

© 2020-2021 Acuity Brands Lighting, Inc. All rights reserved.

DIMENSIONS

Length: 47.8" 121.4cm
Width: 11.8" 30.0cm
Depth: 2.1" 5.4cm
Weight:
Unit: 8.11lbs
Unit Carton: 15.1lbs

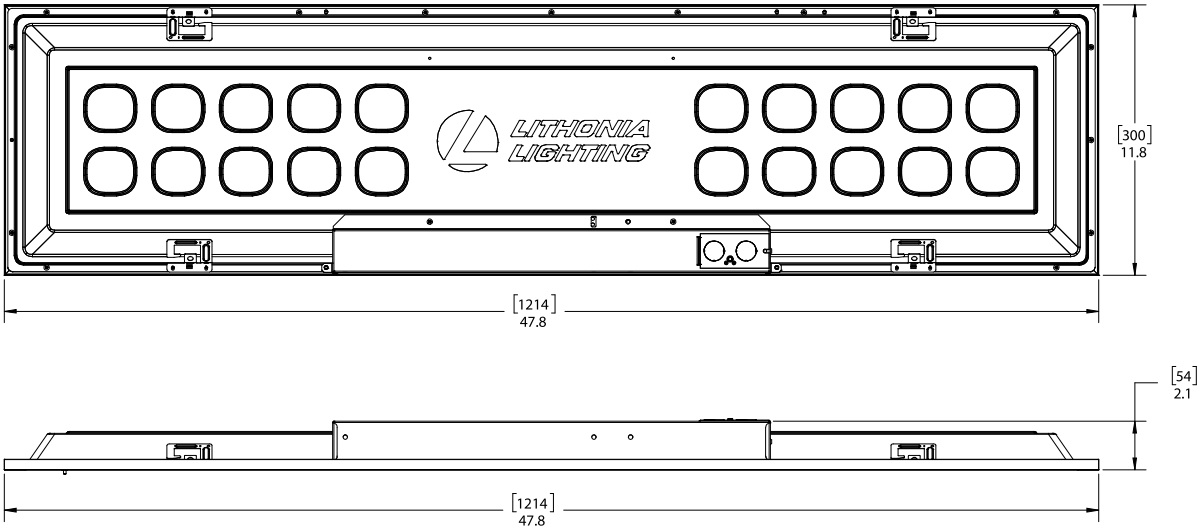

Length: 23.8" 60.5cm
Width: 23.8" 60.5cm
Depth: 1.7" 4.3cm
Weight:
Unit: 9.45lbs
Unit Carton: 10.45lbs
Master Carton: 39.5lbs

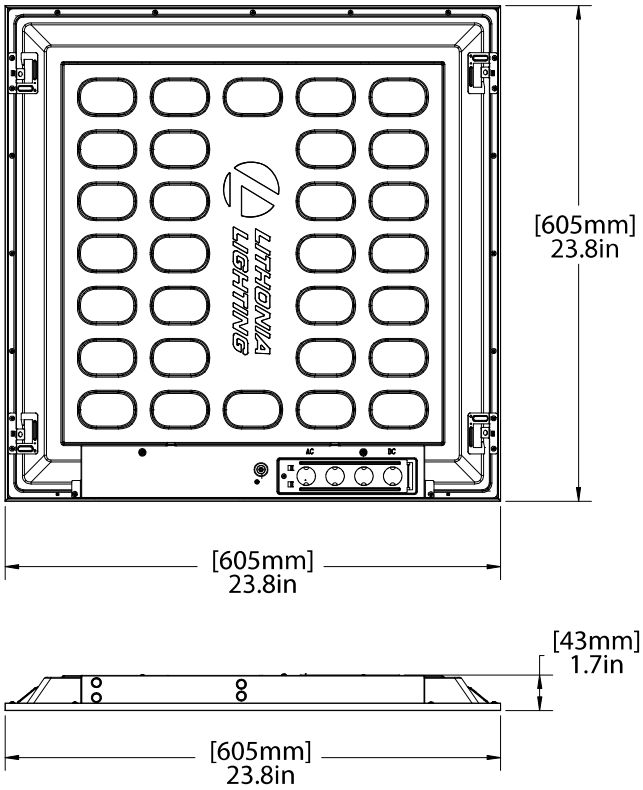

© 2020-2021 Acuity Brands Lighting, Inc. All rights reserved.

DIMENSIONS

Length: 47.8 (121.4)
Width: 23.8" 60.5cm
Depth: 1.7" 4.3CM
Weight:
Unit: 17.05lbs
Unit Carton: 19.05lbs
Master Carton: 36.55lbs

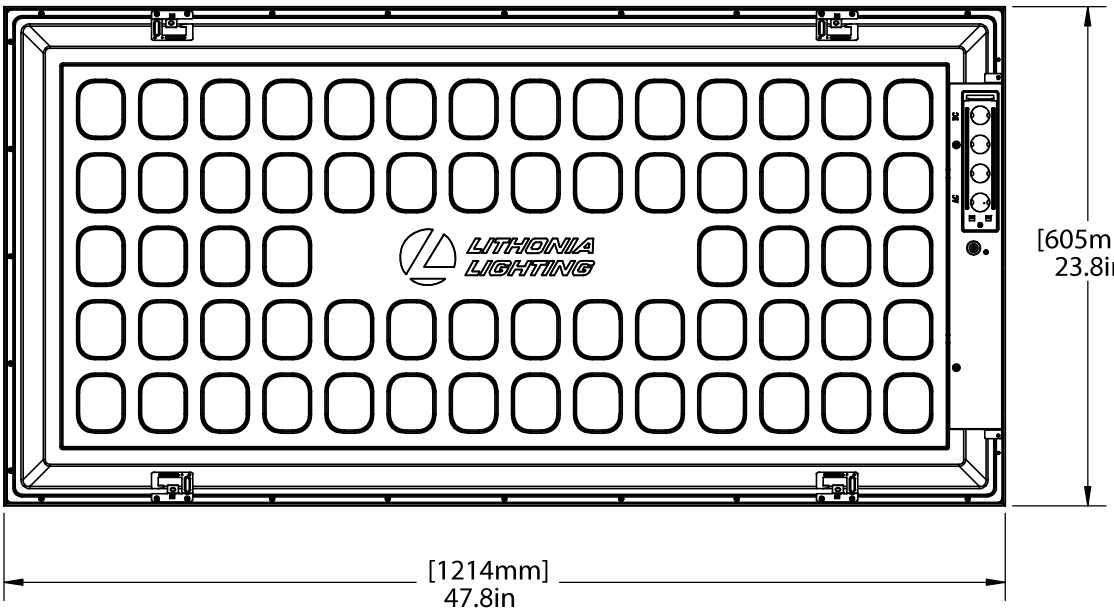

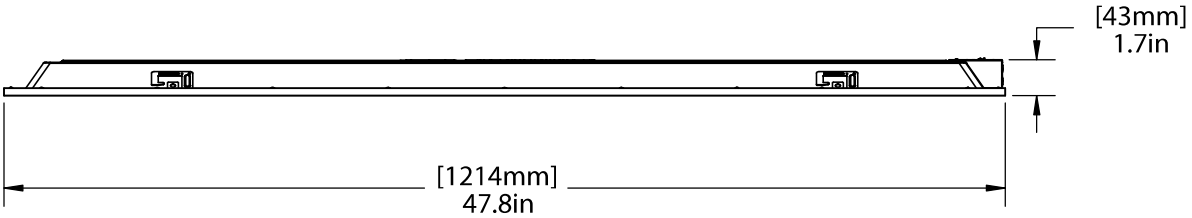

© 2020-2021 Acuity Brands Lighting, Inc. All rights reserved.