SANI-LAV COLUMBIA PRODUCTS

4-Person Hands-Free Wall Mount Stainless Steel Wash Station

Model	Sensor Type	Flow-Rate
58WAL	AC Powered	Standard 2.0 GPM
58WAL-0.5	AC Powered	Low-Flow 0.5 GPM
58WBL	Battery Powered	Standard 2.0 GPM
58WBL-0.5	Battery Powered	Low-Flow 0.5 GPM

LOW-FLOW MODELS • 0.5 GPM FLOW RATE •

Product Specifications

Constructed from welded #16 gauge type 304 stainless steel. The front, bottom and back are formed from a single sheet with a rolled rim on front and sides. Exposed surfaces have a blended uniform satin finish.

Outside Dimensions	80” x 20” x 18” High
Inside Bowl Size	77” x 16-1/2” x 8” Deep
Back Splash Height	10”
Water Activation	AC or ~~Battery Powered Sensor Faucet~~
Flow Rate	2 GPM
Inlet Connections	3/8” Male Compression
Drain Opening	2”
Finish	Satin
Strainer	1-1/2” Dia. Duo Basket Strainer
Wall Mounting Bracket	1/4” Dia. Mounting Holes

Includes

(1) Wall mount wash station
(4) AC or ~~Battery powered sensor faucet assembly~~
(3) Wall-mounting brackets
(2) Support brackets
(4) Mixing check valve
(2) Strainer assembly with basket

Product Compliance

NSF/ANSI 2 Food Equipment
NSF/ANSI 372 Lead-Free Compliant
ASME A112.18.1

NSF

Part: _____ Quantity: _____

Project: _____

Contact: _____

Date: _____

Approval: _____

Notes:

MADE IN USA
of Domestic and Foreign Parts

WARNING: Equipment that include faucets on this page may contain a chemical known to the State of California to cause cancer, birth defects or other reproductive harm.

COLUMBIA PRODUCTS
800.626.2117 ▪ columbiasinks.com ▪ info@columbiasinks.com

©2021 Columbia Products

4-Person Hands-Free Wall Mount Stainless Steel Wash Station
Models 58WAL, 58WAL-0.5, 58WBL and 58WBL-0.5

Top

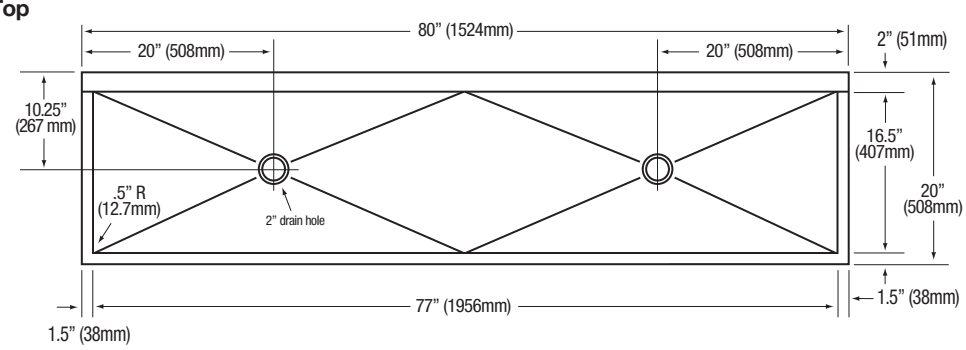

Front

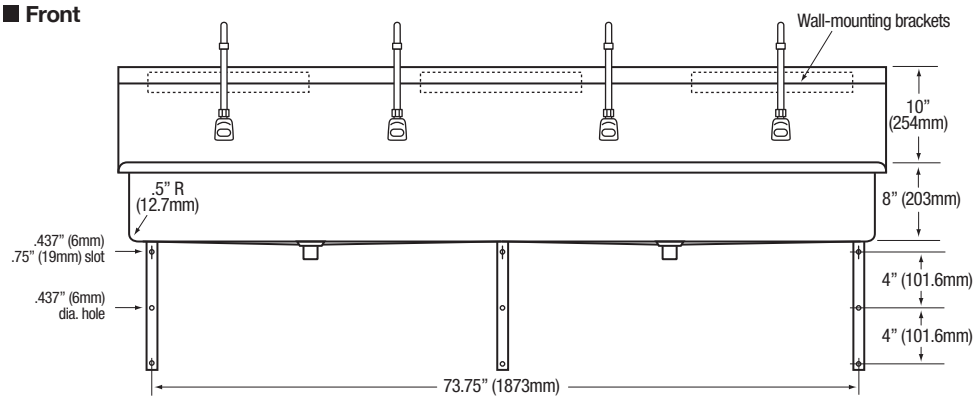

Side

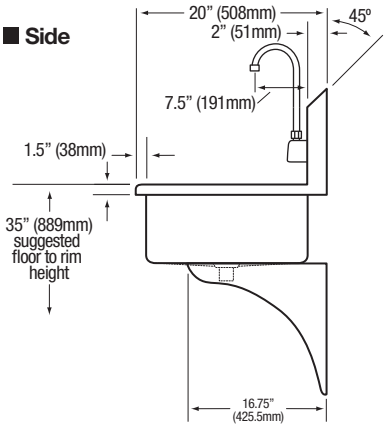

Hole Configurations

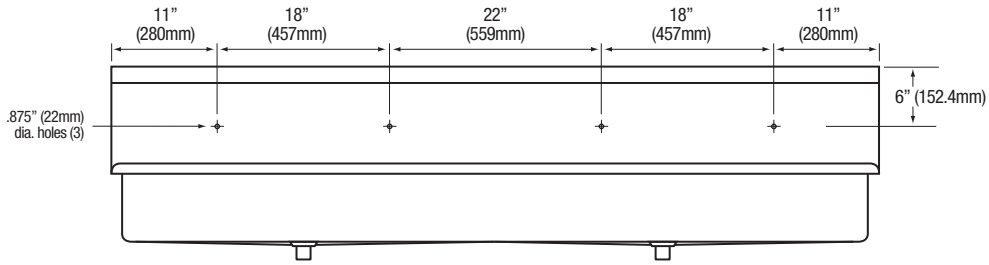

Wall Mounting Detail

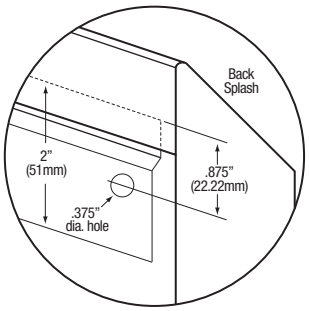

COLUMBIA PRODUCTS
800.626.2117 ▪ columbiasinks.com ▪ info@columbiasinks.com

©2021 Columbia Products

SANI-LAV Sensor Faucets

Wall Mounted AC and Battery Powered
Meets ANSI/ASME A112.18.1 M-1989

ADA Compliant

Operation

1. A continuous, invisible beam is emitted from the sensor.
2. The faucet is activated by placing hands under the spout within the effective range of the beam. Water starts to flow immediately for as long as the user's hands remain in the sensor range.
3. When hands are removed, the water flow stops. The sensor will automatically reset and be ready for the next user.
4. In the battery powered version, a flashing red light will indicate a low battery condition.

Specifications

Faucet Construction	Solid brass, chrome plated
Control Circuit	Solid state, AC or battery, switchable
– Auto. Time-out	Preset at 20 seconds and adjustable to 10, 30, or 60 seconds
– Line Purge (request only)	2 minute run every 12 hours or 24 hours
– Scrub Mode Delay (request only)	60, 120, 180 seconds
– Sensor Range	Preset and adjustable
– Shut-off Delay	Presets and adjustable from 1-8 seconds
Control Cable	Armored, vandal resistant
Solenoid Valve	6V DC, normally closed
– Wattage: 0.4W (idle), 5W (in use)	
– Operating Pressure: 5 psi to 125 psi	
Flow Control	2.0 or 0.5 GPM, Laminar Flow Control

AC Mode

Power Adapter

– Standard Plug-in	Input AC 120V 60 Hz or 220V
– (UL/CSA)	Output DC 12V, 0.8A/Class 2
Power Cable	Armored, vandal resistant
– Optional Multi-Unit Adapter	Serves up to 8 faucets
– (UL/CSA)	Input AC 120V, Output DC 12V, 3A

Battery Mode

Battery Powered Models	(4) AA Alkaline Batteries
Battery Service Life	400,000 on/off cycles, up to 4 years

Package Includes

(1) Faucet with electronic sensor
(1) Control box w/6V DC solenoid
(1) 12V DC plug-in power adaptor (H-6700C, -DC, -LR and -LRDC only)
(1) In-line filter with clean-out trap
(1) 18" Flex, S.S. supply tube, 3/8"(1) 6" Gooseneck Spout
(1) Mounting hardware
(1) 2.0 GPM Flow Control(4) AA Alkaline batteries (HB-6700C, -DC, -LR, -LRDC only)
(1) Battery holder (HB-6700C, -DC, -LR, -LRDC only)

Dimensions

– Base Width (Outside Measurement)	2-1/4"
– Base Depth	2-1/2"
– Faucet Height (Aerator to Base)	8-3/4"
– Faucet Height Overall	12-3/4"
– Depth (Center of Aerator to Center of Faucet Base)	5-3/8"
– Mounting Bolt Length	1-7/16"
– Mounting Bolt Pattern	Single-hole mount

Optional Variations and Accessories

– 0.35, 0.5, 1.5, 2.2 GPM Laminar Flow
– HC-010 Multi-Unit Voltage Adapter (AC Powered Only) - 8 units
– HC-0104 Multi-Unit Voltage Adapter (AC Powered Only) - 4 units
– HC-001 Mixing/Check Valve (Mechanical)
– HBL-04-LR Thermostatic Mixing Valve with Checks (Low Lead)
– 8" deep Gooseneck and 6" or 8" Swing Swing SpoutModel

Model	Sensor Type	Flow-Rate
ES2RL	AC Powered	Standard 2.0 GPM
ES2RL-0.5	AC Powered	Low-Flow 0.5 GPM

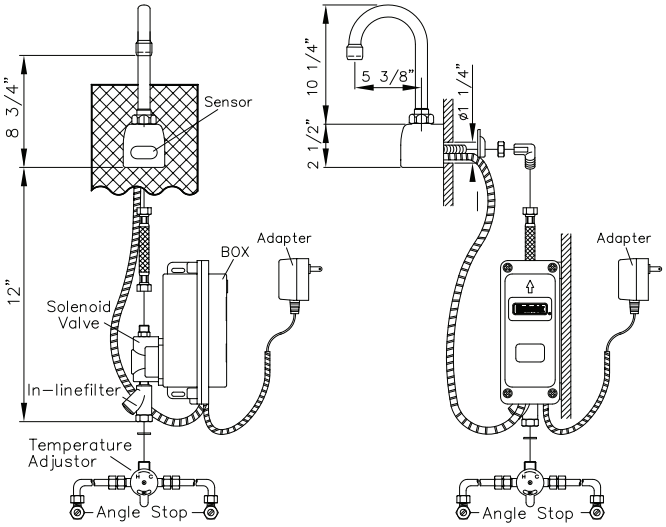

Model	Sensor Type	Flow-Rate
ESB2RL	Battery Powered	Standard 2.0 GPM
ESB2RL-0.5	Battery Powered	Low-Flow 0.5 GPM

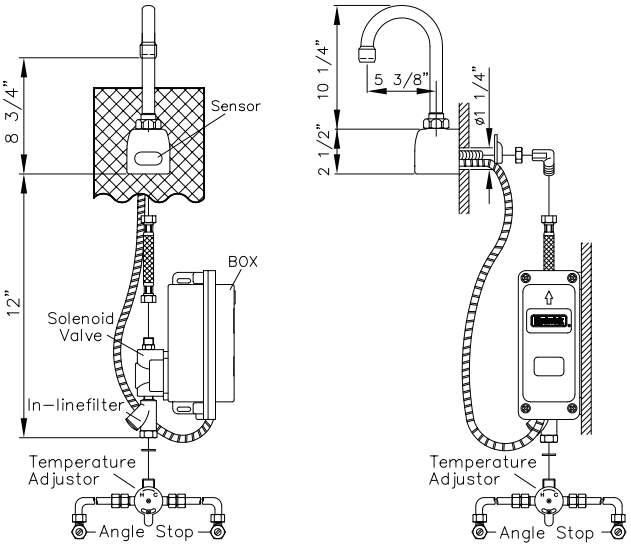

COLUMBIA PRODUCTS
800.626.2117 ▪ columbiasinks.com ▪ info@columbiasinks.com

©2021 Columbia Products